

Workshop Manual

Rolls-Royce Silver Shadow II
Rolls-Royce Silver Wraith II
Rolls-Royce Corniche
Rolls-Royce Camargue
Bentley T2
Bentley Corniche

From car serial number 30001

Volume 1

Printed in England

© Rolls-Royce Motors Limited 1977

T.S.D. 4200 S 168 February 1977

Printed and Published by

Rolls-Royce Motors Limited
Crewe CW1 3PL
Cheshire
England

The information given in this document is based upon the latest knowledge available to Rolls-Royce Motors Limited. However, in view of the Company's continuous programme of product improvement and development, the information may have become out of date by the time you read this publication and reference should be made to the Company's service bulletins.

© Rolls-Royce Motors Limited 1977

Introduction

This workshop manual has been compiled to assist Service Personnel responsible for the maintenance and overhaul of Rolls-Royce Silver Shadow II, Silver Wraith II, Bentley T2, Corniche and Camargue motor cars built from car serial number 30 001.

Information relating to any subsequent modifications will be circulated by the issue of either amended pages or service bulletins.

At the beginning of each chapter is an issue record sheet showing the issue of sections and amended pages. When a section or amended page is issued it will be recorded together with the date of issue. This will provide an up-to-date record of sections and pages.

Service Personnel at Rolls-Royce Motors Limited are always prepared to answer queries or give advice on individual servicing problems. When making an enquiry it is essential that the full car serial number is quoted.

Printed in England

© Rolls-Royce Motors Limited 1979

November 1979

TSD 4200

All communications should be addressed to one of the following depending upon the car's domicile.

Rolls-Royce Motors Limited
Crewe, Cheshire CW1 3PL, England
Telephone: 0270 55155
Telex: 36121
Telegraphic Address: Roycru, Crewe

Rolls-Royce Motors International SA
39 Boulevard de Grancy,
1006 Lausanne, Switzerland
Telephone: Lausanne (021) 275363
Telex: 25001 RRMI
Telegraphic Address: Rollsint Lausanne

Rolls-Royce Motors Inc.
P.O. Box 476, Lyndhurst,
New Jersey 07071, U.S.A.
Telephone: (201) 460 - 9600
Telex: 134427
Telegraphic Address: RRM Inc LYND

Rolls-Royce Motor Cars Limited
3870 Griffith Street, St-Laurent,
Quebec H4T 1A7, Canada
Telephone: (514) 342-4332
Telex: 05/82662

Rolls-Royce Motor Cars Limited
Suite 165, 10551 Shellbridge Way, Richmond, B.C.
V6X 2W8, Canada
Telephone: (604) 278-4724
Telex: 04-355815

Contents

Chapter

A General information
B Special processes
C Automatic air conditioning system
D Lubricants
E Engine
F Propeller shaft
G Hydraulic systems
H Sub-frames and suspension
J Final drive
K Fuel system
L Cooling system
M Electrical system
N Steering system
P Torque tightening figures
Q Exhaust systems
R Wheels and tyres
S Body
T Transmission
U Emission control systems
  Australia
  Japan
  USA & Canada
V Wiring diagrams

© Rolls-Royce Motors Limited 1980

Printed in England

November 1980

TSD 4200

Chapter A

General information

Section

A1 Identification
A2 Precautions
A3 Specification
A4 Data
A5 Body and Coachwork
A6 Special procedures
A7 Abbreviations, Symbols and Terminology
A8 Conversions

Printed in England
© Rolls-Royce Motors Limited 1979

June 1979
TSD 4200

Chapter A

Issue record sheet 1

December 1979

The dates quoted below refer to the issue date of individual pages within this chapter.

Section	A1	A2	A3	A4	A5	A6	A7	A8
Page No.								
1	June 79	June 79	June 79	June 79	June 79	June 79	June 79	June 79
2	June 79	June 79	June 79	June 79	June 79	June 79	June 79	June 79
3		Dec 79	Nov 79	June 79		June 79	June 79	June 79
4		Dec 79	Nov 79	June 79			June 79	June 79
5		Dec 79	June 79					June 79
6			June 79					
7								
8								
9								
10								
11								
12								
13								
14								
15								
16								
17								
18								
19								
20								
21								
22								
23								
24								
25								
26								
27								
28								
29								
30								
31								
32								
33								
34								
35								
36								
37								
38								
39								
40								
41								
42								
43								
44								
45								
46								
47								
48								

Printed in England

© Rolls-Royce Motors Limited 1979

Section A1

Identification

The locations of the various serial numbers quoted in this section indicates their main positions, the numbers may also be found in other places depending upon the specification of the vehicle. In addition, build sequence numbers will usually be found on the majority of main assemblies.

Car serial number

The car serial number contains three prefix letters which define the type of car and a number which indicates the build sequence.

The first letter of the car serial number denotes the body styling.

S - Silver Shadow II
C - Corniche saloon
D - Corniche convertible
L - Silver Wraith II
J - Camargue

The second letter denotes the manufacture.

R - Rolls-Royce B - Bentley

The third letter denotes whether the car is left-hand drive, right-hand drive or the model year.

H - Right-hand drive
X - Left-hand drive (not applicable to cars destined for North America)
F - North America 1977 model year
G - North America 1978 model year
K - North America 1979 model year

Example

Car serial number SRF 30001 denotes a Rolls-Royce Silver Shadow II produced to the North American 1977 model year specification.

On cars other than those destined for U.S.A. and Canada the car serial number is shown on a title plate situated on the left-hand side of the bulkhead (on Camargue cars this plate is attached to the top face of the front right-hand wing valance) and also on the bracket located to the rear of the right-hand front road spring pot (see Fig. A1).

On cars destined for U.S.A. and Canada the car serial number is shown in three positions (see Fig. A2) as follows.

A data plate below the upper hinge of the left-hand front door pillar (on Camargue cars an additional plate bearing the number is attached to the top face of the front right-hand valance).

A plate attached to the windscreen finisher panel, in the bottom corner of the windscreen visible from outside the car.

On the bracket adjacent to the right-hand front road spring pot.

When making any enquiries to Rolls-Royce Motors Limited (or appropriate member of the group) relating to a car, it is essential that the full car serial number is quoted.

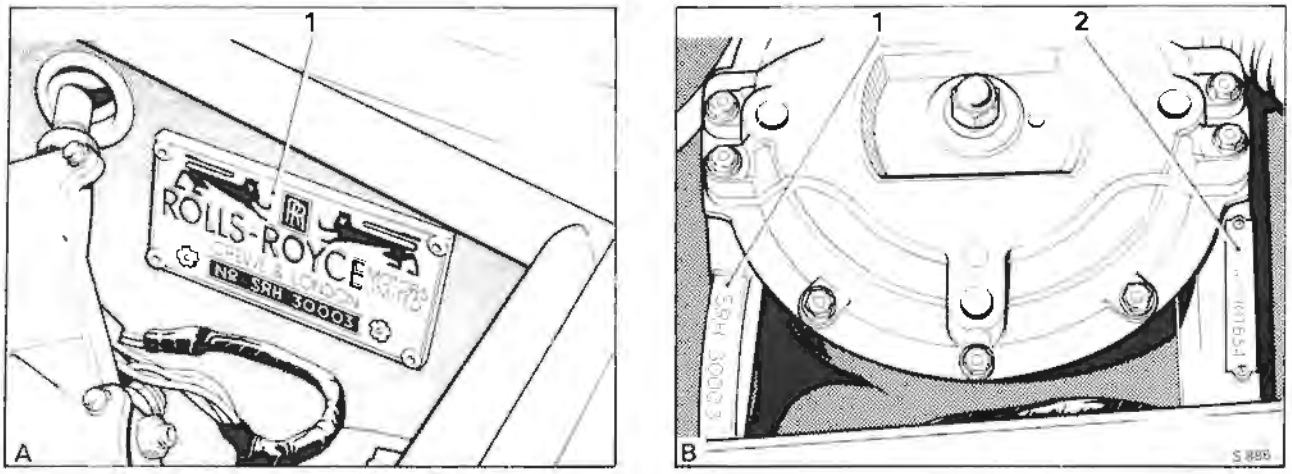

Fig. A1 Positions of the car serial and body numbers (Cars destined for countries other than U.S.A. and Canada)

A Data plate on bulkhead in engine compartment.
1 Car serial number

B Brackets adjacent to right-hand front road spring pot cover.
1 Car serial number
2 Body number (all cars)

Printed in England
© Rolls-Royce Motors Limited 1979

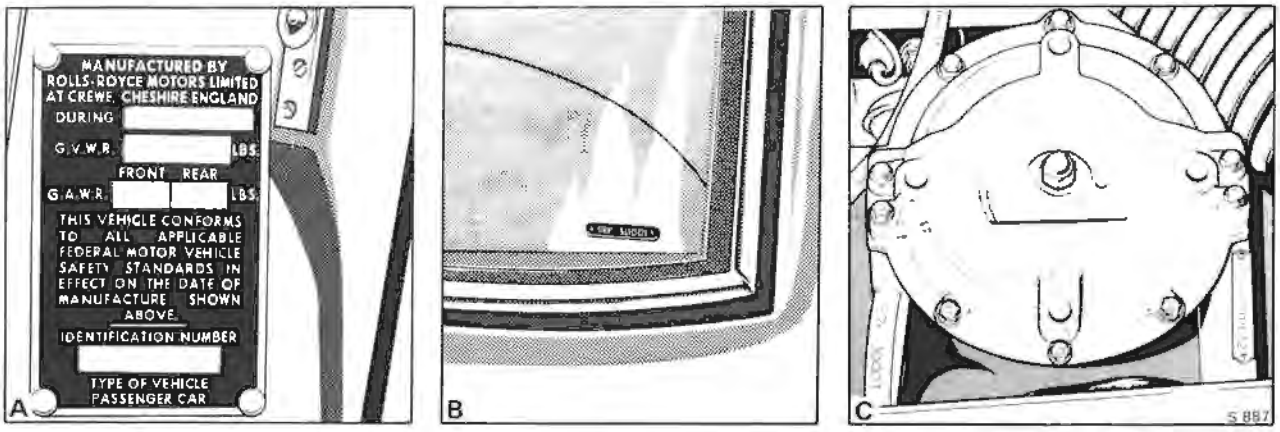

Fig. A2 Positions of the car serial number (Cars destined for U.S.A. and Canada)

A Data plate on driver's door hinge pillar

B Plate on driver's side of windscreen trim

C Bracket adjacent to right-hand front road spring pot cover

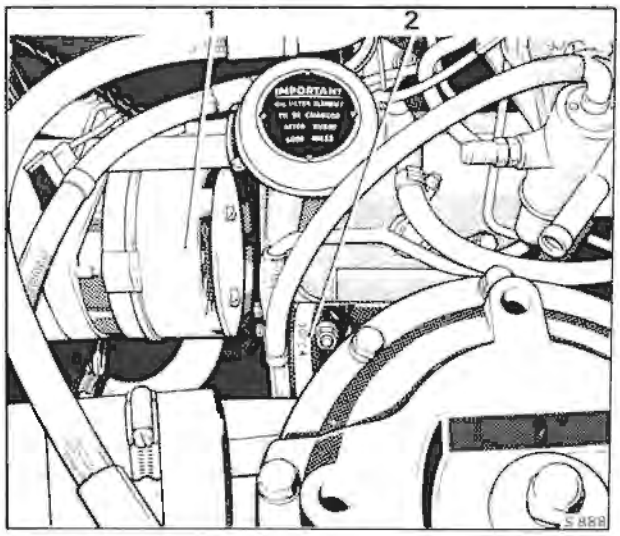

Fig. A3 Position of the engine serial number

1 Alternator

2 Engine serial number

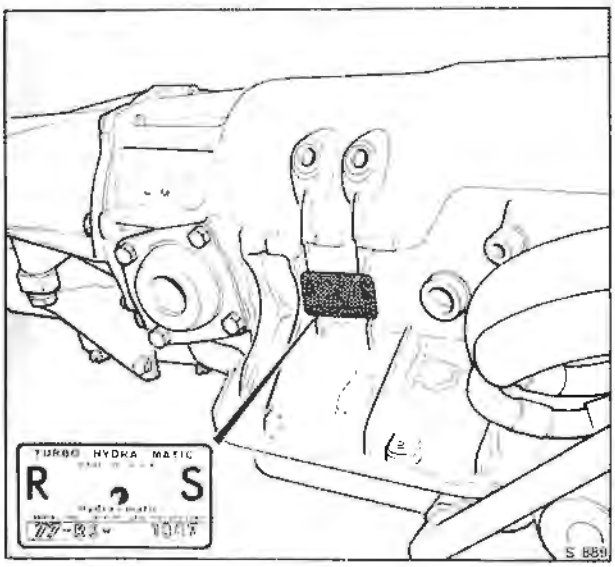

Fig. A4 Position of the transmission serial number

Engine serial number

The engine serial number is stamped on the front of the crankcase as shown in Figure A3.

Transmission serial number

The transmission serial number is located on a metal plate attached to the right-hand side of the transmission casing as shown in Figure A4.

Body serial number

The body serial number is stamped on a metal plate which is attached by two screws to a bracket just forward of the right-hand front road spring pot cover (see Figs. A1 and A2).

Component location

Throughout this manual reference is made to the right-hand and left-hand side of the car, this is determined when sitting in the driver's seat.

In order to identify the two banks of engine cylinders, it should be noted that 'A' bank of cylinders is on the right-hand side and 'B' bank on the left-hand side when viewed from the driver's seat.

Section A2

Precautions



The items in this section identified with the hydraulic system mineral oil symbol relate to Corniche and Camargue cars from serial number 50 001. These cars use hydraulic system mineral oil in the hydraulic systems.

The information contained within this section highlights important notes, warnings and precautions listed elsewhere in this manual. This section should be used as a quick reference guide to any features considered essential for the safety of either the operator or the vehicle.

The list is not exhaustive.

In the interests of health and hygiene, items normally used in service workshops such as anti-freeze, brake fluid, lubricants, adhesives, cleaning agents, etc., should all be treated with extreme caution. As these items can be of a toxic nature they must not be swallowed and contact with the skin must be kept to an absolute minimum.

Towing the vehicle

Before towing the vehicle note the following.
(a) Do not tow the vehicle to start the engine.
(b) Do not tow the vehicle if any mechanical damage to the transmission is suspected.
(c) Do not tow the vehicle with a low fluid level in the torque converter transmission.

Should it be necessary to tow the vehicle for even a short distance a solid tow bar must be used. A speed of 72 k.p.h. (45 m.p.h.) and a maximum distance of 80 kilometres (50 miles) must not be exceeded.

For towing distances in excess of 80 kilometres (50 miles) either disconnect the propeller shaft or transport the car.

Always tow the vehicle with the torque converter transmission in 'Neutral'.

Metric components

A small number of the nuts, bolts and setscrews used in the manufacture of these cars are dimensioned to the metric system, it is important therefore, that when new parts become necessary the correct replacements are obtained and fitted.

Chapter B - Special processes

Re-commissioning after storage

Always ensure that the battery is removed from the car before charging.

Chapter C - Air conditioning

Danger - Exhaust gases

Sitting in the car in a confined space with the engine running is dangerous. Operating the air conditioning unit will increase this danger.

First aid - Refrigerant burns

If the skin is injured by refrigerant it should be bathed with cold water and treated in a similar manner to frostbite.

An eye injured by refrigerant must be immediately washed with clean cold water. The eye must not be rubbed as this will aggravate the injury.

A doctor should be consulted as soon as possible after administering this emergency treatment.

Chapter F - Propeller shaft and Universal joints

Propeller shaft - To remove

The crossmember centre section must not be allowed to hang on the parking brake cables.

Chapter G - Hydraulics

It is of the utmost importance that Service Personnel should fully appreciate that the hydraulic systems operate at high pressures.

The systems are designed to operate safely under normal working conditions, but, when work is performed on the systems, certain precautions must be observed to ensure adequate safety to personnel and equipment.

Cleanliness

To ensure correct functioning of the hydraulic systems it is imperative that meticulous care is taken to ensure complete cleanliness at all times.

Operation of the brakes (engine not running)

The service brakes (i.e. foot brake) consist of two independent all power systems. The power for these systems in the form of hydraulic pressure is provided by two engine driven hydraulic pumps. When the engine stops, a limited reserve of pressure remains stored in the hydraulic accumulators. Due to brake operation, natural internal leakage and height

Printed in England
© Rolls-Royce Motors Limited 1979

control system operation this energy will be slowly depleted. Although a number of brake applications will be available immediately after the engine stops, it is recommended that the service brakes are not utilised when the engine is not running.

Prior to towing the vehicle reference should be made to the relevent section in this chapter.

Precautions before working on the car

Before any work, except bleeding and specified tests, is carried out on the car hydraulics, the systems must be depressurised (refer to Section A5 or Chapter G).

With the exception of bleed screws, components must never be disturbed when the systems are in a pressurised state.

Part 1 - Cars prior to car serial number 50 001
RR 363 Brake fluid

Always refer to Chapter D - Lubricants, for the correct type of fluid to use in the system.

Brake fluid is hygroscopic (i.e. that the fluid will absorb and chemically combine with water from the atmosphere). Brake fluid which is contaminated by water will boil at a much lower temperature.

If the fluid is contaminated by water and the car is braked excessively or very hard from high speeds, there will be a tendency for the heat generated by the brakes to boil the fluid, finally resulting in vaporisation of the brake fluid and ineffective brakes.

To eliminate possible contamination of the brake fluid it is essential that the fluid is not exposed to the atmosphere for more than the absolute minimum of time. It should always be stored in and used direct from small sealed containers and when the systems are replenished, the two reservoir covers and the container cover must be replaced immediately.

Hydraulic accumulator spheres

The hydraulic accumulator spheres are charged on one side of the diaphragm with nitrogen gas through a one-way charging valve in the end of the sphere.

Replacement spheres are supplied in an uncharged state and therefore must be charged by the Franchise holder before they are used to replace existing faulty spheres.

Exchange spheres are supplied complete with a charging valve cap; a warning plate and locking washer are supplied loose. A label is attached which reads 'Uncharged - Remove label on charging and attach warning plate'.

It is of the utmost importance that, when the sphere is charged, the warning plate is fitted below the charging valve cap.

Spheres must never be transported in a charged state. If spheres are to be returned to the Parts Department at Crewe, or transported by rail, air or sea, they must be discharged before despatch.

Service personnel are advised that spare accumulator spheres should be charged and leak tested immediately on receipt and then stored in a charged condition. This ensures that the storage period is utilised as a time/leakage test so that when a sphere is removed from store and the pressure of the nitrogen is tested after fitting, it can be seen whether the sphere is still fully charged with nitrogen.

Spheres which have been correctly charged and successfully leak tested before storage and which then show a loss of pressure in excess of 1,75 kgf/sq.cm. (25 lbf/sq.in.) when tested prior to fitting, must be rejected. The sphere should be recharged and leak tested again to determine the cause of leakage. If the leak persists, the sphere should be discharged and dismantled, the diaphragm checked and renewed if necessary. The displaced components should be returned to the Parts Department at Crewe, with all relevant information.

Storage and transportation

To avoid contamination, it is of the utmost importance that RR 363 brake fluid and hydraulic system mineral oil containers and components are kept completely separate. Conventional brake fluids have a detrimental effect on rubber seals and hoses used in a mineral oil system.

Replacement parts, pipes and units must be correctly and securely sealed with the recommended blanks which must not be removed until immediately prior to fitting. They must also be adequately protected from dust or damage.

Sealing rings and rubber pipes in store should be protected from dust, light and heat.



Part II -
Cars from car serial number 50 001
Hydraulic System Mineral Oil

Always refer to Chapter D - Lubricants, for the correct type of approved hydraulic system mineral oil to use in the system.

Under no circumstances should a conventional synthetic brake fluid be substituted for the genuine hydraulic system mineral oil.

To avoid contamination, all mineral oil containers and components should be stored in a clearly defined area away from that used for conventional brake fluid.

Mineral oil is not hygroscopic (i.e. it will not actively encourage water to enter the system via the hoses and seals) this eliminates the possibility of vapour lock fade, but more important it further reduces internal corrosion on components.

Brake pumps

The hydraulic system mineral oil brake pump differs

from the brake fluid type and no attempt should be made to interchange the parts etc., for further information refer to Chapter G, Section 6m.

Component identification
All components which are susceptible to damage from brake fluid are colour coded **green** and have a **GMF** prefix part number e.g. **GMF 1062.**

Other components which are not susceptible to brake fluid damage (i.e. metal pipes and connectors) are not colour coded and do not have a **GMF** prefix part number. It must be stressed however that these parts must not become contaminated with brake fluid, as this fluid could circulate to other components in the hydraulic systems.

Hydraulic accumulator and gas spring spheres
The accumulator and gas spring spheres are charged on one side of their diaphragms with nitrogen gas prior to despatch from the factory.

Each sphere is marked with a band of white paint or a yellow stick-on label when charged. The charge pressure in 'bars' (i.e. 1 bar=14.5 lbf/sq.in.) is stamped on the non-return valve cap at the lower end of the sphere. It is recommended that spheres are stored and issued from stock in date sequence.

Storage and transportation
To avoid contamination, it is of the utmost importance that RR 363 brake fluid and hydraulic system mineral oil containers and components are kept completely separate. Conventional brake fluids have a detrimental effect on rubber seals and hoses used in a mineral oil system.

Chapter H - Sub-frames and suspension

Urethane foam filled components
The suspension crossmember and final drive cross-member are filled with urethane foam. When using cutting or welding equipment on the crossmembers suitable precautions should be taken not to inhale the toxic gases given off when the temperature exceeds 200° C. (392°F).

Shock dampers
Each shock damper contains nitrogen gas under pressure. On no account should the damper be subjected to undue force of any description. Do not clamp the damper in a vice.

If the spring support has seized onto the damper, renew the shock damper and spring support.

To render a shock damper safe for disposal, drill a small hole 25,40 mm. (1.0 in.) from the closed end of the outer tube. The escaping gas should not be allowed to come into contact with eyes or skin whilst under pressure.

Immediately the hole has been drilled, stand clear and allow the nitrogen gas to disperse to atmosphere.

Front road springs
Use of the road spring retaining tool (RH 8809) should be restricted to a maximum of 200 applications.

Inspection of the long bolt threads must be made at frequent intervals. The person lifting the compressed assembly out of the car must keep their head and body clear of the tool.

Caster and Camber angles
The caster and camber angles must always be checked at the same time, as adjustment of one affects the other.

'Jacking up' the car
Care must be taken not to leave the car jacked up for long periods without support to the trailing arms, otherwise damage may result to the trailing arm mounting points or height control ball pin brackets (see also Page A6 - 2).

When using a hydraulic jack to raise the car ensure that a hardwood block is placed between the jack and the underneath of the car.

The engine front pulley should not be used to support the engine.

Cars from car serial number 50 001
Rear Suspension

Warning
Before any work is carried out on the rear suspension frame tubes etc., reference must be made to the appropriate section in the Workshop Manual.

Chapter K - Fuel system

Fuel - To drain
The fuel is highly inflammable and extreme care must be exercised whenever the system is opened (i.e. pipes disconnected) or when the fuel is drained. The following basic rules should apply.

1. Disconnect the battery leads.
2. Place 'No Smoking' signs in the vicinity of the vehicle.
3. Place a CO2 Fire Extinguisher (or other suitable equivalent) in the vicinity of the vehicle.
4. Safety goggles should be worn at all times by the operator.
5. If fuel is to be drained from the tank, it should be syphoned into a suitable covered container.
6. When draining the fuel system on cars fitted with catalytic converters it is most important that the fuel system is not completely drained by running the engine, otherwise damage to the catalytic converter will result.

Carburetters
SU HIF7 carburetters are set and balanced by

Printed in England
© Rolls-Royce Motors Limited 1979
December 1979
TSD 4200

accurate flow measuring techniques during manufacture and therefore, adjustment of the mixture screws should not be necessary.

SU carburetters - To dismantle
Dismantling of the components within the carburetters is not recommended as all carburetters are set and balanced by accurate flow measuring techniques during manufacture.

SU carburetters - To inspect
When cleaning the inside of the suction chamber and piston rod guide use either fuel or methylated spirit (denatured alcohol) and wipe dry. Abrasives must not be used.

Chapter L - Cooling system

Cooling system - To flush
Under no circumstances use a strong alkaline compound or detergent to clean the cooling system. Such compounds have a detrimental chemical action on aluminium alloys.

Thermostat - To test
Important
If the water is heated too quickly, or if the circulation is poor, a false reading may result.

The thermostat has its opening temperature stamped on the base of the unit, e.g. [80°C. (190°F)].

When fully open, the valve should have travelled a minimum of 9,5 mm. (0.375 in.).

Chapter M - Electrical system

It is important that no 'live' connections or disconnections are made where fuel, fuel vapour or other inflammable materials are present.

The battery must not be connected or disconnected whilst the engine is running.

The engine must be switched off before attempting to disconnect a lead from the charging system.

Always check for correct polarity before fitting a battery.

Whenever a lead is disconnected, it should be identified in relation to its terminal to facilitate reconnection. Short circuiting or reverse polarity no matter how brief, will cause immediate and permanent damage to transistors and diodes.

Radio interference suppressors are fitted to the 'A' terminal of the regulator and to the 'A' and '+' terminal of the alternator. Do not connect suppressors to the 'F' terminal (brown/green lead).

Battery
It is imperative that the negative (earth) lead is disconnected from the battery before commencing work on the electrical system or components, or if any electric arc welding is to be used on the car.

The battery must not be disconnected or connected whilst the alternator is running nor connected into the system without first checking correct polarity.

Battery - To charge
The gases given off during charging are highly inflammable.

Always remove the battery from the car before charging.

Chapter N - Steering system

Rack and pinion unit
Do not strike this unit with a hammer as extreme damage could result.

Belt tension
A slipping belt will squeal and produce judder at the steering wheel nearing full lock. Belt dressing must not be applied to prevent slip.

Steering pump - Priming and filling
When filling an empty system with the engine running, it is essential that at no time the fluid level in the pump reservoir be allowed to drop sufficiently for air to be drawn into the system. If this occurs, irreparable damage to the pump will result.

Chapter R - Wheels and tyres

Tyre to fit
Dunlop tyre bead lubricant TBL1 or TBL2 is recommended for use when fitting valves and tyres. It is most important that soap or other similar agents are not used.

Tyre service
Periodically the balance of each wheel should be checked and corrected if necessary. With the exception of steel braced radial-ply tyres, wheels should not be interchanged to give even tyre wear. For full information refer to Chapter R.

Under no circumstances should any tyres be fitted which have been branded 'Regraded Quality', 'Remould Quality' or 'Seconds', or those which have had the speed rating removed or altered.

Care of tyres
Clean any oil or grease from the tyres using a soap solution and water, then rinse off with clean water. Always remove any oil spillage from the tyres immediately as certain oils, in particular hydraulic system mineral oil, have a harmful effect on the tyre rubber if not cleaned off immediately.

Chapter T - Transmission

Remote gearchange selector contacts
Whenever the moving or fixed contacts have been

disturbed or after the remote gearchange selector has been dismantled and assembled always test the assembly.

Torque converter transmission - To remove
When removing the transmission from the car always use the retaining clamp RH 7952 (J - 21366), otherwise the converter may fall as the transmission is withdrawn.

Chapter U - Emission control systems

Australia, Canada, Japan and U.S.A.

Exhaust emission control system
The exhaust emission control system is designed to reduce the carbon monoxide, unburnt hydrocarbon and oxides of nitrogen content in the exhaust gases.

The system does not eliminate the danger caused by inhaling exhaust gases in a confined area.

Before commencing work on the exhaust emission control system, care should be taken to ensure that the relevant components are not hot.

Unleaded fuel (Canada, Japan and U.S.A.)
Use the correct grade of unleaded fuel only. The use of leaded fuel will result in a substantial reduction in the performance of the catalyst. Under no circumstances add fuel system cleaning agents to either the fuel tank or carburetters for induction into the engine, as these materials may have a detrimental effect on the catalytic converter.

Do not allow the vehicle to run out of fuel. If the vehicle does run out of fuel at a high speed, possible damage to the catalyst could result.

Printed in England
© Rolls-Royce Motors Limited 1979

Section A3

Specification

The items in this section identified with the hydraulic system mineral oil symbol relate to Corniche and Camargue cars from serial number 50 001. These cars use hydraulic system mineral oil in the hydraulic systems.

Braking system

Brake fluid
Cars prior to car serial number 50 001
Castrol RR363 brake fluid. This fluid exceeds current S.A.E. J 1703 specifications in many respects and complies with D.O.T. 3 grade of FMVSS 116.

Hydraulic system mineral oil

Cars from car serial number 50 001
Castrol hydraulic system mineral oil
Refer to Chapter D - Lubricants, for alternatives.

Maximum operating pressure (pump cut-out pressure)
175,77 kgf/sq.cm. (2 500 lbf/sq.in.)
Pump cut-in pressure
126,55 kgf/sq.cm. (1 800 lbf/sq.in.)

Caliper type
Front - Four M 16 calipers
Rear - Two T11/11 calipers

Brake pads
Service (power) - Mintex V 1431
Parking brake - Mintex M 68

Pad area
Service brake
Front - 298,4 sq.cm. (46.25 sq.in.)
Rear - 237,93 sq.cm. (36.88 sq.in.)
Parking brake - 41,03 sq.cm. (6.36 sq.in.)

Swept area
Front - 1 464,51 sq.cm. (227.0 sq.in.)
Rear - 1 603,87 sq.cm. (248.6 sq.in.)
Total - 3 068,38 sq.cm. (475.6 sq.in.)

Disc diameter
27,94 cm. (11 in.) Nominal
28,1 cm. (11.06 in.) - front } Actual
27,7 cm. (10.9 in.) - rear }

Disc width
Front ventilated - 3,18 cm. (1.250 in.)
Rear - 1,27 cm. (0.500 in.)

Capacities	Metric	Imperial	U.S.
Brake and height control system -RR 363 brake fluid	2,55 litres	4½pt.	5½pt.
Hydraulic system mineral oil	4,0 litres	7pt.	8½pt.
Cooling system	16 litres	28½pt.	34¼pt.
Drive-shaft ball and trunnion joint (each)	150 c.c.		
Engine oil sump			
Without changing oil filter	8,4 litres	14¾pt.	17¾pt.
When changing oil filter	9,4 litres	16½pt.	20pt.
Final drive unit	2,55 litres	4½pt.	5½pt.
Fuel tank			
Cars prior to car serial number 50 001			
Cars destined for U.S.A. and Canada	85 litres	18¾gal.	22½gal.
Cars other than those destined for U.S.A. and Canada	107 litres	23½gal.	28gal.
Cars from car serial number 50 001	108 litres	23¾ gal.	28½ gal.
Steering system	0,74 litres	1⅓ pt.	1⅔ pt.
Torque converter			
Transmission (dry)	10,6 litres	18⅔ pt.	22½pt.
When changing fluid in sump only	2,8 litres	5 pt.	6 pt.
When changing fluid in sump and renewing intake strainer	4,5 litres	8 pt.	9½ pt.

Printed in England
© Rolls-Royce Motors Limited 1979
June 1979
TSD 4200

Windscreen washer reservoir
Topping-up level
4,42 cm. (1¾ in.) below the top of the reservoir filler neck.
Approximately 4,8 litres (8½ Imp. pt. 10¼ U.S. pt.)

Dimensions

Wheelbase 3,05 m. (10ft. 0⅛ in.)

Track
Cars prior to car serial number 50 001
Front 1,52 m. (5ft. 0 in.)
Rear 1,51 m. (4ft. 11⅝in.)



Cars from car serial number 50 001
Front 1,52 m.(5ft 0in.)
Rear 1,53 m. (5ft. 0½ in.)

Road clearance 16,5 cm. (6½ in.)

Overall length
Cars destined for countries other than U.S.A. and Canada

Silver Shadow II and Bentley T2	5,196 m. (17ft. 0⅜ in.)
Silver Wraith II	5,298 m. (17ft. 4⅜ in.)
Corniche	5,196 m. (17ft. 0⅜ in.)
Camargue	5,169 m. (16ft. 11½ in.)

Cars destined for U.S.A. and Canada

Silver Shadow II and Bentley T2	5,270 m. (17ft. 3½ in.)
Silver Wraith II	5,372 m. (17ft. 7½ in.)
Corniche	5,270 m. (17ft. 3½ in.)
Camargue	5,240 m. (17ft. 2¼ in.)

Overall width

Silver Shadow II and Bentley T2	1,827 m. (5ft. 11⁵⁄₁₆ in.)
Silver Wraith II	1,827 m. (5ft. 11⁵⁄₁₆ in.)
Corniche	1,836 m. (6ft. 0⅛ in.)
Camargue	1,920 m. (6ft. 3½ in.)

Overall height

Silver Shadow II and Bentley T2	1,518 m. (4ft. 11¾ in.)
Silver Wraith II	1,518 m. (4ft. 11¾ in.)
Corniche	
Convertible	1,518 m. (4ft. 11¾ in.)
Saloon	1,490 m. (4ft. 10¾ in.)
Camargue	1,480 m. (4ft. 10⅜ in.)

Weights

Car unladen but complete with oil, coolant and a full tank of fuel.

Cars destined for countries other than Australia, Canada, Japan and the U.S.A. (Kerbside weight)

Silver Shadow II and Bentley T2	2 235 kg. (4 930 lb.)
Silver Wraith II	
with division	2 385 kg. (5 260 lb.)
without division	2 278 kg. (5 020 lb.)
Corniche	
Convertible	2 360 kg. (5 200 lb.)
Saloon	2 288 kg. (5 045 lb.)
Camargue	2 330 kg. (5 135 lb.)

Cars destined for Australia (Unladen weight)

Silver Shadow II and Bentley T2	2 260 kg. (4 981 lb.)
Silver Wraith II	
with division	2 405 kg. (5 303 lb.)
without division	2 299 kg. (5 031 lb.)
Corniche	
Convertible	2 383 kg. (5 253 lb.)
Saloon	2 316 kg. (5 106 lb.)
Camargue	2 368 kg. (5 221 lb.)

Cars destined for Japan (Kerbside weight)

Silver Shadow II and Bentley T2	2 240 kg. (4 936 lb.)
Silver Wraith II	
with division	2 390 kg. (5 266 lb.)
without division	2 282 kg. (5 031 lb.)
Corniche	
Convertible	2 360 kg. (5 206 lb.)
Saloon	2 290 kg. (5 051 lb.)
Camargue	2 347 kg.(5 175 lb.)

Cars destined for U.S.A. and Canada (Kerb weight)

Silver Shadow II and Bentley T2	2 266 kg. (4 995 lb.)
Silver Wraith II	
with division	2 413 kg. (5 320 lb.)
without division	2 284 kg. (5 035 lb.)
Corniche	
Convertible	2 381 kg. (5 250 lb.)
Saloon	2 285 kg. (5 060 lb.)
Camargue	2 340 kg. (5 160 lb.)

Electrical system

Alternator (C.A.V.)
AC5B/12/53

Alternator control (C.A.V.)
Model 440 type 546

Battery (Negative earth)
Cars destined for countries other than U.S.A. and Canada
Make and type - Chloride 369

Voltage - 12V

Capacity - 71 ampere hour at 20 hour rating

Cars destined for U.S.A. and Canada
Make and type - Lucas Pacemaker CP13/11

Voltage - 12V

Capacity - 68 ampere hour at 20 hour rating

Horns
Right-hand - Mixo high note TR 129
Left-hand - Mixo low note TR 129

Ignition timing (97 R.O.N. Minimum fuel)
Cars destined for countries other than Australia, Canada, Japan and the U.S.A.
S.U.HIF 7 carburetters - 25°B.T.D.C. at 1 300 r.p.m.
Solex 4A1 carburetter -
Cars prior to car serial number 50 001
15°B.T.D.C. at 1 200 r.p.m.
Cars from car serial number 50 001
25°B.T.D.C. at 1 850 r.p.m.
Cars where 97 R.O.N. (Minimum) fuel is not available reference must be made to Chapter M - Section M3

Cars destined for Australia, Canada, Japan and the U.S.A.
S.U. HIF 7 carburetters - 15° B.T.D.C. at 1 200 r.p.m.

Ignition coil
Cars destined for countries other than Australia, Canada, Japan and the U.S.A.
Make and type - Lucas 22 C12 negative earth with ballast resistance.

Cars destined for Australia, Canada, Japan and the U.S.A.
Make and type - Lucas 23 C12 negative earth with ballast resistance

Radio interference
Suppressor; condenser on positive '+' terminal - 2 mfd

Ignition distributor
Make and type - Lucas 35 DE8 Opus

Rotation - Anti-clockwise, viewed from the top

Advance mechanism - Automatic centrifugal advance

Firing order - A1, B1, A4, B4, B2, A3, B3, A2. 'A' bank is on the right when viewed from the driver's seat

Dwell angle - 33° to 39° at 1 000 r.p.m.

Drive - Through camshaft skew gears

Radio receiver
Cars destined for countries other than U.S.A. and Canada
Bosch 'Frankfurt' Stereo - Long, Medium, Short and F.M. wavebands

Cars destined for U.S.A. and Canada
Bosch 'Frankfurt' U.S. Stereo - A.M. and F.M. wavebands

Sparking plugs
Make and type - Champion RN.14Y.

Gap setting
Cars destined for countries other than Australia, Canada, Japan and the U.S.A.
0,76 mm. (0.030 in.)

Cars destined for Australia, Canada, Japan and the U.S.A.
0,89 mm. (0.035 in.)

Starter motor
Make and type - Lucas M45G (23 slot)

Stereo tape play unit
Pioneer QP 444 eight track four channel

Windscreen wipers
On cars other than Camargue, two 35,6 cm. (14 in.) wiper blades operated by a two speed 16W permanent magnet motor.

On Camargue, two 45,7 cm. (18 in.) wiper blades operated by a two speed 17W permanent magnet motor.

Engine

Type
Over square 90° formation

Number of cylinders
Eight in two banks of four

Bore
10,41 cm. (4.1 in.)

Stroke
9,91 cm. (3.9 in.)

Total capacity
6,75 litres (411.9 cu.in.)

Compression ratio
8:1 or 7.3:1 according to the car's domicile

Engine and transmission mounting points
The engine and transmission are flexible mounted on rubber at three points, single mounting at the front, two at the rear

Camshaft
Material - Alloy cast-iron

Printed in England
© Rolls-Royce Motors Limited 1979
November 1979
TSD 4200

Bearings - Surface machined in crankcase

Thrust taken - On front end

Drive - Through helical gears

Connecting rods
The connecting rods are 'H' section forgings and are balanced before fitting to the engine

Material Chrome molybdenum steel

Big-end bearings - Split steel backed shells lined with 20% tin aluminium

Small-end bushes - Pressed into connecting rod small-end bosses

Material - Lead-bronze, steel backed

Crankshaft
Dynamically balanced two-plane crankshaft with four crankpins and bolted on balance weights

Material - Chrome molybdenum steel. Nitride hardened

Damping - Bonded rubber vibration damper

Direction of rotation - Clockwise (when viewed from front of engine)

Cylinder block
Type - Monobloc casting

Material - Cast aluminium alloy

Cylinder heads
Two detachable heads, each having four separate inlet and exhaust ports

Material - Aluminium alloy, with phosphor bronze exhaust valve guides, cast-iron inlet valve guides and valve seat inserts of alloy cast-iron

Cylinder liners
Type - Detachable wet liners
Material - Cast iron

Main bearings
The main bearings have split steel backed shells lined with 20% tin aluminium

Pistons
The pistons are full skirt type with off-set gudgeon pins. The crown of the pistons differ to give a compression ratio of either 7.3:1 or 8:1 dependent upon the car's intended domicile

Material - Aluminium alloy

Number of rings - Two compression rings and one oil control ring

Valve gear
Inlet valves - Overhead push rod operated. Single spring with steel collets, seals attached to collets control valve stem lubrication

Material - Alloy steel

Exhaust valves - Overhead push rod operated. Single spring with steel collets, seals attached to collets control valve stem lubrication

Material - Austenitic steel with stellite tip and valve seat

Tappets - The engine is fitted with self-adjusting hydraulic tappets. The base of the tappets have a spherical radius

Material - Alloy cast-iron

Push rods - The push rods are hollow and have hardened spherical ends

Lubrication system
Type - wet sump

High pressure supply - 2,6 kgf/sq.cm. (37 lbf/sq.in.) at 1 000 r.p.m.

Relief valve - 2,8 kgf/sq.cm. (40 lbf/sq.in.)

Oil pump - Helical gear type with fine mesh strainer pick-up

Oil filter - Sealed disposable type; full flow with filter by-pass relief valve

Cooling system
Type - Solid coolant system

Pump type - Centrifugal

Pump drive - Adjustable twin 'Vee' belt

Radiator matrix type - Tube and fin construction

Fans - a) Located to the rear of the radiator. Viscous drive coupling with 7 blade 50,8 cm. (20 in.) diameter plastic fan.
b) Located forward of the radiator. Electrically operated 30,5 cm. (12 in.) diameter plastic booster fan with 7 blades

Coolant temperature controlled by thermostat-opening temperature - 85° C. to 89° C. (185° F. to 192° F.)

System pressurised at 1,05 kgf/sq.cm. (15 lbf/sq.in.)

Fuel system

Air filter and silencer
Type - Paper element

Carburetters
SU. carburetters and air intake
Type - Twin SU. HIF 7. 4,76 cm.(1⅞ in.) bore side draught. Under wing air silencer/cleaner with paper filter element

Solex carburetter and air intake
Type - Solex 4A1. Four barrel, two stage down-draught carburetter. Pan type air silencer/cleaner with paper element and twin trumpet intakes

Fuel cooler
Fitted to cars destined for Canada, Japan and the U.S.A.

Fuel pump
Cars destined for countries other than Canada, Japan and the U.S.A.
Twin S.U. electric

Cars destined for Canada, Japan and the U.S.A.
Single Pierburg rotary vane electric (check valve mounted forward of pump)

Fuel tank
Cars prior to car serial number 50 001
Cars destined for countries other than U.S.A. and Canada.
Located under luggage compartment floor

Cars destined for U.S.A. and Canada and cars from car serial number 50 001

Located behind the trim panel at the forward end of the luggage compartment

Fuel recirculation system
Cars destined for Canada, Japan and the U.S.A. are fitted with a system to recirculate unwanted fuel from the carburetters via a recirculation valve to the fuel tank

Fuel filters
Rear fuel filter - disposable element
Fuel pump internal filters - no maintenance required (S.U. fuel pumps)
Fuel pump internal filter - no maintenance required (Pierburg fuel pump)
Carburetter intake connections - disposable element

Fuel guage
Facia mounted, electrically operated.

Fuel grade
Cars destined for countries other than Canada, Japan and the U.S.A. 97 octane (minimum) 4 star where BS 4040 is applicable

Cars destined for Japan
Unleaded fuel only (88 R.O.N. min.)

Cars destined for U.S.A. and Canada
Unleaded fuel only (91 R.O.N. min.)

Steering and Suspension

Automatic height control system
Maximum working pressure
Pump cut-out pressure
Pump cut-in pressure
See braking system on page A3 - 1

Steering
Type - Power assisted, rotary valve, integral rack and pinion steering with centre off-take

Turns of steering wheel lock to lock
3.25

Front and rear hubs
Taper roller bearings

Front wheels steering geimetry
Camber (in degrees) - 0.5°±15′ negative

Kingpin inclination (in degrees) - 11·5°

Caster (in degrees) - 2°30′ to 3°30′ positive

Toe-in (in degrees) - 12′±5′

Turning angle of inner steered wheel for 20°turn of outer steered wheel
21°6′

Rear wheels geometry
Cars prior to car serial number 50 001
Camber - Zero to - ¼°

Toe-in (in degrees) - Zero to 12′
(both unsprung - non-adjustable with car in show-room condition)

Cars from car serial number 50 001
Unloaded sub-frame settings, removed from car mounted on setting jig.
Camber (in degrees) - 0°±15′
maximum difference in Camber across the subframe 15′
Total Toe-in (in degrees) - 28′±4′

Printed in England
© Rolls-Royce Motors Limited 1979
June 1979
TSD 4200

Diameter of steering wheel
All cars 38,8 cm. (15.3 in.)
Note
Corniche (prior to DRH 32633) and Camargue (prior to JRX 32035) have a steering wheel diameter of 40,1 cm. (15.8 in.)

Turning circle

Silver Shadow II, Bentley T2, Corniche and Camargue	*a) 11,65 m. (38.22ft.) *c) 6,90 m. (22.63ft.)
Silver Wraith II	*a) 12,11 m. (39.72ft.) *c) 7,31 m. (23.98ft.)

*These are approximate dimensions for turning circle in either direction in accordance with I.S.O. Recommendation R612 dated August 1967 where:
a) diameter of circle swept by centre of front outer steered wheel and
c) diameter of circle swept by centre of rear inner driven wheel.

Transmission

Final drive unit and drive-shafts
Crown wheel teeth - 40

Bevel pinion teeth - 13

Final drive unit ratio - 3.08:1

Top gear speed per 1 000 r.p.m. - 42,3 k.p.h. (26.3 m.p.h.)

Overall gear ratios - 7.70:1, 4.62:1, 3.08:1 - forward 6.16:1 - reverse

Final drive unit - Hypoid bevel

Torque converter transmission
Type - Automatic torque converter

Make - General Motors Turbohydramatic Model 400 - 3-speed

Converter gear ratios - 2.5:1, 1.5:1, 1.0:1 - forward 2.0:1 - reverse

Gear change - Electrically operated - steering column mounted selector

Transmission lock - Engaged when selector is in 'Park' position or when ignition key is removed from switchbox

Exhaust system

Make - Rolls-Royce

Type - Twin pipe balanced system

Silencers - Cars destined for countries other than Canada, Japan and the U.S.A. - Six

Cars destined for Canada, Japan and the U.S.A. - Four (plus two catalytic converter assemblies)

Wheels and tyres

Wheels
Rim - 6JK x 15 Flat ledge

Type - Disc - pressed steel

Fixing - 5 stud - Right-hand wheel nuts have right-hand threads; left-hand wheel nuts have left-hand threads

Tyres
HR70 HR15 (235/70 HR15) radial-ply tyres.
On certain cars destined for U.S.A. and Canada, Michelin Wide x HR70 - 15 tyres may be fitted

Recommended tyre inflation pressures cold - Refer to Chapter R - Wheels and tyres

Section A4

Data

The items in this section identified with the hydraulic system mineral oil symbol relate to Corniche and Camargue cars from serial number 50 001. These cars use hydraulic system mineral oil in the hydraulic systems.

Automatic air conditioning system

The automatic air conditioning system supplies hot, warm, cool or cold air to the interior of the car.

Air temperature (blend) flaps form the basis of the automatic air conditioning system as they are operated by an electro-mechanical servo mechanism controlled by an electronic circuit. These circuits are fed with air temperature information from certain parts of the car and, acting on this information drive the servos so that the air temperature (blend) flaps are moved into the correct positions to achieve the required in-car air temperature. The upper and lower systems operate independently, each system having its own set of air temperature sensors, air temperature selector, servo and servo electronics.

The system is operated by three switch controls situated on the facia.

The control marked AIR CONDITIONER has five positions and enables three automatic positions or a defrost position to be selected. The system can be switched off by turning the control to the OFF position.

The switch control marked UPPER TEMP controls the air temperature in the upper part of the car; the switch control marked LOWER TEMP controls the air temperature in the lower part of the car.

Mode override switch

From car serial numbers

Silver Shadow II	-	34573
Silver Wraith II	-	34601
Bentley T2	-	34775
Corniche Saloon	-	34830
Corniche Convertible	-	33029

A control switch is provided to override the automatic mode of the upper system air. The switch is marked 'AUTO' and 'FACIA' and is situated on the lower facia panel adjacent to the temperature selector controls, the only exception being Camargue cars where the control switch is situated adjacent to the passenger's air conditioning facia outlet.

Automatic height control system

Cars prior to car serial number 50 001

The system is a fully automatic hydraulic system and maintains the riding height of the car regardless of loading.

When the gear range selector lever is in any position except 'Neutral' or 'Park' the system is on slow levelling. When 'Neutral' or 'Park' is selected the system changes to fast levelling.

The system is operated by fluid, supplied under pressure from an engine driven pump and pressure accumulator and is controlled by two rear height control valves.

Cars from car serial number 50 001

The mineral oil hydraulic system has only one rate of levelling and each side of the car is completely independent of the other.

Hydraulic levelling is achieved by using suspension struts in conjuction with gas springs. Alterations to the vehicle weight are supported by the gas springs and the height control is effected by pumping extra oil (under pressure from the accumulators) into the gas spring and strut assemblies.

Automatic speed control system

The controls for the automatic speed control systems are fitted to the end of the gear range selector lever. The regulator and bellows servo are mounted in the engine compartment.

Any cruising speed over 48 k.p.h. (30 m.p.h.) and up to 137 k.p.h. (85 m.p.h.) can be selected to give satisfactory operation of the automatic speed control system.

This system only operates when the vehicle is in top gear.

Body

The car body is steel and is of a monocoque construction. The doors, luggage compartment lid and bonnet are made of light alloy, combining lightness with strength and rigidity. The under-frame and body shell are welded together.

Printed in England
© Rolls-Royce Motors Limited 1979
June 1979
TSD 4200

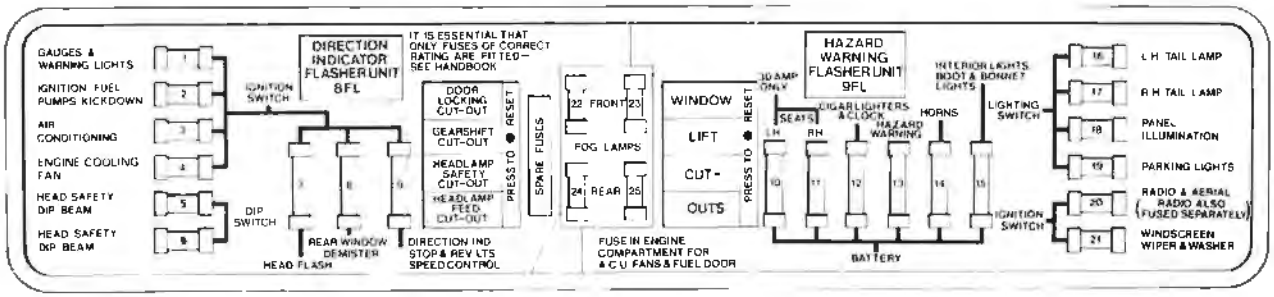

Fig. **A5** Typical fuseboard layout

Braking system

Pressurised brake fluid or mineral oil is supplied from two camshaft driven pumps and fed into two hydraulic accumulators. Power pressure is metered out to the brakes by two distribution valves actuated by the brake pedal operation.

Braking units

Discs front (ventilated) and rear; two double cylinder calipers on each front wheel and one four cylinder caliper on each rear wheel.

Service (power) brake

Two entirely independent hydraulic systems, each separately powered. Each system operates one of two individual disc brake caliper assemblies on each front wheel and one of two individual pairs of pistons and pads, housed in a single disc brake caliper assembly, on each rear wheel.

Parking brake

Separate mechanically controlled calipers are attached to service brake calipers at each rear wheel. Parking brake operation is by hand on right-hand drive cars and by foot pedal application with separate hand release on left-hand drive cars.

Electrical system

Alternator control

The alternator control unit is located in the luggage compartment adjacent to the battery. It is a transistorised unit with a printed base circuit; it varies the alternator field current in order to maintain the stator output voltage within close limits. It is a sealed unit and cannot be adjusted.

Note

Two temperature sensing switches are included in the voltage regulator circuit. These switches control the charge rate in accordance with the battery temperature.

Exterior lamps

Four headlamps are fitted and operate whenever the main lighting switch is turned to the HEAD position. The headlamps contain either sealed beam units or bulbs dependent upon the car's domicile. The two inner lamps provide long range illumination. The two outer lamps provide short range 'flood' illumination. When switched to main beam all four headlamps are illuminated. The two inner lamps are extinguished when the headlamps are dipped.

A small warning lamp situated on the facia illuminates when the headlamps are switched to main beam.

For certain countries twin front and rear fog lamps are fitted.

The side, tail, side marker, rear number plate and 'tell tale' lamps situated at the forward edge of each front wing (Camargue only) illuminate whenever the main lighting switch is moved from the OFF position.

If the main lighting switch is moved from the OFF position and the direction indicator is operated the respective cornering lamp will illuminate (Camargue only).

On cars destined for Italy, the 'tell tale' lamps will also operate in synchronism with the direction indicator lamps.

Interior lamps

Interior roof lamps and floor illumination lamps are fitted and illuminate whenever the doors are opened or the appropriate switch is operated.

The lamp mounted in the roof of the luggage compartment illuminates automatically whenever the luggage compartment lid is raised. Similarly, the bonnet lamp illuminates whenever the bonnet lid is raised.

A list of bulbs, headlamp bulbs and sealed beam units is shown in Chapter M.

Fuseboard

On cars other than Camargue the fuseboard is situated in the lower facia (knee roll) below the stowage compartment. Access is gained by anti-clockwise rotation of the two quick release clips that secure the fuseboard compartment cover in position. Lower the cover to reveal the fuseboard.

The fuseboard identification plate is visible when the lid is lowered (see Fig. A5).

On Camargue cars the fuseboard is situated below the floor of the facia stowage compartment. Access is gained by opening the compartment door, pulling in the sides of the compartment and then lifting up the floor.

The fuseboard identification plate is visible when the stowage compartment floor is raised (see Fig. A5).

Windscreen washer reservoir
The reservoir is located under the left-hand front wing and the filler cap is positioned on the reservoir header tank in the engine compartment.

Operation of the washer is controlled by a switch situated in the end of the direction indicator lever. If the switch is depressed with the ignition on with a low fluid level in the reservoir, the warning panel marked WASHER FLUID will illuminate.

Windscreen wipers
Operation of the wipers is controlled by a switch on the facia marked WIPERS. The switch has two clockwise positions and one anti-clockwise position. The first clockwise position provides wiping at the normal speed, the second position increases the speed. The anti-clockwise position provides intermittent operation, giving one complete wipe at approximately seven second intervals.

Engine

Lubrication system
The engine oil from the sump is circulated by a gear type pump mounted on the front of the crankcase and driven by the crankshaft through skew gears.

High pressure oil is fed to the crankshaft, big-end bearings, camshaft bearings and timing gear, tappets, push rods and rocker ball end seatings. An intermittent feed supplies oil through the front camshaft bearing to the rocker shafts, rocker arms and valve tips. The connecting rod small-ends, gudgeon pins and cylinder walls are lubricated by a splash feed.

Cooling system
The engine cooling system comprises a matrix, a separate header (expansion) tank and a centrifugal pump. The pump is driven by the crankshaft through twin matched belts. The header tank is mounted separately above the radiator to reduce aeration in the system by separating the circulating coolant from the air space.

Cooling system corrosion and freeze protection
50% mixture with water giving frost protection down to a temperature of - 36.5°C. (-33.7°F.).

Coolant inhibitor
Approved inhibitor SQ 36. 89c.c. (3 fluid oz.) of the concentrate should be added to each 4,5 litres (1 Imperial gallon, 1.2 U.S. gallons) of water.

Specific gravity of coolant
The coolant should be checked for 50% anti-freeze/water mixture with a hydrometer. To give a 50% mixture at room temperature the specific gravity should be between 1.060 and 1.070.

Emission control systems
Refer to the appropriate 'model year' within Chapter U.

Front and rear hubs
The front hubs are mounted onto the yoke stub axle. The rear hubs are mounted on hollow stub axles connected to the final drive unit by universal couplings and drive-shafts.

Fuel filler door
Operation: Depress button on facia. Manually operated release in luggage compartment.

Power assisted steering
Power assisted steering with energy absorbing collapsible steering column is fitted. The steering unit, which is a rack and pinion arrangment with centre off-take, is supplied with hydraulic fluid under pressure by an engine driven pump. The fluid feed line incorporates an anti-joggle valve and a fluid cooler is fitted into the return line.

Sub-frames
Cars prior to car serial number 50 001
The front sub-frame manufactured from welded sheet steel is mounted on rubber mounts to the car underframe.

The rear sub-frame manufactured from welded sheet steel is mounted to the body underframe using resilient metal mounts.



Cars from car serial number 50 001
The front sub-frame manufactured from welded sheet steel is mounted on rubber mounts to the car underframe.

The rear sub-frame is mounted to the car body at its four corners by cylindrical rubber mounts. These mounts have a horizontal axis in a fore and aft direction.

Suspension
Cars prior to car serial number 50 001
The compliant front suspension is an independent

Printed in England
© Rolls-Royce Motors Limited 1979
June 1979
TSD 4200

coil spring arrangement with double acting hydraulic shock dampers, an anti-roll stabiliser bar and a compliance rod, all of which are attached to the front sub-frame.

The rear suspension is an independent coil spring arrangement with trailing arms, double acting hydraulic shock dampers and an anti-roll stabiliser bar, the trailing arms are pivoted on the rear sub-frame.



Cars from car serial number 50 001

The rear suspension is an independent coil spring arrangement with trailing arms, suspension struts and anti-roll bar. The trailing arms are pivoted on the rear suspension crossmember. Suspension struts are attached to extension brackets on the rear ends of the trailing arms.

Transmission

Final drive unit and drive-shafts

Cars prior to car serial number 50 001

The final drive unit is rigidly mounted on a cross-member which is attached to the body underframe by two rubber mounts. A torque arm flexibly mounted between the rear crossmember and the rear sub-frame absorbs the torque reaction at the crownwheel in the final drive unit.

The final drive unit casing contains hypoid bevel gears. Drive is transmitted to the rear wheels by two drive-shafts; the inner end of each shaft is connected by a ball and trunnion joint and the outer end by a universal coupling.



Cars from serial number 50 001

The final drive unit is mounted onto a crossmember which forms part of the rear sub-frame. Bolt on extension brackets connect the final drive cross-member to rubber mounts attached to the body under-floor. The rear suspension crossmember is attached to the final drive crossmember by six frame tubes and a torque arm.

The final drive unit comprises a centre differential gearbox which contains the hypoid crownwheel, pinion gears, a differential housing and two drive-shafts which transmit the drive to the rear wheels. The ball and trunnion joint on each side of the final drive unit is enclosed by a convoluted neoprene seal to prevent dirt and water entering the joint and to prevent oil leakage.

Propeller shaft

The single piece propeller shaft incorporates a resonance damper. The shaft is connected to the torque converter transmission output shaft flange and to the final drive input flange by universal joints.

The propeller shaft assembly is dynamically balanced to fine limits.

Torque converter transmission

The torque converter transmission transmits the drive automatically in three forward ranges and reverse. Gear changes are made automatically and are obtained through a three element hydraulic torque converter and a compound planetary gear train. A parking lock incorporated in the torque converter transmission operates when the gear range selector lever is moved to the 'Park' position or when the ignition key is removed from the switch-box.

Section A5

Body and Coachwork

Printed in England

Bonnet fasteners
If the bonnet fasteners become stiff due to an accumulation of dirt on the mechanism, they should be cleaned and lightly oiled.

Care of paintwork
During service, the paintwork is subjected to variable climatic and atmospheric conditions which cause deterioration. This deterioration, referred to as weathering, occurs gradually and is generally manifested by a reduction of gloss and a tendency, with certain colours, to show rain spot marks.

In order to maintain the paintwork in good condition, the following procedure is recommended.

Always wash paintwork with clean, preferably running, cold water. Do not use excessive pressure from the hose. Start at the top of the car and work down using clean sponges and chamois leathers; reserve one sponge and one leather for body panels. The edges of the window frames, door joints and the air conditioning intake grilles should not be exposed to the full force of the water from the hose. Paintwork should never be washed in bright sunlight or when the bodywork is hot.

When leathering water off the car, the chamois leather should be frequently washed out in clean cold water and any surplus water wrung out before use. Also, sponge and leather all window frames and door edges. Finally, clean all the windows inside and out, lower the electrically operated windows sufficiently to clean the portion normally covered by the upper window channels.

Under no circumstances should any attempt be made to remove dirt, mud or dust when dry.
This practice can produce serious scratching, requiring professional repair.

Automatic car washes are not recommended. The detergents used and the washing action may stain or damage the paintwork, windows or radiator shell.

Road tar can be removed by gently rubbing with a soft cloth moistened with turpentine substitute.

Approximately every three months, after normal cleaning with cold water, paintwork should be restored by application of a suitable cleaner/polish. In certain climatic conditions where longer periods of sunshine prevail, more cleaning/polishing may be necessary.

Polishing should not be carried out in bright sunlight or when the bodywork is hot.

Do not polish the car in a dusty or gritty atmosphere.

It is not sufficient merely to apply a wax polish as a build-up of wax can induce its own type of rain spotting or discolouration. A good quality friction emulsion cleaner/polish should therefore be applied. Slight discolouration on the polishing cloth when carrying out this process will be evident. A good quality siliconised wax polish should then be applied to provide a weatherproof lustre.

If regular maintainance polishing is not carried out, the original gloss will become obscured and rain spotting may reach objectional proportions. Paintwork should therefore be polished as soon as the gloss begins to fade, not when it has already become dull.

Carpets and headlining
Carpets should periodically be swept with a vacuum cleaner.

Stains or grease marks may be removed from carpets and headlining by means of a mild detergent diluted with clean water, taking care not to over-wet the carpets or headlining.

Cloth upholstery
Cloth upholstery should be cleaned by first brushing the soiled area to remove any loose particles of dirt.

The affected area should then be cleaned with a good quality carpet shampoo used in accordance with the makers instructions or alternatively, use a solution of synthetic detergent and lukewarm water, taking care not to over-wet the upholstery.

Wipe over with a clean cloth and allow the upholstery to dry off naturally.

De-icing fluid
If a de-icing fluid is used on the exterior of windows, the instruction on the container should be strictly observed. Undiluted de-icing fluid should not be allowed to come into contact with the paintwork or with the windscreen wiper blades, and if it does, the fluid should be wiped off as quickly as possible.

Door hinges and locks
The door hinges incorporate Oilite bushes and stainless steel hinge pins and should not be lubricated. The application of oil may result in damage by causing dirt to adhere to the working surfaces.

© Rolls-Royce Motors Limited 1979

June 1979

TSD 4200

The working surfaces of the door slam plates should be wiped clean occasionally, then smeared with a small quantity of grease.

Lambskin and nylon rugs
The rugs should be cleaned by removing them from the car and shaking off any loose dirt.

Impregnated or congealed dirt such as mud should be removed by using a solution comprising a light domestic type soap mixed with lukewarm water.

Immerse a cloth into the solution and lightly wring out. Clean an area of approximately 0,1 sq.m. (1.0 sq.ft.) taking care not to over-wet the rug, then wipe over with a second dry cloth. Repeat this procedure over the remaining area of the rug.

Allow the rugs to dry before returning them to the car.

If the rugs have oil or grease marks they should be sent to a specialist who operates a full cleaning service.

Interior woodwork
Interior woodwork should be cleaned with a damp cloth, then dried with a clean dry cloth. Water should never be allowed to lie upon interior woodwork.

Leather upholstery
Leather upholstery should be cleaned by wiping over with a damp cloth. The occasional application of a little neutral soap will remove more obstinate marks. Caustic soap, petrol or other similar cleansing agents should not be used. An occasional application of Connolly's Hide Food will preserve the upholstery; this compound should be applied evenly with a clean cloth, then polished with a second clean dry cloth.

Plating
Stainless steel and chromium plating should be wiped clean with a damp chamois leather, then polished with a soft cloth. **Under no circumstances should a metal polish be applied.** Where tarnishing has occured a dilute solution of ammonia will usually suffice to remove it. This solution must not be allowed to lie upon paintwork for any length of time.

Power operated hood
To avoid creasing the hood material it is advisable to always erect the hood when the car is immobile for any length of time.

Everflex roof material
If the Everflex material becomes ingrained with dirt, wash the roofing material with a solution of water and mild detergent, such as Teepol. It may be necessary to work the detergent into the material with a soft bristled brush. Brush in a fore-aft direction along the line of the stitching, not across the material. Afterwards, wash using clean cold water.

Under no circumstances should chemical solvents, polishes or detergents (other than those specified) be applied to the Everflex material.

A special vinyl top dressing preparation is applied to protect the Everflex roof material prior to delivery. Further applications may be required at approximately 18 month intervals. This vinyl top dressing is available from the Parts Department at Rolls-Royce Motors Limited, Crewe.

Section A6

Special procedures

Printed in England

© Rolls-Royce Motors Limited 1979

The items in this section identified with the hydraulic system mineral oil symbol relate to Corniche and Camargue cars from serial number 50 001. These cars use hydraulic system mineral oil in the hydraulic systems.

Heli-coil inserts

Heli-coil inserts are used on various aluminium parts of the engine. They offer a far greater resistance to wear, stripping, seizing and corrosion than direct type threads.

Heli-coils have been used only where the parts are secured by setscrews, not where studs are fitted.

The Heli-coil inserts are made of stainless steel wire and can therefore be easily identified when fitted into their aluminium components.

Heli-coil insert - To remove (see Fig. A6)

1. Fit the blade of the Heli-coil insert extraction tool into the top of the threaded insert.
2. Press downwards onto the insert and then turn the blade anti-clockwise; the insert should then wind out of the hole.
3. Examine the condition of the threads in the hole from which the Heli-coil was removed. If necessary rectify any damage by using a special Heli-coil insert tap.

Heli-coil insert - To fit

As it is necessary to remove the tang from the end of the Heli-coil insert after fitting, it is important to ensure that the insert tang is notched.

Using the Heli-coil insertion tool shown in Figure A7 proceed as follows.

1. Withdraw the mandrel from the threaded nozzle and loading chamber.
2. Fit the insert into the chamber with the tang end positioned towards the nozzle.
3. Slide the mandrel through the insert and engage the tang into the slot.
4. Turn the handle clockwise, applying gentle pressure on the insert until it is located into the nozzle.
5. Continue turning until the first coil of the insert just emerges from the nozzle.
6. Fit the insertion tool over the tapped hole ensuring that it is square to the work face.

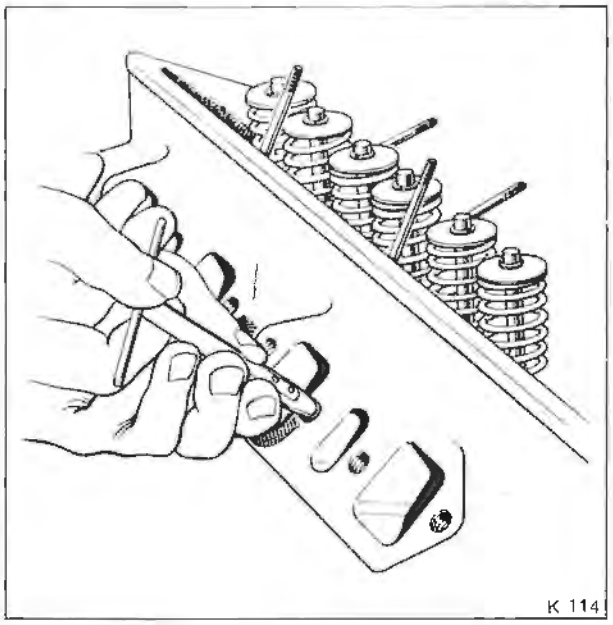

Fig. A6 Heli-coil extraction tool

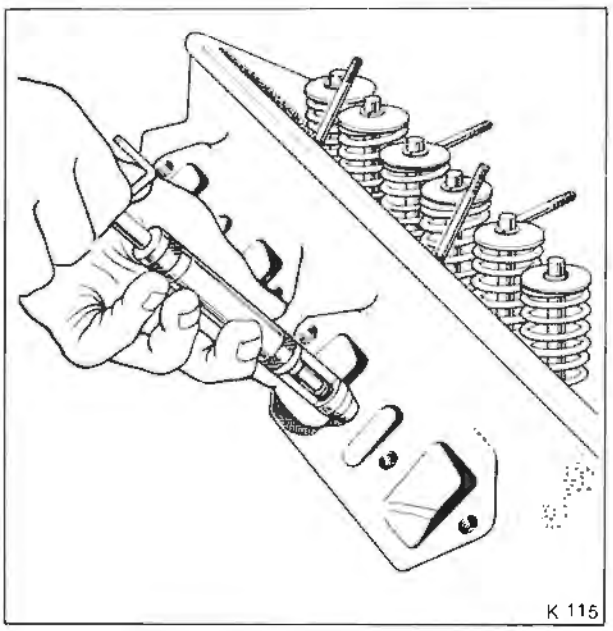

Fig. A7 Heli-coil insertion tool

7. Commence winding until the insert is transferred from the nozzle to the tapped hole. Do not apply any pressure during this operation

8. The Heli-coil insert is finally fitted when the coil is between ¼ and ½ a pitch below the surface of the work face.
9. Fit the special tang break off tool (punch) into the insert as shown in Figure A8.
10. Allow the innerpiece of the punch to slide downward to locate on to the tang.
11. Apply a sharp tap to the end of the punch so that the tang breaks off at the notch.
12. Ensure that the tang does not fall into any part of the engine etc. where it could cause damage.

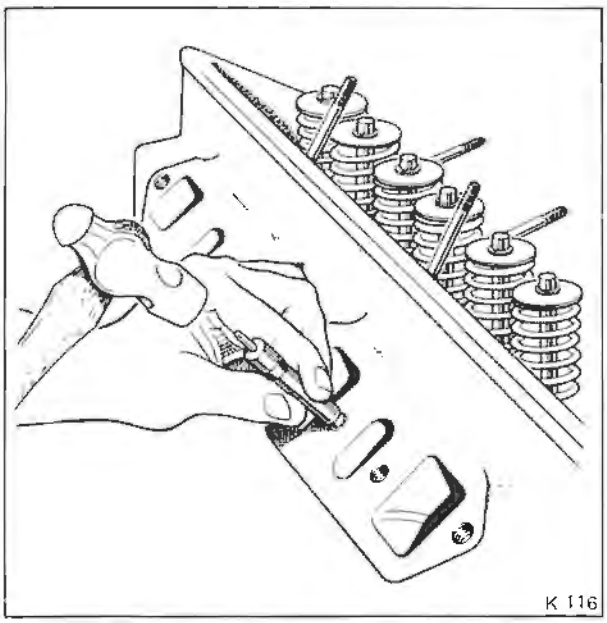

Fig. A8 Heli-coil tang 'break-off' tool

Hydraulic systems to depressurise

Cars prior to car serial number 50 001
Either of the two following methods may be employed to depressurise the systems but generally it will be found that the first is the more convenient.

Method 1
Switch on the ignition with the gearchange selector in 'Neutral' (i.e. fast height control conditions) but do not start the engine, then pump the brake pedal 50 to 60 times until both hydraulic warning lamps on the instrument panel are illuminated and remain illuminated.

On cars destined for Australia, Canada and the U.S.A. it will be necessary to pump the brake pedal an extra 30 times after the warning panels have illuminated to ensure that the system is completely depressurised.

Afterwards, switch off the ignition.

Depressurise the height control rams by placing a bleed tube on each ram bleed screw in turn, opening the screws and bleeding off the fluid into a clean container.

After each ram has been depressurised the bleed screw must be tightened and the reservoir topped-up to replace that fluid bled off.

If the work on the system required the removal of hydralic pipes or components, disconnect the battery which is located in the luggage compartment.

Method 2
With the ignition switched off, place a length of bleed tube over the bleed screw in the accumulator valve body and immerse and hold the free end in a clean container.

Open the bleed screw slightly and bleed until fluid no longer flows from the accumulator. The bleed screw should only be opened fractionally otherwise the accumulator pressure will force the tube off the bleed screw.

Close the bleed screw, remove the tube and repeat the operation for the other accumulator.

Repeat the procedure for evacuating the height control rams, as given under Method 1.



Cars from car serial number 50 001

Method 1
Switch on the ignition and pump the brake pedal 50 to 60 times until both hydraulic warning lamps on the instrument panel are illuminated and remain illuminated.
Switch off the ignition.

To depressurise the rear suspension struts, place a bleed tube to each strut bleed screw in turn, open the bleed screws and allow the hydraulic mineral oil to bleed into a clean container until the flow ceases.

Method 2
With the ignition switched off, open the bleed screw on both accumulators and allow sufficient time for the mineral oil pressure to discharge back to the reservoir.

These bleed screws are an intergral part of the accumulator, the mineral oil being allowed to flow from the accumulator sphere back to the reservoir when the bleed screw is opened. Switch on the ignition and check that the warning lamps marked 1BRAKE PRESSURE and 2 BRAKE PRESSURE on the instrument panel are illuminated.

Depressurise the rear suspension struts as described in Method 1.

Jacking up the car

This can be achieved in two ways; the car can be raised using either the car jack or a trolley jack.

Normally, one jacking point is provided on either side of the vehicle for the car jack (Camargue

has two jacking points), however, other suitable jacking points for a trolley jack or similar equipment are as follows.
Front - The front pivot mounting for the lower triangle levers on the sub-frame.
Rear - Either the centre of the final drive casing (not on the final drive crossmember) or on the base of the coil spring seat of the trailing arms, taking care not to damage the parking brake linkage.

Note

1. When using a hydraulic jack to raise the car ensure that a hardwood block is placed between the jack and the underneath of the car.

2. Immediately a car is raised and before commencing any work, it is recommended that vehicle support stands or blocks are placed in suitable positions beneath the car.

Printed in England

© Rolls-Royce Motors Limited 1979

Section A7

Abbreviations, Symbols and Terminology

The items in this section identified with the hydraulic system mineral oil symbol relate to Corniche and Camargue cars from car serial number 50 001. These cars use hydraulic system mineral oil in the hydraulic systems.

This section gives details of the abbreviations and symbols used throughout this Workshop Manual with the exception of the Electrical System (which has specialised abbreviations and symbols that can be found at the beginning of Chapter M).

A list containing the interpretation of specialised motor engineering terminology is also included in this section.

Abbreviations

Across flats	A/F
After bottom dead centre	ABDC
After top dead centre	ATDC
Before bottom dead centre	BBDC
Before top dead centre	BTDC
Bottom dead centre	BDC
Brake horse-power	bhp
Brake mean effective pressure	bmep
British standards	BS
Carbon monoxide	CO
Centigrade (Celsius)	C.
Centimetre	cm
Countersunk	C/S
Cubic centimetre	cc
Cubic inch	cu in
Degree (angle)	deg or °
Degree (centigrade)	°C
Degree (fahrenheit)	°F
Diameter	dia
Fahrenheit	F.
Feet	ft
Feet per minute	ft/min
Gallon (Imperial)	gal
Gallon (U.S.)	US gal
Gramme (force)	gf
Gramme (mass)	g
Grammes per square centimetre	g/sq cm
Horse power	hp
Hundredweight	cwt
Inch	in
Inches of mercury	in Hg
Kilogramme (force)	kgf
Kilogramme (mass)	kg
Kilogramme centimetre (torque)	kgf cm
Kilogramme metre (torque)	kgf m
Kilogrammes per square centimetre	kgf/sq cm
Kilometres	km
Kilometres per hour	kph
Litres	l
Maximum	max
Metre	m
Miles per gallon	mpg
Miles per hour	mph
Millimetres	mm
Millimetres of mercury	mm Hg
Minute (angle)	′
Number	No
Ounce (force)	ozf
Ounce (mass)	oz
Part Number	Part No.
Percentage	%
Pints (Imperial)	pt
Pints (U.S.)	US pt
Pound (force)	lbf
Pound (mass)	lb
Pound feet (torque)	lbf ft
Pounds per square inch	lbf/sq in
Ratio	.
Revolutions per minute	rpm
Society of Automobile Engineers	SAE
Square centimetres	sq cm
Square inch	sq in
Square metre	sq m
Standard	Std
Standard wire gauge	swg

Printed in England

© Rolls-Royce Motors Limited 1979

June 1979

TSD 4200

Thread formations	
British Standard Whitworth	BSW or Whit
American, pipe, taper, fuel (dry-seal)	NPTF
Unified coarse	UNC
Unified fine	UNF
Metric	M
Top dead centre	TDC

Terminology

Allen key
Cranked wrench of hexagonal section for use with socket head screws.

Alternator
Electrical generator producing alternating current. Rectified to direct current for battery charging.

Ambient temperature
Surrounding temperature.

Ampere hours
Refers to battery capacity (current x hours it flows).

Annulus
Used in engineering to indicate the outer ring gear of an epicyclic gear train.

Armature
The shaft carrying the windings, which rotates in the magnetic field of a generator or starter motor. That part of a solenoid or relay which is activated by the magnetic field.

Automatic choke
For cold starting,enriches fuel/air mixture by reducing air supply.

Axial
In line with or pertaining to an axis.

Backlash
Play in meshing gears.

Bevel pinion
A conical shaped gearwheel, designed to mesh with a similar gear with an axis usually at 90 deg to its own.

Brake caliper
Cylinders with hydraulic operated pistons acting on brake pads.

Brake disc
Steel disc rotating with wheel. Operation of brake pedal causes two friction pads to squeeze disc and reduce speed.

Brake horse-power (bhp)
Horse-power available at the flywheel, usually measured on a dynamometer.

Brake mean effective pressure (bmep)
Average pressure on a piston during the working stroke.

Camber
Angle at which a wheel is tilted from the vertical when viewed from the front or rear of the car.

Camshaft
Revolving shaft with eccentric projections to operate valve mechanism and hydraulic systems pumps.

Capacitor
Term for an electrical condenser. Part of a distributor assembly. Also acts as an interference suppressor.

Carburetters
Atomise fuel by mixing it with air in varying proportions to suit engine operation conditions.

Castellated
Top face of a nut, slotted across the flats, to take a locking split-pin.

Caster
Angle at which the kingpin or swivel-pin is tilted when viewed from the side of the car.

cc
Engine capacity is derived by multiplying the area of the bore (sq.cm. by the stroke cm.) by the number of cylinders (i.e. swept volume x number of cylinders).

Choke stove pipe
A 'U'-shaped pipe assembly situated in 'B' bank exhaust manifold. (Air from the engine intake elbow passes to the choke stove pipe assembly where it is heated by the exhaust gases. The heated air is then drawn back into the induction system via the choke heat sink, where heat is transferred from the air to the choke bi-metal coil).

Clevis
'U'-shaped fork connector used with a clevis pin.

Clevis pin
A pin that is used to secure components within the fork type of clevis connector; usually retained by a split pin.

Collet
A type of collar, split and located in a groove in a shaft, and held in place by a retainer. The arrangement usually used to retain the spring on a valve stem.

Commutator
Rotating segmented current distributor between armature windings and brushes in generator or motor.

Compression ratio
Ratio of volume above piston at bottom of stroke and top of stroke.

Crankshaft
Converts vertical movement of the pistons into rotary motion.

Crownwheel
Large bevel gear in rear axle, driven by a bevel pinion attached to the propeller shaft.

Demister
Directs heated air over screen to clear internal condensation. The system will also melt frost on the outside of the windscreen.

Depression
The lowering of atmospheric pressure (as in the inlet manifold and carburetter).

Dowel
Close tolerance pin, peg, tube, or bolt, which accurately locates mating parts.

Electrode
Terminal, part of an electrical component, such as the points or 'Electrodes' of a sparking plug.

Electrolyte
In lead-acid car batteries a solution of sulphuric acid and distilled water.

End float
The axial movement between associated parts, end play.

Engine cylinder
Bore in the engine crankcase is sleeved with a wet cylinder liner. Piston operates within the cylinder/liner.

EP
Extreme pressure. In lubricants, special grades for heavily loaded bearing surfaces, such as the crownwheel and pinion assembly in the final drive unit.

Field coils
Windings on the polepieces of electric motors.

Fillets
Narrow finishing strips usually applied to interior bodywork.

Full flow filter
Filter in which all the oil is pumped to the engine. If the element becomes clogged, a by-pass valve operates to pass unfiltered oil to the engine.



Gas spring
A sphere, half filled with nitrogen gas (above a diaphragm), part of the suspension strut.

Gear pump
Two meshing gears in a close fitting casing. Oil is carried from the inlet round the outside of both gears in the spaces between the gear teeth and casing to the outlet, the meshing gear teeth prevent oil passing back to the inlet, and the oil is forced through the outlet port.

Gear ratio
Relative speeds at which two gears revolve. If the input gear rotates twice as fast as the output one, the gear ratio is 2:1.

Grommet
A ring of protective or sealing material. Can be used to protect pipes or leads passing through deviding partitions.

Gudgeon pin
Shaft which connects a piston to its connecting rod.

Helical
Inspiral form. The teeth of helical gears are cut at a spiral angle to the side faces of the gearwheel.

Hot spot
Hot area that assists vapourisation of fuel on its way to cylinders.

HT
High Tension. Applied to the secondary voltage produced by the ignition coil for the sparking plugs.

Hydrometer
A device for checking specific gravity of liquids. Used to check specific gravity of electrolyte or coolant.

Hypoid bevel gears
A form of bevel gear used in the rear axle drive gears. The bevel pinion meshes below the centre line of the crownwheel, giving a lower propeller shaft line.

Impeller
A centrifugal pumping element. Used in coolant pumps to stimulate flow.

Printed in England
© Rolls-Royce Motors Limited 1979
June 1979
TSD 4200

Journals
Those parts of a shaft that are in contact with the bearings.

Laminated glass
Two thin sheets of glass bonded one to each side of a thin sheet of transparent plastic, giving good resistance to shattering and penetration.

lbf.ft.
A measure of twist or torque. A pull of 10lbf. at a radius of 1 ft. is a torque of 10 lbf.ft.

LT
Low Tension. The voltage output from the battery.

Mandrel
Accurately manufactured bar or rod used for test or centring purposes.

Manifold
A pipe, duct, or chamber, with several branches.

Needle rollers
Bearing rollers with a length many times their diameter.

Overall gear ratio
Number of engine revs per revolution of the driving wheels (gearbox ratio x final drive ratio).

Overlap
Period during which inlet and exhaust valves are open together.

Parking pawl
Pivoted catch that engages in the gear ring on the transmission rear unit planet carrier.

Phillips/Pozidriv screwdriver
A cross-point screwdriver for use with the cross-slotted heads of Phillips/Pozidriv screws.

Pinion
A small gear, usually in relation to another gear.

Pre-loading
Pre-set static pressure on ball or roller bearings not due to working loads.

Radial-ply tyres
Refers to the construction of the tyres because the cords of the plies are at right angles to the rim.

Shock absorber
Damper to control body movement in relation to the suspension preventing continuous bouncing on the springs.

Small-end
The small, or piston end of a connecting rod. Sometimes called the 'little-end'.



Strut
Integral damper and height control ram. Damping achieved by displacement of hydraulic system mineral oil under pressure from the gas spring.

Thermostat
In cooling system prevents coolant circulating to the radiator until the engine has warmed up.

Toeboard socket
A toeboard socket provides a convenient junction box for electrical connections between the engine compartment and car interior.

Torque
Mean turning effort exerted on crankshaft by pistons, available for propelling the car.

Wet liner
Engine cylinder liner fitted into the crankcase bore and sealed top and bottom thus allowing engine coolant to circulate directly onto the liner. Should excessive wear take place a new liner can be installed.

Woodruff key
A semi-circular piece of metal that fits into a similar shaped slot on a shaft. The flat edge of the key protrudes out from the shaft and locates in a groove in the internal bore of a gear thus accurate location of the gear to the shaft is obtained.

Section A8

Conversions

Conversion factors

Millimetres to Inches x 0.0394
Inches to Millimetres x 25.4
Centimetres to Inches x 0.394
Inches to Centimetres x 2.540
Metres to Feet x 3.281
Feet to Metres x 0.305
Metres to Yards x 1.094
Yards to Metres x 0.914
Kilometres to Miles x 0.621
Miles to Kilometres x 1.609
Square millimetres to Square inches x 0.0015
Square inches to Square millimetres x 645.16
Square centimetres to Square inches x 0.155
Square inches to Square centimetres x 6.452
Square metres to Square feet x 10.764
Square feet to Square metres x 0.093
Cubic centimetres to Cubic inches x 0.061
Cubic inches to Cubic centimetres x 16.387
Cubic metres to Cubic feet x 35.315
Cubic feet to Cubic metres x 0.028
Cubic metres to Cubic yards x 1.308
Cubic yards to Cubic metres x 0.765
Grammes to Ounces (Avoir) x 0.035
Ounces (Avoir) to Grammes x 28.35
Kilogrammes to Pounds (Avoir) x 2.205
Pounds (Avoir) to Kilogrammes x 0.454
Kilogrammes to Hundredweights (cwt) x 0.019
Hundredweights (cwt) to Kilogrammes x 50.802
Metric tonnes to Imperial tons x 0.984
Imperial tons to Metric tonnes x 1.01604
Imperial tons to Kilogrammes x 1016
Imperial gallons to U.S. gallons x 1.201
U.S. gallons to Imperial gallons x 0.833
Litres to Imperial gallons x 0.220
Imperial gallons to Litres x 4.546
Litres to U.S. gallons x 0.264
U.S. gallons to Litres x 3.785
lbf.ft. to kgf.m. x 0.1382
kgf.m. to lbf.ft. x 7.233
bar to lbf/sq.in. x 14.5

Kilometres per litre to Miles per Imperial gallon x 2.825

Miles per Imperial gallon to Kilometres per litre x 0.354

Kilometres per litre to Miles per U.S. gallon x 2.352

Miles per U.S. gallon to Kilometres per litre x 0.425

Kilograms per sq.cm. to Pounds per sq.in. x 14.223

Pounds per sq.in. to Kilogrammes per sq.cm. x 0.070

Miles per Imperial gallon to Litres per 100 kilometres $= \frac{282.473}{\text{miles per Imp. gal.}}$

Litres per 100 kilometres to Miles per Imperial gal. $= \frac{282.473}{\text{litres per 100 km.}}$

Degrees Centigrade to Degrees Fahrenheit $= \frac{^{o}\text{C.} \times 9}{5} + 32$

Degrees Fahrenheit to Degrees Centigrade $= \frac{(^{o}\text{F.} - 32) \times 5}{9}$

Printed in England
© Rolls-Royce Motors Limited 1979

Metric to Imperial

Volume			Area				Liquid		
cu m to cu yard	cu m to cu feet	cu cm to cu in	sq metre to sq yard	sq metre to sq feet	sq cm to sq in	**Metric Value**	milli litre to fluid ounce	litre to pint	litre to gal
1.3	35.3	0.06	1.20	10.76	0.16	**1**	0.04	1.76	0.22
2.6	70.6	0.12	2.39	21.53	0.31	**2**	0.07	3.52	0.44
3.9	105.9	0.18	3.59	32.29	0.47	**3**	0.11	5.28	0.66
5.2	141.3	0.24	4.78	43.06	0.62	**4**	0.14	7.04	0.88
6.5	176.6	0.31	5.98	53.82	0.78	**5**	0.18	8.80	1.10
7.8	211.9	0.37	7.18	64.58	0.93	**6**	0.21	10.56	1.32
9.1	247.2	0.43	8.37	75.35	1.09	**7**	0.25	12.32	1.54
10.5	282.5	0.49	9.57	86.11	1.24	**8**	0.28	14.08	1.76
11.8	317.8	0.55	10.76	96.88	1.40	**9**	0.32	15.84	1.98
13.0	353.2	0.61	11.96	107.64	1.55	**10**	0.35	17.60	2.20
14.4	388.5	0.67	13.16	118.40	1.71	**11**	0.39	19.36	2.42
15.7	423.8	0.73	14.35	129.17	1.86	**12**	0.42	21.12	2.64
17.0	459.1	0.79	15.55	139.93	2.02	**13**	0.46	22.88	2.86
18.3	494.4	0.85	16.74	150.70	2.17	**14**	0.49	24.64	3.08
19.6	529.7	0.92	17.94	161.46	2.33	**15**	0.53	26.40	3.30
20.9	565.0	0.98	19.14	172.22	2.48	**16**	0.56	28.16	3.52
22.2	600.3	1.04	20.33	182.99	2.64	**17**	0.60	29.92	3.74
23.5	635.7	1.10	21.53	193.75	2.79	**18**	0.63	31.68	3.96
24.8	671.0	1.16	22.72	204.51	2.95	**19**	0.67	33.44	4.18
26.2	706.3	1.22	23.92	215.28	3.10	**20**	0.70	35.20	4.40
27.5	741.6	1.28	25.12	226.04	3.26	**21**	0.74	36.96	4.62
28.8	776.9	1.34	26.31	236.81	3.41	**22**	0.77	38.72	4.84
30.1	812.2	1.40	27.51	247.57	3.57	**23**	0.81	40.48	5.06
31.4	847.6	1.46	28.70	258.33	3.72	**24**	0.84	42.24	5.28
32.7	882.9	1.53	29.90	269.10	3.88	**25**	0.88	44.00	5.50
39.2	1059.4	1.83	35.88	322.92	4.65	**30**	1.06	52.80	6.60
45.8	1236.0	2.14	41.86	376.74	5.43	**35**	1.23	61.60	7.70
52.3	1412.6	2.44	47.84	430.56	6.20	**40**	1.41	70.40	8.80
58.8	1589.2	2.75	53.82	484.38	6.98	**45**	1.58	79.20	9.90
65.4	1765.7	3.05	59.80	538.20	7.75	**50**	1.76	88.00	11.00
78.5	2118.9	3.66	71.76	645.84	9.30	**60**	2.11	105.60	13.20
91.5	2472.0	4.27	83.72	753.47	10.85	**70**	2.46	123.20	15.40
104.6	2825.2	4.88	95.68	861.11	12.40	**80**	2.81	140.80	17.60
117.7	3178.3	5.49	107.64	968.75	13.95	**90**	3.17	158.40	19.80
130.8	3531.5	6.10	119.60	1076.39	15.50	**100**	3.52	176.00	22.00

Abbreviations: sq cm = square centimetre, cu m = cubic metre.

Imperial to Metric

Volume			Area				Liquid		
cu yard to cu metre	cu feet to cu metre	cu inch to cu cm	sq yard to sq metre	sq feet to sq m	sq inch to sq cm	**UK Value**	fluid ounce to milli litre	pint to litre	gal to litre
0.8	0.028	16	0.836	0.093	6.45	**1**	28	0.57	4.55
1.5	0.057	33	1.672	0.186	12.90	**2**	57	1.14	9.09
2.3	0.085	49	2.508	0.279	19.36	**3**	85	1.70	13.64
3.1	0.113	66	3.345	0.372	25.81	**4**	114	2.27	18.18
3.8	0.142	82	4.181	0.465	32.26	**5**	142	2.84	22.73
4.6	0.170	98	5.017	0.557	38.71	**6**	171	3.41	27.28
5.4	0.198	115	5.853	0.650	45.16	**7**	199	3.98	31.82
6.1	0.227	131	6.689	0.743	51.61	**8**	227	4.55	36.37
6.9	0.255	148	7.525	0.836	58.06	**9**	256	5.11	40.91
7.6	0.283	164	8.361	0.929	64.52	**10**	284	5.68	45.46
8.4	0.311	180	9.197	1.022	70.97	**11**	313	6.25	50.01
9.2	0.340	197	10.034	1.115	77.42	**12**	341	6.82	54.55
9.9	0.368	213	10.870	1.208	83.87	**13**	369	7.39	59.10
10.7	0.396	229	11.706	1.301	90.32	**14**	398	7.96	63.64
11.5	0.425	246	12.542	1.394	96.77	**15**	426	8.52	68.19
12.2	0.453	262	13.378	1.486	103.23	**16**	455	9.09	72.74
13.0	0.481	279	14.214	1.579	109.68	**17**	483	9.66	77.28
13.8	0.510	295	15.050	1.672	116.13	**18**	511	10.23	81.83
14.5	0.538	311	15.886	1.765	122.58	**19**	540	10.80	86.37
15.3	0.566	328	16.723	1.858	129.03	**20**	568	11.37	90.92
16.1	0.595	344	17.559	1.951	135.48	**21**	597	11.93	95.47
16.8	0.623	361	18.395	2.044	141.94	**22**	625	12.50	100.01
17.6	0.651	377	19.231	2.137	148.39	**23**	653	13.07	104.56
18.4	0.680	393	20.067	2.230	154.84	**24**	682	13.64	109.10
19.1	0.708	410	20.903	2.323	161.29	**25**	710	14.21	113.65
22.9	0.850	492	25.084	2.787	193.55	**30**	852	17.04	136.38
26.8	0.991	574	29.265	3.252	225.81	**35**	994	19.89	159.11
30.6	1.133	655	33.445	3.716	258.06	**40**	1136	22.73	181.84
34.4	1.274	737	37.626	4.181	290.32	**45**	1279	25.57	204.57
38.2	1.416	819	41.806	4.645	322.58	**50**	1421	28.41	227.30
45.9	1.699	983	50.168	5.574	387.10	**60**	1705	34.09	272.76
53.5	1.982	1147	58.529	6.503	451.61	**70**	1989	39.78	318.22
61.2	2.265	1311	66.890	7.432	516.13	**80**	2273	45.46	363.68
68.8	2.549	1475	75.252	8.361	580.64	**90**	2557	51.14	409.14
76.5	2.832	1639	83.613	9.290	645.16	**100**	2841	56.82	454.60

Abbreviations: sq cm = square centimetre, cu m = cubic metre.

Printed in England

© Rolls-Royce Motors Limited 1979

Metric to Imperial

Weights					Linear Measure			
tonne to ton	kg to cwt	kg to lb	g to ounce	**Metric Value**	mm to inch	m to foot	m to yard	km to mile
0.98	0.02	2.20	0.04	**1**	0.039	3.28	1.09	0.62
1.97	0.04	4.41	0.07	**2**	0.079	6.56	2.19	1.24
2.95	0.06	6.61	0.11	**3**	0.118	9.84	3.28	1.86
3.94	0.08	8.82	0.14	**4**	0.158	13.12	4.38	2.49
4.92	0.10	11.02	0.18	**5**	0.197	16.40	5.47	3.11
5.91	0.12	13.23	0.21	**6**	0.236	19.69	6.56	3.73
6.89	0.14	15.43	0.25	**7**	0.276	22.97	7.66	4.35
7.87	0.16	17.64	0.28	**8**	0.315	26.25	8.75	4.97
8.86	0.18	19.84	0.32	**9**	0.354	29.53	9.84	5.59
9.84	0.20	22.05	0.35	**10**	0.394	32.81	10.94	6.21
10.83	0.22	24.25	0.39	**11**	0.433	36.08	12.03	6.84
11.81	0.24	26.46	0.42	**12**	0.472	39.37	13.12	7.46
12.79	0.26	28.66	0.46	**13**	0.512	42.65	14.22	8.08
13.78	0.28	30.86	0.49	**14**	0.551	45.93	15.31	8.70
14.76	0.30	33.07	0.53	**15**	0.591	49.21	16.40	9.32
15.75	0.32	35.27	0.56	**16**	0.630	52.49	17.50	9.94
16.73	0.34	37.48	0.60	**17**	0.669	55.77	18.59	10.56
17.72	0.35	39.68	0.64	**18**	0.709	59.06	19.69	11.18
18.70	0.37	41.89	0.67	**19**	0.748	62.34	20.78	11.81
19.68	0.40	44.09	0.71	**20**	0.787	65.62	21.87	12.43
20.67	0.41	46.30	0.74	**21**	0.827	68.90	22.97	13.05
21.65	0.43	48.50	0.78	**22**	0.866	72.18	24.06	13.67
22.64	0.45	50.71	0.81	**23**	0.906	75.46	25.15	14.29
23.62	0.47	52.91	0.85	**24**	0.945	78.74	26.25	14.91
24.61	0.49	55.12	0.88	**25**	0.984	82.02	27.34	15.53
29.53	0.59	66.14	1.06	**30**	1.181	98.43	32.81	18.64
34.45	0.69	77.16	1.24	**35**	1.378	114.83	38.28	21.75
39.37	0.79	88.18	1.41	**40**	1.575	131.23	43.75	24.85
44.29	0.89	99.21	1.59	**45**	1.772	147.64	49.21	27.96
49.21	0.99	110.23	1.76	**50**	1.969	164.04	54.68	31.07
59.05	1.18	132.28	2.12	**60**	2.362	196.85	65.62	37.28
68.90	1.37	154.32	2.47	**70**	2.756	229.66	76.55	43.50
78.74	1.58	176.37	2.82	**80**	3.150	262.47	87.49	49.71
88.58	1.77	198.42	3.18	**90**	3.543	295.28	98.43	55.92
98.42	1.97	220.46	3.53	**100**	3.937	328.08	109.36	62.14

Abbreviations: g = gramme, kg = kilogramme, m = metre,
mm = millimetre, km = kilometre. Imperial weights are avoirdupois.

Imperial to Metric

Weights					Linear Measure			
ton to tonne	cwt to kg	lb to kg	ounce to g	UK Value	inch to mm	feet to m	yard to m	mile to km
1.02	50.8	0.45	28.35	1	25.4	0.30	0.91	1.61
2.03	101.6	0.91	56.70	2	50.8	0.61	1.83	3.22
3.05	152.4	1.36	85.05	3	76.2	0.91	2.74	4.83
4.06	203.2	1.81	113.40	4	101.6	1.22	3.66	6.44
5.08	254.0	2.27	141.75	5	127.0	1.52	4.57	8.05
6.10	304.8	2.72	170.10	6	152.4	1.83	5.49	9.66
7.11	355.6	3.18	198.45	7	177.8	2.13	6.40	11.27
8.13	406.4	3.63	226.80	8	203.2	2.44	7.32	12.88
9.14	457.2	4.08	255.15	9	228.6	2.74	8.23	14.48
10.16	508.0	4.54	283.50	10	254.0	3.05	9.14	16.09
11.18	558.8	4.99	311.85	11	279.4	3.35	10.06	17.70
12.19	609.6	5.44	340.20	12	304.8	3.66	10.97	19.31
13.21	660.4	5.90	368.54	13	330.2	3.96	11.89	20.92
14.22	711.2	6.35	396.89	14	355.6	4 27	12.80	22.53
15.24	762.0	6.80	425.24	15	381.0	4.57	13.72	24.14
16.26	812.8	7.26	453.59	16	406.4	4.88	14.63	25.75
17.27	863.6	7.71	481.94	17	431.8	5.18	15.54	27.36
18.29	914.4	8.16	510.29	18	457.2	5.49	16.46	28.97
19.30	965.2	8.62	538.64	19	482.6	5.79	17.37	30.58
20.32	1016.0	9.07	566.99	20	508.0	6.10	18.29	32.19
21.34	1066.8	9.53	595.34	21	533.4	6.40	19.20	33.80
22.35	1117.7	9.98	623.69	22	558.8	6.71	20.12	35.41
23.37	1168.5	10.43	652.04	23	584.2	7.01	21.03	37.01
24.39	1219.3	10.89	680.39	24	609.6	7.32	21.95	38.62
25.40	1270.1	11.34	708.74	25	635.0	7.62	22.86	40.23
30.48	1524.1	13.61	850.49	30	762.0	9.14	27.43	48.28
35.56	1778.1	15.88	992.23	35	889.0	10.67	32.00	56.33
40.64	2032.1	18.14	1133.98	40	1016.0	12.19	36.58	64.37
50.80	2540.1	22.68	1417.48	50	1270.0	15.24	45.70	80.47
60.96	3048.1	27.22	1700.97	60	1524.0	18.29	54.86	96.56
71.12	3556.2	31.75	1984.47	70	1778.0	21.34	64.01	112.65
81.28	4064.2	36.29	2267.96	80	2032.0	24.38	73.15	128.75
91.44	4572.2	40.82	2551.46	90	2286.0	27.43	82.30	144.84
101.61	5080.2	45.36	2834.95	100	2540.0	30.48	91.44	160.93

Abbreviations: g = gramme, kg = kilogramme, m = metre, mm = millimetre, km = kilometre. Imperial weights are avoirdupois.

Printed in England

© Rolls-Royce Motors Limited 1979

Chapter B

Special Processes

Section

B1 Storage and Recommissioning
B2 Shipping Precautions

Printed in England

© Rolls-Royce Motors Limited 1979

December 1979

T.S.D. 4200

Chapter B

Issue record sheet 1

December 1979

The dates quoted below refer to the issue date of individual pages within this chapter.

Section	B1	B2
Page No.		
1	Dec 79	Dec 79
2	Dec 79	
3		
4		
5		
6		
7		
8		
9		
10		
11		
12		
13		
14		
15		
16		
17		
18		
19		
20		
21		
22		
23		
24		
25		
26		
27		
28		
29		
30		
31		
32		
33		
34		
35		
36		
37		
38		
39		
40		
41		
42		
43		
44		
45		
46		
47		
48		

Printed in England

© Rolls-Royce Motors Limited 1979

Section B1

Storage and Recommissioning

Printed in England

© Rolls-Royce Motors Limited 1979

December 1979

TSD 4200

Introduction

The success of the following recommended storage procedures depends upon correct initial preparation, regular inspection and maintenance.

Care must be taken when topping-up the reservoirs of the hydraulic brakes and height control systems that the correct fluid is used.

On all cars prior to car serial number 50 001 use Castrol RR 363 Brake Fluid.

On Corniche and Camargue cars from car serial number 50 001 use Castrol Hydraulic System Mineral Oil or Total Mineral Oil LHM.

Storage

The storage building should be dry and well ventilated. If the building is heated, the temperature must remain constant twenty four hours a day.

Corniche Convertible cars should be stored with the hood raised and the hood clips securely fastened.

Storage recommendations

Prior to storage, thoroughly clean the carpets, rugs and upholstery. Treat all leather upholstery with Connolly's Hide Food.

Thoroughly wash the exterior bodywork of the car as described in Chapter A.

Any damaged paintwork discovered during this operation should be reported to the owner.

Apply a good quality cleaner/polish followed by a good quality silicone wax polish.

Throughout the storage period the following procedures should be carried out every two weeks.

1. Remove, clean and fully charge the battery and if necessary top-up with distilled water.
2. Check the coolant level in the radiator and top-up if necessary.
3. Ensure that the fluid levels in the engine sump, torque converter transmission, steering pump, final drive unit, brake and height control reservoirs and the power operated hood reservoir on Corniche Convertible cars are to the maximum level marks.
4. Check the tyre pressures including the spare tyre and adjust if necessary (see Chapter R).
5. Ensure that all controls, instruments, warning panels and lamps are operating satisfactorily.
6. Run the car for a minimum of 16 kilometres (10 miles) to ensure complete lubrication of internal components.
7. Allow the car to cool, then wash the exterior bodywork.

When the car has thoroughly dried, cover it with a light cotton or muslin dust sheet.

If it is not possible to carry out the above recommended storage procedures, the following storage procedures may be adopted though they will not provide the same degree of protection.

Storage periods between one and three months

1. Remove, clean and fully charge the battery. If necessary top-up with distilled water. Once a month, re-charge the battery until the specific gravity of the electrolyte has remained constant for between ten and twelve hours.
2. Check the coolant level in the radiator and top-up if necessary.
3. Ensure that the fluid levels in the engine sump, torque converter transmission, steering pump, final drive unit, brake and height control reservoirs and the power operated hood reservoir on Corniche Convertible cars are to the maximum level marks.
4. Wash the exterior bodywork of the car.

Any damaged paintwork discovered during this operation should be reported to the owner.

5. Apply a good quality cleaner/polish followed by a good quality silicone wax polish.
6. Increase the tyre pressures to 2,8 kgf/sq.cm. (40 lbf/sq.in.). The pressure of the spare wheel tyre does not need increasing.
7. Cover the car with a light cotton or muslin dust sheet, ensuring that the tyres are covered if sunlight is able to penetrate into the storage area.

Storage periods between three and six months

1. Drive the car for approximately 16 kilometres (10 miles) to warm the engine oil, torque converter transmission and final drive unit. This will ensure complete lubrication of the internal components.
2. Check the coolant level in the radiator and top-up if necessary. Under no circumstances leave the cooling system dry.
3. Remove the sparking plugs and inject two table-spoonsful of a corrosion preventive oil into each cylinder. Suitable oils are BP Energol Protective Oil 20 and Castrol Storage Oil 20. Using the starter motor, turn the engine to distribute the oil over the cylinder walls. Fit the sparking plugs.
4. Ensure that the fluid levels in the engine sump, torque converter transmission, steering pump, final drive unit, brake and height control reservoirs and the power operated hood reservoir on Corniche Convertible cars are to the maximum level marks.
5. Thoroughly clean the carpets, upholstery and cushions.
6. Treat all leather upholstery with an application of Connolly's Hide Food.

7. Wash the exterior bodywork of the car.
Any damaged paintwork discovered during this operation should be reported to the owner.
8. Apply a good quality cleaner/polish followed by a good quality silicone wax polish.
9. Clean all chromium plating and stainless steel then lightly smear with petroleum jelly.
10. Remove, clean and fully charge the battery. Once a month, re-charge the battery until the specific gravity of the electrolyte has remained constant for between ten and twelve hours.
11. Jack up the car and place supports under the rear trailing arms and the outer side of the front lower triangle levers. Do not deflate the tyres but cover them with light cotton or muslin to ensure against the possibility of sunlight penetrating into the storage area.

Storage periods exceeding six months
With the exception of Operation 4 the following additional measures to those listed for storage periods between three and six months are recommended.
1. Ensure that the fluid levels in the torque converter transmission, steering pump, brake and height control reservoirs and the power operated hood reservoir on Corniche Convertible cars are to the maximum level marks.
2. Drain the final drive unit and the engine sump, then fill them to the normal levels with a corrosion preventive oil. Run the engine for one minute to distribute the oil.
3. On cars other than those built to a North American or Japanese specification, to prevent the formation of deposits of gum in the fuel system, drain or syphon the fuel tank and then run the engine until the fuel system is empty.
On cars built to a North American or Japanese specification drain or syphon the fuel tank, but **do not** run the engine to completely drain the system.
Position a note on the facia panel stating that the fuel tank is empty and that no attempt must be made to start the engine until the tank contains fuel.
4. On cars other than those built to a North American or Japanese specification remove the fuel pump unit and carefully drain or syphon any fuel into a closed container, then refit the unit.
5. Check the hoses of the cooling system. If any are found to be defective, report to the owner.
6. Dust the carpets and rugs with anti-moth powder and store them in a dry place.
7. If the storage building is dry, leave the car windows slightly open.
If there is any tendency towards dampness, close the doors and windows and place an anti-moisture compound such as silica-gel or calcium chloride in an open metal container inside the car.

Recommissioning procedure
If the car has been stored in accordance with the stated procedures the following points are all that should require attention before the car is roadworthy.
1. Lower the car onto its tyres. Check the tyre pressures and adjust if necessary.
2. Fully charge and fit the battery.
3. Drain any corrosion preventive oil from the engine sump and final drive unit. Fit a new engine oil filter element and then fill the engine sump and final drive unit with the approved oils (see Chapter D).
4. Check the coolant level in the radiator and top-up if necessary.
5. Remove the sparking plugs and prime the cylinders with engine oil. Using the starter motor, turn the engine over to distribute the oil and to prevent a hydraulic lock.
If the car has been run every two weeks during the storage period, it will not be necessary to prime the cylinders.
6. Clean the sparking plugs and if necessary set the gaps; fit the plugs.
7. Lubricate the distributor advance mechanism by removing the rotor and applying two or three drops of engine oil to the top of the spindle and through a convenient aperture in the distributor baseplate.
8. Ensure that the fluid levels in the engine sump, torque converter transmission, steering pump, final drive unit, brake and height control reservoirs and the power operated hood reservoir on Corniche Convertible cars are to the maximum level marks.
9. Lubricate all grease points.
10. If the fuel tank has been drained, fill the tank and start the engine. Check that the engine oil pressure and ignition warning lamps are not illuminated. Also, check for coolant, oil or fuel leaks.
Note
If the brake pressure warning panels illuminate refer to Chapter G immediately.
11. Check the operation of all controls, instruments, warning panels, lamps and accessories.

Section B2

Shipping Precautions

Introduction

When transporting a Rolls-Royce or Bentley motor car overseas, always contact a reputable shipping agent to obtain the correct advice and service. However, the following points should be brought to the notice of the shipping agent.

Precautions

1. On cars other than those built to a North American or Japanese specification, drain or syphon the fuel from the tank and run the engine until the fuel system is empty.
2. On cars built to a North American or Japanese specification damage to the catalytic converter could occur if the engine is allowed to run until the fuel system is completely empty. Therefore, before completely draining or syphoning the fuel system the catalytic converter must be removed and a conventional front silencer fitted.
3. It should be noted that cars fitted with a catalytic converter must only be operated on unleaded fuel. Therefore, if unleaded fuel is not available the catalytic converter must be replaced with a conventional front silencer.
4. It is of the utmost importance that service personnel should fully appreciate that the hydraulic systems of the car operate at **high pressures** and that personnel are fully conversant with the precautions which must be taken to ensure correct operation of the systems. Special attention should therefore be given to the section on Special Precautions in Chapters A and G.
5. Ensure that the battery is disconnected and the terminals taped up.
6. Cover the radiator, bumpers and all outer chromed parts with masking tape.
7. When the car is shipped in a container, place a bag of silica-gel adjacent to each wheel trim and one inside the engine compartment.

Printed in England

© Rolls-Royce Motors Limited 1979

December 1979

TSD 4200

Chapter C

Automatic air conditioning unit

Section

Exhaust gas poisoning and First aid

C1 Basic operation
C2 Refrigeration unit
C3 Component description
C4 Interlock and Inhibit system
C5 Component removal, and assembly
C6 A.C.U. test box
C7 System test and fault diagnosis
C8 Detailed circuit description

Printed in England

© Rolls-Royce Motors Limited 1978

March 1978

T.S.D. 4200

Chapter C

Issue record sheet 1

July 1980

The dates quoted below refer to the issue date of individual pages within this chapter.

Section	C1	C2	C3	C4	C5	C6	C7	C8	Supp 1
Page No.									
1	Mar 78	Mar 78	Mar 78	Aug 78	Mar 78	Mar 78	Dec 78	Dec 78	Jan 79
2	Mar 78	Mar 78	Mar 78	Aug 78	Mar 78	Mar 78	Dec 78	Dec 78	Jan 79
3	Mar 78	Mar 78	Mar 78	Aug 78	Mar 78		Sept 78	Dec 78	
4		Mar 78	Mar 78	Aug 78	Mar 78		Sept 78	Dec 78	
5		Jul 80	Mar 78	Mar 78	Mar 78		Sept 78	Dec 78	
6		Jul 80	Mar 78	Mar 78	Mar 78		Sept 78	Dec 78	
7		Mar 78	Mar 78	Mar 78	Mar 78		Dec 79	Dec 78	
8					Mar 78		Dec 79	Dec 78	
9					Mar 78		Sept 78	Dec 78	
10					Mar 78		Sept 78	Dec 78	
11					Mar 78		Sept 78	Feb 80	
12					Mar 78		Sept 78	Feb 80	
13					Mar 78		Sept 78		
14					Mar 78		Sept 78		
15					Mar 78		Sept 78		
16					Mar 78		Sept 78		
17					Mar 78		Sept 78		
18							Sept 78		
19							Sept 78		
20							Sept 78		
21							Sept 78		
22							Sept 78		
23							Sept 78		
24							Sept 78		
25							Sept 78		
26							Sept 78		
27							Sept 78		
28							Sept 78		
29							Sept 78		
30							Sept 78		
31							Sept 78		
32							Sept 78		
33							Sept 78		
34							Sept 78		
35							Sept 78		
36							Sept 78		
37							Sept 78		
38							Sept 78		
39							Dec 79		
40							Dec 79		
41							Sept 78		
42							Sept 78		
43							Sept 78		
44							Sept 78		
45							Sept 78		
46							Sept 78		
47							Sept 78		
48							Sept 78		

Printed in England
© Rolls-Royce Motors Limited 1980

Chapter C

Issue record sheet 2

March 1984

The dates quoted below refer to the issue date of individual pages within this chapter.

Section	C1	C2	C3	C4	C5	C6	C7
Page No.							
49							Sept 78
50							Sept 78
51							Sept 78
52							Sept 78
53							Dec 78
54							Dec 78
55							Sept 82
56							Sept 82
57							Dec 78
58							Dec 78
59							Mar 84
60							Mar 84
61							Dec 78
62							Dec 78
63							Dec 78
64							Dec 78
65							Dec 78
66							Dec 78
67							Dec 78
68							Dec 78
69							Dec 78
70							Dec 78
71							Dec 78
72							Dec 78
73							Dec 78
74							
75							
76							
77							
78							
79							
80							
81							
82							
83							
84							
85							
86							
87							
88							
89							
90							
91							
92							
93							
94							
95							
96							

Printed in England

© Rolls-Royce Motors Limited 1984

T.S.D. 4200

Printed in England

© Rolls-Royce Motors Limited 1978

March 1978

T.S.D. 4200

Chapter C

Exhaust gas poisoning and First aid

Danger - Exhaust gases
Sitting in the car in a confined space with the engine running is dangerous. Operating the air-conditioning unit will increase this danger.

First-aid - Refrigerant burns
If the skin is injured by refrigerant it should be bathed with cold water and treated in a similar manner to frostbite.

An eye injured by refrigerant must be immediately washed with clean cold water. The eye must not be rubbed as this will aggravate the injury.

A doctor should be consulted as soon as possible after administering this emergency treatment.

Section C1

Basic operation

Introduction

The air conditioning system is complex, therefore Chapter C has been written to try and build up a picture of how the system operates, from a simple component description and location to a detailed circuit description.
The content of each section is as follows

Section C1 - Basic operation
Briefly describes what the air conditioning system does and how it does it. A diagram is included showing the flow of air within the system and how the temperature and direction of the air is controlled.

Section C2 - Refrigeration unit
Describes the refrigeration cycle, precautions to take when handling the refrigerant and servicing the refrigeration system.

Section C3 - Component description
The function of each major component is described and the location shown.

Section C4 - Interlock and Inhibit systems
The interlock and inhibit systems prevent the ACU from operating under certain circumstances. What these circumstances are and how the systems operate is fully described. The location of the relays and other components used in the systems are shown.

Two schematic wiring diagrams are included, one for the interlock system and one for the inhibit system.

Section C5 - Component removal and assembly
The removal and assembly of the major components is described with illustrations showing how they are fitted to the car.

Section C6 - ACU test box
The function of the box is described with instructions for using the box as a servo position indicator and how to calibrate the temperature selectors.

Section C7 - System test and fault diagnosis
Describes the procedure for testing the system and correct faults.

Section C8 - Detailed circuit description
The operation of the ACU is fully described to enable the reader to understand the system and therefore to eventually make fault diagnosis easier. A theoretical wiring diagram of the full ACU is included.

Basic A.C.U. operation

Within the limitations of the system, the air conditioning unit (A.C.U.) will automatically maintain any pre-selected in-car temperature in both the upper part and lower part of the car.

The required temperatures for both the upper part and lower part of the car are independently selected by two dials and the in-car temperatures are measured by sensors located in the upper and lower part of the car. Sensors also measure the outside air temperature. The required temperature and actual temperature are compared by a servo module which signal actuators and fans to operate accordingly.

Air entering the A.C.U. can either be fresh from outside the car or recirculated from inside the car dependent upon the position of two flaps which are controlled by a servo. All air, fresh or recirculated is dried and cooled by blowing it through a refrigeration evaporator.

A proportion of the cooled air passes through a heater matrix and is subsequently mixed with the remaining cool air which has by-passed the heater matrix. The proportion is determined by two infinitely variable temperature flaps which are controlled by two servos, one for the upper system air and one for the lower system air.

The upper air passes to either the facia or the windscreen, depending on the position of a mode flap. The lower air passes to front and rear footwells when the lower control flap is in open position.

An interlock system prevents the A.C.U. from operating until the car engine is running and an inhibit system prevents the fans operating under certain circumstances.

Printed in England

© Rolls-Royce Motors Limited 1978

March 1978

T.S.D. 4200

Basic operation

Airflow and control lines
Fig.C1

Printed in England
© Rolls-Royce Motors Limited 1978
March 1978
T.S.D. 4200

 © Rolls-Royce Motors Limited 1978 Printed in England

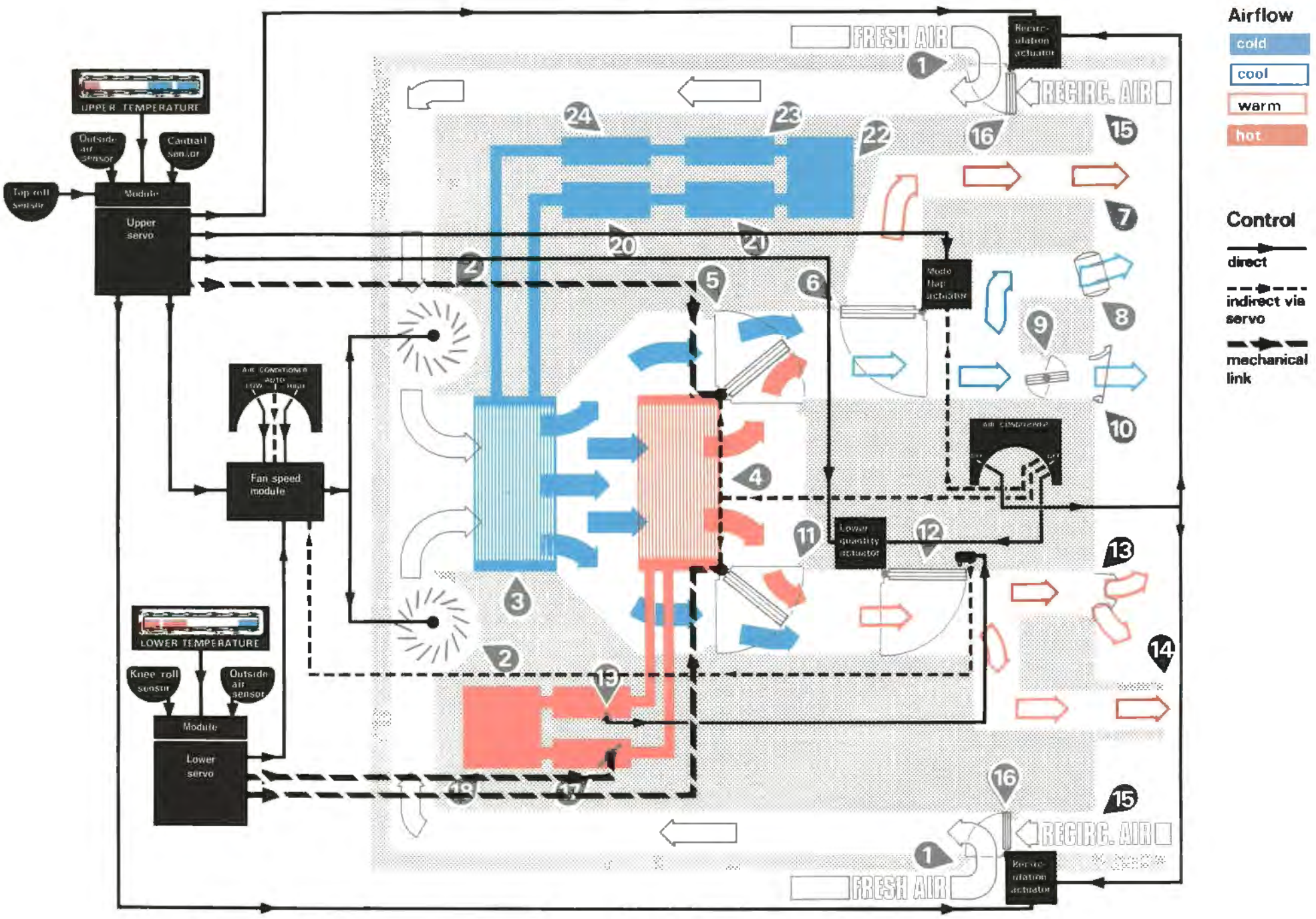

1 Scuttle air intake
2 Fans
3 Refrigeration evaporator
4 Heater matrix
5 Upper air temperature blend flap
6 Mode flap
7 Windscreen outlet
8 Swivelling facia outlet
9 Rectangular outlet flap
10 Rectangular outlet
11 Lower air temperature blend flap
12 Lower quantity flap
13 Front footwell outlet
14 Rear footwell outlet
15 Recirculated air inlets
16 Recirculation flaps
17 Water tap
18 Engine cooling system
19 Fan inhibit switch
20 Suction throttling valve
21 Refrigeration compressor
22 Condenser matrix
23 Receiver/drier
24 Expansion valve

Airflow

Air entering the A.C.U. can be either fresh from outside the car or recirculated from inside the car dependent upon the position of the recirculation flaps which is determined by the upper servo. However, this control by the upper servo is overridden when the A.C.U. is set to OFF, the recirculation flaps then move to the recirculation position.

All air, fresh or recirculated, is dried and cooled by blowing it through a refrigeration evaporator. A proportion of the cold air passes through a heater matrix which is connected to the engine cooling system, the temperature in the matrix is controlled by a water tap which is connected to the lower servo. The remaining cold air by-passes the heater matrix and is subsequently blended with the air from the matrix, this blend of hot and cold air is determined by two temperature blend flaps, one for the upper system air and one for the lower system air. The temperature of the air from the blend flaps depends upon the temperature required inside the car, the actual temperature inside the car, the outside air temperature and the position of the flaps.

The air from the upper blend flap passes to either the facia or the windscreen depending upon the position of the mode flap. This flap directs the air to the facia outlets whenever the upper servo is between the 'full cold' position and 25% towards the 'full hot' position. When the servo is between 25% of 'full hot' and the 'full hot' position, the air is directed to the windscreen outlets. Servo position is sensed by a microswitch on the servo. In this way, the air from the facia outlets will generally be cooler than the air from the windscreen.

Air from the lower blend flap passes to the front and rear footwells via the lower quantity flap which is closed until the upper servo has moved 15% of its travel from the 'full cold' position, this position is sensed by a microswitch on the servo.

Control

The required temperatures for both the upper part and lower part of the car can be independently selected by two dials. The actual temperatures for each part are measured by two sets of sensors (called sensor chains), the upper sensor chain has 3 sensors and the lower sensor chain has 2 sensors. The required temperature and actual temperature for each part of the car are compared by servo modules which signal the actuators to operate accordingly.

The upper servo controls the upper blend flap, mode flap and lower quantity flap. The lower servo controls the lower blend flap and water tap. Both servos control the fan speed module, the fan speed is the average of that required by each servo.

The AIR CONDITIONER switch closes the recirculation flap to allow recirculation in the OFF position, directly controls the fan speed module in the LOW position and the lower quantity flap in the DEF position. In addition to these directly controlled functions, the switch indirectly controls (via the servos) the blend flaps, mode flap and fan speed module in the DEF position and also the fan speed module in the AUTO position.

Note

The airflow temperatures shown in the diagram are for a car in a temperate climate with the temperature settings in the 'preferred' position.

Section C2

Refrigeration unit Contents

	Page
Description	C2 - 3
Refrigeration - special precautions and accident damage	
Handling the refrigerant	C2 - 3
Accident damage	C2 - 4
Chemical stability of refrigerant	C2 - 4
Servicing the refrigeration system	
Refrigeration system - To discharge, purge or drain	C2 - 5
Refrigeration system - To evacuate	C2 - 5
Refrigeration system - To sweep	C2 - 6
Refrigeration system - To charge	C2 - 6
Oil level - refrigeration system	C2 - 7
Replacing components	C2 - 7
Low refrigerant charge protector system	C2 - 7

Printed in England
© Rolls-Royce Motors Limited 1978

March 1978
T.S.D. 4200

Section C2

Refrigeration unit

Description (see Fig C2)
The refrigerant (Refrigerant 12) is circulated by a compressor which is driven from the engine crankshaft by twin 'vee' belts. An electro-magnetic clutch is incorporated in the compressor that is energised in the engaged position at all times when the engine is running except when the ambient temperature is below 0°C.

High pressure vapour is pumped from the compressor to the condenser matrix where it condenses from vapour at the top of the matrix to a liquid at the bottom of the matrix. The liquid passes to a receiver/drier which absorbs any traces of moisture that may be present and it also ensures that the refrigerant passes to the expansion valve in liquid form.

A sight glass on the drier enables the refrigerant to be inspected whilst the system is operating when a steady flow of liquid should be observed. If bubbles or foam can be seen it usually indicates incorrect operation of the system or insufficient refrigerant, however it is normal for some foaming to show when the ambient air temperature is below 21 °C. The refrigerant is pumped to the expansion valve which controls the flow of refrigerant to the evaporator. To achieve this, the temperature in the evaporator outlet pipe is sensed by a phial attached to the outside of the pipe and the pressure in the pipe is sensed by an equaliser line connected to the suction throttling valve.

When the refrigerant enters the evaporator, heat is transferred from the air passing through the evaporator to the refrigerant causing the refrigerant to evaporate, thereby cooling the air.

From the evaporator, the refrigerant (which is now a low pressure vapour) passes to the suction throttling valve which 'throttles' the refrigerant flow to maintain a constant pressure within the evaporator regardless of the compressor speed or evaporator loading. The refrigerant then passes to the compressor as a low pressure vapour.

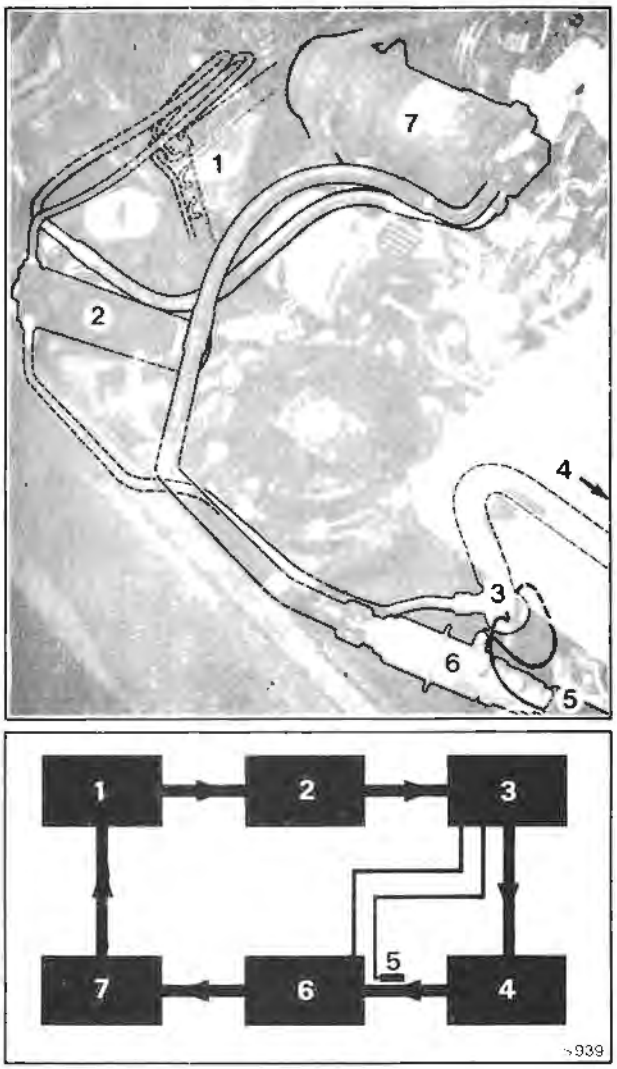

Fig. C2 Refrigeration component layout
1 Condenser matrix
2 Receiver/drier
3 Expansion valve
4 Evaporator matrix
5 Sensor
6 Suction throttling valve
7 Compressor

Refrigeration special precautions & accident damage

Handling the refrigerant
The refrigerant used in the air conditioning system is dichlorodifluoromethane (internationally known as Refrigerant 12) and is usually supplied to the Service network as a liquid under pressure in either disposable containers or metal drums, dependent upon the quantity ordered.

If it is correctly handled the refrigerant is perfectly safe, however if incorrectly handled it can cause serious injury or damage. In particular, smoking in the region of exposed refrigerant can be

Printed in England
© Rolls-Royce Motors Limited 1978
March 1978
T.S.D. 4200

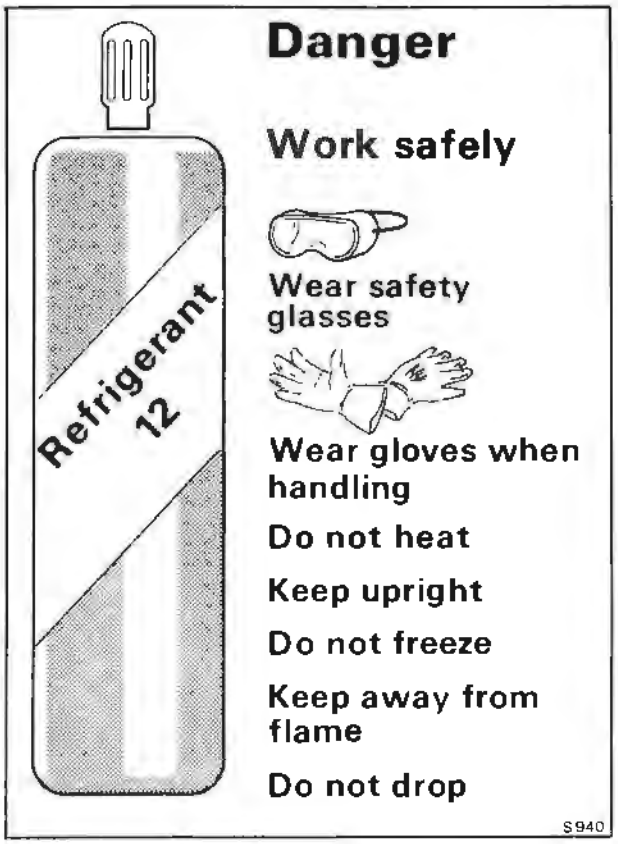

Fig. C3 Refrigerant handling - safety precautions



Fig. C4 Approved refrigerant oil

a health hazard. The following elementary safety precautions should be adopted when handling refrigerant:

1. If the drum has a metal cap, always ensure that the cap is fitted when not in use.

2. Do not carry refrigerant in the passenger compartment of a car, always place the drum in the luggage compartment.

3. If a drum is to be transported or stored,always shield it from the direct rays of the sun. (The sun's heat could increase the pressure within the drum sufficiently to activate the safety valve causing the refrigerant to escape.)

4. A drum must not be overfilled because the increased pressure can cause the drum to explode before the temperature rises to a point where the temperature safety valve is activated.

5. Do not subject the drum to high temperatures when charging the system. The drum must not be placed on a radiator or stove, neither must a blow-lamp be used for heating the drum.

To heat the drum when charging, the drum should be immersed in warm water which must not exceed 51°C.

6. Do not discharge the refrigerant where there is an exposed flame or where it can be drawn into the engine air intake. Concentrations of this refrigerant in contact with a flame can produce a poisonous gas.

7. Do not discharge the refrigerant in a confined space because it will displace the air which could result in suffocation.

8. **Always wear goggles** when carrying out work which involves the use of refrigerant or when opening any of the lines. If an accident occurred and refrigerant struck the face, goggles would protect the eyes and therefore reduce the risk of serious injury.

9. Excessive heat applied to any section of the refrigerant lines will create excessively high pressures, therefore welding should not be carried out on any part of the car adjacent to the refrigerant units or lines.

Accident damage (refrigerant)

It is essential that the air conditioning system is inspected as soon as possible if the car has been involved in an accident.

If the system has been 'opened' as a result of an accident, air, moisture and dirt could have entered the system causing internal damage to the components. The extent of the damage and the length of time since the damage occurred will govern the amount of work required to correct the system. A definite repair procedure cannot be recommended to cover all cases of accident damage therefore the following guidelines should be followed:

1. Ensure that the compressor clutch is disengaged if the car is to be driven before repair work is carried out. This can be achieved by disconnecting the blue/yellow cable from the compressor ambient

switch located on the engine compartment face of the evaporator box (Fig. C19)
2. Inspect all refrigeration components and lines.
3. If the condenser has been damaged it MUST be replaced; soldering, brazing or welding etc. must not be attempted.
4. Fit a new receiver/drier if damage has occurred or if the system has been 'open' for more than one day.
5. Check the compressor and clutch pulley for cracks, if the clutch plate is bright yellow it should be replaced.
6. If the compressor does not show signs of external damage it may be used again.

Chemical stability of the refrigerant
The efficient operation of the air conditioning system depends upon the pressure/saturation temperature relationship of the refrigerant. Provided that the system contains pure refrigerant, plus a certain amount of refrigerant oil which mixes with the refrigerant, it is considered to be chemically stable.

However, when foreign materials such as dirt, air or moisture enters the system, the chemical stability is affected which results in a change in the pressure/saturation temperature relationship of the refrigerant. The system will then no longer operate at the correct pressures and temperatures which decreases the efficiency of the system. The following general rules should be observed to ensure chemical stability in the system.
1. Before disconnecting a refrigeration connection, wipe away all dirt or oil from the connection to prevent foreign matter entering the system.
2. All tools should be kept clean and dry.
3. Before adding oil, ensure that the container and tube (if any) is clean and dry in order to keep the refrigerant oil as free of moisture as possible.
4. Before 'opening' the refrigeration system, ensure that all tools etc. are close at hand to reduce the operation time to a minimum. Do not leave the system 'open' longer than necessary.
5. If the system has been 'opened' and sealed again, it must be correctly evacuated.

Servicing the refrigeration system

Refrigeration system - To discharge, purge or drain
1. The refrigerant must be discharged from the system before 'opening' any joint. Always wear goggles when carrying out work which involves 'opening' refrigerant lines.
2. Refrigerant must not be discharged near an open flame otherwise a poisonous gas will be formed. This also applies to discharging when smoking a cigarette or near a car engine air intake.
3. Remove the caps from the compressor discharge valve and the service connection of the suction throttling valve and attach to the manifold gauge set (with depressors fitted), after ensuring that the

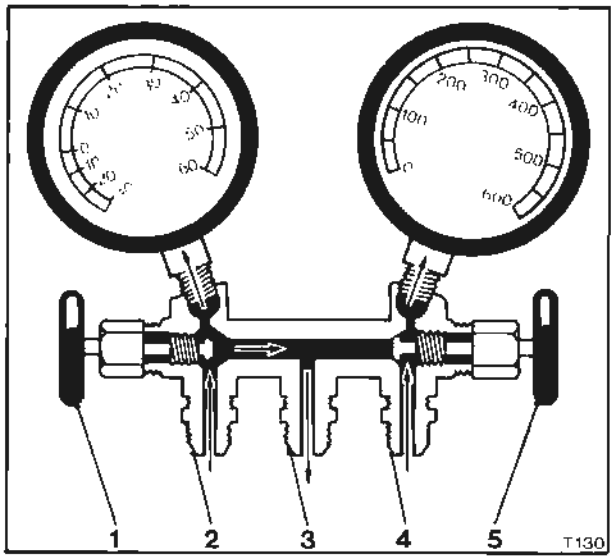

Fig. C5 Manifold gauge set
The illustration shows the manifold hand valve with the suction side cracked, while high side remains closed. Pressure is recorded on both gauges even though one hand valve is cracked.
1 'Low' side hand valve
2 Connection to suction throttling valve
3 Charging or evacuating connection
4 Connection to compressor
5 'High' side hand valve

valves are closed. Attach a pipe to the centre connection of the gauge set.
4. Crack both hand valves and open further as the system discharges.
5. Do not release the refrigerant too quickly as this can result in oil being drawn from the system. If any trace of oil is noticed, loosen the adapter. The operation should require at least 15 minutes to ensure complete discharge.
Note
Any oil which has discharged into the container should be measured and a corresponding amount added to the system.
6. When all the refrigeration appears to have escaped, slacken the adapter to close the valve and allow approximately two minutes for any build-up of pressure in the system to develop, then repeat the discharge procedure.

This operation should be repeated until all the refrigerant has been discharged.

Refrigeration system - To evacuate
1. Ensure that the system is fully discharged.
2. Connect the centre pipe of the manifold set to the vacuum pump. The vacuum pump should have a 20-0 torr vacuum gauge fitted (1mm Hg = 1torr).
3. Open both valves on the manifold set and switch on the vacuum pump. When a reading of 5 torr or less has been obtained, allow the pump to operate for a further 15 minutes.
Note
The vacuum of 5 torr is related to sea level only.

Printed in England
© Rolls-Royce Motors Limited 1978

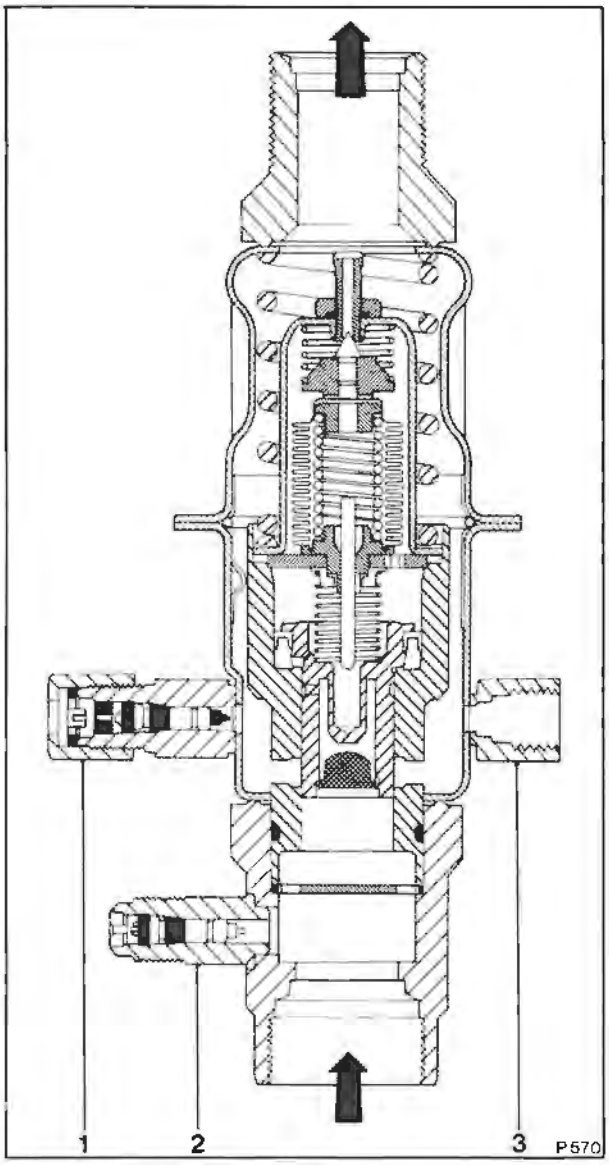

Fig. C6 Suction throttling valve
1 Oil bleed line
2 Service valve connection
3 Equaliser line connection

4. Switch off the vacuum pump, if the vacuum falls quickly investigate for a leak.
5. If the system loses vacuum very slowly, a leak is possible but it is advisable to evacuate for a further 45 minutes to eliminate the possibility of residual liquid refrigerant in the compressor oil vaporising and causing the pressure to rise.
6. The final vacuum reading obtained should be held for 30 minutes to ensure that there are no leaks in the system.

Refrigeration system - To sweep
1. Evacuate the system
2. Connect the refrigerant bottle to the centre connection of the manifold set, close the low side valve (to suction throttling valve) and open the valve on the bottle.
3. Ensure that the low pressure gauge comes out of vacuum, close the high side valve (to compressor) and open the low side valve.
4. Charge the system with 0,45 kg (1lb) of Refrigerant 12. If the ambient temperature is low it may be necessary to start the engine and switch on the system in order to draw in the refrigerant. Run the engine for a further 10 minutes with ACU switch set to HIGH.
5. Switch the system off and stop the engine.
6. Allow 5 to 10 minutes for the refrigerant pressure to equalise.
7. Leak test the system using an electrical leak detector. If a leak is detected, it must be rectified and the discharge and evacuation operations repeated.
8. If the system maintains its pressure, discharge and evacuate the system prior to charging.

Refrigeration system - To charge
Before charging the system, it is necessary to evacuate and sweep the system.
1. Attach a cylinder of Refrigerant 12 to the appropriate connection on the vacuum pump apparatus.
2. Open the cylinder valve and purge the line between the cylinder and the vacuum pump apparatus.
3. Suspend the cylinder on a spring balance and note the weight.

Note
If a 'charging station' or other refrigeration system servicing equipment is used, follow the manufacturers instructions.

4. Open the tap on the vacuum pump apparatus to enable the refrigerant to flow into the system.
5. Ensure that the parking brake is applied and that the gear selector is in either 'Park' or 'Neutral'.
6. Start the engine and run it at 1000 to 1250 rpm.
7. Move both temperature selector dials to the 'Full cold' position. Open the circular facia outlets and the rectangular outlets: move the air conditioning function switch to HIGH.
8. Allow 0,45 kg (1 lb) of refrigerant to flow into the system, close the tap on the vacuum pump apparatus and switch off the engine.
9. Test for leaks in the system with an electrical leak detector. If the system is free of leaks, continue the charging operation and increase the weight of refrigerant in the system by 1,02 kg (2,25 lb) to make the total weight of refrigerant added equal to 1,47 kg (3.25 lb).
10. If a leak is detected it must be rectified and the evacuation and charging operation repeated.

Note
The presence of bubbles or foam passing through the receiver/drier sight glass is not a reliable indication of refrigerant deficiency if the ambient temperature is below 24°C (75°F).

11. Close the tap on the vacuum apparatus and unscrew the connection to the valve of the service connection on the suction throttling valve and fit the valve cap.
12. Check the system for leaks.

Printed in England
© Rolls-Royce Motors Limited 1978
March 1978
T.S.D. 4200

Oil level - refrigeration system

The refrigeration pump is originally filled with 310ml (10.5 ounces US of 'Frigidaire' 525 viscosity refrigeration oil and servicing is not normally required. However, during normal operation, a small amount of oil combines with the refrigerant and circulates round the system.

If any oil escapes from the system due to leakage, discharge of the refrigerant or replacement of a component, it must be replaced because it is important that the amount of oil in the system is always correct.

Insufficient oil in the system will result in inadequate lubrication of the compressor and too much oil circulating with refrigerant will reduce the cooling capacity of the system.

The procedure for correcting the oil level is as follows:

1. Ensure that the parking brake is firmly applied and the transmission is in either 'neutral' or 'Park'.
2. Run the engine at 1000 to 1500 rpm for ten minutes with the ACU temperature selector dials turned to the 'maximum cold' position and set to AUTO, this will allow the oil to be distributed throughout the system.
3. Stop the engine, discharge the refrigerant and remove the compressor.
4. Position the compressor horizontally with the drain plug pointing downwards.
5. Remove the drain plug and allow the oil to drain into a clean measuring container; measure and discard the oil.
6. If the oil drained from the compressor is more than 125 ml (4 ozs US,) top-up the compressor with an equivalent amount of new compressor oil.
7. If the oil drained from the compressor is less than 125 ml (4 ozs US) and a major oil loss has occurred, fill the compressor with 185 ml (6 ozs US) of compressor oil.
8. If the compressor has been overhauled, increase the quantities given in the two previous paragraphs by 30 ml (1 0 oz US).
9. If a new compressor is to be fitted, the oil contained in it should be drained into a clean measuring cylinder and the quantity adjusted until the amount is equivalent to that drained from the old compressor.

This amount should then be poured into the new compressor, plus any oil lost during rapid discharge of the refrigerant.

Replacing components

Whenever a refrigeration system component is replaced, measured quantities of approved refrigerant oil must be added to the component to ensure that the total amount of oil in the system is maintained.

Oil should be added in the following quantities plus any lost through rapid discharge of the system:

Evaporator - 90 ml (3 ozs US)
Condenser - 30 ml (1 oz US)
Receiver/Drier - 30 ml (1 oz US)

Low refrigerant charge protector system

System description

The low refrigerant charge protector system consists of a superheat shutoff switch located in the rear head of the compressor, connected in series by an electrical lead to the thermal fuse which is basically a temperature sensitive fuse link between the air conditioning system ambient switch and the clutch coil connection.

During normal air conditioning system operating conditions, current flows through the air conditioner switch, the ambient switch, and through the thermal fuse to the clutch coil to actuate the compressor clutch. Should a partial or total loss of refrigerant in the system cause the superheat switch to sense low system pressure and a high suction gas temperature, the superheat switch contacts will close. When the contacts close, current flows to energize the resistance type heater in the thermal fuse. The resultant heat warms the fuse link to its specific melt temperature, thus opening the circuit to the compressor clutch coil. Compressor operation ceases and compressor damage due to a loss of refrigerant charge is prevented. The cause of the refrigerant loss must be corrected and the system charged prior to replacing the thermal fuse.

Section C3

Component description (excluding refrigeration) Contents

	Page
Function switch	C3 - 3
Temperature selectors	C3 - 3
Temperature sensors	C3 - 3
Servo modules	C3 - 4
Temperature blend flap servos	C3 - 4
Recirculation flaps & actuators	C3 - 5
Lower quantity flap and actuator	C3 - 5
Mode flap and actuator	C3 - 6
Water tap	C3 - 6
Interlock and Inhibit systems	C3 - 6
Fan speed module	C3 - 6
Voltage stabiliser	C3 - 6

Printed in England

© Rolls-Royce Motors Limited 1978

March 1978

T.S.D. 4200

Printed in England
© Rolls-Royce Motors Limited 1978
March 1978
T.S.D. 4200

Section C3

Component description (excluding refrigeration)

Function switch (see Fig. C7)
The switch has five positions marked OFF, LOW, AUTO, HIGH and DEF. The function of the switch in each position is as follows:

OFF
Everything concerning the A.C.U. is off and fresh air is prevented from entering the car because the recirculation flaps are in the recirculation position. When OFF is selected from any other position, the recirculation flaps move to the recirculation position, all other flaps are immediately immobilised and the fans are switched off.

Note
When the recirculation flaps are in the recirculation position there is a small bleed of fresh air into the car.

AUTO
The A.C.U. operates fully automatically with variable fan speed which is dependent upon servo position.

LOW
The A.C.U. operates automically but the fans rotate at a fixed minimum speed.

HIGH
The A.C.U. operates automatically but the fans rotate at a fixed maximum speed.

DEF (Defrost)
The upper and lower temperature flaps move to full hot, the lower quantity flap is closed, the fans rotate at maximum speed even if the coolant is cold and the mode flap directs all air, hot or cold, to the windscreen.

Temperature selectors (see Fig. C7)
These are two infinitely variable control knobs which control the upper car temperature and lower car temperature. Each knob operates a potentiometer which is connected as a variable resistance such that the current flow through it varies with angular position. This current signal is used in conjunction with the current signal from temperature sensors to determine the required temperature flap position. The two potentiometers are dissimilar and are therefore not interchangeable.

Temperature sensors (see Figs. C8, C9 and C10)
There are two sets of these, termed sensor chains, and are devices that vary in resistance very predictably as the temperature varies, therefore the current through them is related to temperature.

The sensor chain for the upper system air comprises three sensors, one in the centre of the top roll to measure the heat radiated by the sun in the car, one under the right-hand side of the rear bumper to measure outside air temperature and one on the left-hand cantrail to measure upper car temperature.

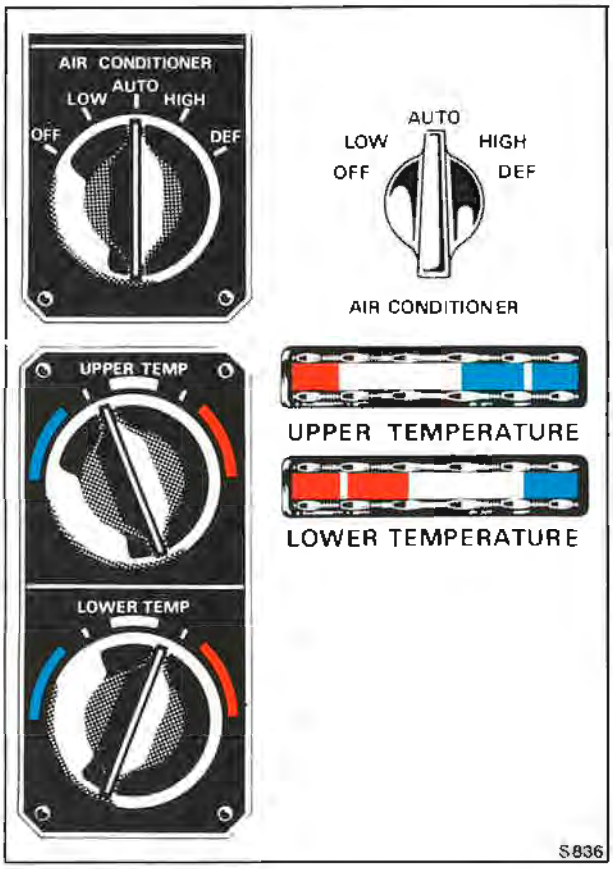

Fig. C7 Function switches and preferred temperature settings

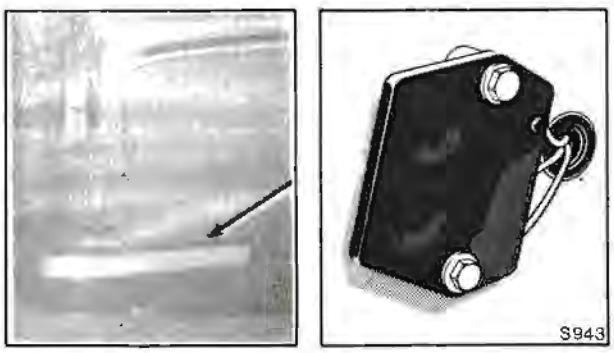

Fig. C8 Outside air temperature sensor

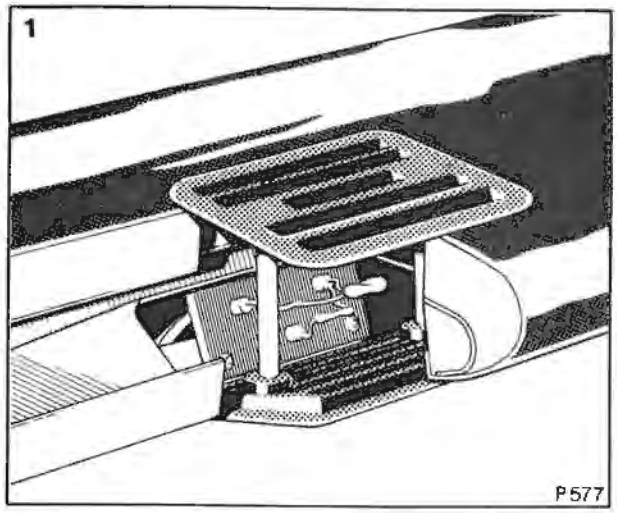

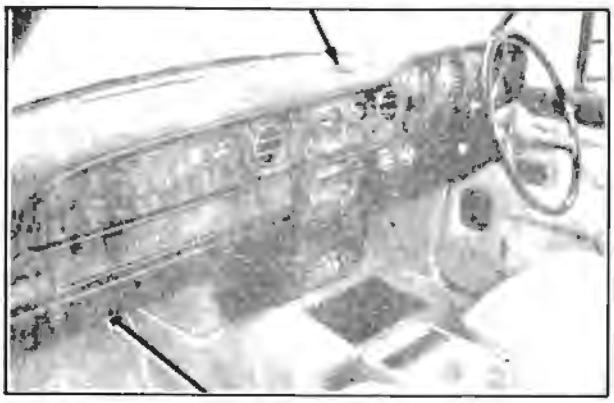

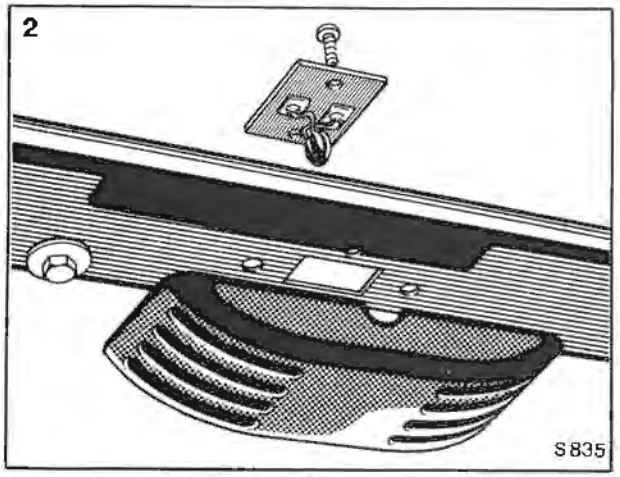

Fig. C9 1. Solar sensor 2. Knee-roll sensor

The sensor chain for the lower system air comprises two sensors, one on the front passenger's knee roll to measure lower car temperature and one under the right-hand rear bumper to measure outside air temperature.

The current signal from each sensor chain is used in conjunction with the current signal from the respective temperature selector to determine the required temperature flap position by the servo module.

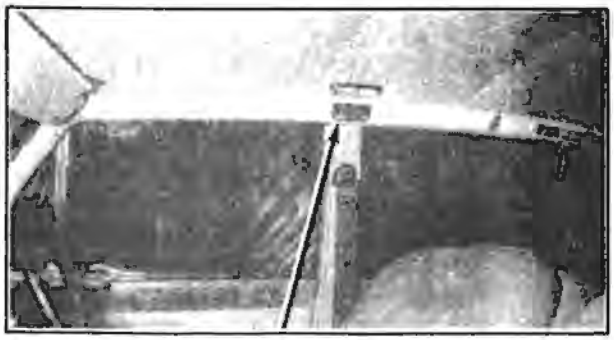

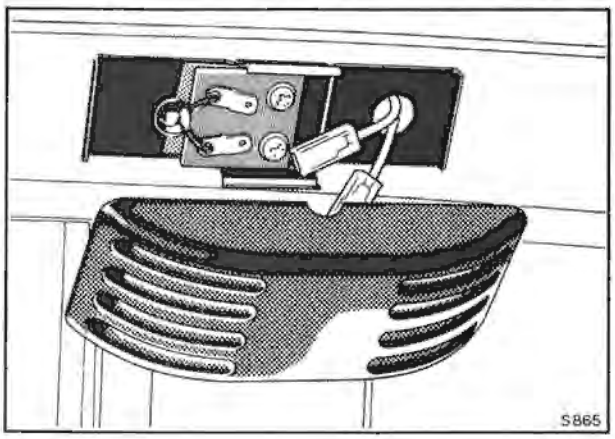

Fig. C10 Cantrail sensor

Servo modules (Upper and lower system. Fig. C11)
The modules convert the temperature-related current signals obtained from the temperature selectors and sensors into switching signals which are used to operate relays that are mounted on the modules.

There are two relays for each servo, one of which makes the temperature blend flap move in the 'cold' direction and the other makes the blend flap move in the 'hot' direction. Signals, which are related to blend flap servo position, are fed back to the servo module from the servo and are used to switch off the relays and thereby stop the blend flap in a position determined by the module. The servo modules are identical and are therefore interchangeable, they are mounted on the blend flap servos. If the modules are interchanged, the system must be recalibrated.

Temperature blend flap servos (Upper and lower systems see Fig. C11)
The servos drive the temperature blend flaps and also provide most of the signals to activate the other automatic functions within the A.C.U. There are two servos, one for the lower system air and one for the upper system air. Both are located on the transmission tunnel beneath the instrument panel.

The upper servo controls the temperature and quantity of air from the windscreen and facia outlets, the lower servo controls the temperature and quantity of the air from the front and rear foot wells.

The systems controlled by the upper servo are: recirculation actuators, lower quantity actuator, mode flap actuator, upper temperature blend flap,

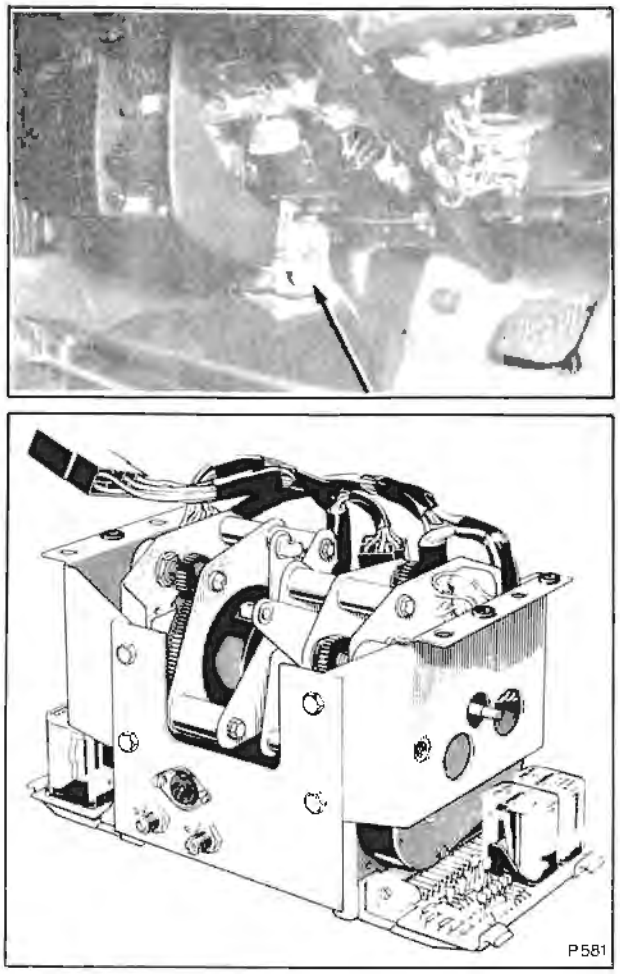

Fig. C11 Servo assembly

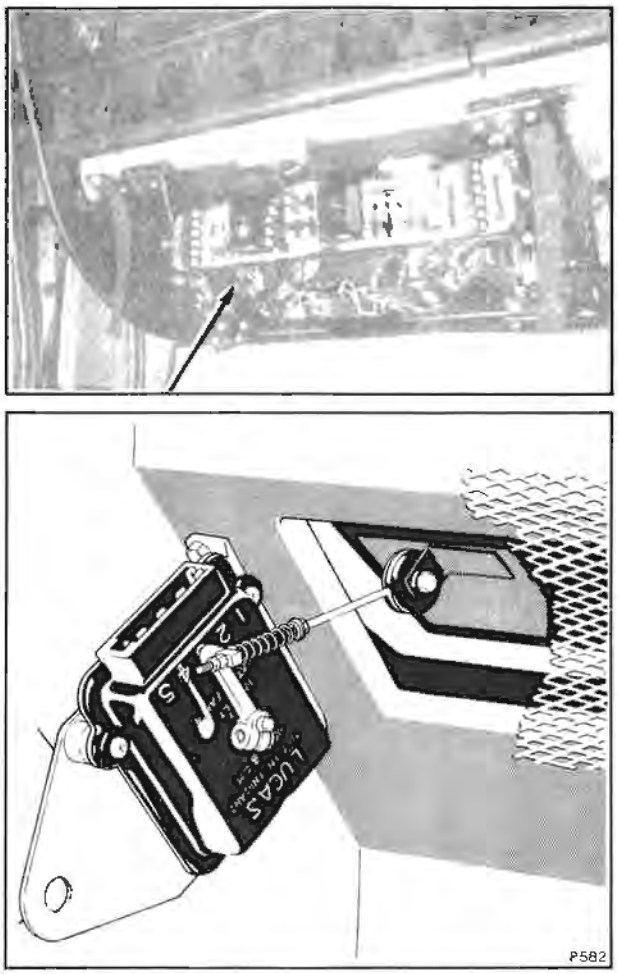

Fig. C12 Recirculation actuator

fan speed and rear window demister. The systems operated by the lower servo are: lower temperature blend flap, water tap and fan speed.

Recirculation actuators and flaps (see Fig. C12)
There are two of these, one on each side of the car beneath the instrument panel. Each actuator has two positions, one of which directs fresh air from outside the car through the A.C.U. and the other position recirculates air from within the car.

The actuators are activated by a micro-switch in the upper servo which signals full recirculation when the servo is at the full cold position and full fresh air when the servo is in any position except full cold. This system is overridden when the A.C.U. is switched off, the recirculation actuators then move the flaps to the full recirculation position.

Lower quantity flap and actuator (see Fig. C13)
The actuator has two positions which either opens or closes the lower quantity flap. The flap is closed when the upper servo position is between the 'full cold' and 10% towards the 'full hot' position. If DEFROST has been selected on the function switch, this is overridden and the flap is closed to enable all available air to be directed to the upper system. (The flap is also closed whenever the coolant temperature is below 50 °C).

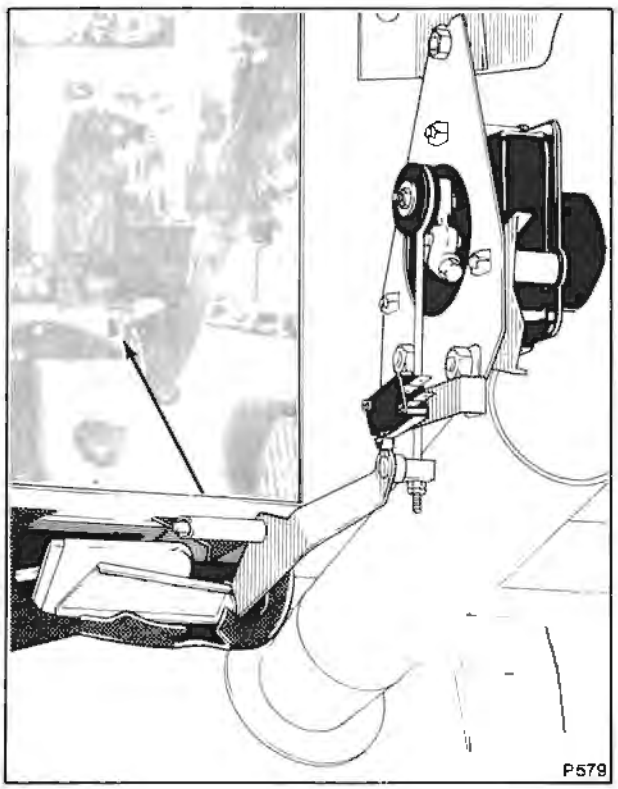

Fig. C13 Lower quantity flap and actuator

Printed in England
© Rolls-Royce Motors Limited 1978
March 1978
T.S.D. 4200

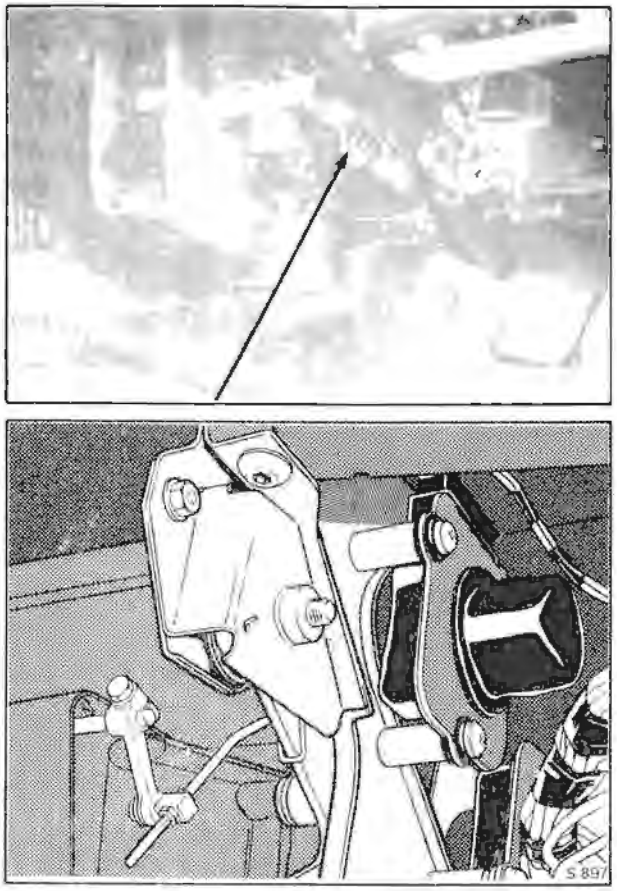

Fig. C14 Mode flap and actuator (Right-hand drive)

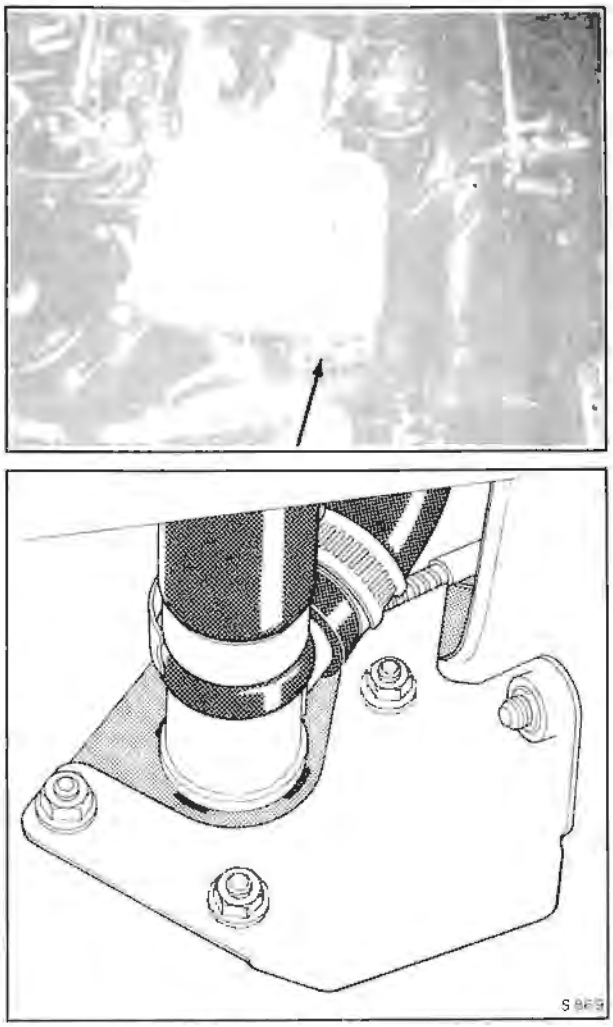

Fig. C15 Water tap

Mode flap and actuator (see Fig. C14)

The actuator is mounted on the heater box behind the instrument panel. It operates the mode flap which has two positions, one which directs all the upper system air to the windscreen outlets and the other position directs all the upper system air to the facia outlets.

With an upper servo travel from 'full cold' to 25% hot, the airflow is directed to the facia outlets, from 25% to 'full hot' the airflow is to the screen outlets. A microswitch on the upper servo senses the 25% position and signals the mode actuator accordingly.

Water tap (see Fig. C15)

The water tap is in the engine cooling system and is connected to a crank on the lower servo by a bowden cable. The tap opens progressively as the lower servo moves from the 'cold' position to the 'hot' position.

Interlock and Inhibit systems

The interlock system is a system of relays and diodes that prevents the ACU from operating until the car engine is running to allow all available battery power towards starting the car during engine cranking.

The inhibit system prevents the fans from operating until the engine coolant temperature has reached 44 °C except when the mode flap is in the 'facia' position or DEFROST has been selected. Coolant temperature is sensed by the fan delay thermostat which is situated in the coolant thermostat housing.

Fan speed module (see Fig. C16)

The fan speed module infinitely varies the fan speed by switching the supply voltage on and off 150 times per second, the speed of the fan is determined by the ratio of 'time on' to 'time off'.

Fan speed is related to servo position, with both servos in the mid-position the fans run at minimum speed but as either or both servos move towards the 'full hot' or 'full cold' position the fan speed increases progressively.

Voltage stabiliser (see Fig. C16)

The voltage stabiliser supplies the servos with three stabilised voltages, two 7.0v supplies to the servo motors and a 9.1v supply to the servo modules to make them insensitive to car system voltage.

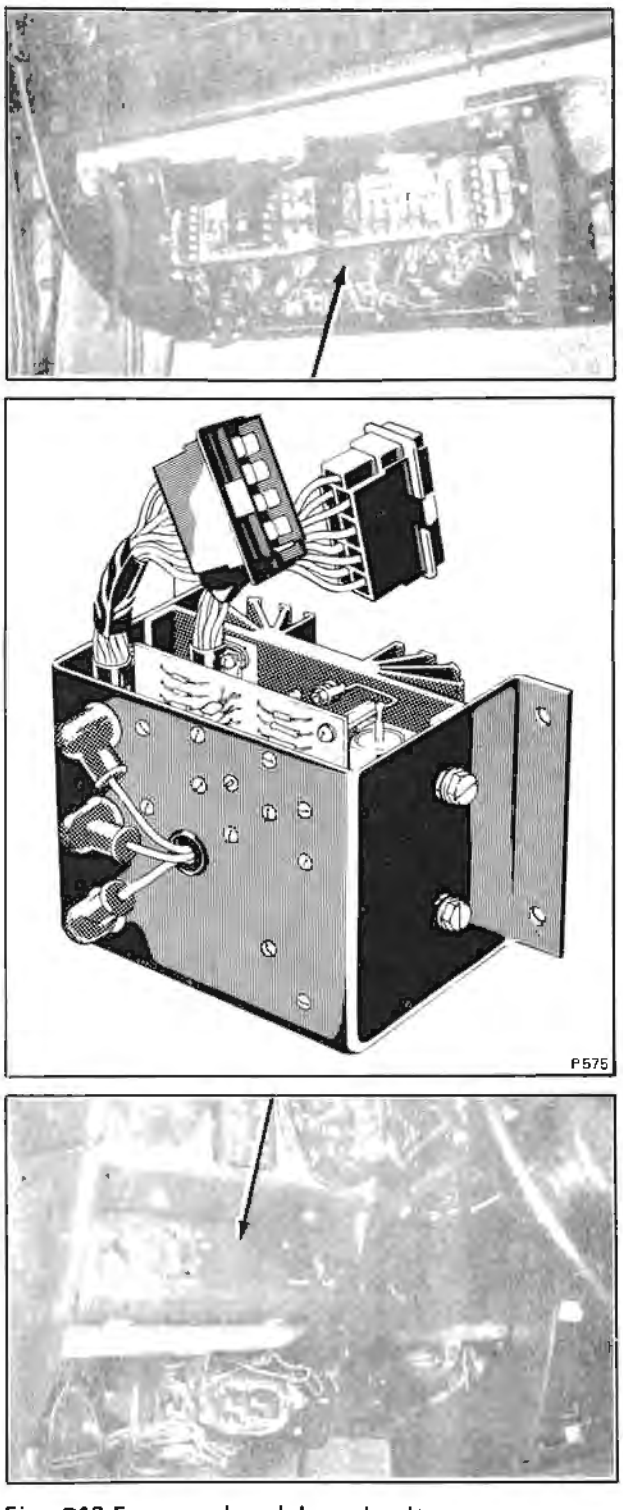

Fig. C16 Fan speed module and voltage stabiliser
Upper-right-hand drive
Lower-left-hand drive

The voltage stabiliser is assembled with the fan speed module to form one unit but they are independent of each other and may be easily separated and replaced as individual units.

Printed in England
© Rolls-Royce Motors Limited 1978

Section C4

Interlock and Inhibit systems

Interlock (see Fig. C22)

The interlock circuit prevents the ACU from operating until the car engine is running to allow all battery power to be available to start the car during engine cranking.

Sequence of operations

1. The fan and compressor fuse supplies voltage to contact C2 of the fan and compressor relay at all times.

2. When the ignition is switched on and the ACU function switch is set to LOW, AUTO, HIGH or DEFROST, the coil of the fan and compressor relay is energised, the earth path being provided by the low resistance winding of the starter motor.

3. Contact C2 and C1 are 'made' which connects the live feed from fan and compressor relay to contact C2 of the servo isolation relay and the fan speed module.

4. The servo isolation relay coil is also energised because the oil pressure switch is closed (no oil pressure). Contact C2 is connected to C1 thereby isolating the live feed from the servos and voltage stabiliser.

5. When the starter motor is operated it effectively de-energises the coil of the fan and compressor relay, contact C1 and C2 are broken which disconnect the feed from the fan and compressor fuse. This allows all available battery power to start the car.

6. When the engine has started and the oil pressure has built up, the coil of the fan and compressor relay is again energised, remaking C1/C2 and the coil of the servo isolation relay is de-energised which connects the live feed from C2 to C3 which completes the circuit for the servos and voltage stabiliser.

Note

The fans will not operate until the fan inhibit cycle is completed.

Inhibit (see Fig. C23)

The inhibit circuit prevents the compressor and fans from operating under the following circumstances:

1. The compressor is disconnected when the ambient temperature is below 1°C.

2. The compressor and fans are inhibited when the ACU is operating in the 'screen' mode (except when DEFROST has been selected), until the engine coolant is above 44°C and the lower quantity flap is fully open. This prevents cold air from being blown into the car when hot air is required and also prevents a sudden surge of air to the screen causing considerable noise which, as well as being undesirable, would also be unexpected.

3. The fans are inhibited for 13 seconds after the starter motor has operated to allow the compressor to freeze any condensed water vapour in the system and so prevent moist air from misting the windscreen in the screen mode.

In (1), the compressor thermostat, which is situated in the evaporator box, 'breaks' below 1 °C and disconnects the live feed from the compressor clutch thereby disconnecting the compressor.

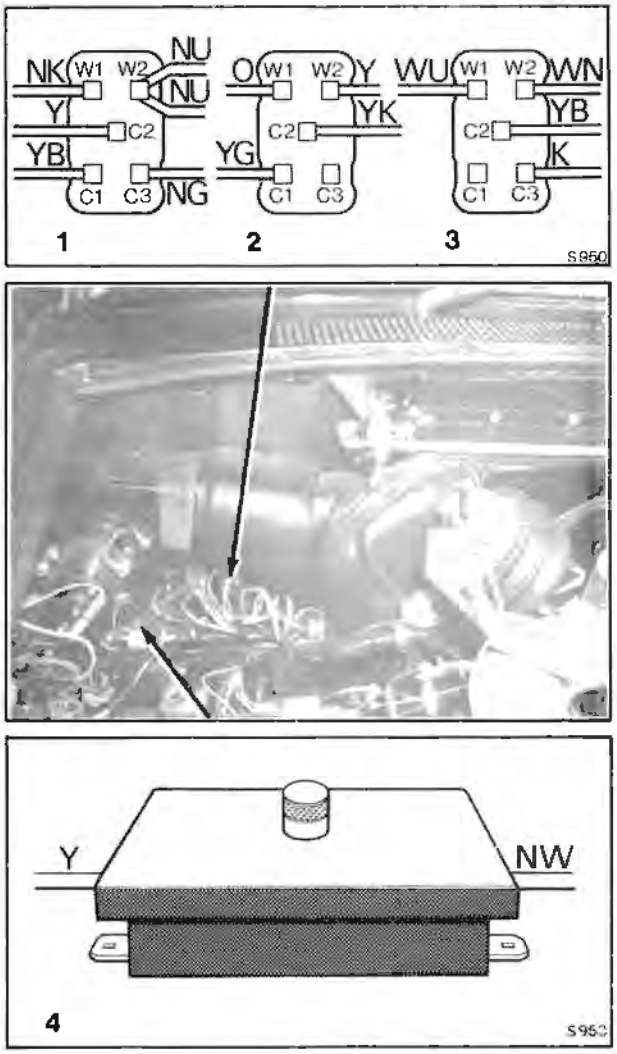

Fig. C17 1. Fan and compressor relay
2. Fan delay relay
3. Servo isolation relay
4. Fan and compressor fuse

Printed in England
© Rolls-Royce Motors Limited 1978
August 1978
T.S.D. 4200

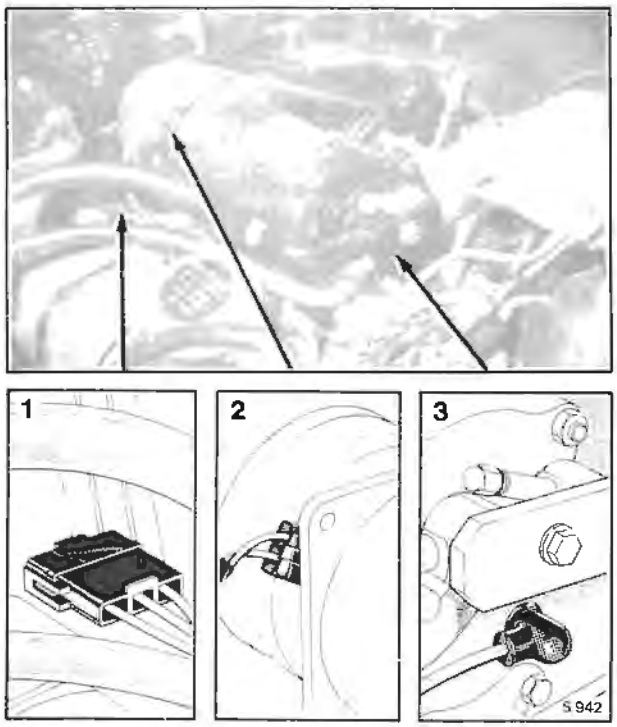

Fig. C18 Compressor protection device
1 Compressor safety fuse
2 Compressor clutch thermostat
3 Compressor temperature sensor

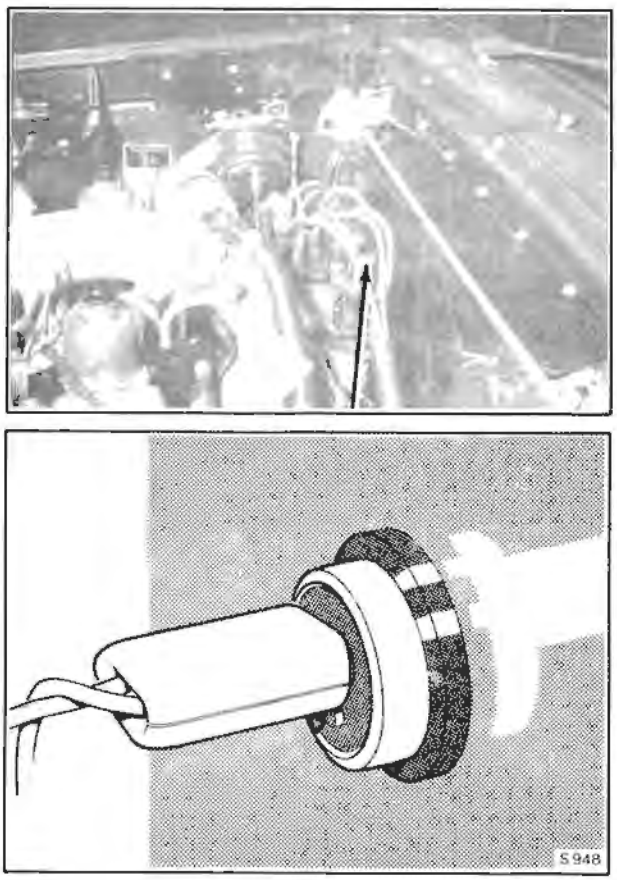

Fig. C19 Compressor ambient thermostat

In (2), the fan speed module and compressor are inoperative whenever the coil of the fan switch-off relay is energised. This is achieved by having the common contact (C2) of the relay connected to earth, when the coil is energised it removes the earth path from the compressor and effectively puts an earth path on the fan speed power circuit therefore preventing the fans from operating. When the relay coil is de-energised the earth path is removed and the compressor earth path is restored.

The coil of the fan switch-off relay has two earth paths, one when the oil pressure switch is closed (ie. no oil pressure) and also when the coil of the fan delay relay is energised with either the fan delay thermostat closed (below 44°C) or the lower quantity flap miscroswitch closed. This second earth path (via the contacts of the fan delay relay) provides the necessary signal to hold off the fans and compressor when the coolant is below 44°C and the mode is to 'screen' and the lower quantity flap is not fully open. It also prevents the fans from being inhibited when DEFROST has been selected.The live feed to energise the coil of the fan delay relay is switched by the 25% mode change microswitch in the upper servo. When the mode is to 'screen' the orange/purple cable from the upper servo is 'live' which feeds the fan delay relay coil via the diode block and yellow cable via toeboard socket D to W2. The earth path for the relay coil is through the ACU switch to the left-hand 'A' post earth (except when DEFROST has been selected).

In addition, the lower quantity flap microswitch initiates a fixed sequence of events when the fan delay thermostat opens. When the coolant tempe-

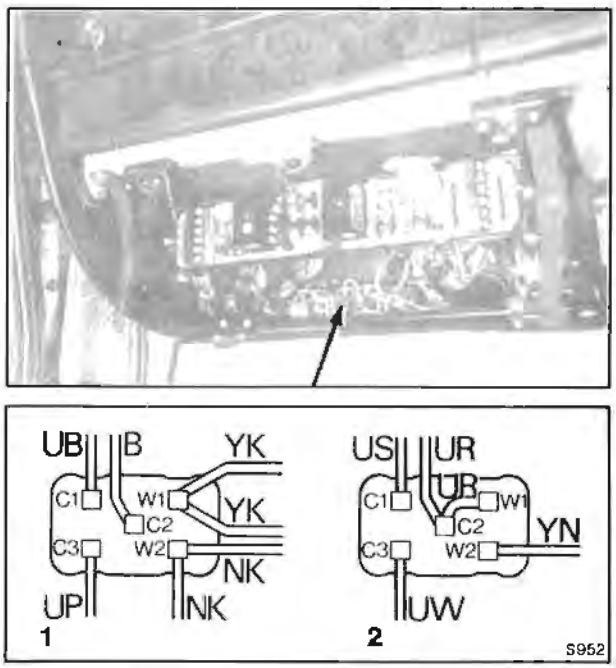

Fig. C20 1. Fan switch-off relay
2. Lower quantity relay
Right-hand drive cars

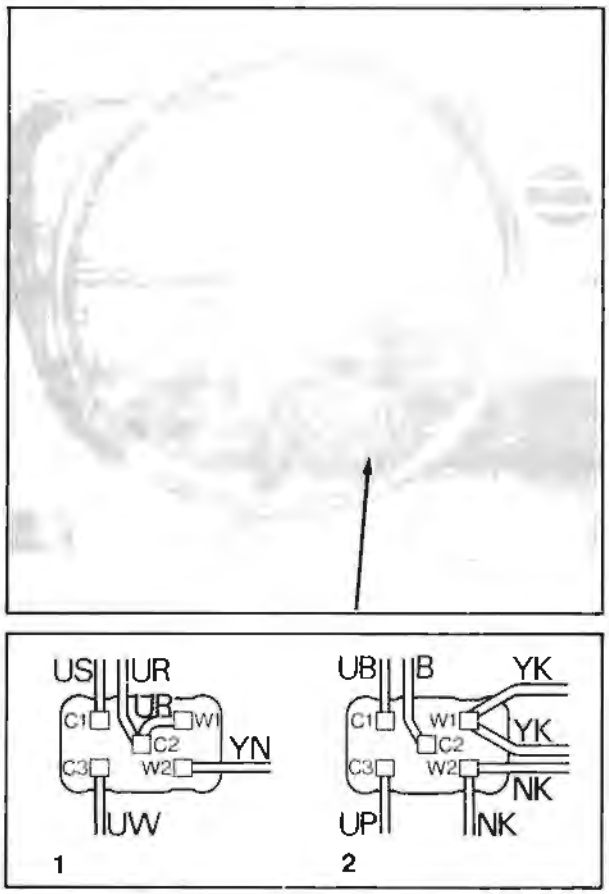

Fig. C21 1. Lower quantity relay
2. Fan switch-off relay
Left-hand drive cars

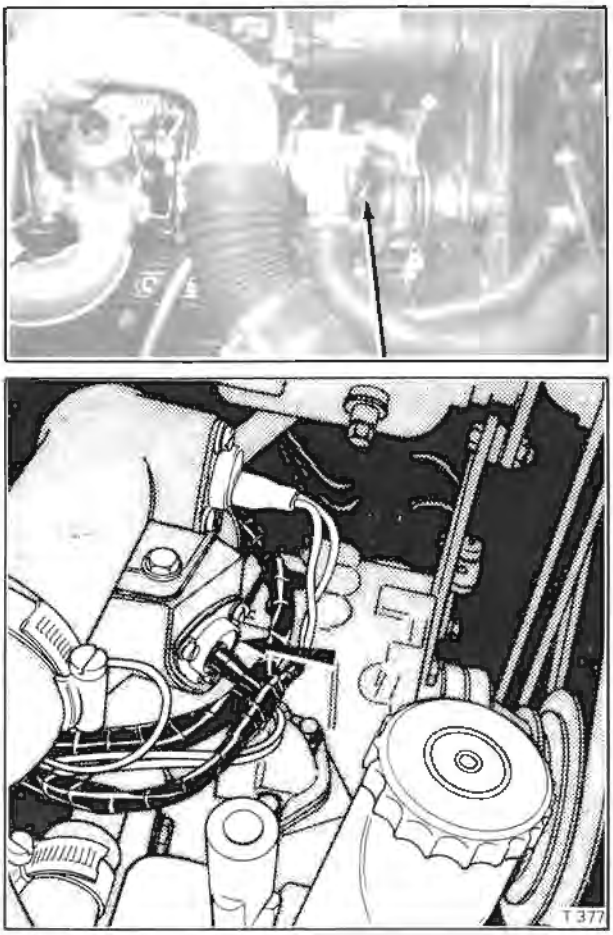

Fig. C22 Fan delay thermostat

rature is below 44 °C, the fan delay thermostat not only inhibits the fans and compressor but also energises the coil of the lower quantity relay which keeps the lower quantity flap closed. As soon as the coolant exceeds 44 °C the thermostat opens which disconnects the earth from the lower quantity relay and allows the lower quantity flap to open, when fully open it opens the lower quantity flap microswitch thereby allowing the fans and compressor to operate. Therefore, the fans do not operate until the lower quantity flap is fully open.

In (3), to prevent the fans operating when the car is started with a 'hot' engine which could cause misting of the windscreen, a 13 second delay is initiated by connecting the fan speed module to the starter motor (brown-blue cable) which activates a 13 second delay circuit in the module each time the starter motor is used. This allows the compressor to freeze any condensed water vapour in the system so preventing any misting of the windscreen.

Note

The diode between the fan switch-off relay coil and oil pressure switch prevents the warning lamp from finding an earth path through the fan switch-off relay coil, fan and compressor relay coil and starter motor. If this diode fails short circuit, the oil pressure warning light would glow dimly with the ACU switched off.

Printed in England
© Rolls-Royce Motors Limited 1978
August 1978
T.S.D. 4200

Interlock circuit

Schematic wiring diagram
Fig. C22

Printed in England
© Rolls-Royce Motors Limited 1978
T.S.D. 4200 March 1978

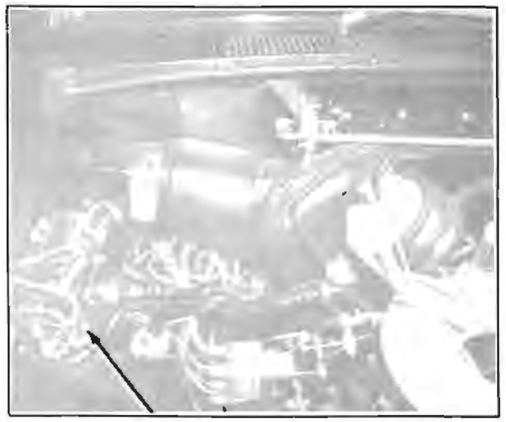

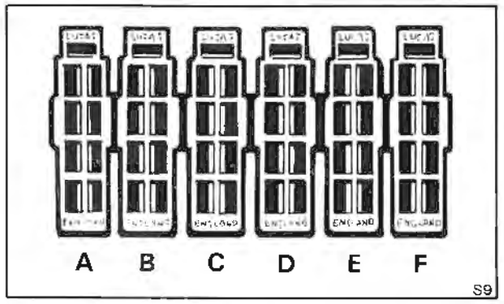

Toeboard sockets

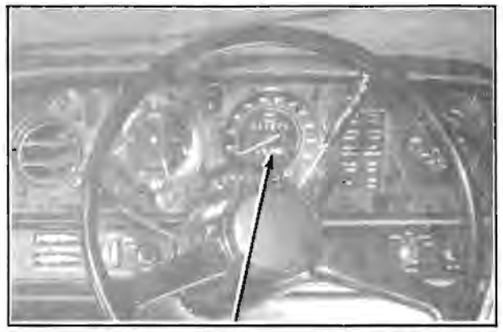

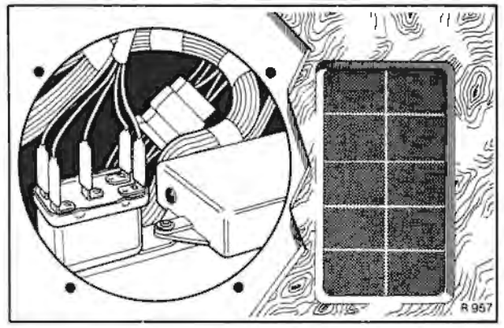

Location of main distribution loom plug (MD)

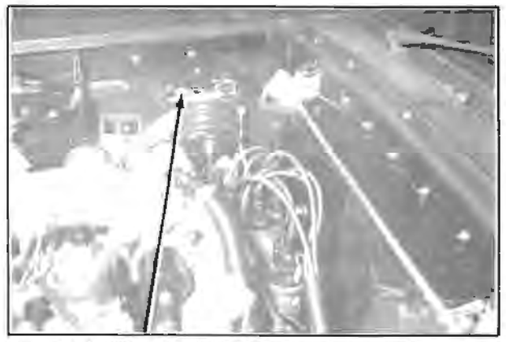

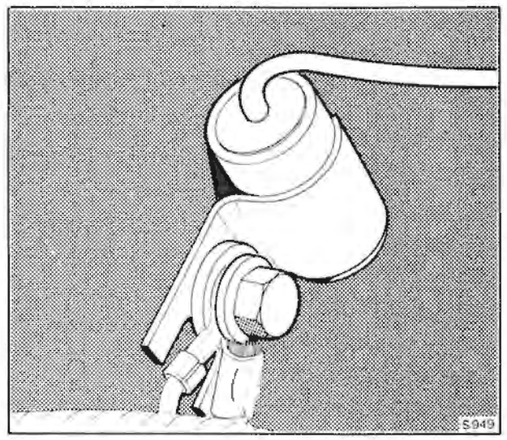

Right-hand valance earth

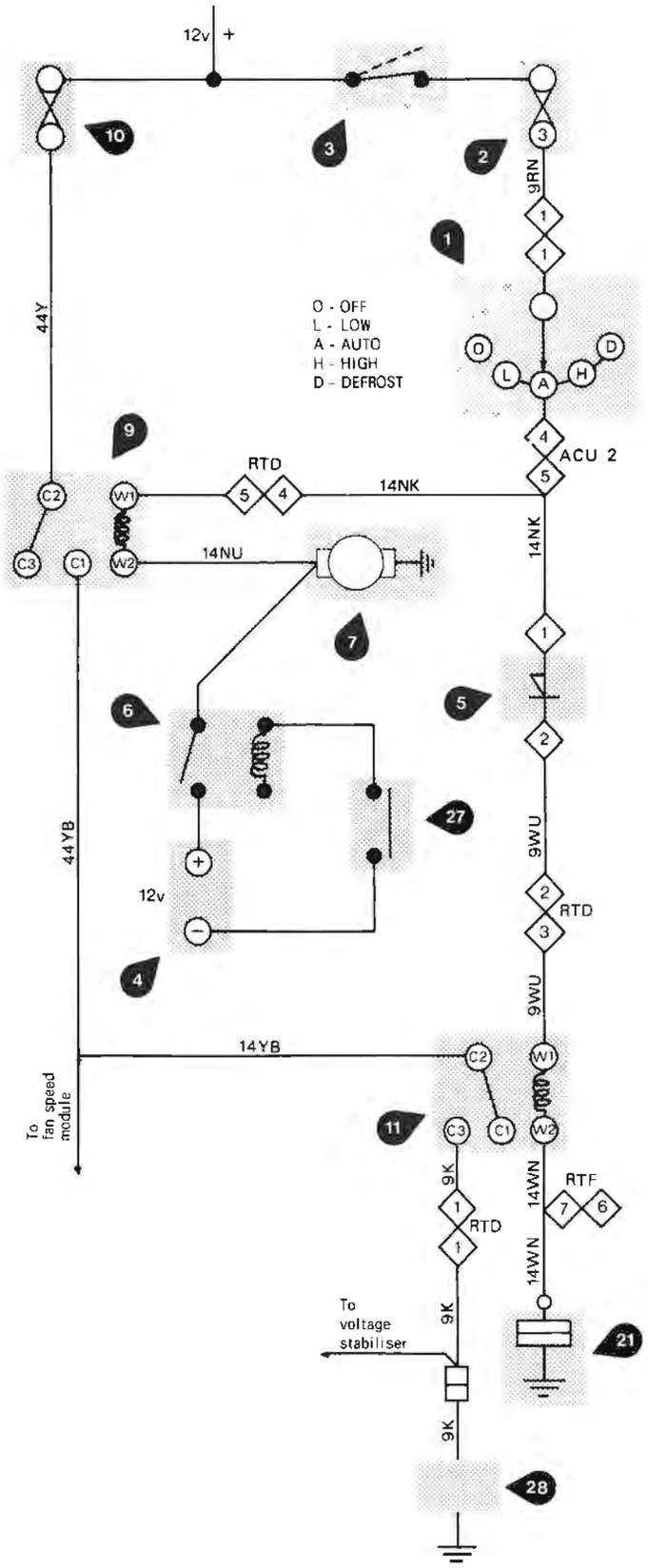

Components

1 ACU function switch
2 Fuse number 3
3 Ignition switch
4 Battery
5 ACU diode board
6 Starter relay
7 Starter motor
8 Fan speed module
9 Fan and compressor relay
10 Fan and compressor fuse
11 Servo isolation relay
12 Upper servo microswitches
13 Compressor clutch thermostat
14 Compressor protection unit
15 Compressor clutch
16 Compressor protection sensor
17 Lower quantity actuator
18 Lower quantity flap microswitch
19 Fan switch-off relay
20 Fan delay relay
21 Oil pressure switch
22 Left-hand 'A' post earth
23 Fan delay thermostat
24 Right-hand valance earth
25 Lower quantity relay
26 Right-hand 'A' post earth
27 Starter switch
28 Servos

Inhibit circuit

Schematic wiring diagram
Fig. C23

T.S.D. 4200 March 1978
© Rolls-Royce Motors Limited 1978
Printed in England
T134

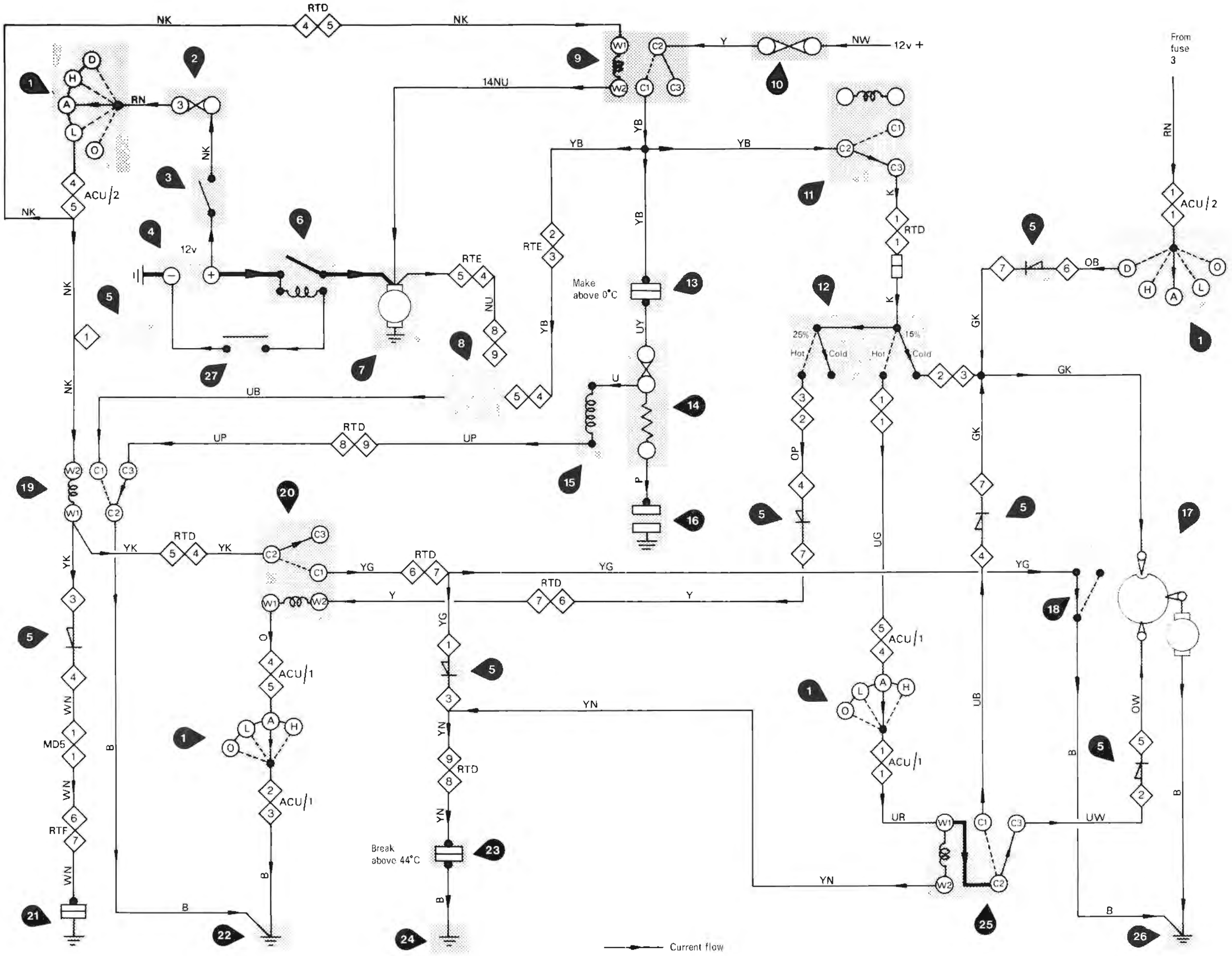

Section C5

Component removal and assembly

Contents

	Page
Circular facia outlet	C5 - 3
Circular facia outlet grille	C5 - 3
Demister outlet grille	C5 - 3
Scuttle intake grille	C5 - 3
Condenser matrix	C5 - 3
Receiver/drier	C5 - 5
Coolant tap and actuating cable	C5 - 5
Heater and control box	C5 - 5
Heater matrix	C5 - 7
Expansion valve	C5 - 7
Suction throttling valve	C5 - 7
Evaporator box	C5 - 7
Distribution box assembly	C5 - 9
Lower quantity flap and actuator	C5 - 11
Mode flap and actuator	C5 - 11
Recirculation flap	C5 - 11
Recirculation flap actuator	C5 - 14
Servo assembly	C5 - 14
Servo module	C5 - 14
Voltage stabiliser and fan speed module	C5 - 14
A.C.U. diode board	C5 - 14
A.C.U. relays	C5 - 14
Compressor ambient thermostat	C5 - 14
Fan delay thermostat	C5 - 15
Fan motors	C5 - 15
Sensors	C5 - 15
Compressor	C5 - 15

Printed in England

© Rolls-Royce Motors Limited 1978

March 1978

T.S.D. 4200

Section C5

Component removal and assembly

Circular facia outlet - To remove
1. Remove the facia panel (see Chapter S).
2. Remove the top roll (see Chapter S).
3. Remove the demister panel (see Chapter S).
4. Unscrew the screws retaining the illumination panel above the assembly: remove the illumination panel. (Camargue only).
5. Unscrew and remove the screws that retain the facia outlet assembly.
6. Withdraw the complete circular facia outlet (including the grille assembly) through the top roll aperature.

Circular facia outlet - To fit
Fit the assembly by reversing the procedure given for removal, noting the following points.
1. Ensure that the ducting and convoluted feed hose are correctly positioned relative to the distribution box and instrument panel.

Circular facia outlet grille - To remove
The circular facia outlet grille can be removed independently of the complete assembly as follows.
1. Remove the facia panel (see Chapter S).
2. Unscrew and remove the screws retaining the illumination panel above the circular facia outlet, remove the illumination panel.
3. Unscrew and remove the screws that secure the grille retaining swivel ring, collect the three tension adjusting springs.
4. Remove the ring and carefully withdraw the grille.

Circular facia outlet grille - To fit
Fit the grille by reversing the procedure given for removal, noting the following points.
1. Fit the tension adjusting spring between the lugs on the retainer and housing, hold in place with the three Pozidrive screws. Tighten the screws until the grille will just move under a torque of 0,18 kg. cm. to 0,36 kg. cm. (1 lb. in. to 2 lb. in.).

Demister outlet grille - To remove
The two demister outlet grilles are retained in position by eight small clips moulded as an integral part of each outlet grille.
1. Position a small thin tool (e.g. a steel rule) between the demister outlet grille and the demister body panel.
2. Prise the rear of the demister grille towards its centre in an upwards direction. This action will release the retaining clips.
3. Carefully work around the demister grille as described in Operation 2, until the grille can be lifted out of position.

Demister outlet grille - To fit
Fit the demister outlet grille by reversing the procedure given for removal, noting the following points.
1. Ensure that the outlet grille is fitted the correct way round (with the vanes sloping upwards towards the rear), otherwise windscreen demisting will be impaired.

Scuttle intake grille - To remove
1. Position the windscreen wiper blades in the vertical position. To achieve this, switch on the ignition and operate the wash/wipe system. Switch off the ignition when the wiper blades are passing the vertical position.
2. Unscrew the setscrews securing the intake grille panel in position: the setscrews are situated along the forward edge of the panel.
3. Pull the intake grille panel forward until it is clear of the retaining pins situated along the rear edge, lift up the panel.
4. Pull the windscreen washer tubes from the jet connectors and remove the intake panel from the car.
5. Unscrew and remove the wing nut securing the jet assemblies to the intake grille.
6. Remove the nuts securing the wire mesh grilles to the underside of the intake.
7. Withdraw the foam elements.

Condenser matrix - To remove (see Fig. C24)
When removing the condenser, care must be taken not to damage either the matrix or the sensor assembly fitted in front of the matrix.
1. Discharge the refrigerant from the system.
2. Remove the radiator grille (see Chapter S).
3. Unscrew the nuts securing the air deflector panel that carries the outside temperature sensor. Ease the panel from its position, taking care not to damage the sensor. Access can now be gained to the two refrigeration pipe connections situated above the matrix.
4. Disconnect both these refrigeration pipe connections (the high pressure vapour line from the compressor to the condenser and the high pressure liquid line to the receiver/drier).
5. Unscrew and remove the two setscrews from the bottom mountings of the condenser matrix. Collect the washer from under the head of each setscrew.
6. Unscrew and remove the two setscrews from the condenser matrix top mountings, one on each side of the matrix. Collect the washer from under the head of each setscrew.

Note
Carefully support the condenser matrix before finally removing the setscrews from the top mountings.
7. Withdraw the matrix forwards.

Printed in England

© Rolls-Royce Motors Limited 1978

March 1978

T.S.D. 4200

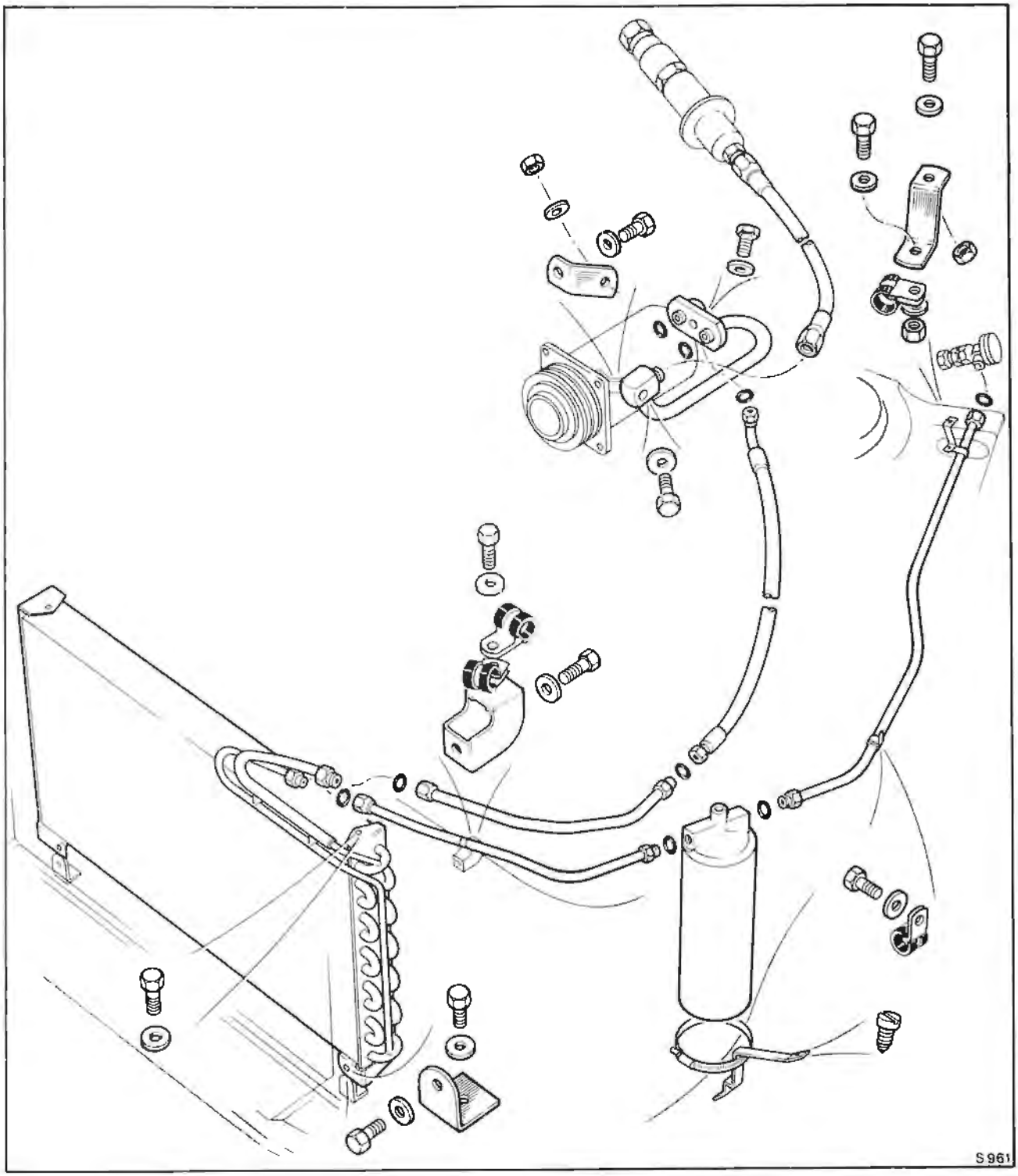

Fig. C24 Refrigeration components

Condenser matrix - To fit

Fit the condenser matrix by reversing the procedure given for removal, noting the following points.

1. When fitting the setscrews to the bottom mountings it may be necessary to slacken the mountings securing setscrews to assist alignment. The setscrews should be tightened again after alignment.

Receiver/Drier - To remove

1. Discharge the refrigeration system.
2. Disconnect the high pressure liquid inlet and outlet pipes.
3. Slacken the worm drive clip securing the receiver/drier, withdraw the unit.

Coolant tap - To remove (see Fig. C26)

The coolant tap is situated beneath the hydraulic reservoir and is removed as follows.

1. Ensure that the lower servo is in the full cold position.
2. Drain the engine coolant (see Chapter L).
3. Unscrew the two worm drive clips from the two coolant hose clips. Withdraw the hoses.
4. Unscrew the two 7/16 in. A/F setscrews securing the tap assembly to the rear hydraulic reservoir bracket.
5. Turn the assembly over and slacken the clamping screw retaining the inner wire of the actuating cable to the tap.
6. Unscrew and remove the nut securing the outer cable to the tap bracket. Release the clamp assembly from the tap.
7. Withdraw the coolant tap assembly.

Coolant tap - To fit

Fit the coolant tap by reversing the procedure given for removal, noting the following point.

1. Ensure that the coolant tap actuating cable is set as described in Coolant tap cable - To fit.

Coolant tap actuating cable - To remove (see Fig. C25)

1. Ensure that the lower servo is set in the full cold position.
2. Release the servo end of the inner and outer cable, collect the distance piece from behind the outer cable clamp.
3. Remove the coolant tap and release the tap end of the cable.
4. Withdraw the actuating cable.

Coolant tap actuating cable - To fit

1. Ensure that the lower servo is set in the full cold position.
2. Fit the rubber sleeves to the outer cable.
3. Fit the cable assembly to the coolant tap as shown in fig. C25.
4. Feed the cable through the grommet to the inside of the car, the cable should pass over the right-hand coolant pipe (and the steering column on left-hand drive cars).
5. Fit the coolant tap.
6. Attach the servo end of the outer cable with the distance piece behind the clip.
7. Slide the crank lever onto the servo output shaft but do not tighten. Set the crank lever with the pinch bolt in the vertical position.
8. Fit inner cable through trunnion and pull tight to remove any slack in cable. Push the inner cable back into outer cable by 6.99 mm. (0.275 in.) and secure.

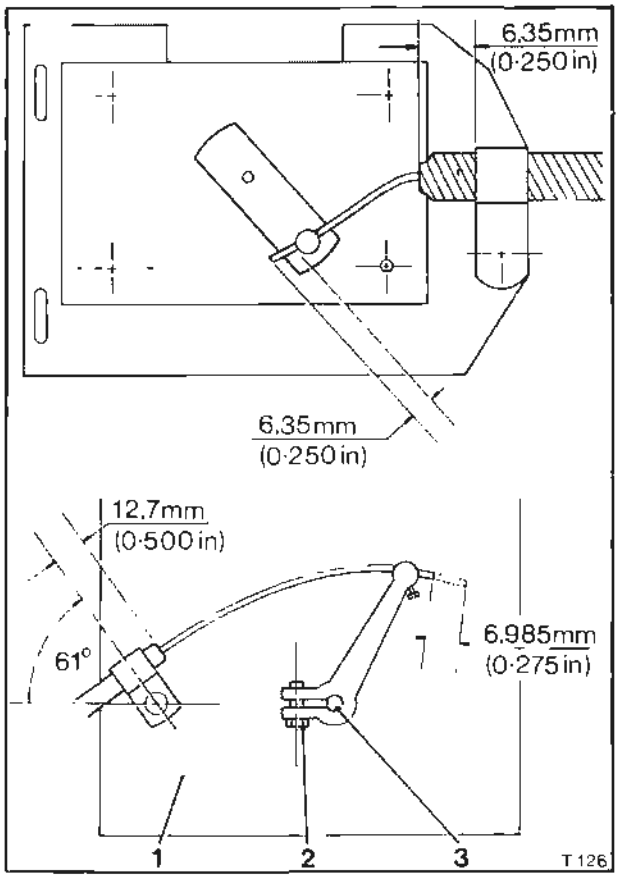

Fig. C25 Setting the water tap actuating cable
1 Lower servo
2 Pinch bolt
3 Servo output shaft

9. Move the crank lever by hand over the full travel range to ensure freedom of movement, adjust the angle of the outer cable retaining clips to obtain this movement.
10. Pull the crank lever fully back and tighten the pinch bolt.

Heater and control box - To remove

The heater and control box is removed from inside the car, the assembly basically comprises the heater matrix, heater box, flaps and control rods to operate these flaps.

1. Drain the engine coolant (see Chapter L).
2. Remove the facia panel (see Chapter S).
3. Remove the top roll (see Chapter S).
4. Remove the demister panel (see Chapter S).
5. Remove the knee roll panels (see Chapter S).
6. Remove the instrument panel (see Chapter S).
7. Remove the servo assembly.
8. Remove the demister outlet ducts.
9. Disconnect the mode flap linkage.
10. Unclip the rubber clip securing the electrical wiring looms to the heater and control box assembly.

Printed in England

© Rolls-Royce Motors Limited 1978

March 1978

T.S.D. 4200

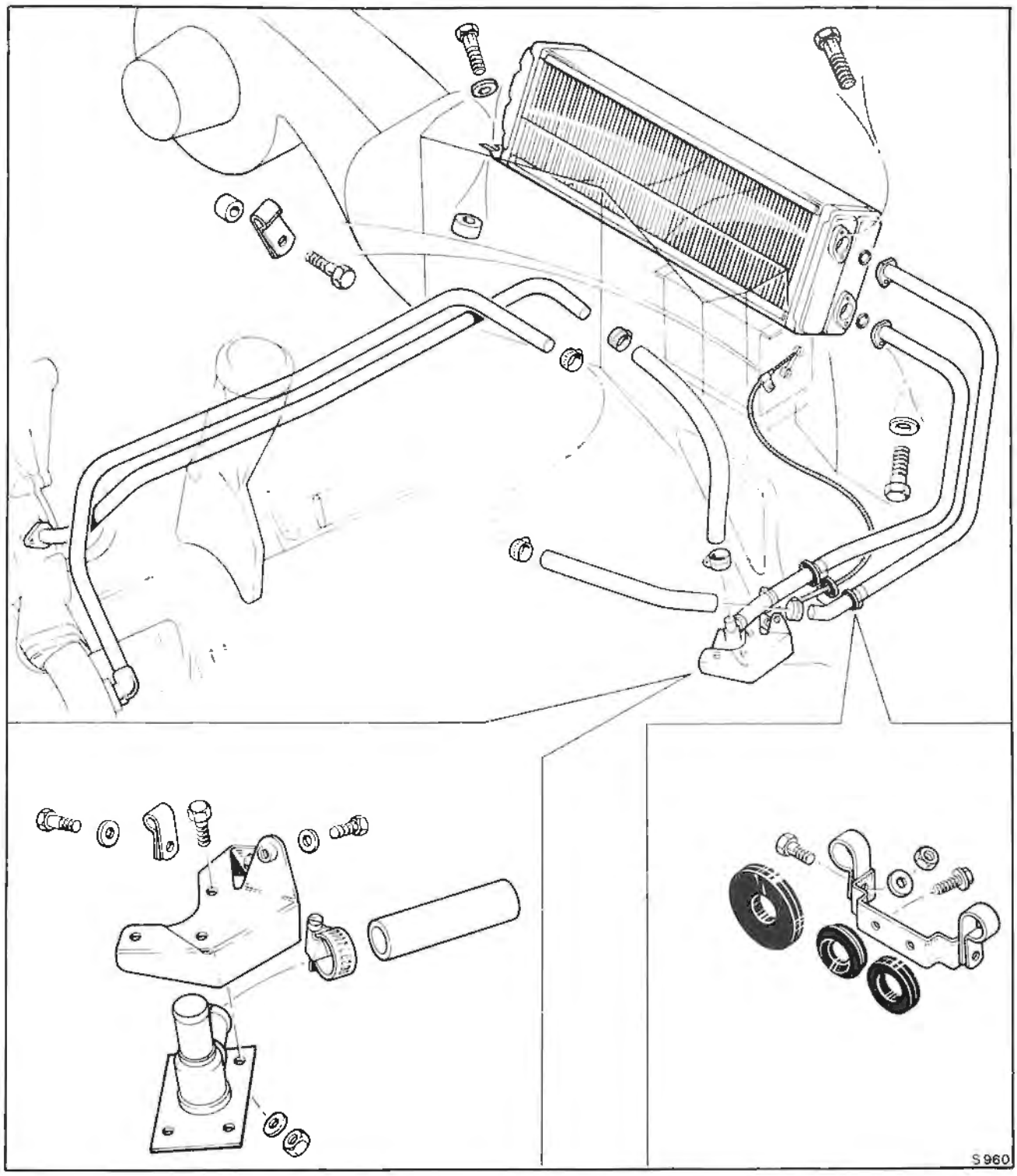

Fig. C26 Heater, water tap and pipes

11. Disconnect the coolant inlet and outlet pipes from the matrix.
12. Unscrew the small nuts and washers securing the heater and control box to the bulkhead, these nuts and washers are situated down either side of the assembly. Carefully withdraw the heater and control box assembly from the bulkhead aperature.

Heater and control box - To assemble

1. Apply sealer to all edges and spot weld flanges surrounding the drain channel and in the heater box

Fill the channel with water until the level reaches the flap apertures and check for leaks.

2. Ensure that the seals fitted into the seal retainers (through which the link rods pass) are in

a good condition.
3. Fit a seal retainer and seal at the rear of each of the three holes and fix each with two pop rivets
4. Slit the seal in each seal retainer with a sharp knife to allow a link rod to pass through.
5. Fit the two bearing bushes to the two upper system blanking plates with the pointed end of the bushes towards the same side as the small flange.
6. Fit the two bearing bushes to the two inner pivots of the upper temperature flap, pointed end of the bushes outwards.
7. Press a pivot bush into the lever and repeat for the other hand. Fit a pinch bolt to each lever.
8. Fit a grommet to the upper system link rod. Press the link pin through the grommet and place one washer on either side of the link pin. Press the lever into the position illustrated one on each end of the assembly.
9. Position the upper temperature flaps into the heater box, one from either end, long end of the spindle inwards locating in the inner bearing bushes
10. Slide the levers over the ends of the upper temperature flap spindles and fit the centre support bearing to the inner ends of the two spindles. The link rod for the upper temperature flaps should pass through the two seal retainers.
11. Fit the washer onto the short end of the spindle protruding from the flap.
12. Fit the upper system blanking plate together, with the appropriate seal, to each end of the heater box, in order to locate the upper temperature flap and to seal the end of the heater box. Secure the blanking plate with self tapping screws.
13. Fit the metering plates to each of the upper temperature flaps, use three self-tapping screws to secure each plate.
14. Set the upper temperature flaps by tensioning both flaps against the sealing face (hot air position). Tighten the locking screws of both levers using the setting piece to determine the relative position of the levers.
15. Fit the bearing bush to the lower system temperature flap pivot, pointed inwards, to the end opposite the blanking plate.
16. Fit the pivot bush into the bracket on the lower temperature flap.
17. Fit the lower temperature flap through the bearing bush.
18. Place the spindle of the lower temperature flap into its correct position and fit the remaining bearing bush.
19. Fit the blanking plate with its seal using the self tapping screws.
20. Position the link rod and snap into the pivot bush.
21. Ensure that the bottom seal and two side seals, situated at the base and either side of the heater matrix, are in a good condition and securely bonded to the matrix.
22. Insert the heater matrix into position through the aperture in the heater and control box.
23. Secure the heater matrix with the setscrews, washer and spacers.
24. Ensure that the flange seal around the heater matrix cover and the foam seal in the well of the cover, are both in a good condition and securely bonded into position.
25. Fit the matrix cover and secure in position with self-tapping screws.

Expansion valve - To remove (see Fig. C27)
1. Disconnect the battery.
2. Discharge the refrigeration system.
3. On the expansion valve unscrew the connection that secures the pipe from the receiver/drier.
4. Unscrew the equaliser line from the suction throttling valve.
5. Slacken the clamp which secures the expansion valve phial to the low pressure vapour line that runs from the evaporator matrix to the suction throttling valve. Withdraw the phial.
6. At the base of the expansion valve, unscrew the connection securing the pipe that runs to the evaporator matrix.
7. Remove the expansion valve.

Suction throttling valve - To remove (see Fig. C27)
1. Discharge the refrigerant.
2. Disconnect the low pressure vapour line to the compressor by unscrewing and disconnecting the pipe union situated at the front of the suction throttling valve.
3. Disconnect the low pressure vapour line from the evaporator matrix by unscrewing and disconnecting the pipe union situated at the rear end of the suction throttling valve.
4. Unscrew and disconnect the equalising pipe from the expansion valve.
5. Withdraw the suction throttling valve.

Suction throttling valve - To fit
Fit the suction throttling valve by reversing the procedure given for removal, noting the following points.
1. Fit new rubber 'O' rings.
2. After fitting the suction throttling valve the full procedure of evacuation and sweeping must be carried out before the system is charged.
3. The suction throttling valve pressure is pre-set and cannot be adjusted.

Evaporator box - To remove (see Fig. C27)
1. Disconnect the battery.
2. Discharge the refrigeration system.
3. Remove the bonnet release mechanism (see Chapter S).
4. Detach the straps securing the ducting to the evaporator box.
5. Peel back the rubber sleeve connecting the ducting to each fan motor assembly.

Printed in England
© Rolls-Royce Motors Limited 1978
March 1978
T.S.D. 4200

6. Withdraw the ducting.
7. Detach the electrical leads from the refrigeration compressor ambient switch.
8. Unscrew and detach the two refrigeration pipes which pass into the evaporator box to the rear of 'B' bank cylinder head.
9. Remove the nuts and washers and the four self-tapping screws securing the evaporator box in position. The self tapping screws are situated on either side of the evaporator at the bottom and are partially hidden from view, they can however be unscrewed with a long screwdriver.
10. Withdraw the evaporator assembly from the bulkhead.

Evaporator box - To assemble

1. Ensure that the seals are in a good condition and securely bonded to the flange wing.

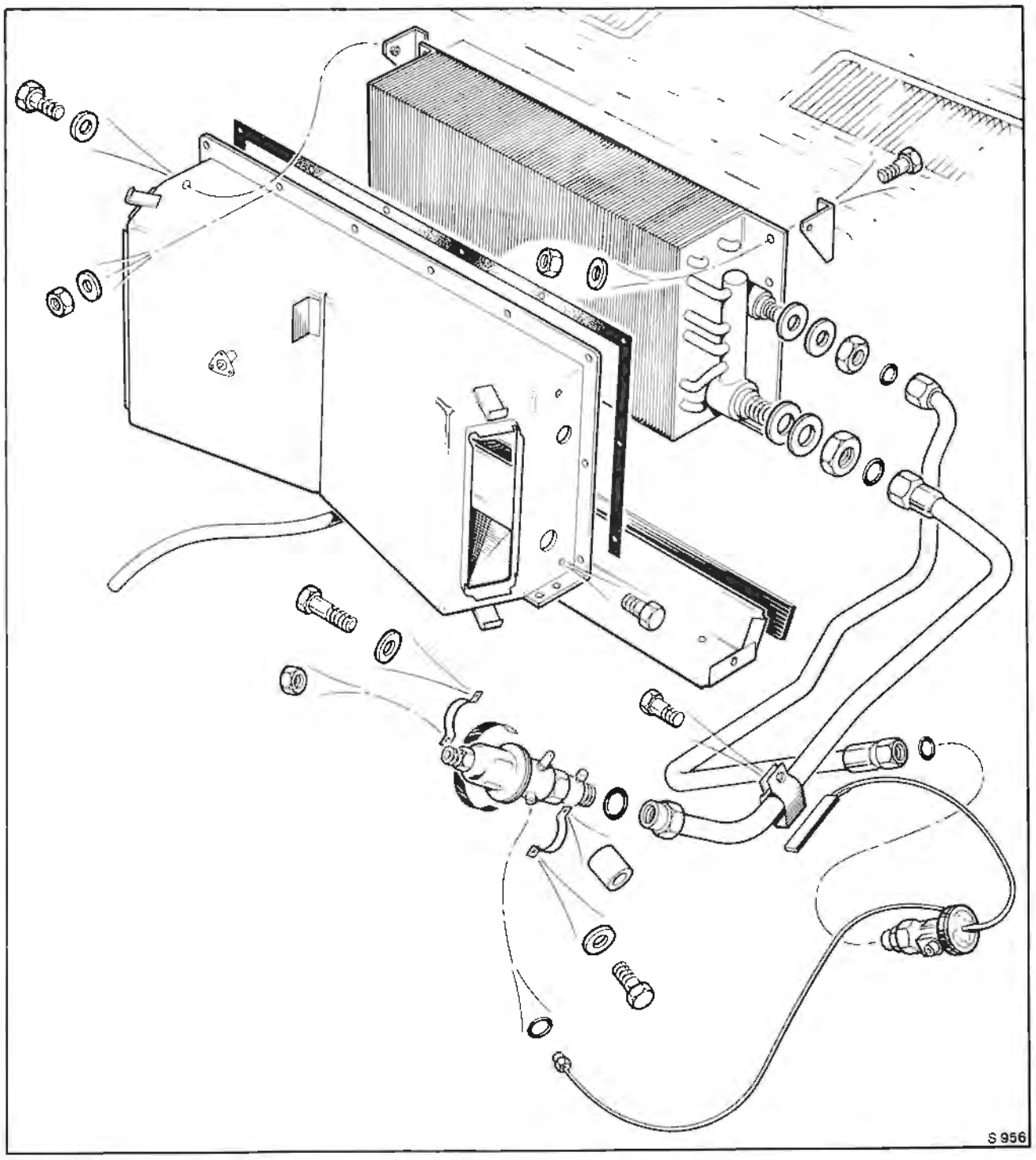

Fig. C27 Evaporator and pipes, suction throttling valve and expansion valve

2. Fit the evaporator matrix loosely into the evaporator box by first passing the union connections through the holes in the evaporator box end plate.
3. Fit both upper mounting brackets into position and fix each with three 2 B.A. setscrews and washers. Do not tighten the setscrews.
4. Slide the evaporator tray into position.
5. Fix the evaporator tray to the evaporator matrix using two 2 B.A. setscrews and washers.
6. Fix the evaporator tray to the evaporator box using two 2 B.A. setscrews and washers.
7. Fit the sealing washers, washers and nuts to the vapour and suction line connectors.
8. Tighten all 2 B.A. setscrews.
9. Seal the evaporator tray to the evaporator box using Bostik 717 or similar and water test.

Distribution box assembly - To remove

The distribution box assembly carries the mode flap and the adapter duct (which in turn carries the facia outlet ducts). It is situated directly behind the centre of the instrument panel and forms the rear section of the automatic air conditioning control box.

The distribution box assembly can be removed with the control box assembly either fitted to or removed from the car.

If the distribution box assembly is to be dismantled when removed from the vehicle it will be necessary to carry out the following operations.

1. Remove the facia panel (see Chapter S).
2. Remove the top roll (see Chapter S).
3. Remove the demister panel (see Chapter S).
4. Remove the knee roll panels (see Chapter S).
5. Remove the instrument panel (see Chapter S).
6. Disconnect the convoluted ducting to the circular facia outlets.
7. Remove the demister outlet ducts.
8. Unscrew and remove the Pozidrive screws surrounding the distribution box assembly.
9. Withdraw the assembly.

Distribution box assembly - To assemble (see Fig. C28)

1. Ensure that the heater and control box to distribution box seal is in good condition and securely bonded to the distribution box.
2. Assemble the mode flap into the distribution box by passing the long end of the mode flap through the

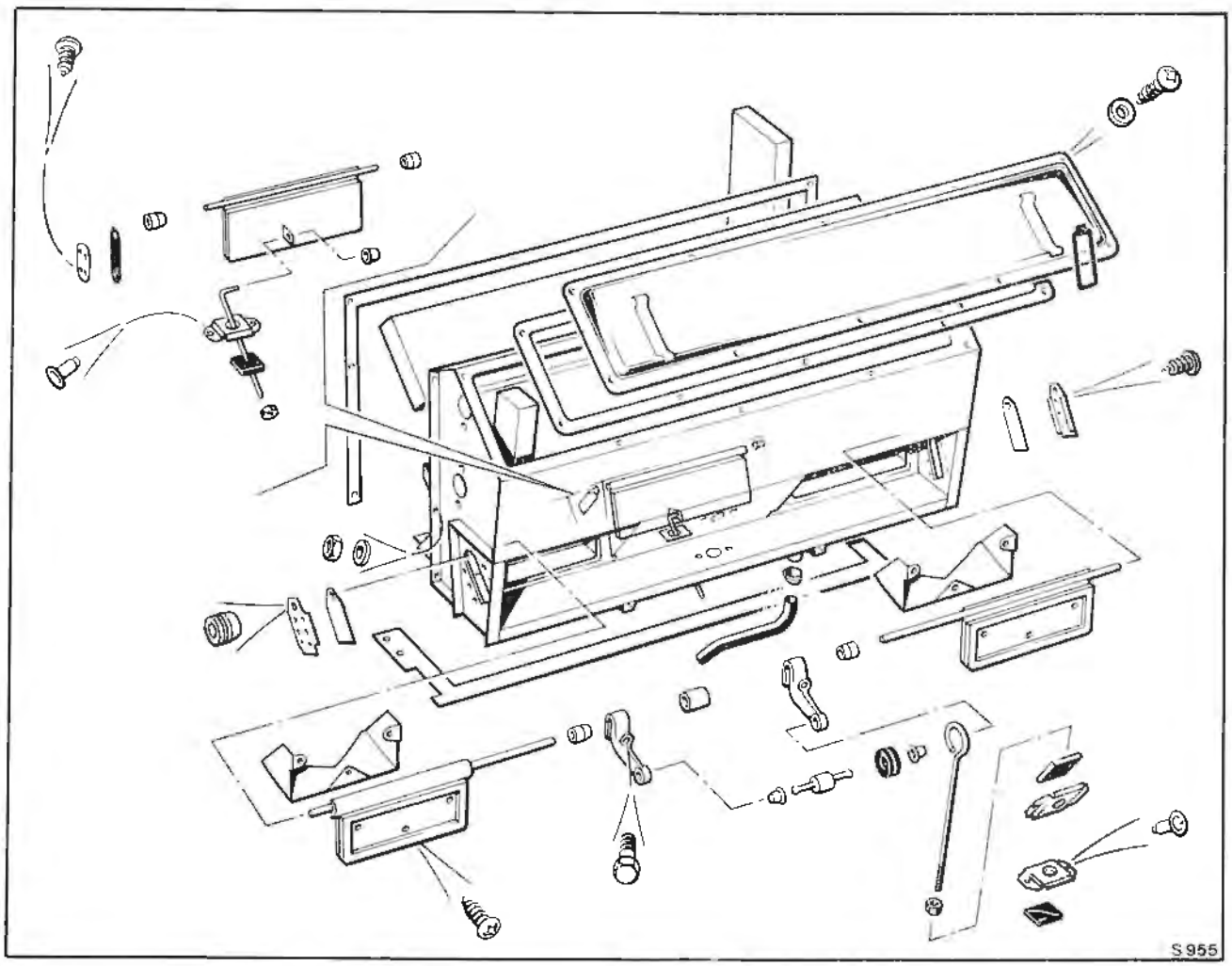

Fig. C28 Distribution box

Printed in England

© Rolls-Royce Motors Limited 1978

March 1978

T.S.D. 4200

bearing hole in the end plate of the distribution box and sliding the other end into the bearing hole in the opposite end of the distribution box.

Note
The long end of the mode flap spindle should be positioned towards the right on right-hand drive cars and towards the left on left-hand drive cars.

3. Place a spacer over each end of the mode flap spindle and then press a bearing bush into position from either end of the spindle.

4. Locate the crank lever with the pinch bolt fitted onto the mode flap spindle. Position the crank lever in line with the mode flap and tighten the pinch bolt.

5. Position the adapter duct onto the distribution box and secure with two long thin self-tapping screws (positioned one either side of the centre duct) fitted with spring anchorages under their heads, four shorter thin self-tapping screws and five, short thick self-tapping screws.

6. Hold the rectangular outlet flap, insert the foam washer under head of the pivot bush and fix the bush into the outlet flap bracket.

7. Hold the outlet flap link rod and screw on the lock-nut, screw the outlet flap link rod into the adjusting piece.

8. Snap the cross pin on the adjusting piece into the pivot bush on the rectangular outlet duct flap.

9. Hold the rectangular outlet housing and fit the flap assembly into position, inserting a lever and pivot assembly from each end and securing the flap assembly with one Allen screw at each end.

10. Ensure the flap housing to instrument panel seal is in good condition and is securely bonded into the seal holder.

11. Fasten the seal holder to the outlet duct flap housing using four self-tapping screws.

12. Apply a small amount of rubber lubricant to the tapered seal of the outlet flap housing. Press the housing into position on the adapter duct and fasten with six self-tapping screws. Fit the toggle spring between the spring anchorage and the toggle lever.

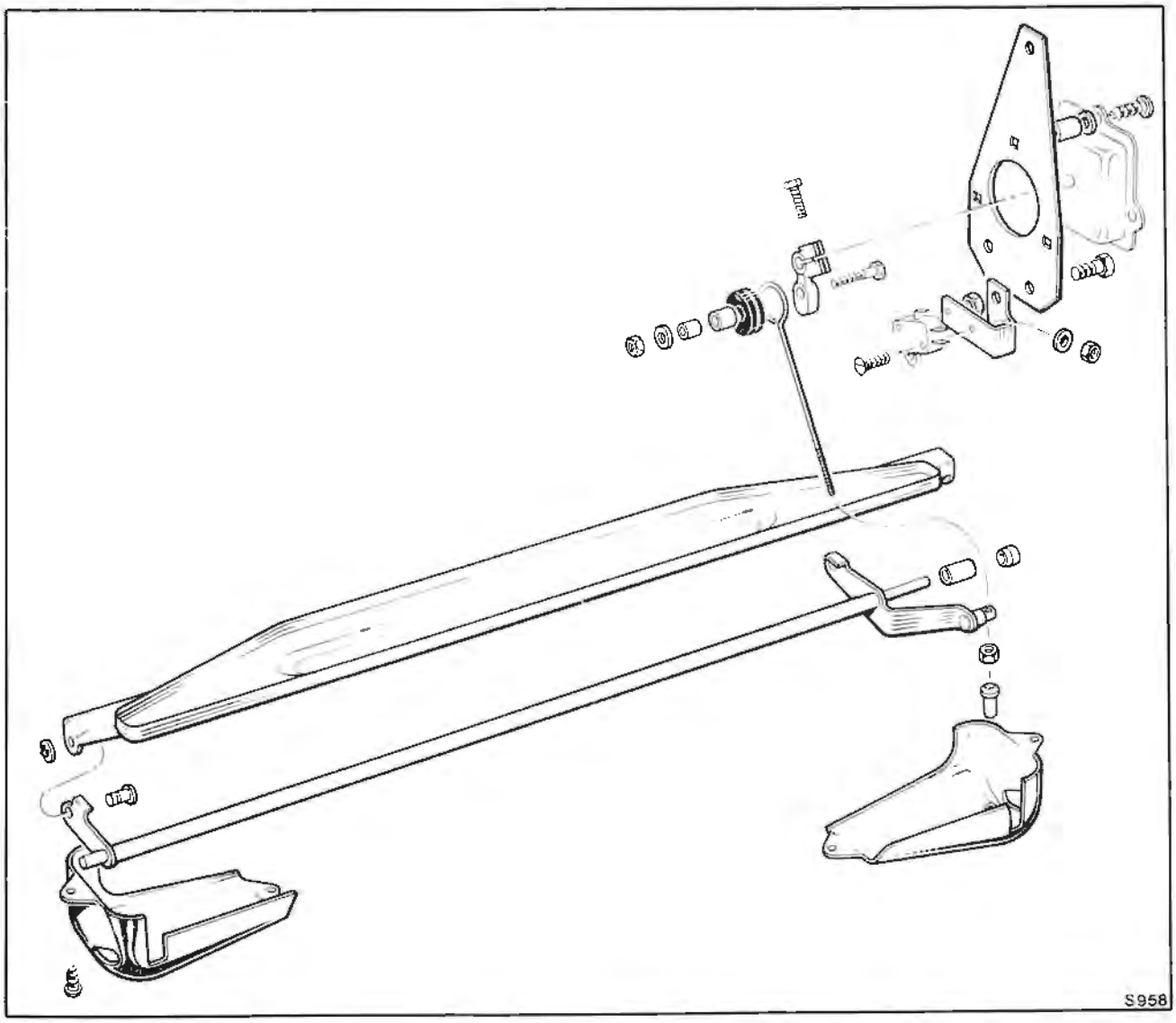

Fig. C29 Lower quantity flap and actuator

Lower quantity flap - To fit (see Fig. C29)
The lower quantity flap can be fitted with the heater and control box either fitted to, or removed from, the car.
1. Assemble the torque tube into the bearing mounting bracket on the body by placing the spindle at the right-hand end of the torque tube, through the hole in the bearing bracket and then, swinging the assembly upwards so that the left-hand spindle can be pushed through the hole in the opposite bracket. When both ends are located, fit the spacer tube to the right-hand spindle and the bearing bushes to both ends by pushing them onto the spindles, tapered ends inwards, until the groove in each bearing bush locates in its bracket.
2. Locate the lower quantity flap assembly into position through either of the front heater apertures with the narrow side forward and the seal to the top.
3. Fit the pins through the holes in the end of the flap extension arms and also through the holes in the torque arm, taking care to ensure that the inward turned tags on the torque arm fit over the buffer rubbers and do not push them to one side.
4. Fit the retaining clips onto the pins, ensuring that the legs of the clips fit into the grooves on the pins.
5. If the heater and control box are already fitted to the car and the lower quantity flap has been fitted through the front compartment lower outlets, fit the outlet ducts.

Lower quantity flap linkage - To fit and set
1. Fit a grommet to the round eye of the straight link rod.
2. Fit the spacer and distance piece into the grommet and bolt to the actuator crank lever.
3. Fit the pinch bolt to the crank.
4. Fit one lock-nut to the link rod.
5. Fit the crank assembly to the lower quantity flap actuator. Position the crank on the actuator spindle and tighten the crank lever pinch bolt.
6. Fit the actuator to the centre support bracket.
7. The lower quantity flap extension arm should be pressed downwards ensuring that the link rod passes through the hole in the bridge plate and then through the extension arm pivot block.
8. Screw down the lock-nut on the link rod until it maintains the flap in the closed position.
9. Screw the second lock-nut onto the end of the link rod and tighten against the pivot block.
10. A protective cap should be fitted to the threaded end of the link rod.

Lower quantity flap actuator - To remove
1. The lower quantity flap actuator is removed and fitted in a similar manner to the mode flap actuator.
Note
On left-hand drive cars the actuator is fitted on the left-hand facia support bracket therefore the left-hand trim panel must be removed.

Mode flap linkage - To fit and set
1. Fit the mode flap actuator.
2. Assemble a grommet to the round eye of the shaped link rod.
3. Fit the spacer and distance piece into the grommet. Bolt the assembly to the crank lever.
4. Fit a pinch bolt to the crank lever.
5. Fit the crank lever assembly to the spindle of the mode flap actuator.
6. Set the position of the crank lever and link rod.
7. Tighten the pinch bolt on the crank lever.
8. Screw a lock-nut onto the link rod.
9. Carefully thread the link rod through the pivot block attached to the mode flap assembly.
10. Press the mode flap assembly so that the mode flap sits firmly against its seat on the front of the distribution box.
11. Screw the lock-nut down the link rod until it contacts the pivot block.
12. Screw a second lock-nut onto the end of the link rod and tighten against the pivot block.
13. Fit a protective cap to the threaded end of the link rod.

Mode flap actuator - To remove
1. Disconnect the battery.
2. Remove the right-hand knee roll trim panel (see Chapter S).
3. Slacken the pinch bolt securing the flap link lever to the actuator spindle and detach the lever from the spindle.
4. Disconnect the Lucar socket from the actuator.
5. Unscrew the three screws securing the actuator and remove the actuator.

Recirculation flap - To assemble
1. Hold the torque tube assembly and place with the inwards turned flange of the side plates downwards. The flap assembly should then be placed between the side plates with the bracket on the flap upwards.
2. Fasten the flap to the torque tube assembly by pushing the pin through the hole in the end plate (i.e. from the inside to the outside). Hold the pin in place with the retainer.

Note
It is essential that the legs of the retainer engage in the pin groove correctly. To ensure this, a pair of pliers with a 4,0 mm. (0.156 in.) diameter hole in one leg, is required.
3. Place the hinge bracket assembly flat so that the weld nuts face upwards and the end tags are towards you. Fit the flap assembly with the linkage bracket downwards between the hinge brackets.
4. Press the bearing bushes into place from the outer ends by sliding them along the spindle of the torque tube.
5. Take the link rod and fit the grommet into the circular end. Fit the swivel tube into the grommet and insert the distance piece.
6. Fit the assembly to the linkage bracket and secure with the bolt, washer and nut.

Printed in England
© Rolls-Royce Motors Limited 1978
March 1978
T.S.D. 4200

Recirculation flap - To fit

1. To fit the recirculation flap assembly to the car, place the assembly into the aperture from inside the car body with the hinge at the top and the link rod towards the inside of the car. The left-hand and right-hand flap assemblies are distinguished by the position of the link rod (the left-hand flap has the rod offset to the left and the right-hand flap to the right).
2. With the flap placed against its upper seat, the hinge brackets can be placed in line with the holes in the body and the retaining screws fitted.
3. Place the grille in position by threading the link rod through the outer slot in the grille. Secure the grille in position with the four self-tapping screws.
4. To fit the actuator onto its mounting bracket commence by fitting the square bifurcated end of

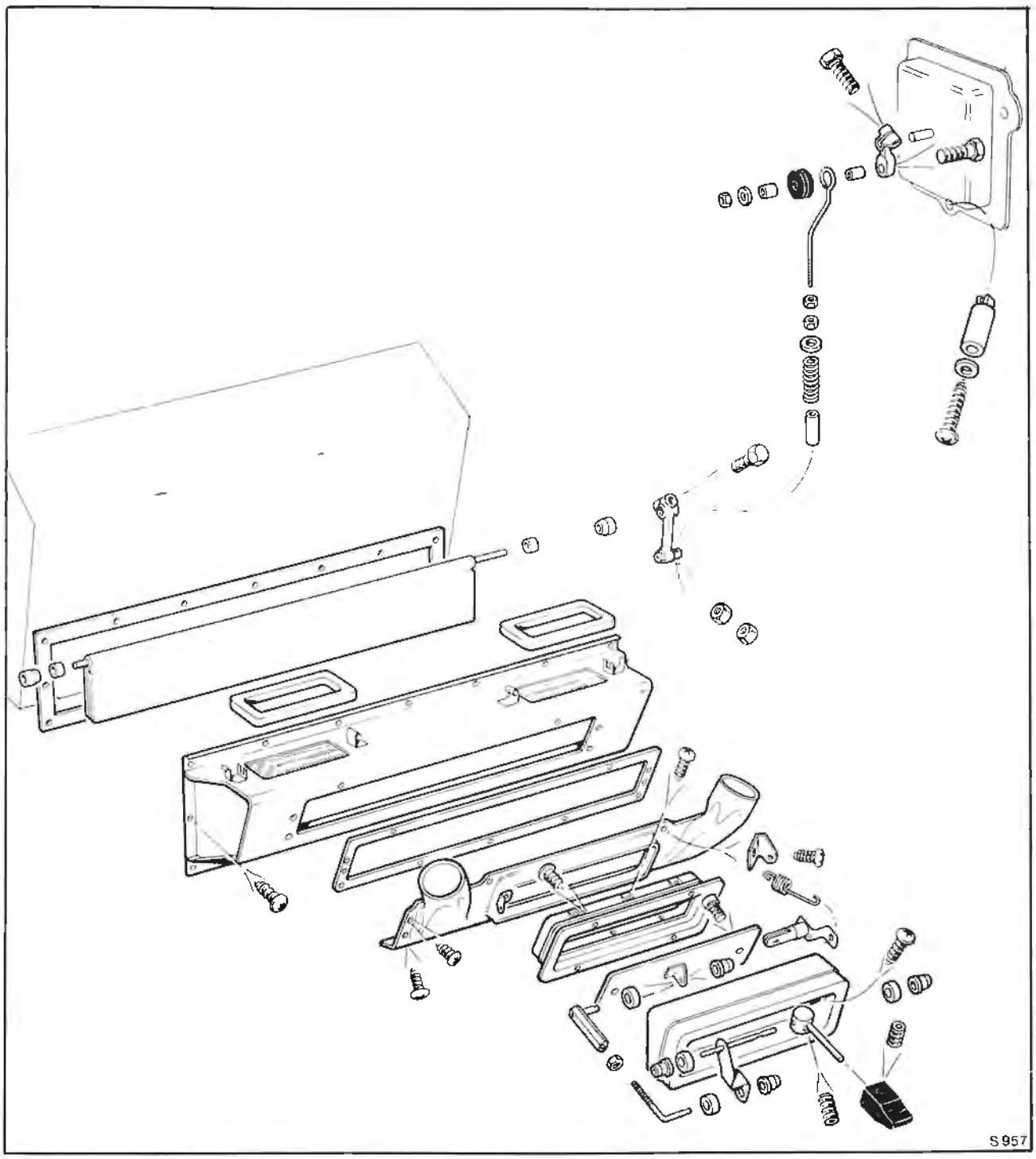

Fig. C30 Facia outlets, mode flap and actuator

the nuts through the square holes of the bracket from the raised side.

5. Position the piece of 12,7 mm. (0.5 in.) thick Hardura (the size of the flat portion of the bracket) over the nuts with the plastic side against the bracket.

6. The actuator should be mounted onto the nuts with the motor side of the actuator downwards (i.e. the spindle away from the bracket) and secured in position with the cheese head self-tapping screws and washers.

7. Mount this complete actuator assembly onto the car body, using the tapping blocks provided.

8. Fit the lever assembly to the actuator spindle. Screw two nuts 5 cm. (2 in.) along the thread of the link rod, followed by one plain washer, one spring

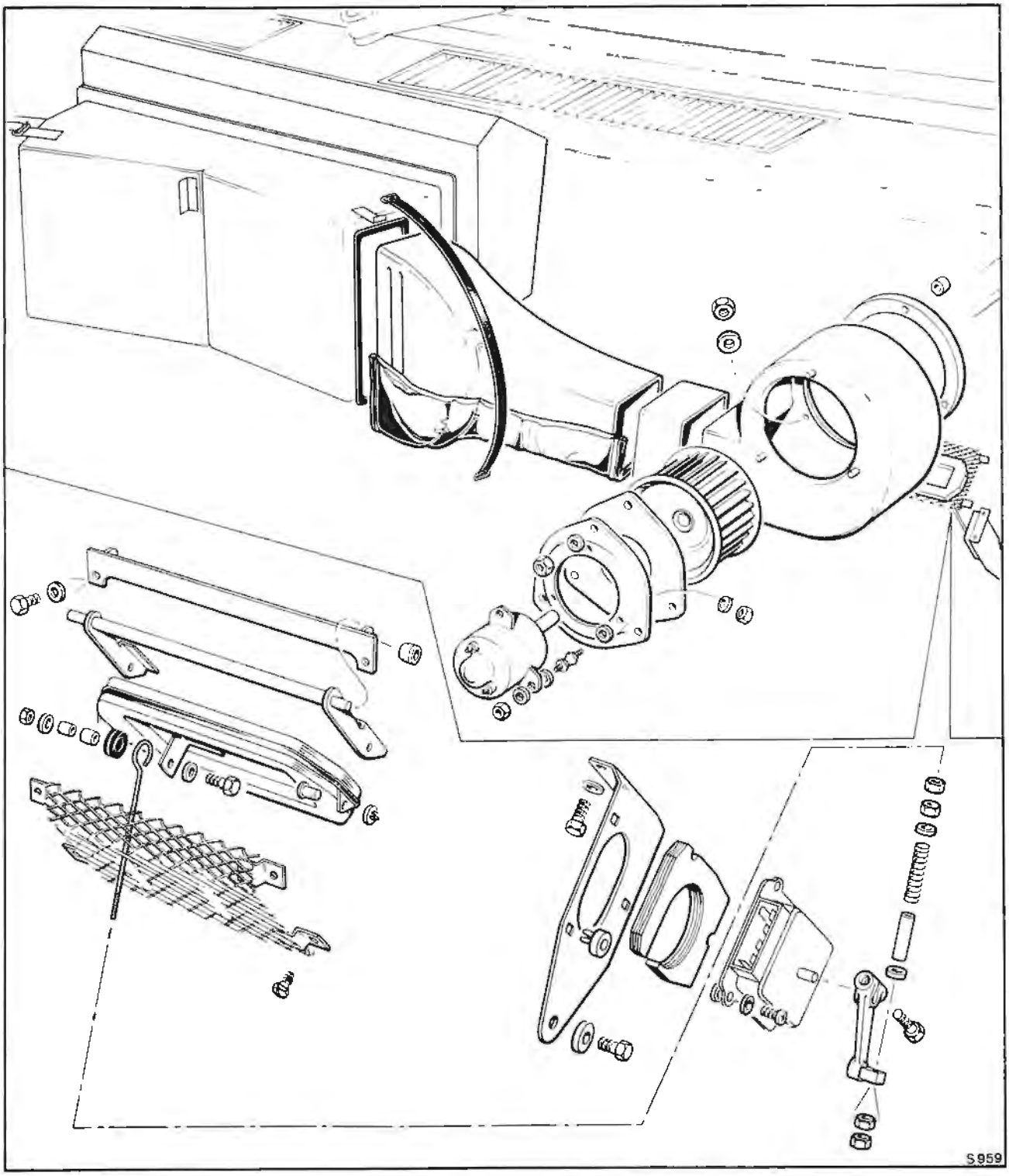

Fig. C31 Fans, recirculation flap and actuator

Printed in England
© Rolls-Royce Motors Limited 1978
March 1978
T.S.D. 4200

and a second plain washer. Place the rod through the hole in the swivel pin on the end of the lever and screw two nuts along the thread of the link rod to secure in position.

Recirculation flap - To set
1. Ensure that the pinch bolt retaining the lever to actuator shaft has been slackened.
2. Ensure that the actuator is set in the fresh air position.
3. Rotate the lever on the actuator shaft until the lever and the link rod are parallel to each other (i.e. the link rod is in line with the eye of the lever and the spindle).
4. Tighten the pinch bolt to secure the lever to the actuator spindle.
5. The two nuts on the end of the link rod should be tightened against the swivel pin until the flap is firmly seated on its lower seat, the two nuts on the end of the link rod should be locked together.
6. The two nuts threaded part way along the link rod should be set so that the spring is compressed to a length of 22 mm. to 25 mm. (0.875 in. to 1.0 in.), the nuts should be then locked together.

Recirculation flap - To check
1. Energise the actuator and set in the recirculation position and check that the flap seats on the upper seat.
2. When correctly seated, the spring should be compressed a further 3 mm. to 6 mm. (0.125 in. to 0.250 in.) as seen by the distance from the swivel pin to the lower lock-nuts.

Recirculation flap actuators - To remove
1. Disconnect the battery.
2. Remove the appropriate knee roll trim panel (see Chapter S).
3. Slacken the pinch-bolt securing the flap link lever to the actuator spindle and detach the lever from the spindle.
4. Disconnect the Lucar socket from the actuator.
5. Unscrew the screws securing the actuator to the mounting bracket and remove the actuator.

Servo assembly - To remove
1. Ensure that both flap levers are at bottom of travel
2. Disconnect the battery.
3. Remove the servo trim (see Chapter S).
4. Unscrew and remove the setscrew and distance piece securing the water tap outer cable.
5. Slacken the pinch bolt securing the water tap operating lever to the spindle and remove the lever from the spindle.
6. Unscrew and remove the lower nut on each flap operating rod and detach rod from its trunnion.
Do not move the upper nut.
7. Disconnect the two Lucar sockets and two in-line Lucar connectors from the servo unit.
8. Support the servo assembly and unscrew the four screws securing the assembly to the heater box.
9. Carefully withdraw the servo assembly from beneath the heater box ensuring that the two temperature flap operating rods pass between the two servos.

Servo module - To remove
1. The servo module can be disconnected from the edge connector without removing the servo assembly by unclipping the module from the support springs and gently easing the module from the edge connector.
Note
The two servo modules are interchangeable.

Voltage stabiliser and fan speed module - To remove
1. Disconnect the battery.
2. Remove the left-hand knee roll trim panel.
3. Detach the blue/black cable from terminal C1 of the fan switch-off relay.
4. Unscrew and remove the four screws and nuts securing the assembly.

Automatic air conditiong system diode board - To remove.
1. Disconnect the battery.
2. Remove the left-hand knee roll trim panel.
3. Remove the voltage stabiliser and fan speed module.
4. Remove the four Pozidrive screws securing the board.
5. Disconnect the three Lucar plugs and sockets and remove the board.

Lower quantity, fan switch-off and recirculation relays - To remove
1. Disconnect the battery.
2. Remove the left-hand knee roll trim panel.
3. Detach the cables from the relay terminals noting the colour of the cable and terminal identification.
4. Unscrew the two screws securing the relay body and remove the relay.

Fan delay, servo isolation and fan and compressor relays - To remove
1. Disconnect the battery.
2. Detach the cables from the relay terminals noting the colour of the cables and terminal identification.
3. Unscrew the two screws securing the relay body and remove the relay.

Rear window demister relay - To remove
The rear window demister relay is located in the luggage compartment and is removed in a similar manner to the other relays.

Compressor ambient thermostat - To remove
1. Disconnect the battery.
2. Detach the two Lucar connectors.
3. Remove the three securing screws and remove the thermostat.

Fan delay thermostat - To remove
1. Disconnect the battery.
2. Drain the coolant from the radiator into a clean container (Refer to Chapter L).
3. Detach the two Lucar connectors.
4. Unscrew the three screws securing the thermostat to the engine and remove the thermostat.

Fan motors - To remove
1. Disconnect the battery.
2. Peel back the ducting sealing strip.
3. Disconnect the two Lucar connectors.
4. Unscrew the three screws securing the fan and remove the fan.

Upper air saloon sensor (cantrail) - To remove
1. Disconnect the battery.
2. Remove the cantrail trim panel (Refer to Chapter S).
3. Detach the two Lucar connectors.
4. Unscrew the screws securing the sensor and remove the sensor.

Upper air solar sensor (top roll) - To remove
1. Disconnect the battery.
2. Remove the top roll (Refer to Chapter S).
3. Detach the two Lucar connectors.
4. Unscrew the self-tapping screws securing the sensor and remove the sensor.

Lower air saloon sensor (knee roll) - To remove
1. Disconnect the battery.
2. Remove the knee roll (Refer to Chapter S).
3. Detach the two Lucar connectors.
4. Unscrew the screws securing the sensor and remove the sensor.

Upper and lower ambient temperature sensors - To remove
1. Disconnect the battery.
2. Remove the trim from the right-hand side of the luggage compartment.
3. Detach the three Lucar connectors.
4. Remove the two setscrews securing the sensor and carefully withdraw the three leads through the rubber grommet.

Refrigeration compressor components

Refrigeration compressor - To remove
1. Discharge the refrigerant.
2. Disconnect the battery.
3. Disconnect the two 'Lucar' terminals from the compressor clutch.
4. Unscrew and remove the setscrews that secures the clamp plate to the rear face of the compressor.
5. Withdraw the clamp plate and refrigeration pipes from the rear face of the compressor.
6. Slacken the compressor drive belts.
7. Remove the belts.
8. Unscrew and remove the three nuts securing the compressor rear mounting to the inlet manifold.
9. Unscrew and remove the nut from each of the two front mounting points. Withdraw the bolts from the mountings, collect a washer from between the compressor and mounting bracket on one side and a distance piece from the mounting on the other side.
10. Lift the compressor from the engine and lay it, sump downwards, on a bench.

Refrigeration compressor - To fit
To fit the compressor, reverse the procedure given for its removal noting the following points.
1. Fit new rubber 'O' rings between the rear face of the compressor and the unions of the refrigeration pipes.
2. After fitting the compressor the full procedure of evacuation and sweeping must be carried out before the system is charged.

Hub and drive assembly - To remove
1. Using the special clutch hub and holding tool RH 7798 (J-9403): remove and discard the compressor shaft lock-nut.
2. Withdraw the hub and drive-plate assembly using the special puller RH 7800 (J-9401): retain the key.

Note
The puller must be screwed into its seat to prevent the hub and drive-plate assembly threads being damaged.

3. Remove the circlip and hub spacer washer.
4. Examine the clutch friction face for signs of wear or overheating, and check further for the underlying cause of the damage, e.g. low coil voltage or binding of the compressor internal mechanism.

Hub and drive assembly - To fit
1. When the hub is ready for installation, clean its friction face with suitable solvent cleaner. Locate the key in the compressor shaft key-way allowing it to project approximately 4,76 mm. (0.187 in.) from the end of the key-way. Locate the hub assembly on the key-way and, using the special hub and drive-plate fitting tool RH 7799 (J-9480) and a suitable distance piece, draw the hub and drive assembly onto the shaft until there is approximately 2,38 mm. (0.094 in.) space between the frictional surfaces of the drive-plate and pulley.

Remove tool RH 7799 (J-9480) and distance piece.

Note
Do not hammer or force the assembly onto the shaft. Always use the correct tools when removing or replacing clutch parts or serious damage may result to the internal components of the compressor.

2. Fit the hub spacer washer and circlip with the convex side of the clip facing the washer.
3. Fit a new lock-nut and torque tighten to 2,07 kg.m. (15 lb.ft.). The air gap between the frictional faces should be between 0,558 mm. and 1,447 mm. (0.022 in. and 0.057 in.).

Note
The shoulder or circular projection on the lock-nut

Printed in England
© Rolls-Royce Motors Limited 1978
March 1978
T.S.D. 4200

must face toward the circlip.
4. To 'bed-in' the clutch parts, run the engine and cycle the clutch assembly by switching the refrigeration system off and on 20 times at approximately 1 second intervals.

Pulley and bearing assembly - To remove
1. Remove the hub and drive assembly.
2. Remove the circlip retaining the pulley bearing and centre shaft key.
3. Fit the special puller pilot RH 7792 (J-9395) over

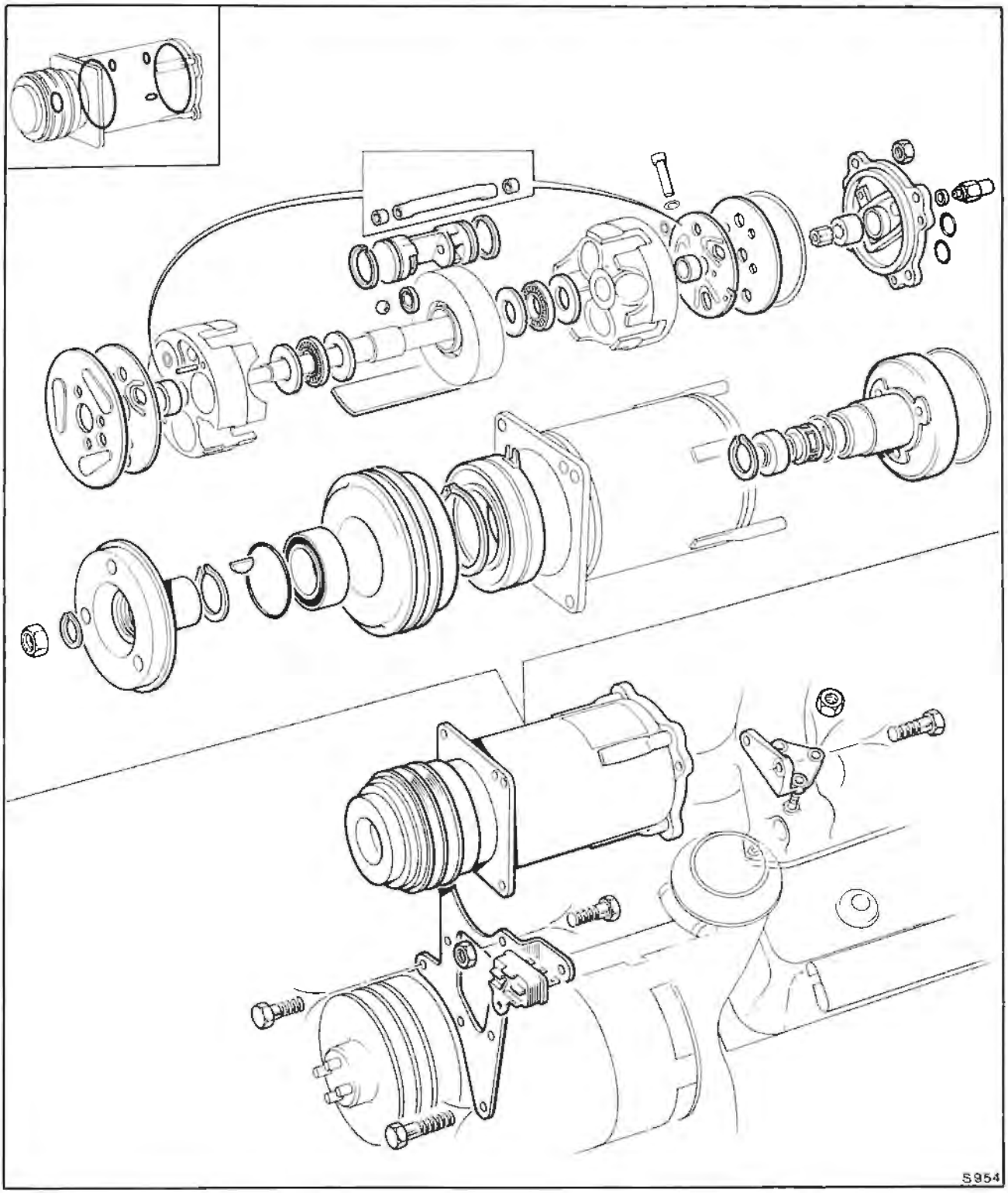

Fig. C32 Compressor and drive

the compressor shaft and using special puller RH 7791 (J-8433) withdraw the pulley assembly.
4. Check for excessive grooving in the clutch hub and drive-plate: fit new parts if necessary.

Bearing - To remove
1. With the pulley and bearing assembly removed from the compressor, use a sharp pointed instrument to remove the wire retainer ring.
2. Press the bearing out of the pulley housing using special bearing remover RH 7795 (J-9398) with handle RH 7794 (J-8092).

Bearing - To fit
1. Using the special tool RH 7796 (J-9481) and handle RH 7794 (J-8092), press the new bearing into the pulley.
2. Fit the bearing retainer ring.

Pulley and bearing assembly - To fit
1. Using special tools RH 7796 (J-9481) and RH 7794 (J-8092), press the pulley and bearing assembly onto the compressor shaft. Ensure that the pulley will rotate freely.
2. Fit the pulley retainer ring, the hub and drive-plate assembly and the retainer ring.

Coil housing - To remove
1. Following the removal of the hub and drive-plate assembly and the pulley bearing assembly, disconnect the two 'Lucar' terminals.
2. Scribe a mark on the coil housing and a corresponding mark on the compressor body.
3. Remove the circlip securing the coil to the compressor body.

Coil housing - To inspect
1. Examine the coil for loose terminals or cracked insulation.

Coil housing - To fit
1. Fit the coil housing in its correct position as indicated by the scribed marks.
2. Fit the circlip (flat face to coil housing).
3. Fit the hub and drive-plate assembly and the pulley bearing assembly.
4. Connect the 'Lucar' terminals and check the clutch for correct operation.

Compressor shaft seal assembly - To remove
1. Thoroughly clean the front head bore and fit a new 'O' ring in the bottom groove.
2. Immerse the shaft seal in clean compressor oil before fitting to prevent the shoulder from damaging the 'O' ring.
3. Using special seal installer RH 7793 (J-9392) fit the shaft seal over the flats on the compressor shaft with the carbon seal facing upwards: turn the seal installer anti-clockwise to release the seal.
4. Insert the seal seat into the front head bore taking care not to dislodge the 'O' ring: use tool RH 7802 (J-9393).

Note
The contact surface of the seal must be protected against any damage, such as scratches and nicks. Finger marks may cause surface damage.

5. Insert the retainer ring (flat side down) until the retainer rests on the seal seat. Using seal seat installer RH 7802 (J-9393), press the retainer ring until the spring pressure of the shaft seal is overcome and the retainer ring snaps into the groove in the casting bore.

Printed in England
© Rolls-Royce Motors Limited 1978
March 1978
T.S.D. 4200

Section C6

A.C.U. test box

Description

The automatic air conditioning system test box (RH 8851) enables the air conditioning system to be tested whilst the components are fitted to the car. The function of the controls on the box are as follows:

1. AUTO/CAL switch.
When AUTO is selected and the ACU is in 'automatic' mode, the test box functions as a servo position indicator. When CAL is selected, the test box can be calibrated.
2. UPPER/LOWER switch.
Selects the appropriate circuit under test.
3. MAX control
With the AUTO/CAL switch set to CAL and the 0% 100% switch set to 100%, the meter can be adjusted to 100%.
4. CHECK VOLTS switch
Measures the following:
Position 1. Supply voltage to the servo modules (9.1 volts)
Position 2. Output voltage from lower servo position potentiometer.
Position 3. Output voltage from lower sensor chain,
Position 4. Output voltage from upper servo position potentiometer.
Position 5. Output voltage from upper sensor chain.
5. IND/VOLTS switch
Determincs whether the meter is to be used as a voltmeter or a servo position indicator.
6. 0% 100% switch.
Enables the test box to be calibrated to the servo under test.
7. ZERO control
With the AUTO CAL switch set to CAL and the 0% 100% switch set to 0%, the meter can be adjusted to 0%.
8. RUN/SET switch
In the RUN position, the switch enables a servo to be operated in the automatic mode or calibrated. In the SET position, the temperature selector dials can be calibrated to a specific servo position.

Using the test box as a voltmeter

1. Set AUTO/CAL switch to AUTO and the RUN/SET switch to RUN.
2. Set IND/VOLTS switch to VOLTS.
3. Select the appropriate switch position as follows:
Position 1. Supply voltage to the servo modules (9.1 volts)
Position 2. Output voltage from lower servo position potentiometer.

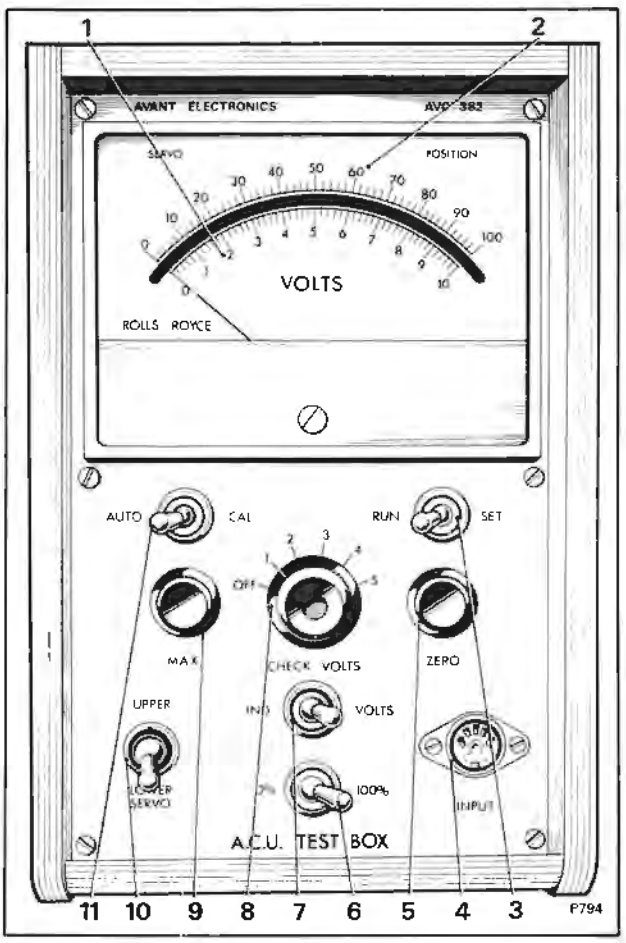

Fig. C33 Test box details

1	Volts scale
2	Servo position scale
3	RUN/SET switch
4	Input plug
5	ZERO control
6	0%/100% switch
7	IND/VOLT switch
8	CHECK VOLTS control
9	MAX control
10	UPPER/LOWER servo switch
11	AUTO/CAL switch

Position 3. Output voltage from lower sensor chain.
Position 4. Output voltage from upper servo position potentiometer.
Position 5. Output voltage from upper sensor chain.

Printed in England
© Rolls-Royce Motors Limited 1978
March 1978
T.S.D. 4200

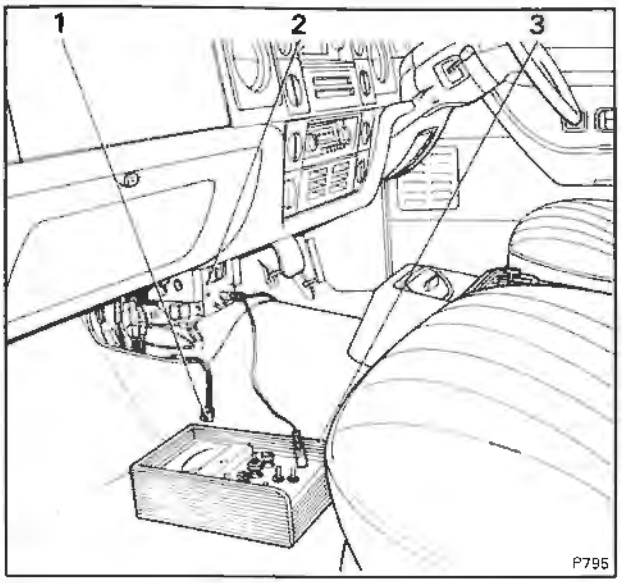

Fig. C34 Test box in position
1 Servo trim cover 5 way socket
2 Servo assembly
3 Test box RH 8851

Calibrating the test box as a servo position indicator.

1. Connect the test box to the test socket.
2. Select the required servo on the UPPER/LOWER SERVO switch.
3. Set IND, CAL and RUN on the appropriate switches.
4. Disconnect the socket situated under the servo trim cover, start the car engine and select LOW on the ACU function switch.
5. Set the 0% 100% switch to 0% and wait for the servo to stop.
6. Adjust the ZERO control to set the meter to 0%.
7. Set the 0% 100% switch to 100% and wait for the servo to stop.
8. Adjust the MAX control to set the meter to 100%.
9. Repeat operations 5 to 8 until both readings are correct.

Important
A servo may appear to have travelled to the limit switch (operations 5 and 7) and the test box adjusted accordingly but, in fact, the servo has stalled. If a stall condition is suspected the supply voltage to the servo motor should be measured at the servo socket where a voltmeter probe can be inserted. The upper servo supply is at the pink/blue cable and the lower servo supply is at the pink/light green cable. If a stall condition exists the voltage between the servo supply and earth will be less than 8 volts, otherwise the voltage should be greater than 12 volts.

Servo position indicator with ACU operating automatically

1. Select the required servo on the UPPER/LOWER SERVO switch and calibrate the test box.
2. Set the AUTO/CAL switch to AUTO.
3. Set the RUN/SET switch to RUN.
4. Ensure that the servo trim cover socket is connected.

Servo position indicator with manual control of ACU.

To observe the operation of the actuators and water tap, set up the test box as follows:
1. Select the required servo on the UPPER/LOWER SERVO switch and calibrate the test box.
2. Set the AUTO/CAL switch to CAL.
3. Set the RUN/SET switch to SET.
4. The servo may now be set to any required position using the temperature selectors on the facia but to achieve the extremes of servo position the servo trim potentiometers will have to be used.

Calibrating the temperature selectors

Correct servo position is related to selector position, in-car temperature and outside air temperature, therefore, to calibrate the temperature selectors, the servo positions are adjusted with the temperature sensors substituted by known fixed resistances. To obtain the correct temperature settings, the upper servo must be set to 51% and the lower servo set to 48% with the temperature selectors set to mid-range. The temperature selector calibration procedure is as follows:
1. Select the appropriate servo and calibrate the test box.
2. Set the AUTO/CAL switch to CAL.
3. Set the RUN/SET switch to SET
4. Disconnect the servo trim cover socket.
5. Set both temperature selectors to their **mid-position.**
6. Adjust the servo trim potentiometer until the meter reads 51% for the upper servo and 48% for the lower servo. **Approach the setting from 0%.**

Section C7

System test and fault diagnosis Contents

	Page
Introduction	C7 - 3
Connector and cable colour codes	C7 - 3
Theoretical wiring diagram	C7 - 5
Initial test	C7 - 7
Sensor chains	
Wiring diagram	C7 - 11
Temperature v resistance graphs	C7 - 13
Upper system fault-finding charts	C7 - 15
Lower system fault-finding charts	C7 - 19
Servo fault-finding charts	C7 - 23
Fan fault-finding charts	
Fans inoperative in all situations	C7 - 31
Fans inoperative in LOW, AUTO and HIGH	C7 - 33
Fan speed does not vary	C7 - 35
Flaps and actuators fault-finding charts	
Mode flap and actuator	C7 - 37
Lower quantity flap and actuator	C7 - 39
Recirculation flaps and actuator	C7 - 41
ACU switch wiring diagram and testing	C7 - 45
Refrigeration system	
Compressor thermal fuse fault diagnosis	C7 - 47
Voltage stabiliser fault diagnosis	C7 - 49
Upper servo test and calibration procedure	C7 - 53
Lower servo test and calibration procedure	C7 - 57
Test procedure for recirculation, lower quantity, mode change, fan inhibit and rear window demist circuits	C7 - 61

Printed in England
© Rolls-Royce Motors Limited 1978

December 1978
T.S.D. 4200

Section C7

System test and fault diagnosis

Introduction

This section describes the complete system test procedure and includes fault-finding charts that can be used to quickly diagnose a fault when time is not available to complete the test procedure. However, when time is available, the test procedure should be carried out.

To use the fault-finding charts, first complete the road test described in this section noting each malfunction. A guide, indicating the appropriate chart to use, is given at the completion of the road test.

Connector and cable colour codes

Connector code

The wiring diagrams are basically theoretical circuits showing all plug and socket connectors, which can be identified using the following code. The pin numbers referred to are viewed with the plug inserted and do not necessarily correspond with the numbers moulded on the plug and socket.

Code	Location
ACU	ACU switch sockets
B	Body socket
C	Console
D	Door socket
FA	Fuseboard 'A'
FB	Fuseboard 'B'
V	Valance
MD	Main distribution
TA	Toeboard socket 'A'
TM	Toeboard socket M
SCS	Sensor connector socket

Cable colour code

B	Black	LG	Light green
N	Brown	U	Blue
R	Red	S	Slate
O	Orange	P	Purple
Y	Yellow	W	White
G	Green	K	Pink

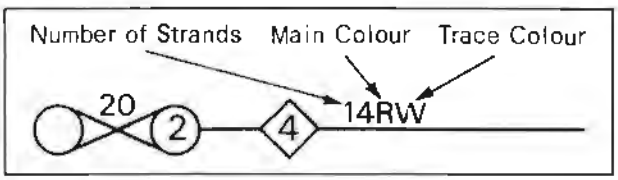

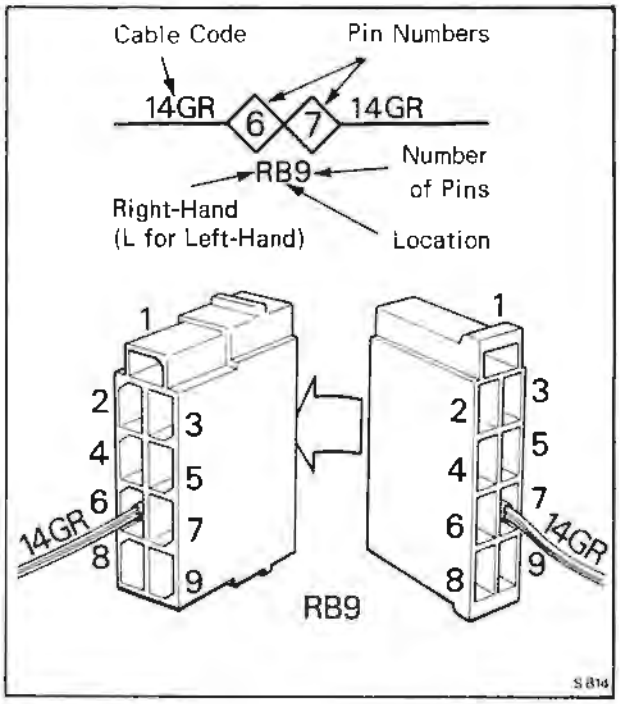

Printed in England
© Rolls-Royce Motors Limited 1978
September 1978
T.S.D. 4200

Section C7

System test and fault diagnosis

Theoretical wiring diagram
Automatic air conditioning unit
Fig. C35

© Rolls-Royce Motors Limited 1978

Printed in England

T 141

T.S.D. 4200 September 1978

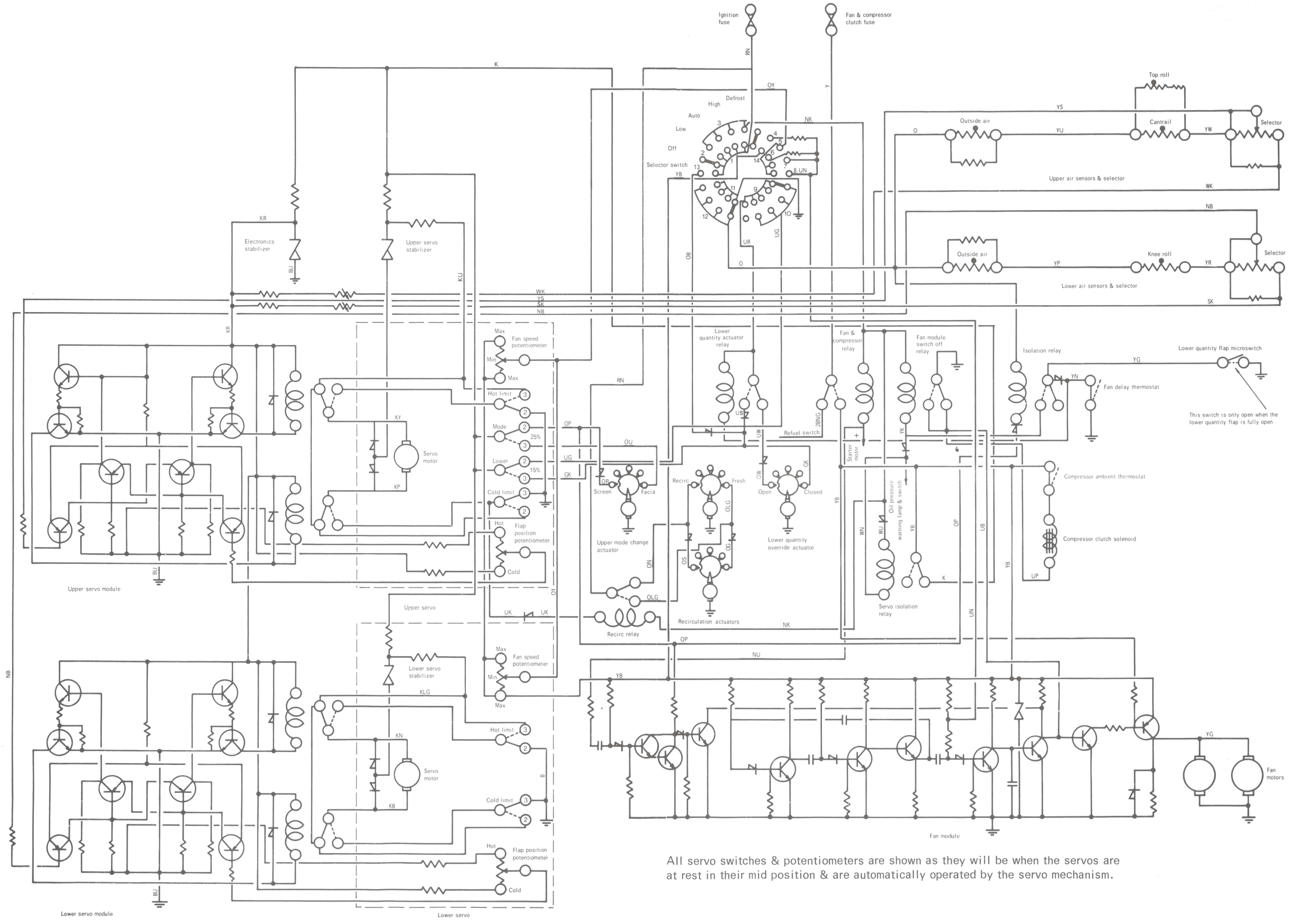

All servo switches & potentiometers are shown as they will be when the servos are at rest in their mid position & are automatically operated by the servo mechanism.

System test and fault diagnosis

Initial tests

Introduction

These initial tests describe the sequence of events that should occur when the ACU is switched on, one test applies to a car with a 'cold' engine, the other test applies to a car with a 'hot' engine i.e. when the coolant is above 44 °C.

The right-hand column indicates which fault diagnosis chart to use or which part of the system is probably faulty. However, the test should be completed fully before attempting any rectification to enable a complete picture of the malfunction to be given.

'Cold' engine

1. Turn ACU switch to AUTO and both temperature selectors to maximum temperature position. Start engine. **The fans should not operate**	Interlock or Inhibit circuits faulty.
2. **The lower quantity flap should be closed**	Lower quantity flap fault diagnosis.
3. **The recirculation flaps should be in the 'Fresh Air' position.**	Recirculation flap fault diagnosis ACU switch faulty.
4. As the engine coolant warms up, **the lower quantity flap should open**	Lower quantity flap fault diagnosis.
5. **The fans should start operating ONLY when the lower quantity flap is fully open**	Lower quantity flap fault diagnosis.
6. **Warm air will flow from the windscreen outlets**	No airflow - Fans inoperative fault diagnosis Airflow from facia - Mode flap fault diagnosis Incorrect air temperature - Water tap incorrect. Upper servo fault diagnosis. Sensor chain fault diagnosis.
7. **Warm air will also flow from the front and rear footwells.**	Lower quantity flap fault diagnosis
8. Turn the ACU switch to DEFROST **Verify that the lower quantity flap has closed.**	ACU switch fault Lower quantity flap fault diagnosis
9. **The fans should run at a fixed fast speed**	Fan speed module
10. **Air should only flow from the screen outlets**	Mode flap fault diagnosis . ACU switch faulty. Upper servo fault diagnosis

Printed in England
© Rolls-Royce Motors Limited 1979

11. Set the Mode Change switch to FACIA **The airflow should now flow from the facia outlets**	Mode change switch faulty. Mode change relay faulty
12. Set the Mode Change switch to AUTO **The airflow should now be from the windscreen outlets**	Mode change switch or mode change relay faulty
13. Set the Mode Change switch to FACIA **Airflow should be from facia outlets**	Mode change switch or mode change relay faulty
14. Switch off the ignition and immediately restart the engine **The fans should not operate for approximately 13 seconds**	Inhibit circuit faulty
15. Airflow should now only be from the windscreen outlets	Mode change switch or Mode change relay faulty
16. Let the 'In-car' temperature rise to an uncomfortable level to enable the mode, lower quantity and recirculation flaps to be tested.	
17. Set the ACU switch to AUTO and both temperature selectors to the minimum temperature position. **The airflow should only be from the facia outlets**	Mode flap fault diagnosis
18. The lower quantity flap should be closed	Lower quantity flap fault diagnosis
19. The recirculation flaps should be in the 'Recirculation' pesition Note. This can only be achieved with a combination of high 'in-car' temperature and an outside temperature above 5 C	Recirculation flap fault diagnosis
20. Slowly rotate the upper temperature selector away from the minimum temperature position **The recirculation flaps should move to the 'Fresh air' position**	Recirculation flaps fault diagnosis
21. The lower quantity flap should open	Lower quantity flap fault diagnosis
22. Stop rotating the temperature selector **Airflow should only be from the facia outlets and front and rear footwells**	Mode flap fault diagnosis
23. Switch off ignition & restart engine **The fans should start immediately**	Fans inoperative fault diagnosis

24. Continue rotating the upper temperature selector away from the minimum temperature position until the Mode flap operates **Airflow should be from the windscreen outlets and the front & rear footwells**	Mode flap fault diagnosis
25. Set both temperature selectors to the 'preferred' temperature position. Set the ACU switch to HIGH **The fan speed should increase**	Fan speed does not vary fault diagnosis
26. Set the ACU switch to LOW **The fan speed should decrease**	Fan speed does not vary fault diagnosis
27. Set the ACU switch to AUTO & drive the car on the road. Ensure that the system stabilises, giving a comfortable in-car temperature. Stabilisation is achieved when the fan speed decreases & becomes constant although this may not occur if the outside temperature is extremely high or low.	
28. When the road test is completed and with the engine still running, raise the car bonnet and inspect the condition of the refrigerant through the sight glass of the receiver/drier. **There should not be any bubbles or foaming**	Refrigeration system faulty

'Hot' engine

1. Disconnect the yellow/brown cable and the black cable from the 44 C fan delay thermostat and connect them together. Set the ACU switch to AUTO and both temperature selectors to the maximum temperature position. Start the engine **The fans should not operate**	Interlock or Inhibit circuits faulty
2. The lower quantity flap should be closed	Lower quantity flap fault diagnosis
3. The recirculation flaps should be in the 'Fresh air' position	Recirculation flap fault diagnosis
4. Switch off the engine & reconnect the yellow/brown and black cables to the fan delay thermostat. Start the engine. **The lower quantity flap should be open**	Lower quantity flap fault diagnosis
5. The fans should not operate for approximately 13 seconds	Inhibit circuit
For the remainder of this test, refer to paragraphs 6 to 28 of 'Initial test - cold engine'.	

Printed in England
© Rolls-Royce Motors Limited 1978

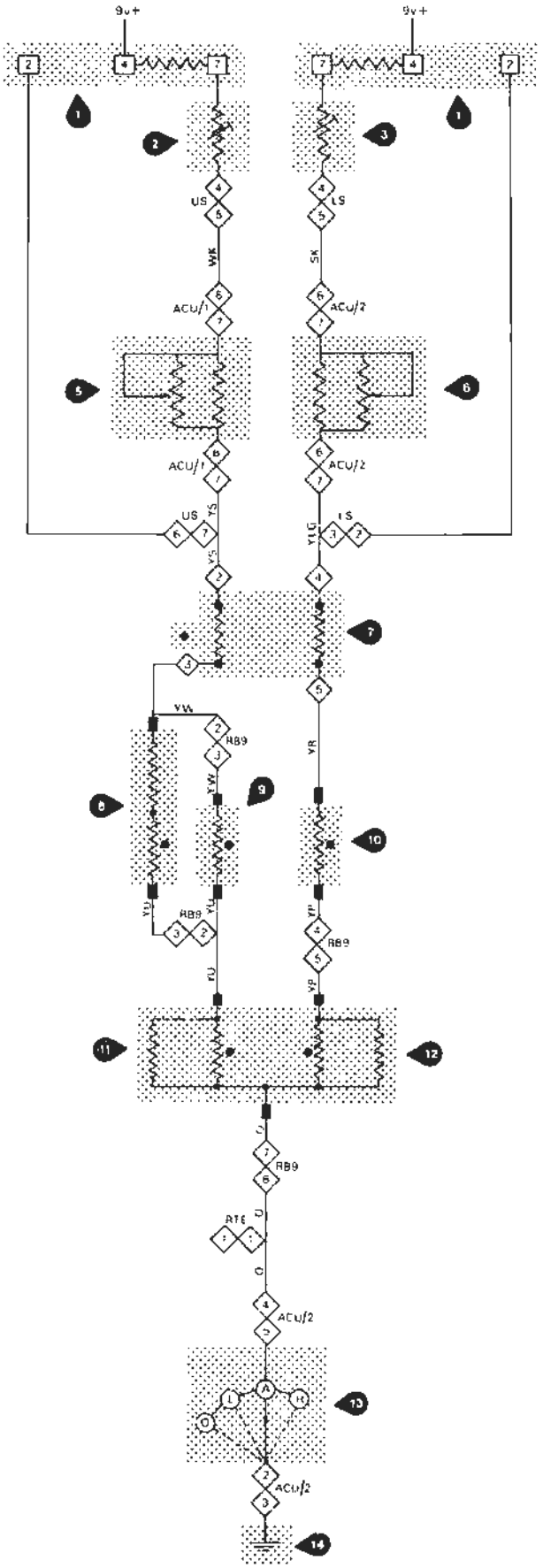

Section C7

System test and fault diagnosis

Upper and lower sensor chains

Fig. C36

Components

1 Upper servo module
2 Upper servo
3 Lower servo
4 Lower servo module
5 Upper temperature selector
6 Lower temperature selector
7 Sensor connection socket
8 Solar sensor
9 Cantrail sensor
10 Knee roll sensor
11 Outside air temperature sensor (upper system)
12 Outside air temperature sensor (lower system)
13 ACU switch
14 RH 'A' post earth

LS Lower servo
US Upper servo
RB9 Right-hand body socket 9 way
RTE Right-hand toeboard socket E

Printed in England
© Rolls-Royce Motors Limited 1978

Section C7

System test and fault diagnosis

Sensor chain resistance/temperature graphs

Fig. C37

Printed in England

© Rolls-Royce Motors Limited 1978

September 1978

S.D. 4200

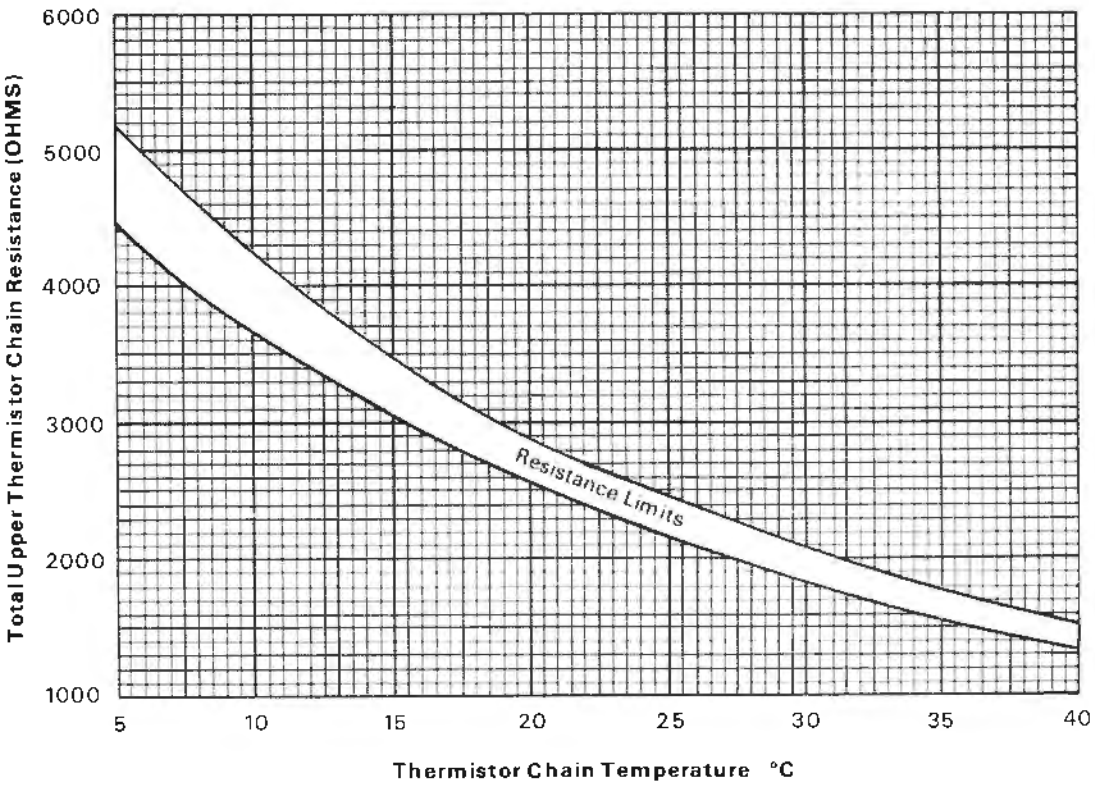

Graph 1

S 965

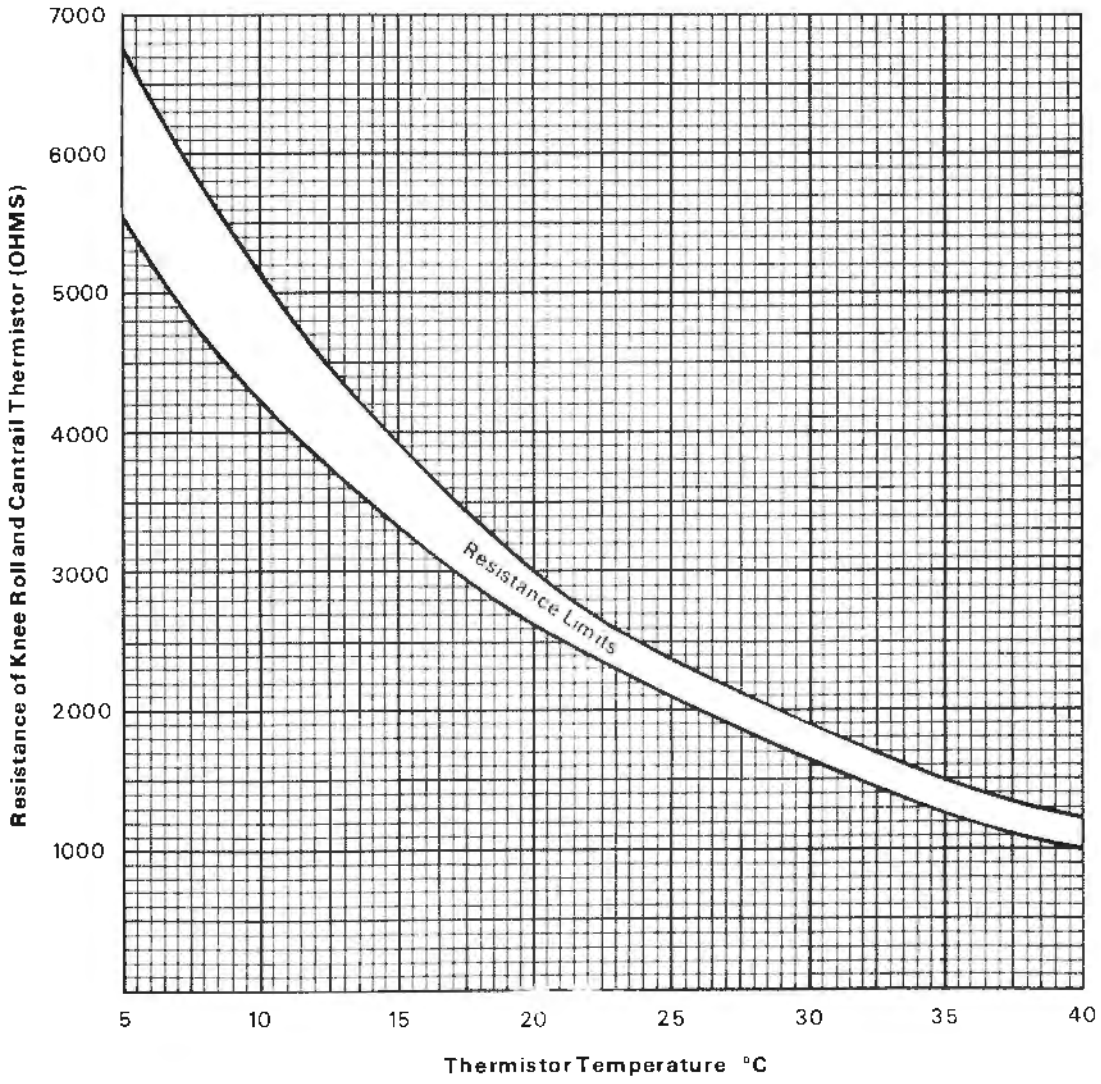

Graph 2

S 967

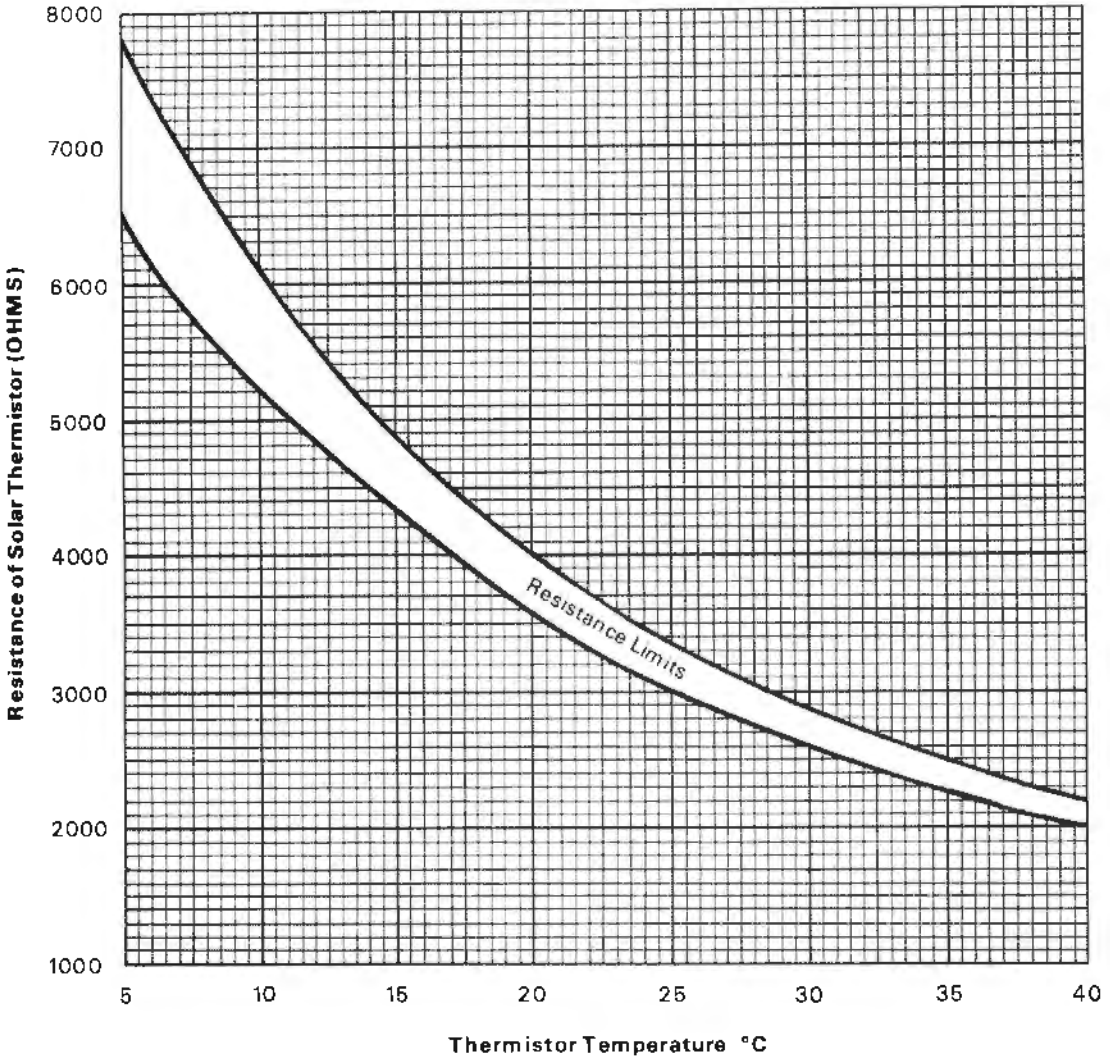

Graph 3

S 966

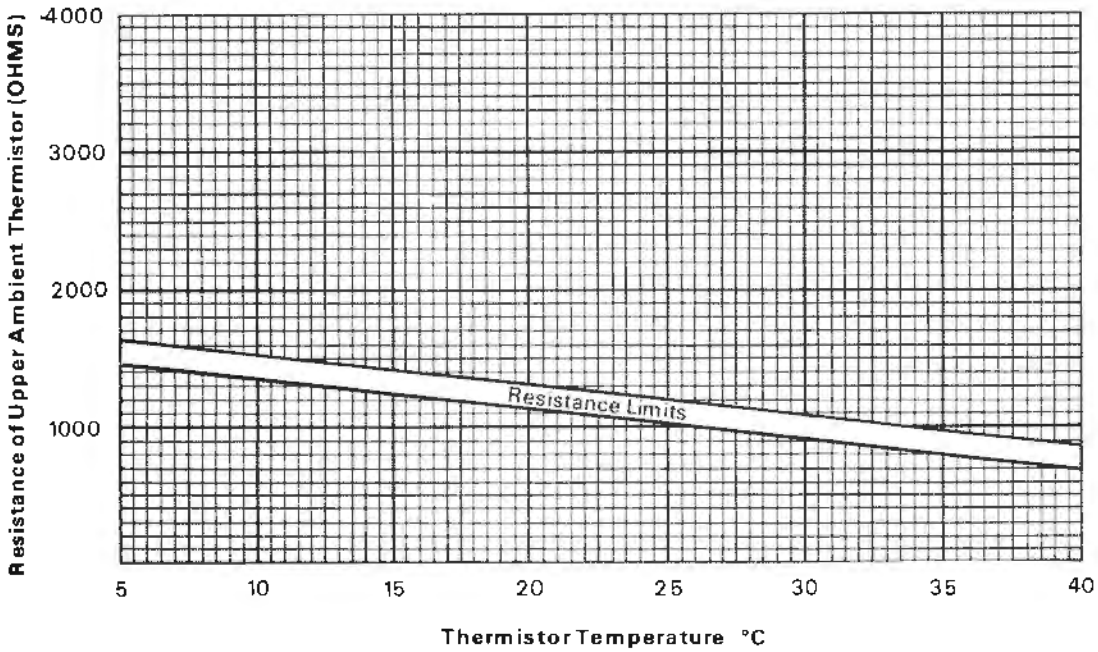

Graph 4

S 963

Printed in England
© Rolls-Royce Motors Limited 1978
September 1978
S.D. 4200

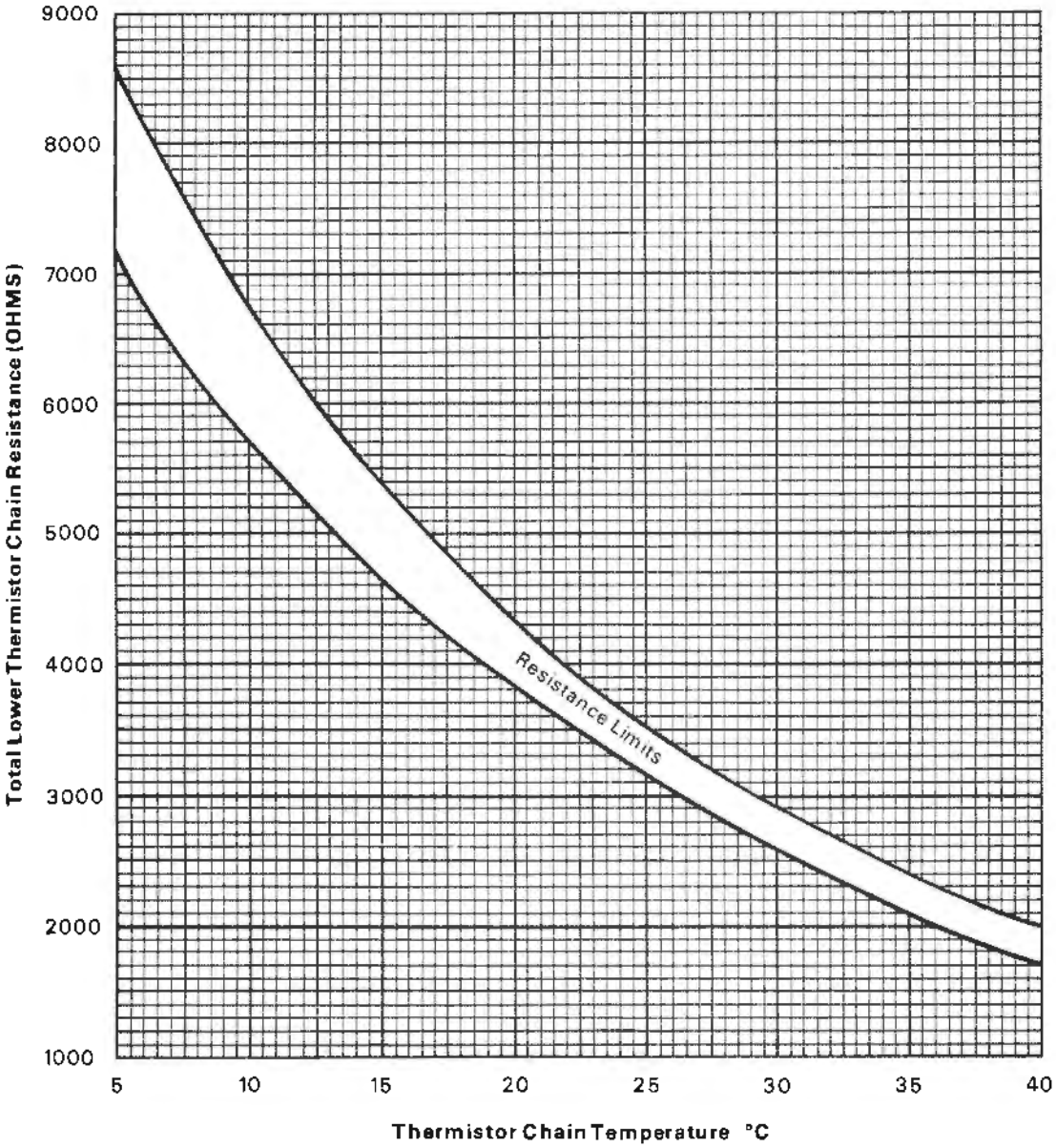

Graph 5

S 968

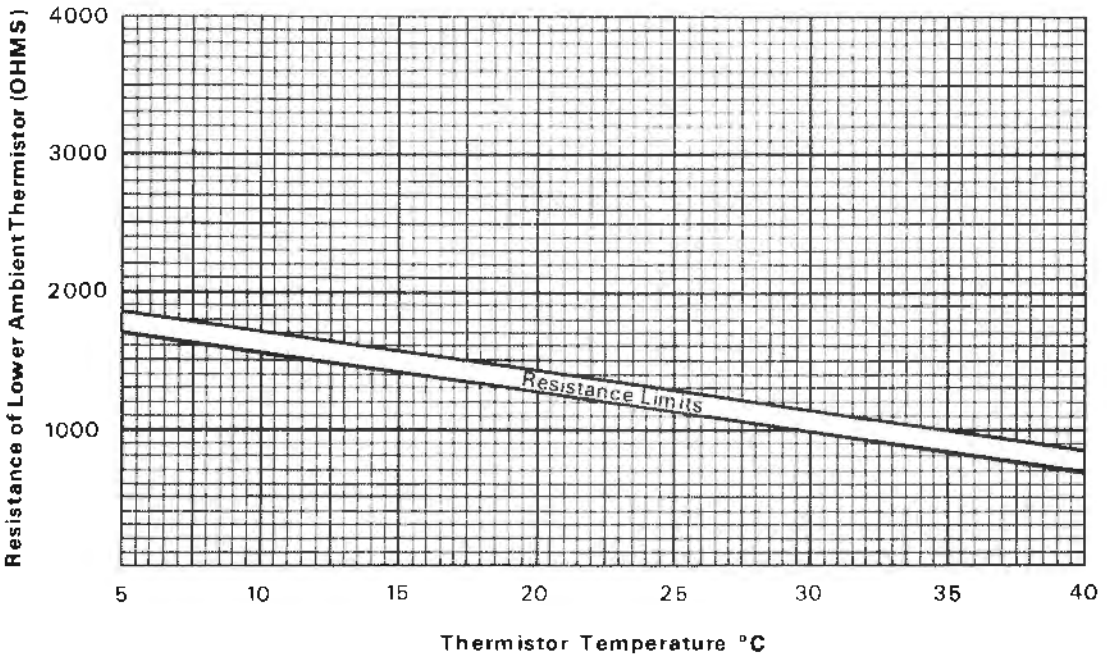

Graph 6

S 964

Section C7

System test and fault diagnosis

Upper sensor chain fault diagnosis
Fig. C38

If a cable fault is indicated when using this chart, refer to next page to isolate the fault.

Printed in England
© Rolls-Royce Motors Limited 1978
September 1978
T.S.D. 4200

Start

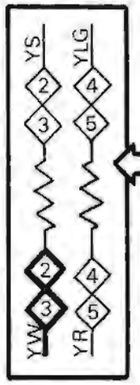

Upper sensor chain check. Set ACU switch to AUTO. Disconnect plug & measure resistance between yellow/white cable & a good earth. **Referring to graph 1, is the resistance correct?**

YES → Upper sensor chain correct. If temperature fault still exists check servo settings, water tap and lower sensor chain.

NO → Set ACU switch to DEF. **Does the resistance meter read more than 20 000Ω ?**

YES → **Cantrail sensor check** Disconnect the right-hand body socket. Measure the resistance between yellow/white cable in pin 3 and yellow/blue cable in pin 2. Referring to graph 2, is resistance correct?

NO → There is an earth fault in the sensor chain. Disconnect the right-hand body socket and isolate fault. When fault is found go back to START to check for other faults.

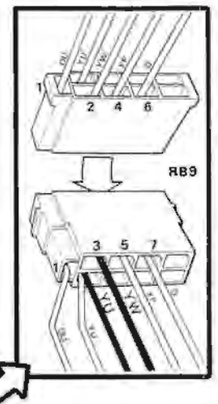

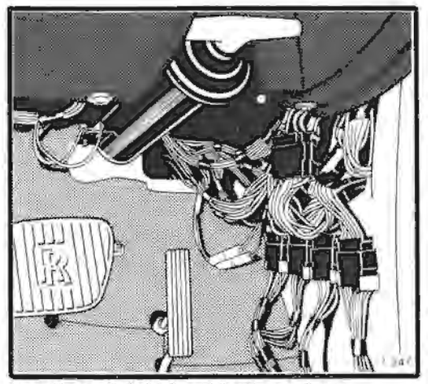

Location of right-hand body sockets

NO → Remove the cantrail sensor cover. Disconnect the cantrail sensor and measure the resistance of the sensor at the sensor connector. **Referring to graph 2, is the resistance correct?**

YES → **Cantrail sensor is correct** Fault is in cables or connectors. After finding fault, reconnect body socket & go back to START to check for other faults.

NO → Fit new sensor, reconnect body socket. Go back to START to check for other faults.

YES → The cantrail sensor is correct, now check solar sensor.

Solar sensor check Measure resistance between yellow/white cable in pin 2 and yellow/blue cable in pin 3. Referring to graph 3, is the resistance correct?

YES → Solar sensor is correct, now check ambient sensor.

NO → Remove top roll & disconnect sensor. Measure resistance of sensors at sensor leads. Referring to graph 3, is the resistance correct?

YES → **Solar sensor is correct.** Fault is in cables or connector. After finding fault, reconnect body socket & go back to START to check for other faults.

NO → Fit new sensor, reconnect body socket. Go back to START to check for other faults.

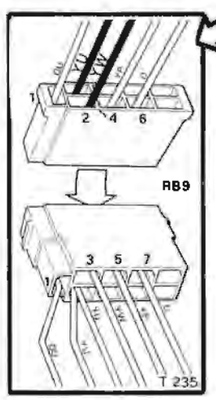

These are landmarks. They show which part of the system has been proved correct.

Ambient sensor check Measure resistance between yellow/blue cable in pin 2 and orange cable in pin 7. **Referring to graph 4, is the resistance correct?**

YES → Ambient sensor is correct

Intermittent fault in cables or connectors in sensor chain. Ensure that all connectors are mated correctly then go back to START.

NO → Remove trim on right-hand side of boot. Disconnect yellow/blue & orange lucar connectors. Measure resistance of cables to sensors. **Referring to graph 4, is the resistance correct?**

YES → **Ambient sensor is correct.** Fault is in cables or connectors from body socket. After finding fault, reconnect Lucar & body sockets, go back to START to check for other faults.

NO → Fit new sensors (upper & lower) & reconnect 'Lucar' connectors and body socket. Go back to START to check for other faults.

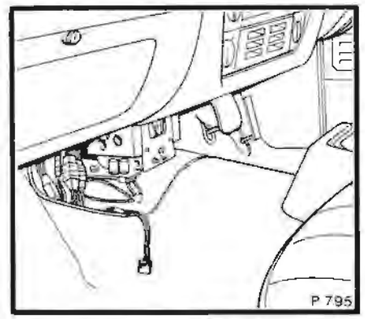

Location of sensor chain socket

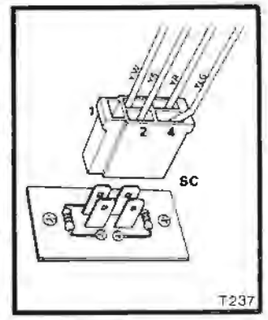

Sensor chain socket

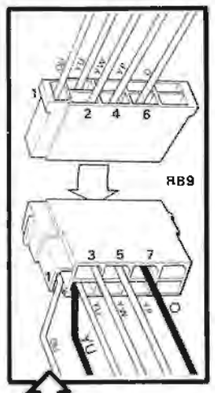

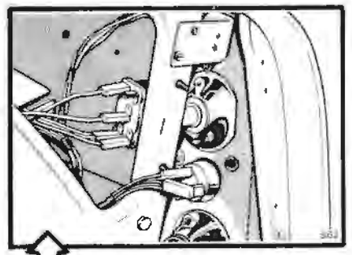

Location of ambient sensor connections

Section C7

System test and fault diagnosis

Upper sensor chain cable faults

Fig. C39

This chart enables the user to isolate a cable fault in the sensor chain by separately testing each cable for open circuit (broken cable) or short circuit (earth fault).

When a cable fault is suspected, disconnect the first cable as shown at the top of the chart, test it with the resistance meter and if it is satisfactory, reconnect it and test the next cable in the circuit. If a faulty cable is found, rectify the fault and measure the total sensor chain resistance to ensure that another fault does not exist.

If the fault is a short circuit, the simplest remedy is to sever the cable at each end by cutting it or disconnecting it and insulating the ends with tape, then insert a new length of cable.

Printed in England
© Rolls-Royce Motors Limited 1978
September 1978
T.S.D. 4200

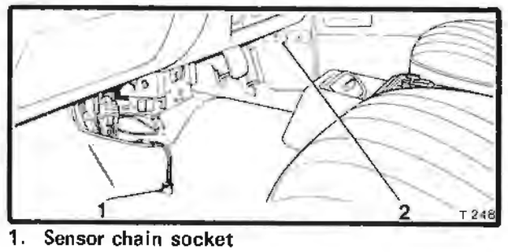

1. Sensor chain socket
2. Right-hand body sockets

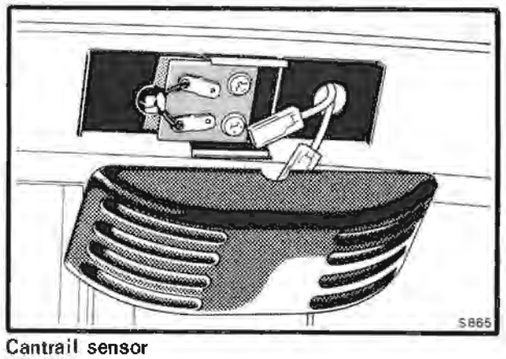

Cantrail sensor

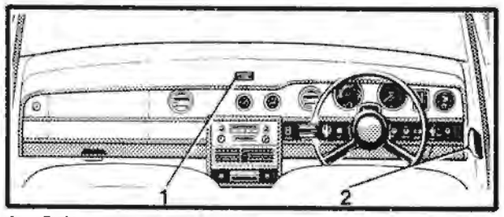

1. Solar sensor
2. Cantrail sensor

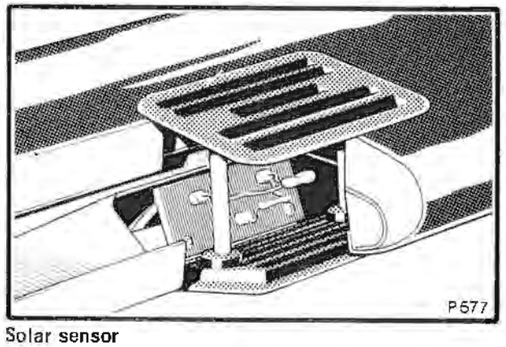

Solar sensor

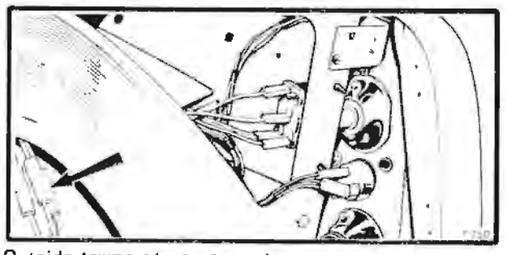

Outside temperature connectors

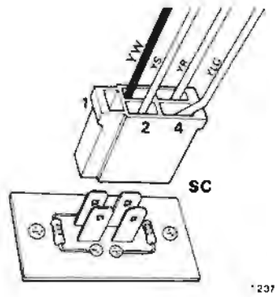

Sensor chain socket

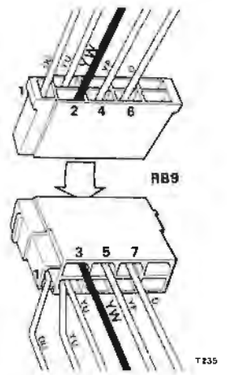

Right-hand body socket

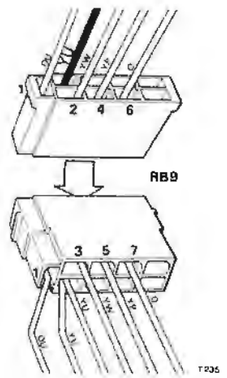

Right-hand body socket

Resistance meter connection

Connect meter between pin 3 of sensor chain socket (yellow/white cable) and 'A' post earth.

Connect meter between pin 3 of sensor chain socket and pin 2 of right-hand body socket (yellow/white cable).

Connect meter between pin 3 of right-hand body socket and yellow/white cable at cantrail sensor.

Connect meter between yellow/white cable at cantrail sensor and a good earth.

Connect meter between yellow/blue connection at solar sensor and pin 3 at right-hand body socket.

Connect meter between pin 3 at right-hand body socket and 'A' post earth.

Connect meter between yellow/blue cable at cantrail sensor and yellow/blue cable at outside temperature sensor.

Connect meter between yellow/blue cable at outside temperature sensor and boot earth.

Fault location

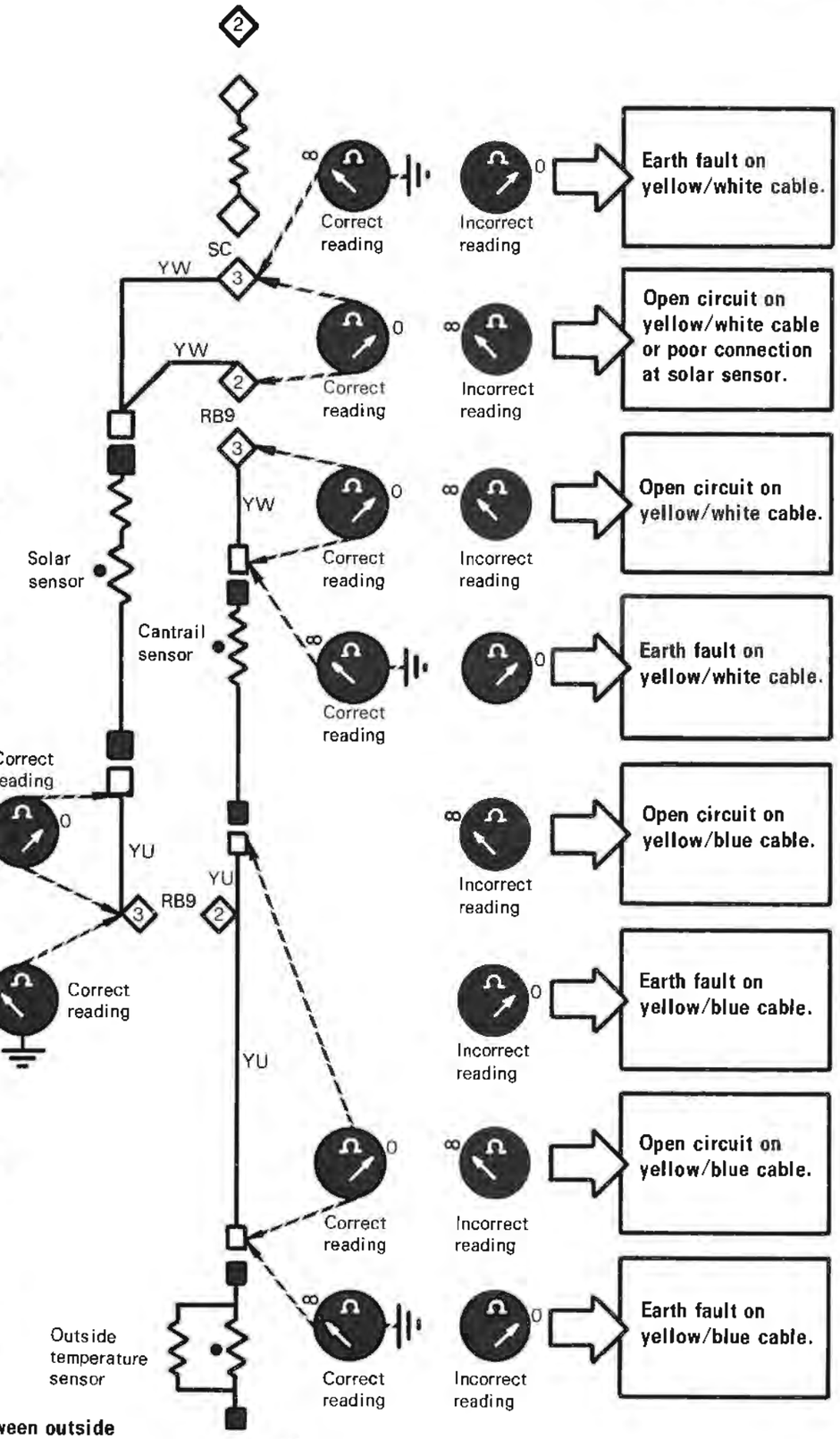

For cable faults on the orange cable between outside temperature sensor and ACU switch, refer to chart for lower sensor chain.

∞ = Meter reading over 100 000 Ω

Printed in England
© Rolls-Royce Motors Limited 1978
September 1978
T.S.D. 4200

Section C7

System test and fault diagnosis

Lower sensor chain fault diagnosis

Fig. C40

If a cable fault is indicated when using this chart, refer to next page to isolate the fault.

Printed in England

© Rolls-Royce Motors Limited 1978

September 1978

T.S.D. 4200



Location of sensor chain socket

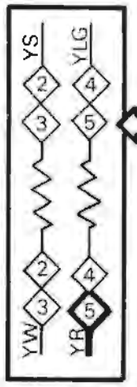

Sensor chain socket schematic diagram

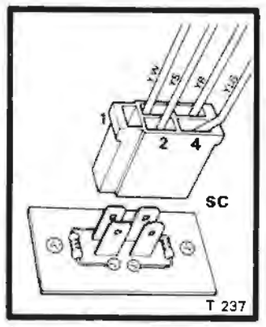

Sensor chain socket

Start

Lower sensor chain check. Set ACU switch to AUTO. Disconnect servo trim cover plug & measure resistance between yellow/red wire & a good earth. **Referring to graph 5, is the resistance correct?**

YES

Lower sensor chain is correct
If temperature fault still exists, check servo settings, water tap and upper sensor chain.

NO

Set ACU switch to DEF. **Does the resistance meter read more than 20 000Ω ?**

YES

NO

There is an earth fault in the sensor chain. Disconnect the right-hand body socket and isolate fault. When fault is found, go back to START to check for other faults.

Knee roll sensor check
Disconnect the right-hand body socket & measure the resistance between the yellow/purple cable in pin 4 and the yellow/red cable at servo plug. **Referring to graph 2, is the resistance correct?**

YES

The knee roll sensor is correct, now check ambient sensor.

NO

Unfasten the fuseboard cover. Disconnect the Lucar connector from the knee roll sensor and measure the resistance across the sensor. **Referring to graph 2, is the resistance correct?**

YES

Knee roll sensor is correct
Fault is in cables or connectors. After finding the fault, reconnect body socket, go back to START to check for other faults.

NO

Fit new sensor, reconnect body socket. Go back to START to check for other faults.

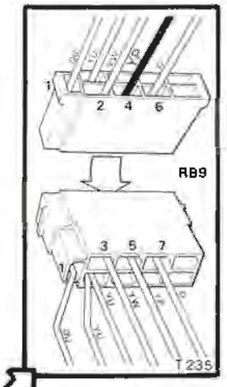

Ambient sensor check
Measure resistance between yellow/purple in pin 5 and orange cable in pin 7. **Referring to graph 6, is resistance correct?**

YES

Ambient sensor is correct

Go back to START to check for other faults.

NO

Remove trim on right-hand side of boot. Disconnect orange and yellow/purple Lucar connectors. Measure the resistance of cables to sensors. **Referring to graph 6, is the resistance correct?**

YES

Ambient sensor is correct
Fault is in cables or connectors from body socket. After finding fault, reconnect Lucar and body sockets, go back to START to check for other faults.

NO

Fit new sensors (upper & lower), reconnect Lucar connectors and body socket. Go back to START to check for other faults.

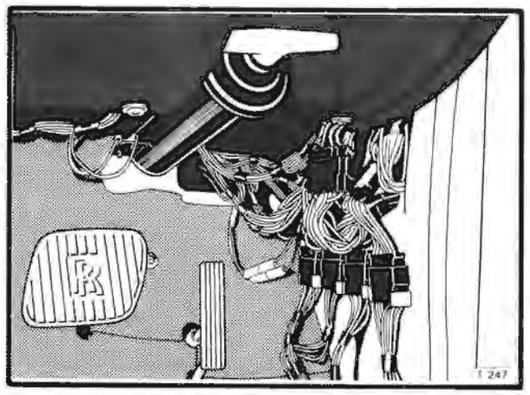

Location of right-hand body sockets

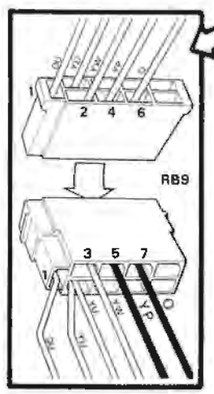

Right-hand body socket

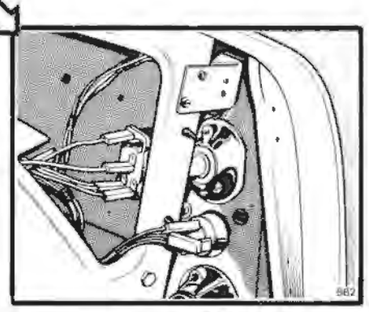

Location of ambient sensor connection

These are landmarks. They show which part of the system has been proved correct.

Printed in England

© Rolls-Royce Motors Limited 1978

September 1978
T.S.D. 4200

Section C7

System test and fault diagnosis

Lower sensor chain cable faults

Fig. C41

This chart enables the user to isolate a cable fault in the sensor chain by separately testing each cable for open circuit (broken cable) or short circuit (earth fault).

When a cable fault is suspected, disconnect the first cable as shown at the top of the chart, test it with the resistance meter and if it is satisfactory, reconnect it and test the next cable in the circuit. If a faulty cable is found, rectify the fault and measure the total sensor chain resistance to ensure that another fault does not exist.

If the fault is a short circuit, the simplest remedy is to sever the cable at each end by cutting it or disconnecting it and insulating the ends with tape, then insert a new length of cable.

Printed in England

© Rolls-Royce Motors Limited 1978

T.S.D. 4200 September 1978

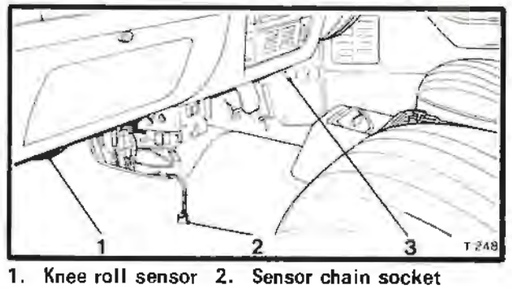

1. Knee roll sensor 2. Sensor chain socket
3. Right-hand body sockets

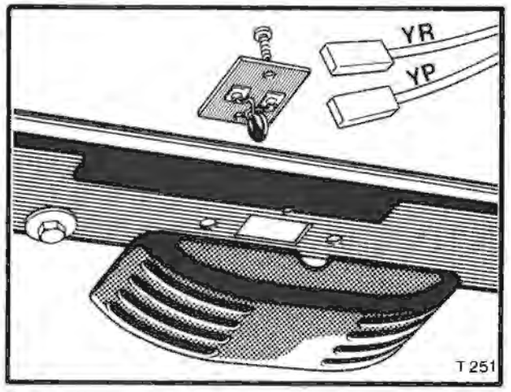

Knee roll sensor

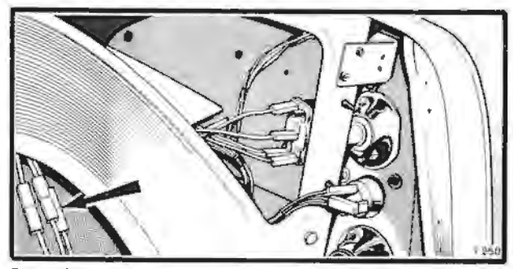

Outside temperature connectors

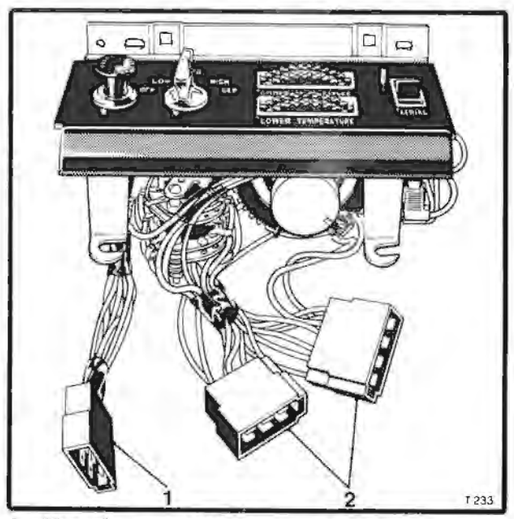

1. Hazard switch socket
2. A.C.U. sockets

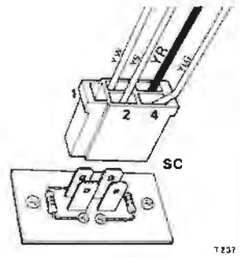

Sensor chain socket

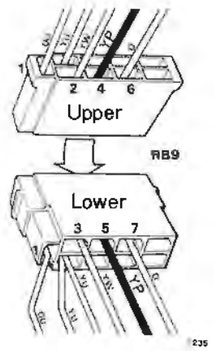

Right-hand body socket

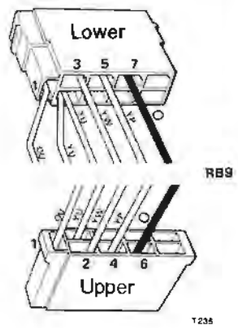

Right-hand body socket

Resistance meter connection

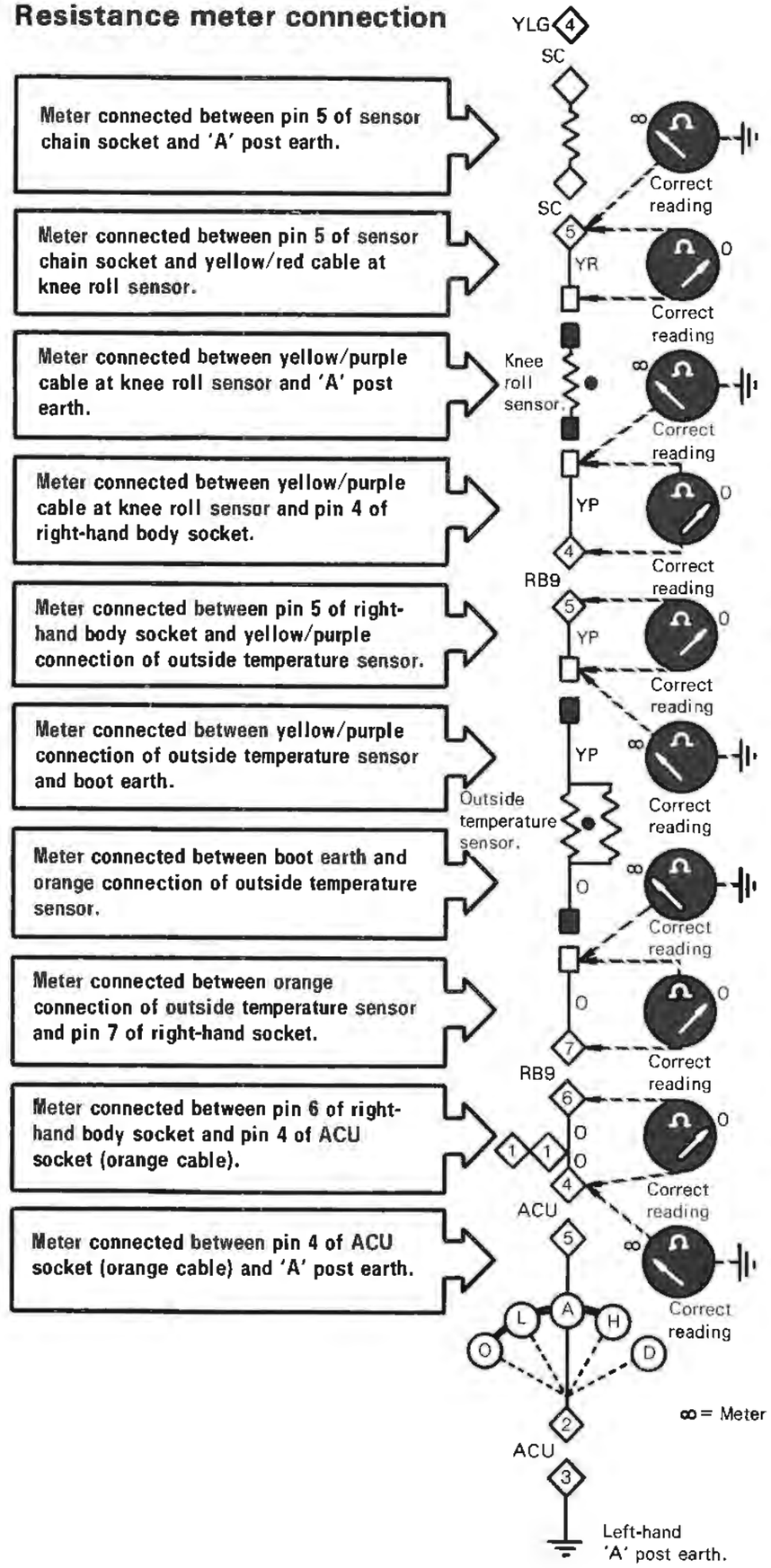

Meter connected between pin 5 of sensor chain socket and 'A' post earth.

Meter connected between pin 5 of sensor chain socket and yellow/red cable at knee roll sensor.

Meter connected between yellow/purple cable at knee roll sensor and 'A' post earth.

Meter connected between yellow/purple cable at knee roll sensor and pin 4 of right-hand body socket.

Meter connected between pin 5 of right-hand body socket and yellow/purple connection of outside temperature sensor.

Meter connected between yellow/purple connection of outside temperature sensor and boot earth.

Meter connected between boot earth and orange connection of outside temperature sensor.

Meter connected between orange connection of outside temperature sensor and pin 7 of right-hand socket.

Meter connected between pin 6 of right-hand body socket and pin 4 of ACU socket (orange cable).

Meter connected between pin 4 of ACU socket (orange cable) and 'A' post earth.

Fault location

Incorrect reading → Earth fault on yellow/red cable.

Incorrect reading → Open circuit on yellow/red cable.

Incorrect reading → Earth fault on yellow/purple cable.

Incorrect reading → Open circuit on yellow/purple cable.

Incorrect reading → Open circuit on yellow/purple cable.

Incorrect reading → Earth fault on yellow/purple cable.

Incorrect reading → Earth fault on orange cable.

Incorrect reading → Open circuit on orange cable.

Incorrect reading → Open circuit on orange cable.

Incorrect reading → Earth fault on orange cable.

∞ = Meter reading over 100 000 Ω

Section C7

System test and fault diagnosis

Servo fault diagnosis Sheet 1 of 4
Fig. C42

Printed in England
© Rolls-Royce Motors Limited 1978

Printed in England
© Rolls-Royce Motors Limited 1978
T.S.D. 4200 September 1978

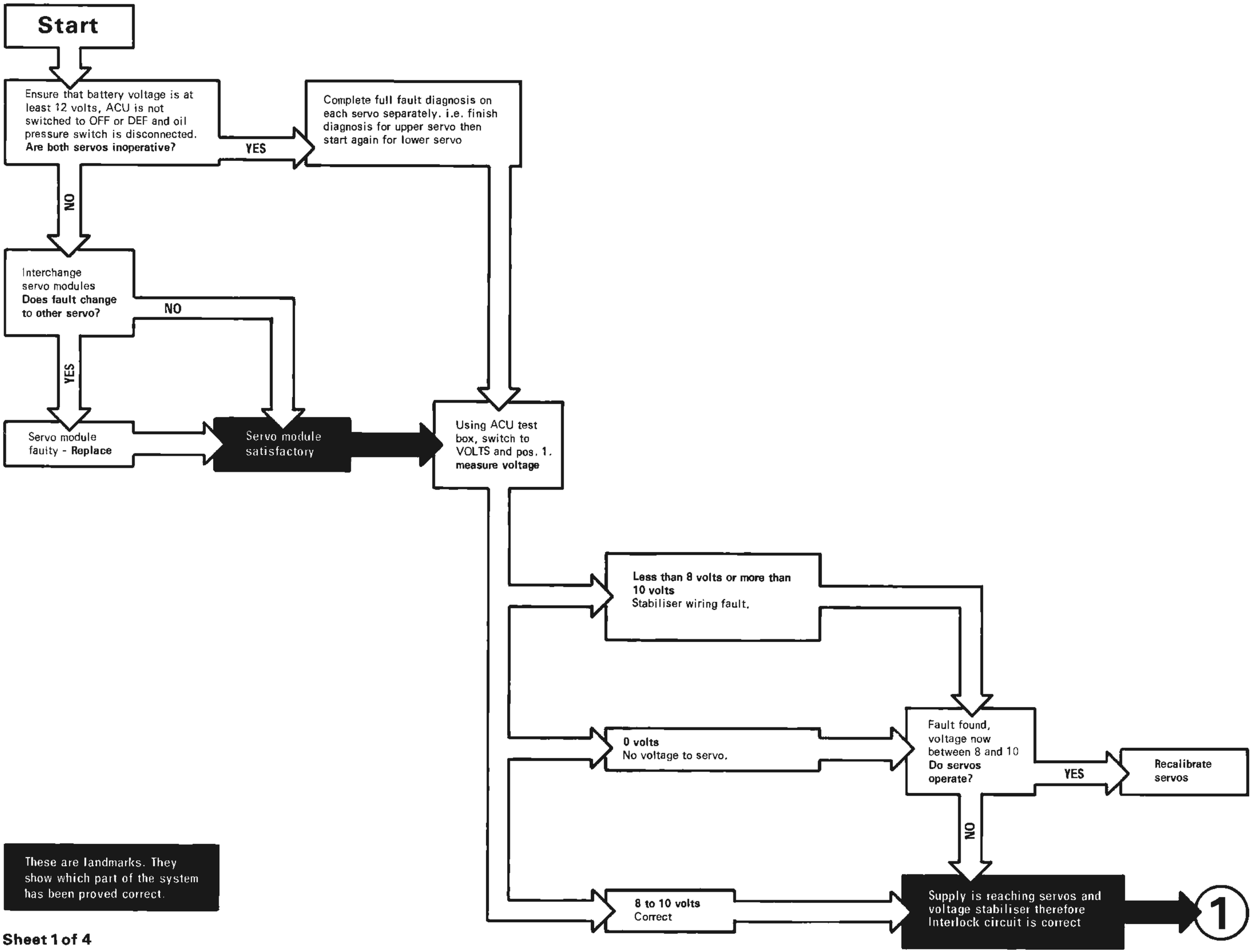

These are landmarks. They show which part of the system has been proved correct.

Section C7

System test and fault diagnosis

Servo fault diagnosis Sheet 2 of 4

Fig. C42 continued

Printed in England

© Rolls-Royce Motors Limited 1978

September 1978

Printed in England
© Rolls-Royce Motors Limited 1978

T.S.D. 4200 September 1978

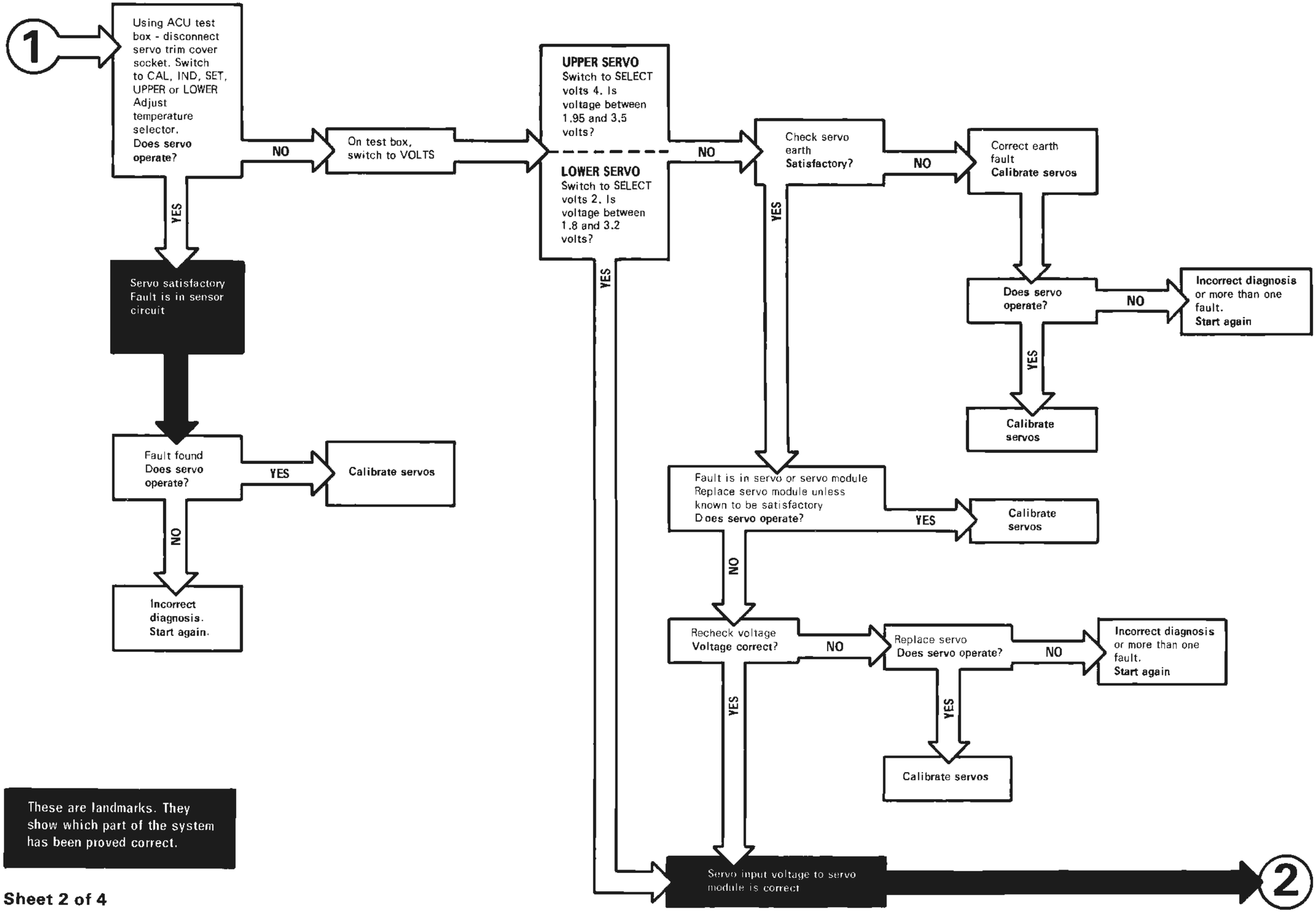

These are landmarks. They show which part of the system has been proved correct.

Section C7

System test and fault diagnosis

Servo fault diagnosis Sheet 3 of 4
Fig. C42 continued

Printed in England
© Rolls-Royce Motors Limited 1978
T S D 4300 September 1978

Printed in England

© Rolls-Royce Motors Limited 1978

T.S.D. 4200 September 1978

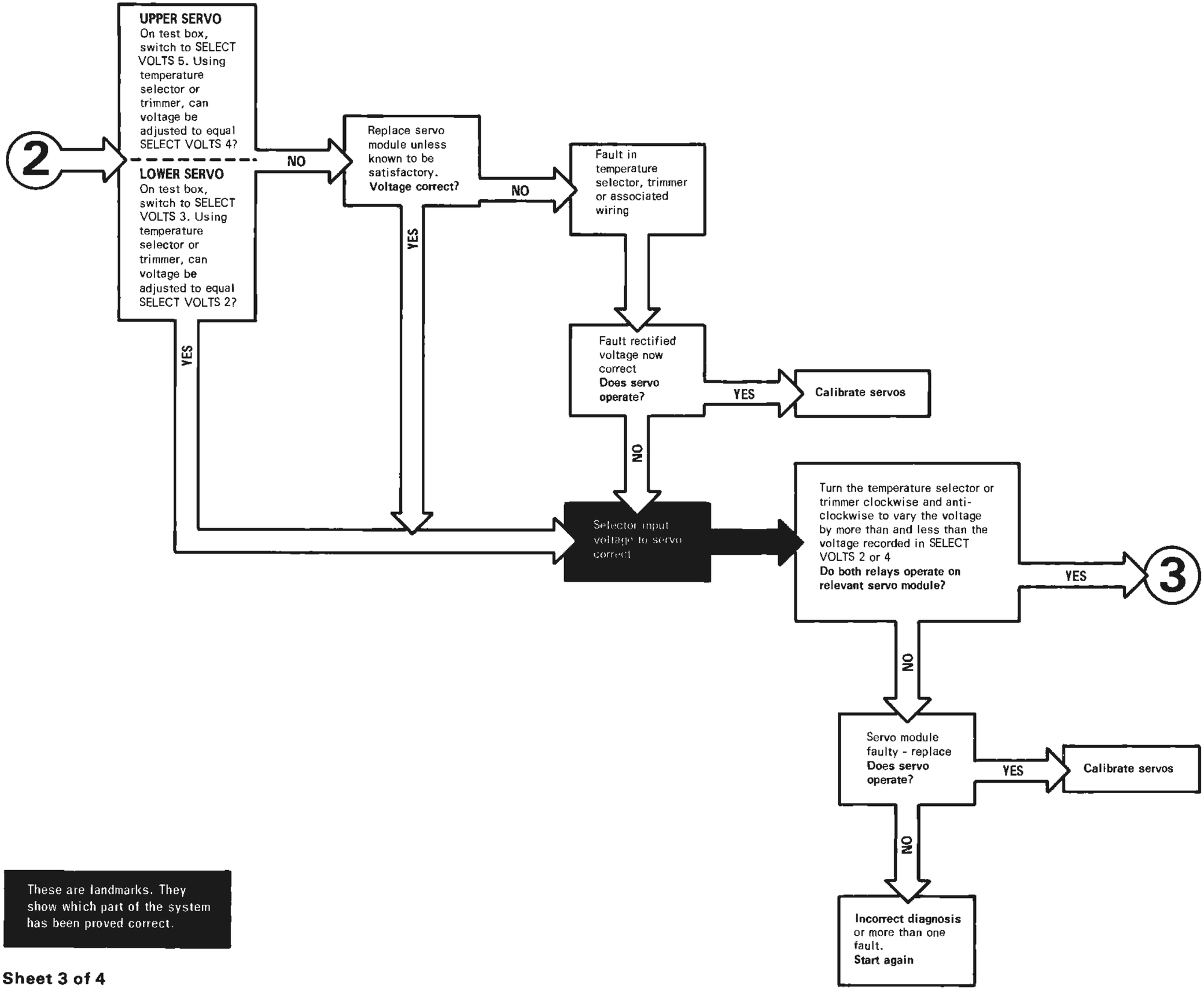

These are landmarks. They show which part of the system has been proved correct.

Section C7

System test and fault diagnosis

Servo fault diagnosis Sheet 4 of 4
Fig. C42 continued

Printed in England
© Rolls-Royce Motors Limited 1978

Printed in England

© Rolls-Royce Motors Limited 1978

T.S.D. 4200 September 1978

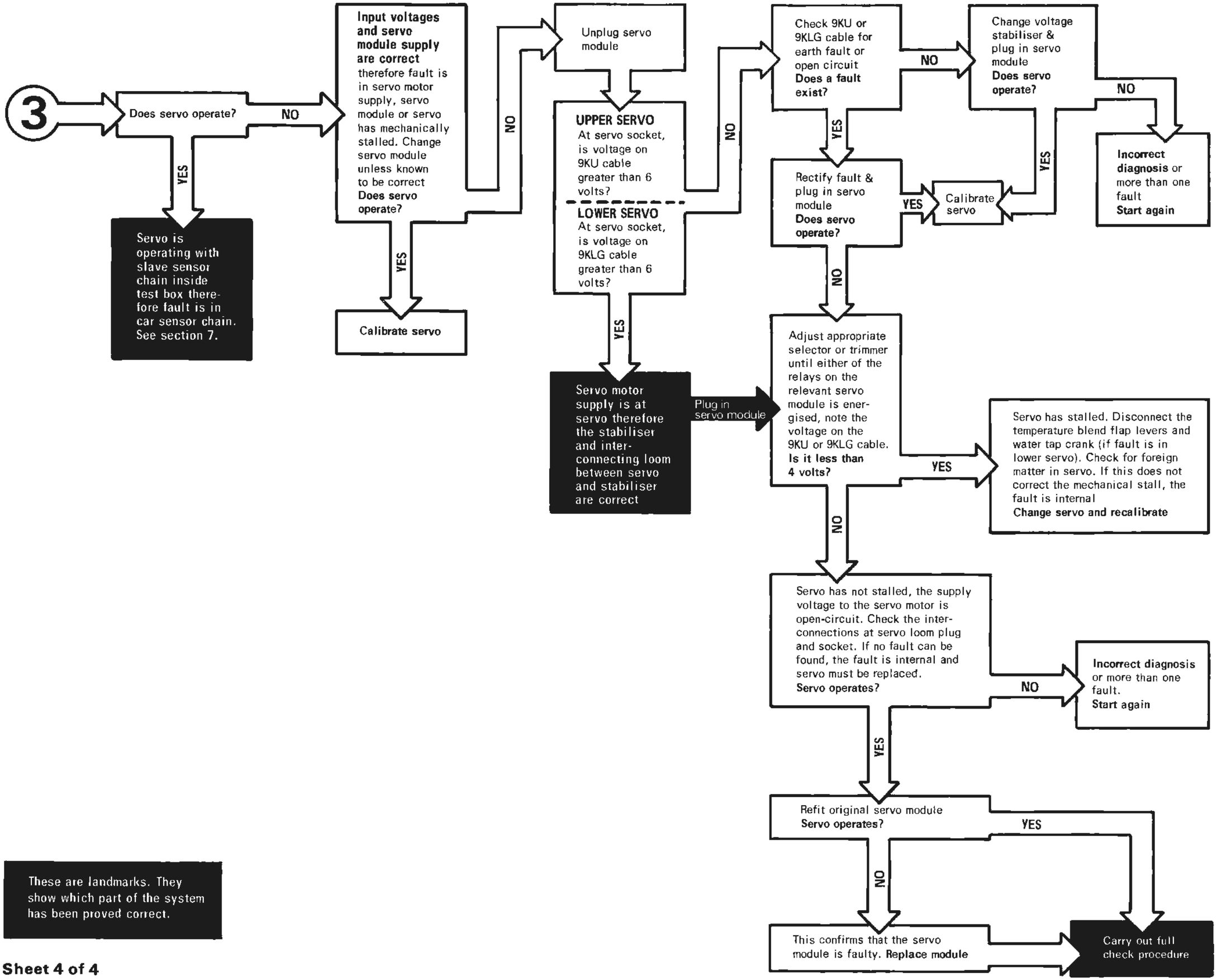

These are landmarks. They show which part of the system has been proved correct.

Section C7

System test and fault diagnosis

Fans inoperative in all situations

Fig. C43

Printed in England

© Rolls-Royce Motors Limited 1978

T.S.D. 4200 September 1978

Printed in England

© Rolls-Royce Motors Limited 1978

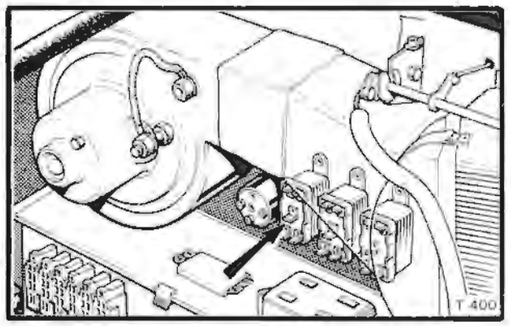

Fan and compressor relay

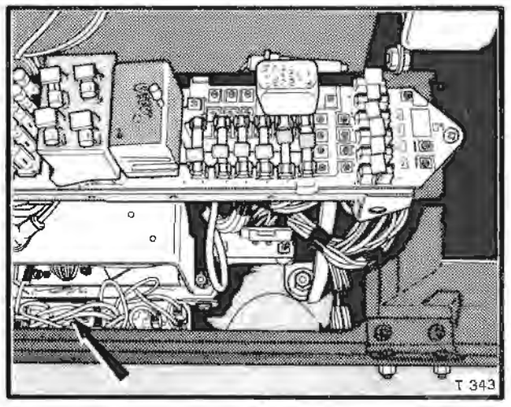

Fan switch-off relay right-hand drive cars. For left-hand drive cars, see Section C4.

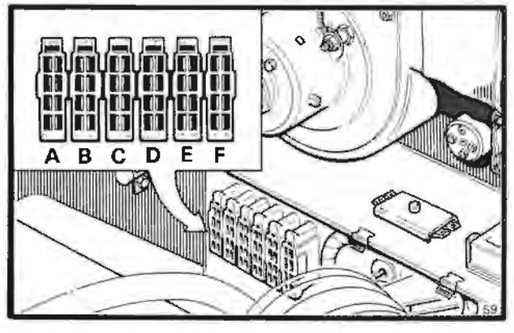

Toeboard socket (engine side)

Start

ACU switched on. Disconnect oil pressure switch. Disconnect blue/black cable at fan module switch-off relay. Check the fan & compressor fuse and fuse number 3.
Is any fuse blown?

YES → Replace fuse (or fuses).
Does the fuse blow again?

YES → Earth fault on cables from fuses or ACU switch faulty.

NO → **Do the fans operate?**

YES → Test the ACU for correct operation.

NO → Go to START on 'Fans inoperative in LOW, AUTO and HIGH'.

NO → At the fan motors, connect a test lamp between the yellow/green cable and a good earth.
Does the lamp light?

YES → Fan motors faulty. Remove, test & renew if necessary.

NO → At right-hand toeboard socket E, (engine side), connect a test lamp between the yellow/black cable in pin 2 and the right-hand valance earth.
Does the lamp glow?

NO → Connect a test lamp between the yellow/black cable on C1 of fan and compressor relay, and earth.
Does the lamp light?

YES → Fault in yellow/black cable from fan & compressor relay to fan speed module. Permanently connect a cable between C1 of relay & pin 2 of toeboard socket E.

NO → **Is the yellow cable at the fan & compressor relay live?**

NO → Open circuit on yellow cable or faulty connection in fan & compressor fuse or fuse holder.

YES → **Is the brown/pink cable at fan and compressor relay live?**

NO → Test for live feed on the brown/pink cable at ACU switch and right-hand toeboard socket D.

YES → Connect W2 (brown/blue cable) of fan and compressor relay to earth.
Does the relay operate?

YES → Open circuit on brown/blue cable between fan and compressor relay and starter motor.

NO → Fan and compressor relay faulty.

YES → At the fan speed module, connect a test lamp between the yellow/black cable and earth.
Does the lamp light?

YES → Replace fan speed module. If fans do not operate then either a second fault exists or incorrect diagnosis has been made. Go back to START.

NO → Open circuit in yellow/black cable or at toeboard socket.

Section C7

System test and fault diagnosis

Fans inoperative in LOW AUTO and HIGH

Fig. C44

Printed in England

© Rolls-Royce Motors Limited 1978

T.S.D. 4200 September 1978

Start

Switch ACU to DEF. Start car engine.

NO

Do fans start after approximately 13 seconds? — YES → The fans are satisfactory.

NO

Switch ACU to AUTO. Do fans start working? — YES → ACU switch faulty or wiring fault.

NO

Disconnect the blue/black cable at fan module switch-off relay. Do fans operate? — NO → Refer to 'Fans inoperative in all situations'.

YES

The fans and fan module are satisfactory.

At fan delay relay, disconnect the yellow/pink cable from C2. Do the fans operate? — YES → Fan delay relay or ACU switch faulty. Check for earth fault on orange cable from relay to switch.

NO

Disconnect the yellow/pink cable from the fan module switch-off relay. Do the fans operate? — YES → Earth fault on cables from relay to oil pressure switch.

NO

Fan module switch-off relay or earth fault on blue/black cable from fan module to fan module switch-off relay

These are landmarks. They show which part of the system has been proved correct.

The fans are satisfactory.

Switch ACU to AUTO. At the sensor chain socket, connect a link from the yellow/white cable to earth. (Servo is now in 'facia' mode). **Do not disconnect the socket. Do the fans operate?** — NO → Verify that upper servo is functioning. 25% microswitch in upper servo not operating. Refer to Servo Fault Diagnosis. At the fan delay relay, check the yellow cable to W2. This should NOT be live. → If the yellow cable is live and the servo is operating correctly, there is a fault on the cables from servo to fan delay relay.

YES

Remove the temporary earth link from the yellow/white cable. Disconnect the fan delay thermostat. (Servo is now in 'screen' mode). **Do the fans operate?** — YES → If the coolant temperature is above 44 °C, the fan delay thermostat is faulty. Reconnect sensor chain socket.

NO

Check the lower quantity flap. **Is it fully open?** — NO → Lower quantity flap, actuator or wiring is faulty. Refer to chart for Lower Quantity Flap.

YES

Disconnect the right-hand 'A' post earth. **Do the fans operate?** — NO → Earth fault on the yellow/green cable from fan delay relay to lower quantity microswitch.

YES

Lower quantity microswitch is faulty or needs adjusting. Replace 'A' post earth, remove the lower knee roll and manually operate the microswitch. **Do the fans operate?** — YES → Adjust microswitch to operate fans when flap is fully open.

NO

Change microswitch & adjust it to operate the fans when the flap is fully open.

Verify that engine coolant is hot. Reconnect the fan delay thermostat. **Do the fans operate?** — NO → Earth fault on the yellow/brown cable from diode to thermostat or from diode to lower quantity relay.

YES

Reconnect sensor chain socket.

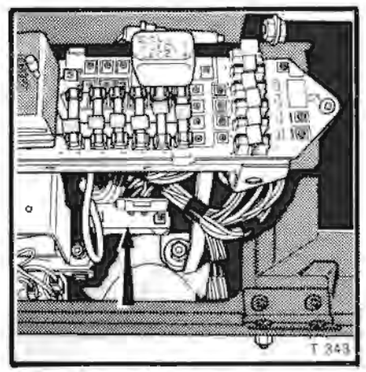

Diode board right-hand drive cars

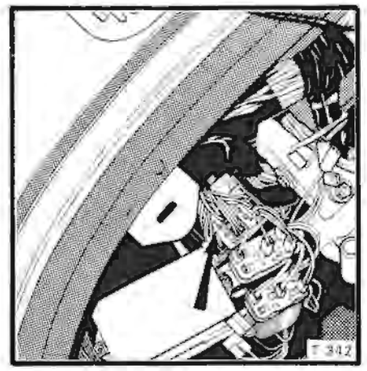

Diode board left-hand drive cars viewed with top roll removed

Section C7

System test and fault diagnosis

Fan speed does not vary

Fig. C45

Printed in England
© Rolls-Royce Motors Limited 1978
T S D 4300 September 1978

Printed in England
© Rolls-Royce Motors Limited 1978
T.S.D. 4200 September 1978

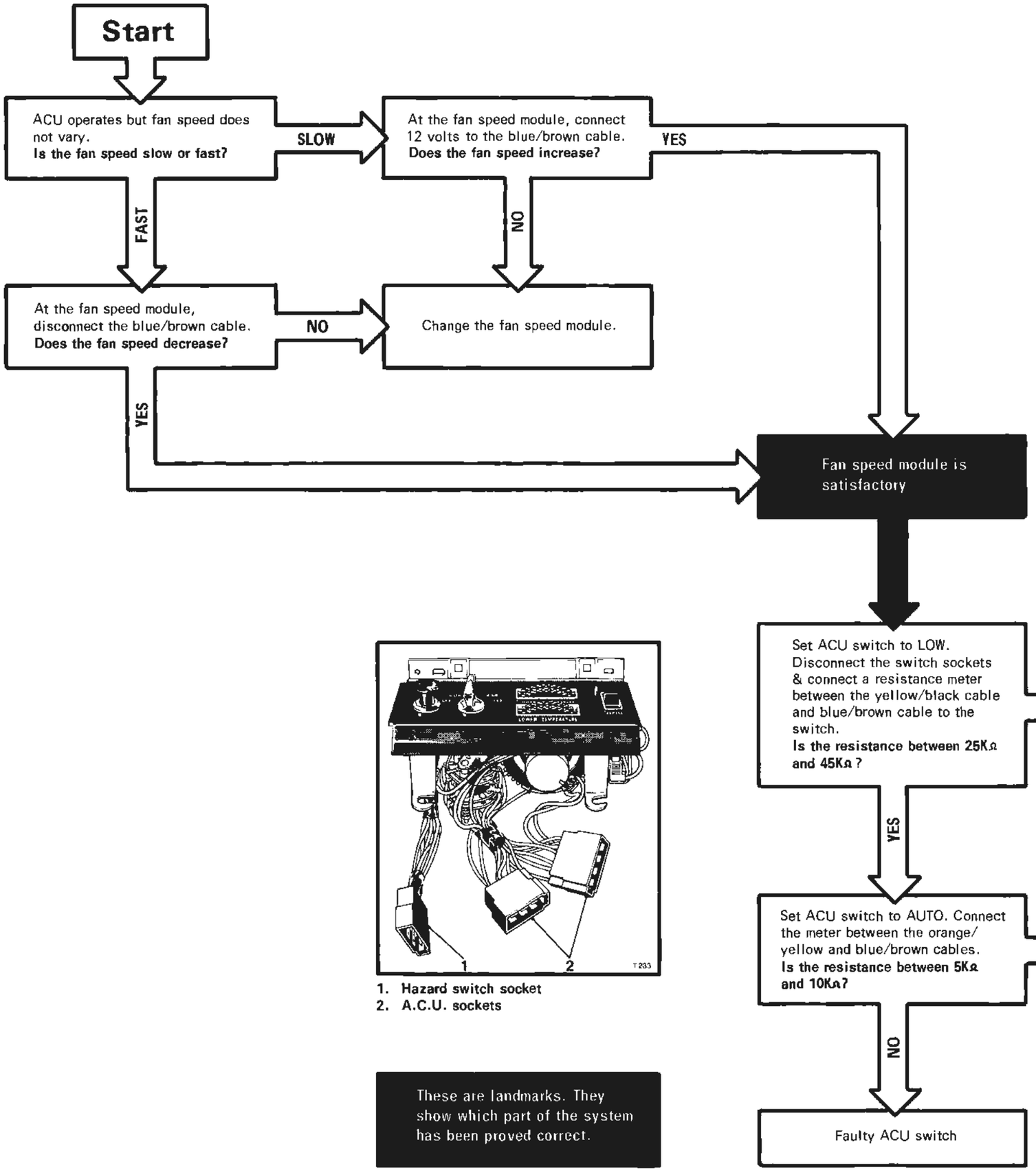

1. Hazard switch socket
2. A.C.U. sockets

These are landmarks. They show which part of the system has been proved correct.

Section C7

System test and fault diagnosis

Mode flap inoperative

Fig. C46

Printed in England
© Rolls-Royce Motors Limited 1978
TSD 4000 September 1978

Printed in England

© Rolls-Royce Motors Limited 1978

September 1978

T.S.D. 4200

Start

Disconnect the oil pressure switch and the fan delay thermostat. Switch the ACU to AUTO and connect a 12 volt test lamp between the pink cable 'flying lead' to the upper servo and a good earth.
Does the lamp light?

NO → Using the test lamp test for 12 volts on the pink cable at toeboard socket D, (saloon and engine side) and C3 of servo isolation relay. If 12 volts is not present, check the Interlock circuit.

YES ↓

Remove the test lamp and connect it between orange/purple cable of the upper servo plug and earth. Disconnect the sensor chain socket. (Servo moves to 'Screen' mode).
Is the lamp lit?

YES → Reconnect the sensor chain socket and connect a temporary earth link from the yellow/white cable of the socket to earth. (Servo moves to 'Facia' position).
Is the lamp extinguished?

NO → Upper servo or sensor chain faulty. Refer to appropriate flow chart or test procedure.

YES ↓

Remove the test lamp and connect it to the orange/blue cable of the socket and earth.
Is the lamp lit?

YES → The servo is satisfactory. At the actuator, connect the test lamp between the orange/blue cable and earth.
Does the lamp light?

NO → Open circuit in orange/blue cable or connectors.

YES ↓

Remove the temporary earth from the sensor chain socket and disconnect the socket. Connect the test lamp between the orange/red cable of the actuator and earth.
Does the lamp light?

YES → **Has the actuator moved?**

NO → Check the tightness of the pinch-bolt connecting the flap to the actuator and set-up the linkage. Verify that the flap is not mechanically stalling the actuator.

YES ↓

At the actuator, connect the black cable to a good earth.
Does the actuator operate?

YES → Faulty actuator.

NO → Faulty earth. Check the black cable and left-hand 'A' post earth.

NO ↓

Open circuit in orange/red cable from actuator to diode, or open circuit in orange/purple cable from diode to servo, or diode faulty. Test for 12 volts at diode.

NO ↓

Test for 12 volts at the orange/red and orange/purple cables at the diode block. Test for 12 volts at the orange/purple cable at the upper servo. If the 12 volts is not present there is a fault in the servo or upper sensor chain, refer to test procedure or Flow charts.

NO ↓

Servo faulty.

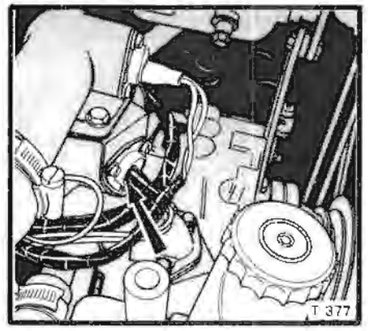

Fan delay thermostat



Diode board left-hand drive cars
Viewed with top roll removed

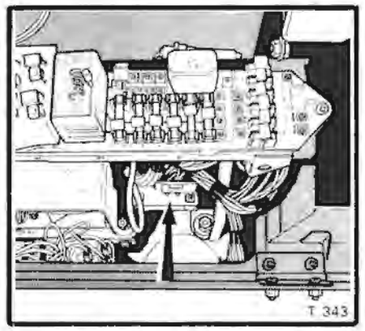

Diode board right-hand drive cars

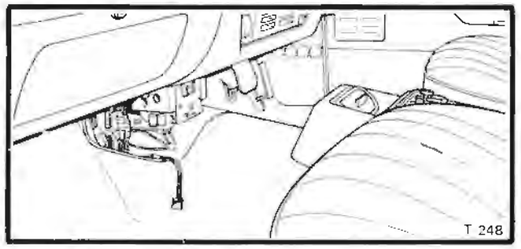

Location of sensor chain socket

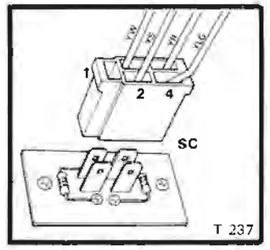

Sensor chain socket

These are landmarks. They show which part of the system has been proved correct.

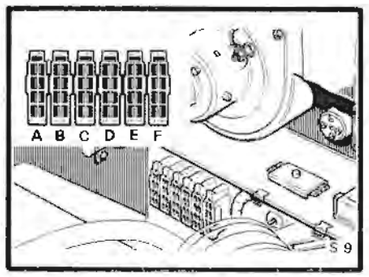

Toeboard sockets

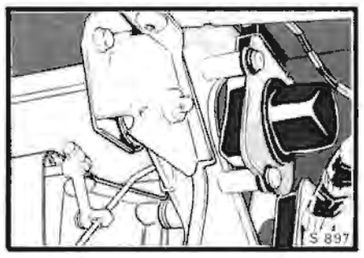

Mode flap actuator

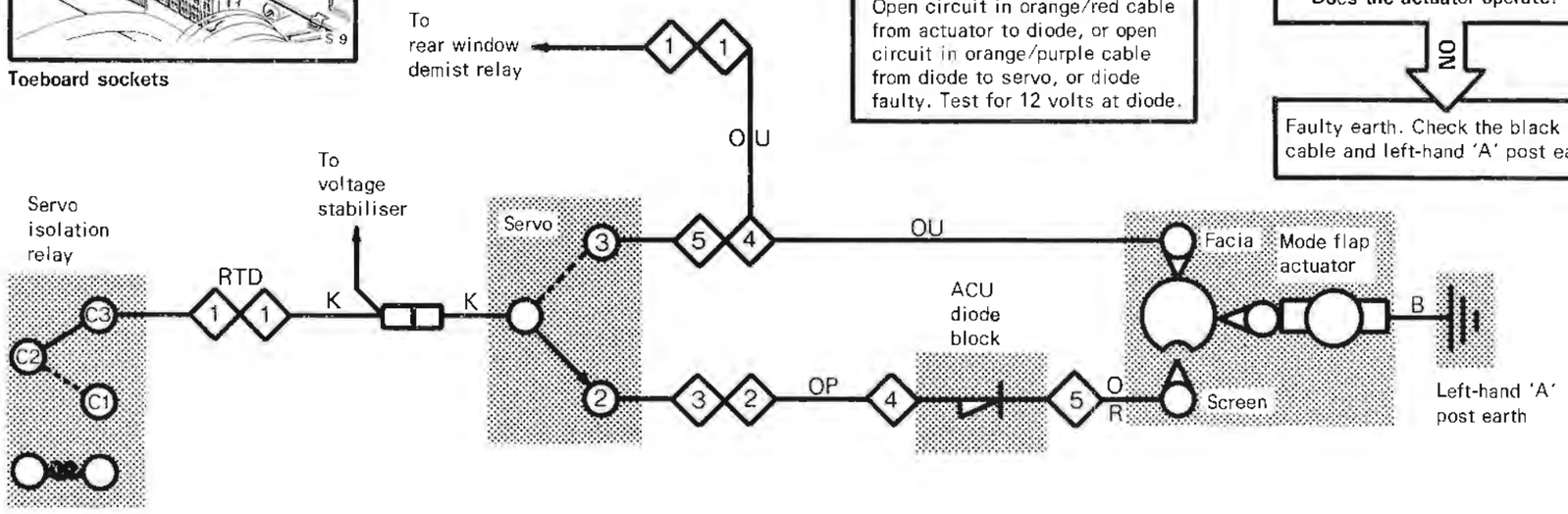

Section C7

System test and fault diagnosis

Recirculation flaps inoperative

Fig C47

Printed in England

© Rolls-Royce Motors Limited 1979

T.S.D. 4200 December 1979

© Rolls-Royce Motors Limited 1979

Printed in England

Start

Are both actuators inoperative?

NO → Using a test lamp, test for 12 volts at the faulty actuator and if it is the right-hand actuator that is faulty, also test for 12 volts on the orange/slate or orange/green cables as appropriate at the diode board. Check the earth connections at the 'A' post.

YES ↓

At the recirculation relay, connect a test lamp between the red/brown cable on C2 and a good earth.
Is the lamp lit?

NO → Test for a live feed on the red/brown cable at the ACU switch socket and the fuseboard.

YES ↓

Set the ACU switch to OFF. At the recirculation relay, connect the test lamp between earth and the orange/brown cable. At the servo, disconnect the blue/pink 'flying lead'.
Is the test lamp lit?

NO → The recirculation relay is faulty.

YES ↓

Set ACU switch to LOW. At the recirculation relay, connect a test lamp between earth and the orange/light green cable. Connect the blue/pink flying lead from the relay to earth.
Is the test lamp lit?

YES → The recirculation relay and the voltage supply to it are satisfactory.

NO ↓

Connect the test lamp between earth and the brown/pink cable at the relay.
Is the lamp lit?

NO → Referring to the actuator wiring diagram, test for 12 volts on the brown/pink cable at the ACU switch (in the LOW position) and the fan switch-off relay.

YES ↓

The recirculation relay is faulty.

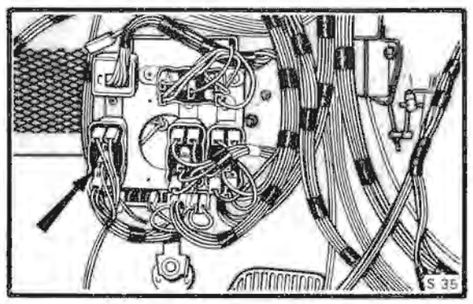

Recirculation relay left-hand drive cars

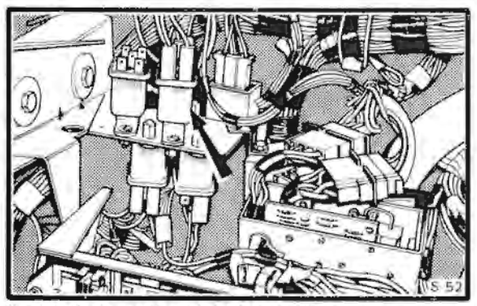

Recirculation relay right-hand drive cars

These are landmarks. They show which part of the system has been proved correct.

Note

If the actuators continue running, the diode between the orange/brown and orange/slate cable or between the orange/light green and orange/green cable is short circuit.

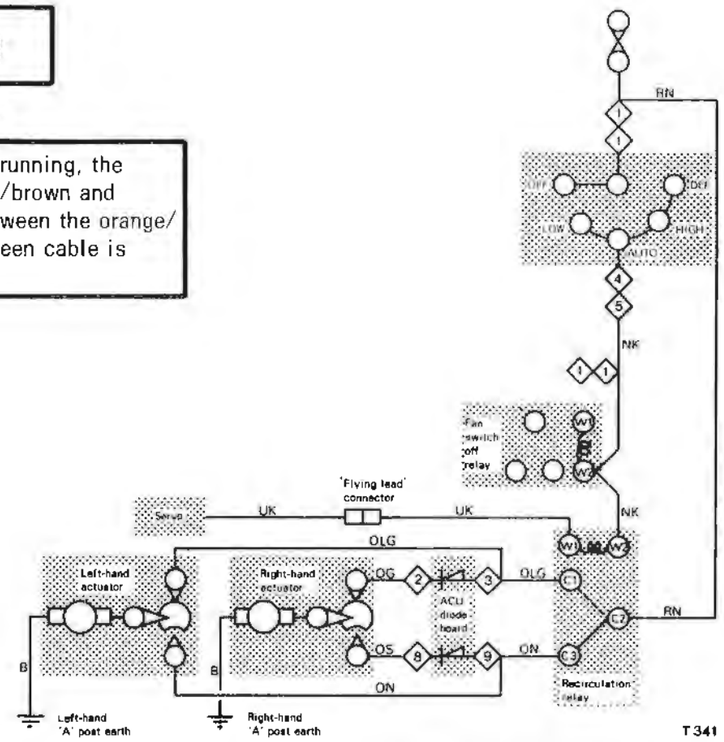

Have the actuators moved from the 'Recirculation' to the 'Fresh' position?

NO → Check the continuity of the orange/light green cable between the relay and diode block.

YES ↓

Remove the earth link from the blue/pink 'flying lead' but do not connect the leads.
Have the actuators moved to the 'Recirculation' position?

YES → The recirculation circuit is satisfactory. The fault is probably in the servo, refer to servo fault diagnosis.

NO ↓

Check the continuity of the orange/brown cable between the relay and the diode block.

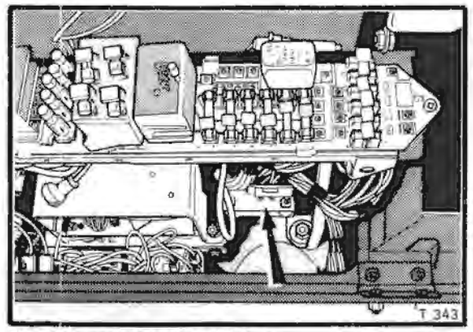

Diode board right-hand drive cars

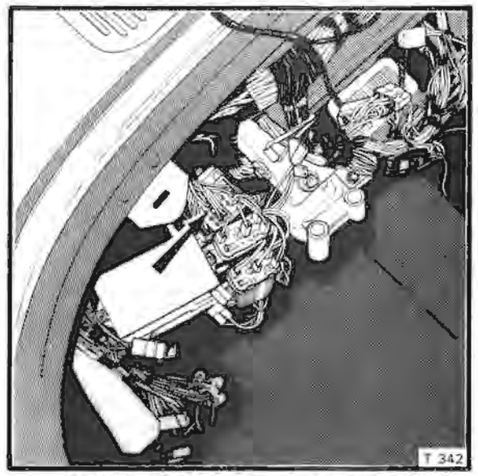

Diode board left-hand drive cars viewed with top roll removed

T.S.D. 4200 December 1979

Section C7

System test and fault diagnosis

Lower quantity flap inoperative
Sheet 1 of 2
Fig. C48

Printed in England

© Rolls-Royce Motors Limited 1978

September 1978
T.S.D. 4200

Printed in England

© Rolls-Royce Motors Limited 1978

September 1978

T.S.D. 4200

Start

Switch on the engine. Set the ACU switch to DEFROST. At the lower quantity flap actuator, connect a 12 volt test lamp between the green/pink cable and earth.
Does the lamp light?

NO → Verify that the orange/blue cable at the ACU switch is live and also that the green/pink cable from the diode block is live. If the green/pink is not live, the diode is faulty.

YES ↓

Set the ACU switch to AUTO. Remove the sensor chain socket (servo moves to screen mode). Disconnect the fan delay thermostat.
Is the test lamp extinguished?

NO → At the lower quantity relay, connect a test lamp between the blue/black cable and earth.
Does the lamp light?

NO → An incorrect live feed to the actuator is being supplied from the orange/black cable at ACU switch or the green/pink cable at upper servo plug. Replace the appropriate faulty component. (ACU switch or servo).

YES ↓

Remove the yellow/brown cable from the lower quantity relay. If the test lamp at the relay is extinguished there is an earth fault on the yellow/brown cable between relay and fan delay thermostat. If the test lamp remains lit, the lower quantity relay is faulty.

YES ↓

After the previous instruction, did the actuator operate?

NO → **Is there a live feed on the orange/white cable at the actuator?**

NO → **Go to sheet 2**

YES ↓

Set the ACU switch to DEFROST.
Does the actuator operate?

NO → Connect an external earth cable between the black cable at the actuator and a good earth. If the actuator does not move it is faulty.

YES ↓

The actuator is satisfactory.

During instructions 2 and 3, did the lower quantity flap fully open and fully close & did the microswitch operate?

YES → **The flap and actuator are satisfactory.**

NO ↓

Adjust the flap and tighten the pinch-bolt so that the flap will fully open and fully close. Ensure that the microswitch operates correctly.

These are landmarks. They show which part of the system has been proved correct.

Reconnect the sensor chain socket & connect the yellow/white cable to earth. (Servo moves to 'Facia' mode). Switch to AUTO.
Does the test lamp light?

YES → 2 faults or incorrect diagnosis.

NO → 15% microswitch on upper servo faulty, check for live feed on green/pink cable at servo plug.

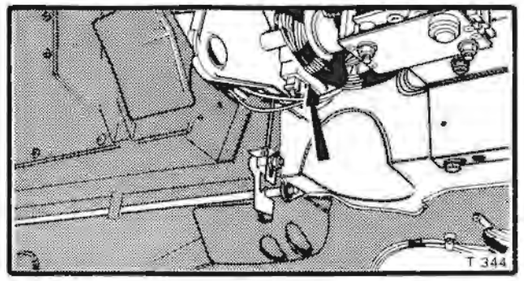

Lower quantity flap actuator right-hand drive cars.

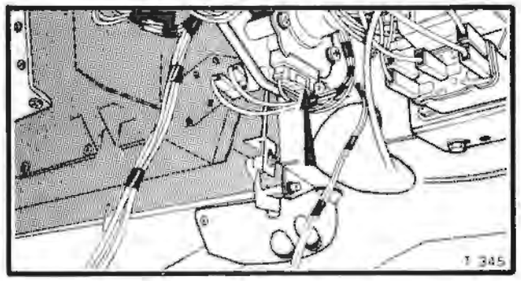

Lower quantity flap actuator left-hand drive cars.

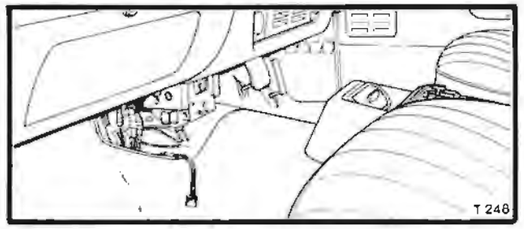

Location of sensor chain socket.

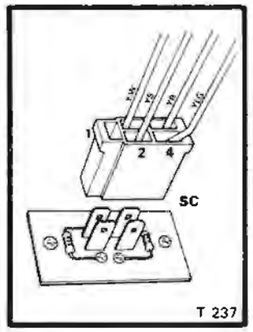

Sensor chain socket.

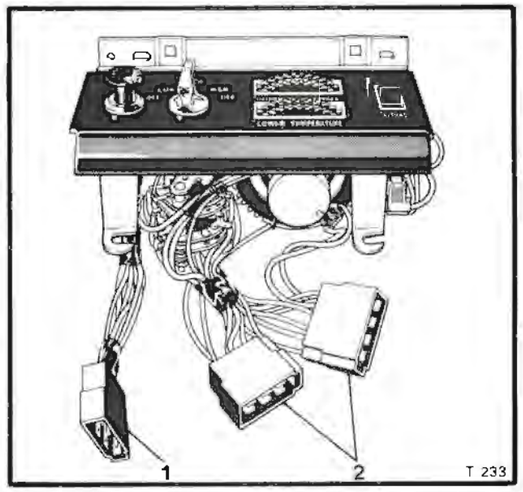

1. Hazard switch socket
2. A.C.U. sockets

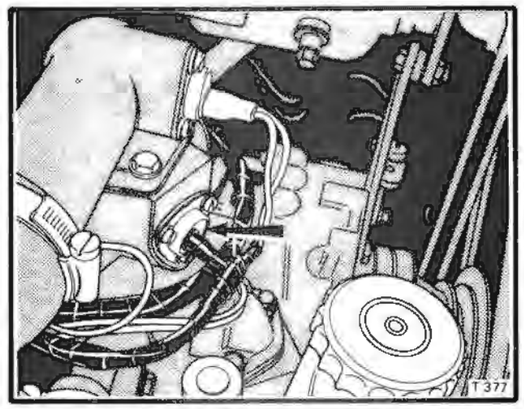

Fan delay thermostat.

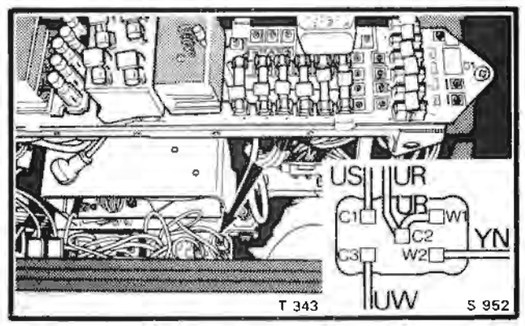

Lower quantity relay.

Section C7

System test and fault diagnosis

Lower quantity flap inoperative
Sheet 2 of 2
Fig. C48 continued

Printed in England
© Rolls-Royce Motors Limited 1978
September 1978
T.S.D. 4200

Printed in England
© Rolls-Royce Motors Limited 1978
September 1978
T.S.D. 4200

From sheet 1

Connect a test lamp between the blue/red cable at lower quantity relay and earth.
Does the lamp light?

NO → At the upper servo plug, connect a test lamp between the blue/green cable and earth.
Does the lamp light?

NO → Servo is probably faulty. Refer to Servo Fault Diagnosis.

YES → Open circuit in blue/green cable between servo and ACU switch, open circuit in blue/red cable between ACU switch & lower quantity relay or ACU switch faulty. Test for live feed using test lamp.

YES → Connect the test lamp between the blue/white cable at the lower quantity relay & earth.
Does the lamp light?

NO → Lower quantity relay faulty.

YES → At the diode block, connect a test lamp between the blue/white cable and earth.
Does the lamp light?

YES → Faulty diode between blue/white and orange/white cables, replace diode block.

NO → Open circuit in blue/white cable between relay and diode block.

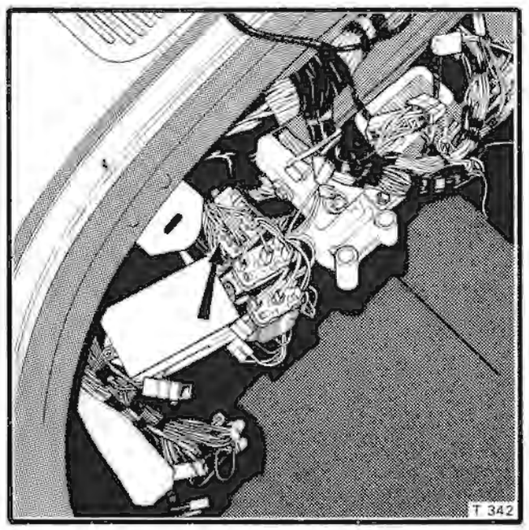

Diode board, left-hand drive cars, viewed with top roll removed.

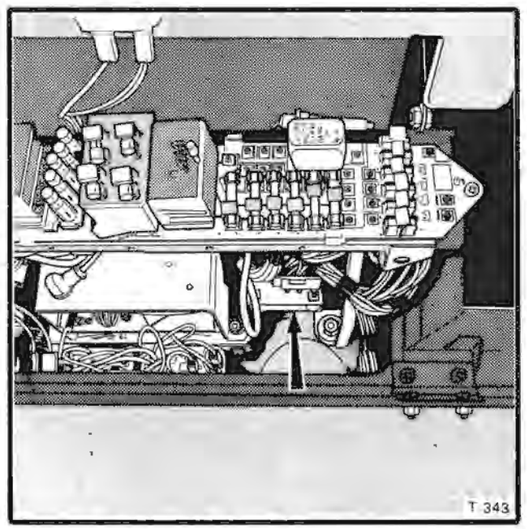

Diode board, right-hand drive cars.

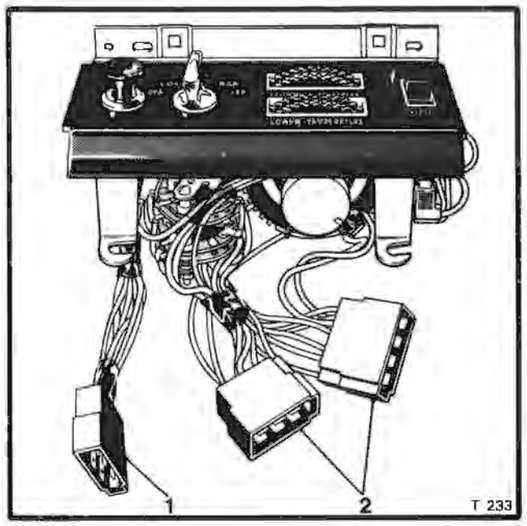

1. Hazard switch socket
2. A.C.U. sockets

Printed in England
© Rolls-Royce Motors Limited 1978
September 1978
T.S.D. 4200

Section C7

System test and fault diagnosis

ACU switch wiring diagram and testing

Fig. C49

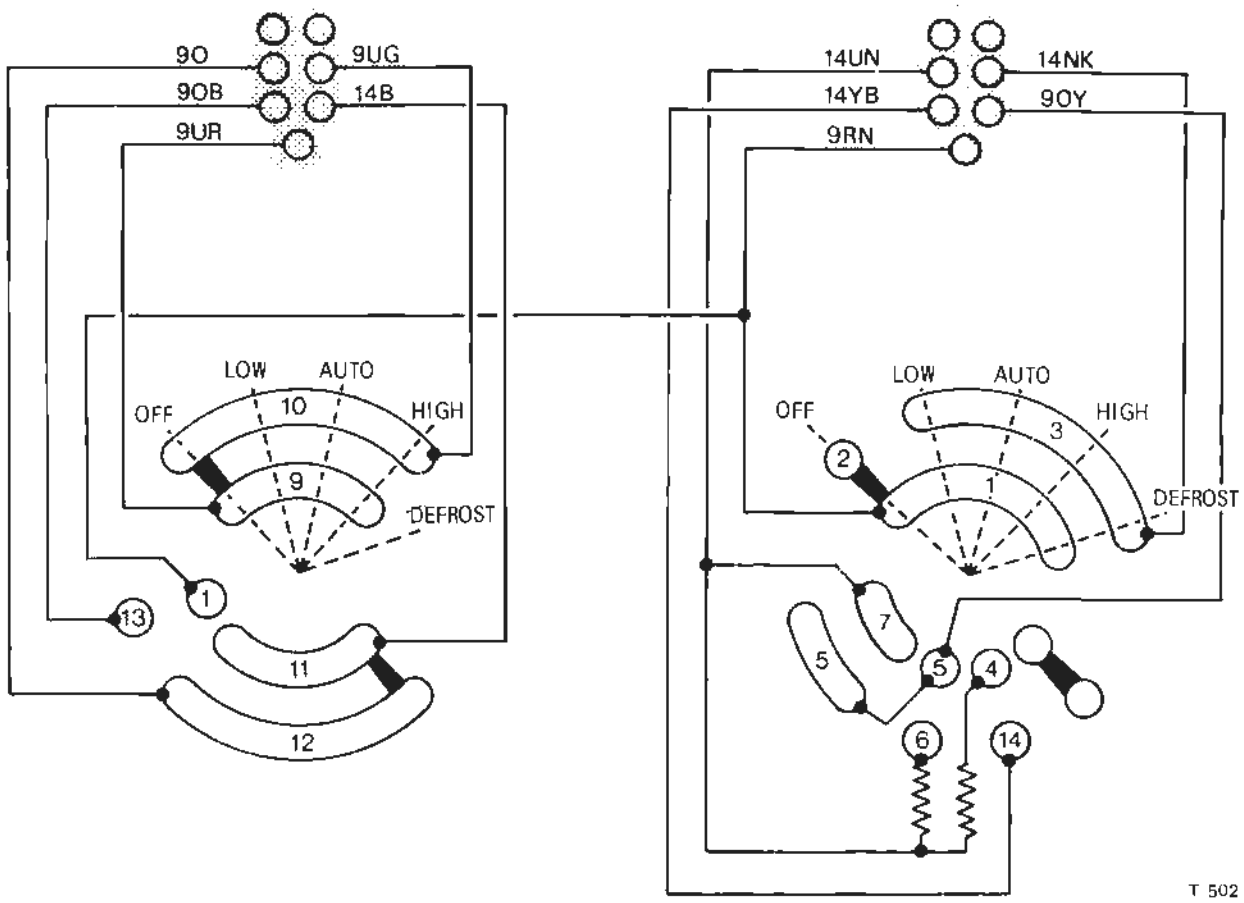

Resistance meter connection:

	Blue/green & blue/red	Orange/black & red/brown	Black & orange	Red/brown & brown/pink	Yellow/black & blue/brown	Orange/yellow & blue/brown
OFF	Short circuit	Open circuit	Short circuit	Open circuit	Open circuit	Open circuit
LOW	Short circuit	Open circuit	Short circuit	Short circuit	36 K	Open circuit
AUTO	Short circuit	Open circuit	Short circuit	Short circuit	Open circuit	6.8 K
HIGH	Short circuit	Open circuit	Short circuit	Short circuit	Open circuit	Open circuit
DEF	Open circuit	Short circuit	Open circuit	Short circuit	Open circuit	Open circuit

Section C7

System test and fault diagnosis

Compressor thermal fuse fault diagnosis Fig. C50

This chart should be used to locate the cause of a thermal fuse blowing in the compressor protection unit.

Printed in England
© Rolls-Royce Motors Limited 1978
T.S.D. 4200 September 1978

The air temperature surrounding the car must be above 24 °C before this diagnosis can be carried out.

Run the engine at approximately 2000 r.p.m.

At the thermal fuse, connect the blue cable to the blue/yellow cable.

Set the ACU switch to HIGH.

Check the sight glass of the receiver/drier, is it foamy or clear?

FOAMY → Low refrigerant charge (leak in system)

If a leak is not evident, check for restriction in the line between the drier and compressor.

CLEAR → Is the evaporator outlet pipe warm or cold?

WARM → Disconnect the yellow/green cable at each fan.

Check the evaporation pressure.

- **Vacuum** → System discharged
- **Below 26 psi** → Stop engine and allow time for both gauges to stabilise to within 10 psi

  Restart engine and check pressure
  - **Below 26 psi** → Replace expansion valve
  - **27 - 33 psi** → Moisture in system, replace drier
- **27 - 33 psi** → Replace expansion valve
- **Over 33 psi** → Suction throttling valve faulty

COLD → Disconnect the yellow/green cable at each fan

Check the evaporation pressure

Below 26 psi → Stop engine and allow time for both gauges to stabilise to within 10 psi

Restart engine and check pressure

- **Below 26 psi** → Suction throttling valve faulty
- **27 - 33 psi** → Moisture in system, replace drier

27 - 33 psi → Check wiring at thermal fuse

Test the superheat switch as follows:

a. Connect a 12 volt test lamp between the purple cable and blue/yellow cable.
b. Reconnect the yellow/green cable at fans.
c. Run engine at idle speed for 10 minutes with ACU at HIGH.
d. Set the ACU switch to LOW and increase engine speed to 2000 r.p.m.
e. If the lamp comes on for more than 15 seconds, the superheat switch is faulty.

© Rolls-Royce Motors Limited 1978

Printed in England

T.S.D. 4200 September 1978

Section C7

System test and fault diagnosis

Voltage stabiliser
Sheet 1 of 2
Fig. C51

Printed in England
© Rolls-Royce Motors Limited 1978

September 1978
T.S.D. 4200

Start

Have you checked the battery voltage?

Ensure that the battery voltage is at least 12 volts.
Disconnect the oil pressure switch. Set the A.C.U. to Auto. Measure the voltage on the 9K wire at the voltage stabiliser plug.
Is it at least 12 volts?

NO → **Go to sheet 2**

YES ↓

Measure the voltage on the 9KR wire at the voltage stabiliser plug.
Is it between 8.6 & 9.6 volts?

YES → Measure the voltage on the 9KR wire at the upper servo plug.
Is it between 8.6 & 9.6 volts?

NO → Fault on 9KR cable between stabiliser plug & servo plug.

YES ↓

Refer to Servo fault diagnosis.

NO ↓

Is the voltage less than 8.6 volts?

NO → Check the 44B cable between the voltage stabiliser plug and left-hand 'A' post earth.
Are the cable & earth point satisfactory?

NO → Correct the earth fault.
Is the voltage on the 9KR wire between 8.6 & 9.6 volts?

YES → If a fault still exists, refer to Servo fault diagnosis.

YES ↓

Disconnect the plug containing the 9KR wire at the servo and the voltage stabiliser.
Is the voltage on the 9KR wire at the voltage stabiliser between 8.6 & 9.6 volts?

NO → Change the voltage stabiliser assembly.

YES ↓

There is an earth fault on the 9KR wire, correct the fault. If the voltage is still not between 8.6 & 9.6 volts, change the voltage stabiliser assembly.

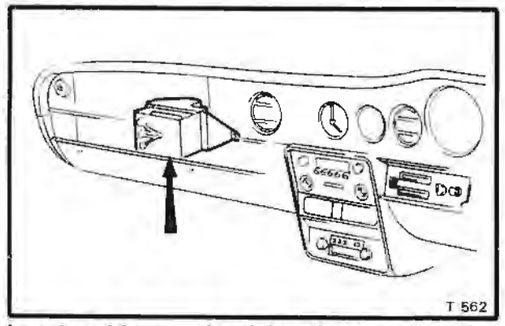

Location of fan speed module and voltage stabiliser right-hand drive cars

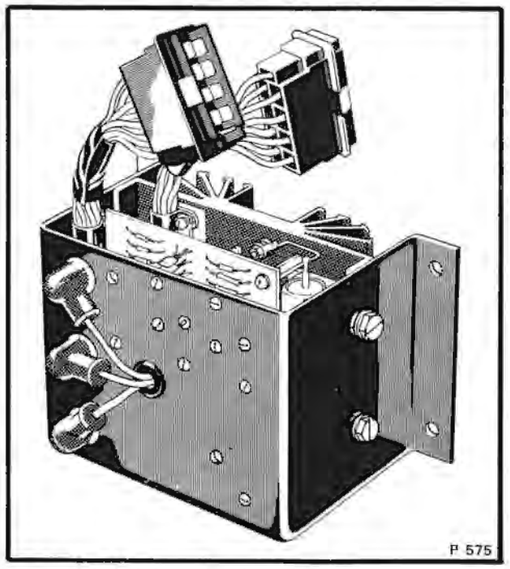

Fan speed module and voltage stabiliser

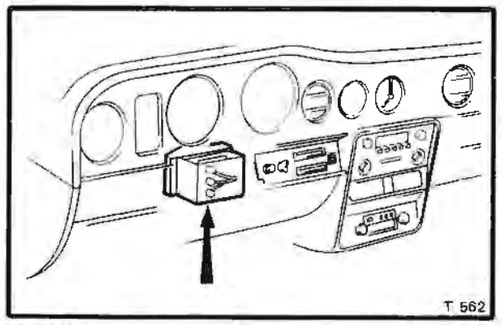

Location of fan speed module and voltage stabiliser left-hand drive cars

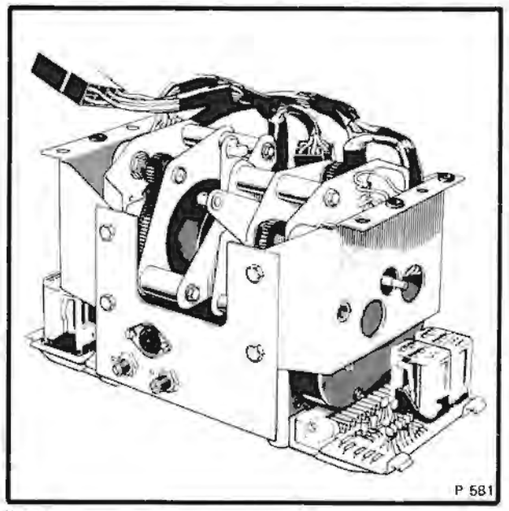

Servo assembly

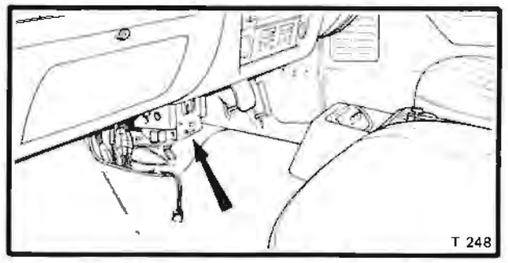

Location of servo assembly

Section C7

System test and fault diagnosis

Voltage stabiliser
Sheet 2 of 2
Fig. C51 continued

Printed in England
© Rolls-Royce Motors Limited 1978
T.S.D. 4000 September 1978

Have you checked the battery voltage?

From page 1

Measure the voltage on the pink wire at the servo isolation relay.
Is it at least 12 volts?

YES → Check the continuity of the pink wire between the servo isolation relay & voltage stabiliser assembly.

NO ↓

Test for 12 volts on the yellow/black cable at the servo isolation relay.
Is 12 volts available?

NO → Test for 12 volts on the yellow/black cable at the fans compressor relay.
Is 12 volts available?

YES → Check interconnecting cables and connections between servo isolation relay and fan & compressor relay.

NO ↓

Refer to 'Fans inoperative in all situations' chart.

YES ↓

Is there 12 volts at the spare contact (C1) of the servo isolation relay?

NO → Relay faulty.

YES ↓

The servo isolation relay is energised which is incorrect. Disconnect the white/brown cable at the relay.
Is there 12 volts on the pink cable?

NO → Relay faulty.

YES ↓

Check the white/brown cable between the servo isolation relay and oil pressure switch for earth fault.

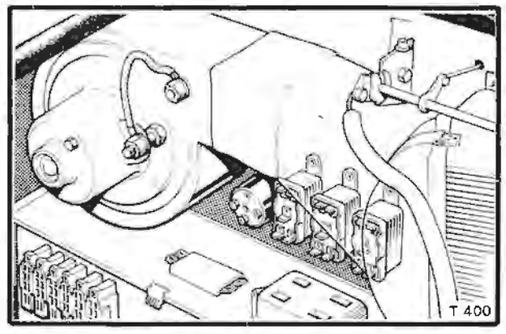

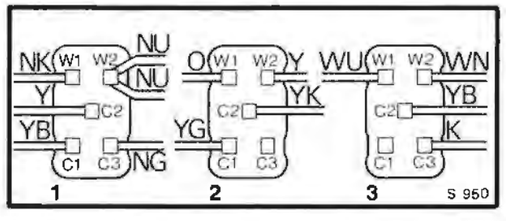

1. Fan and compressor relay
2. Fan delay relay
3. Servo isolation relay

Printed in England
© Rolls-Royce Motors Limited 1978

T.S.D. 4200 September 1978

Section C7

System test and fault diagnosis

Upper servo test and calibration procedure
Sheet 1 of 2
Fig. C52

Printed in England
© Rolls-Royce Motors Limited 1978

December 1978
T.S.D. 4200

Ensure that the battery is fully charged

Start

Disconnect the white/brown cable from the oil pressure switch. Disconnect the sensor chain socket and connect the test box into the socket. On the test box set the following:
IND/VOLTS to VOLTS — RUN/SET to RUN
AUTO/CAL to CAL. — UPPER/LOWER SERVO to UPPER
CHECK VOLTS to Position 1.
On the car, set the upper temperature selector to the mid-position, the A.C.U. switch to LOW and switch on the ignition.
Is a voltage reading between 8 and 10 volts shown on the test box?

NO → Refer to VOLTAGE STABILISER FLOW CHART.

YES

The voltage supply to the servo is satisfactory.

On the test box, set IND/VOLTS to IND and 0%/100% to 0%. Adjust ZERO control until meter reads 0%. Set 0%/100% to 100%. Adjust MAX control until meter reads 100%.
Can both readings be obtained?

YES → The test box is now calibrated and the lower servo operates.

NO → If upper servo does not move and calibration cannot be achieved, refer to SERVO FAULT DIAGNOSIS FLOW CHARTS.

*

On the test box, set the 0%/100% switch to 0% and wait for servo to stop at 0%. Switch the RUN/SET switch to SET.
Does the servo run from 0% and stop at a servo position reading of 51% ± 2%?

YES

NO → Turn the upper servo trim potentiometer anti-clockwise to a meter reading of 0%. Turn the upper servo trim potentiometer clockwise until a meter reading of 51% ± 2% is obtained.
This setting MUST be approached from the 0% position.

The upper servo is now correctly calibrated.

Go to sheet 2

These are landmarks. They show which part of the system has been proved correct.

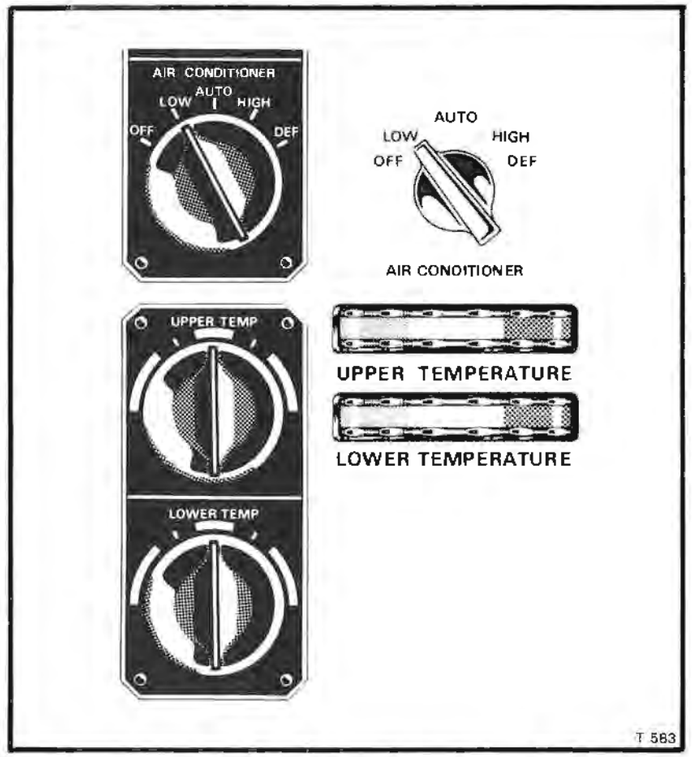

ACU Switch settings

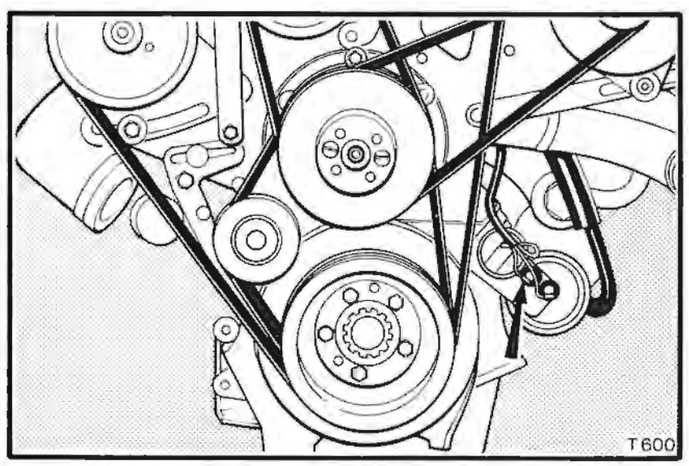

Oil pressure switch

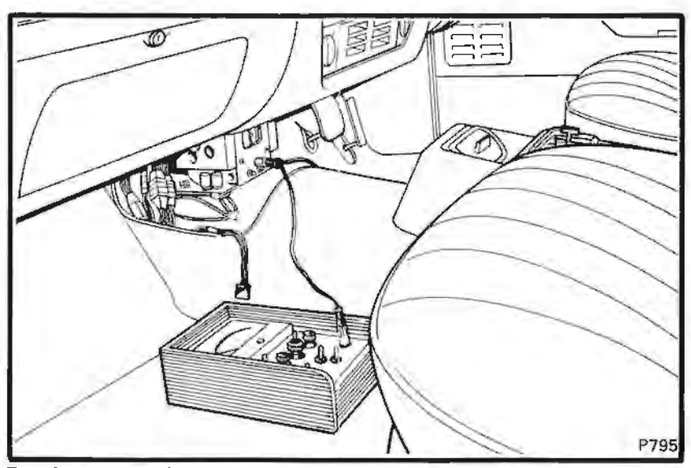

Test box connection

Section C7

System test and fault diagnosis

Upper servo test and calibration procedure
Sheet 2 of 2
Fig. C52 continued

Printed in England
© Rolls-Royce Motors Limited 1982
T.S.D. 4200 September 1982

From sheet 1

On the test box, set IND/VOLTS to VOLTS and CHECK VOLTS to Position 4. Record the voltmeter reading.
Is it between 1.7 and 3.3 volts?

NO → Internal fault in servo. Renew servo and repeat the complete test procedure for both upper and lower servos.

YES ↓

On the test box, set CHECK VOLTS to Position 5.
Is the voltmeter reading within ± 0.2 volts of the reading recorded in CHECK VOLTS Position 4?

YES → On the test box, set IND/VOLTS to IND, 0% to 100% switch to 100% and the RUN/SET switch to RUN. The upper servo should run from 51%±2% to 100%. At the upper servo arm, release the upper nut sufficiently to allow the temperature blend flap to be pulled through the servo arm until it stops under light pressure. Hold the rod under light pressure and adjust the lower nut to contact arm, then tighten nuts.

NO ↓

Interchange servo modules, set IND/VOLTS to VOLTS and repeat checks at CHECK VOLTS Position 4 and 5.
Are the readings within ± 0.2 volts?

NO → Lower servo module is also faulty. Renew both modules.

YES ↓

The original servo module is faulty. Renew servo module.

Go back to ✱ on sheet 1.

These are landmarks. They show which part of the system has been proved correct.

The upper temperature blend flap is now correctly set.

The upper servo and upper servo module are now proven to operate correctly from the test box.
If a fault still exists, refer to the UPPER SENSOR CHAIN FAULT DIAGNOSIS

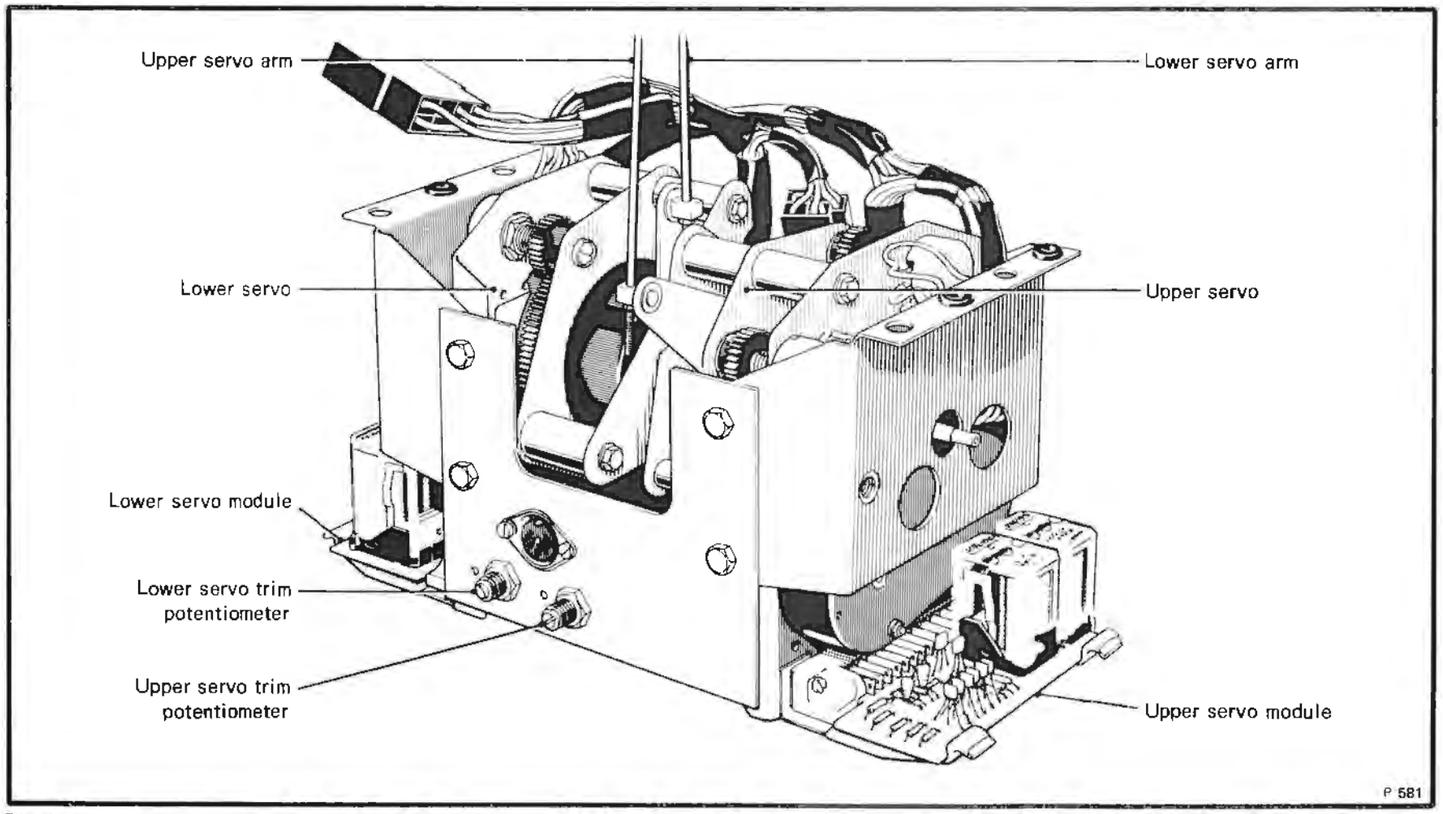

Servo assembly

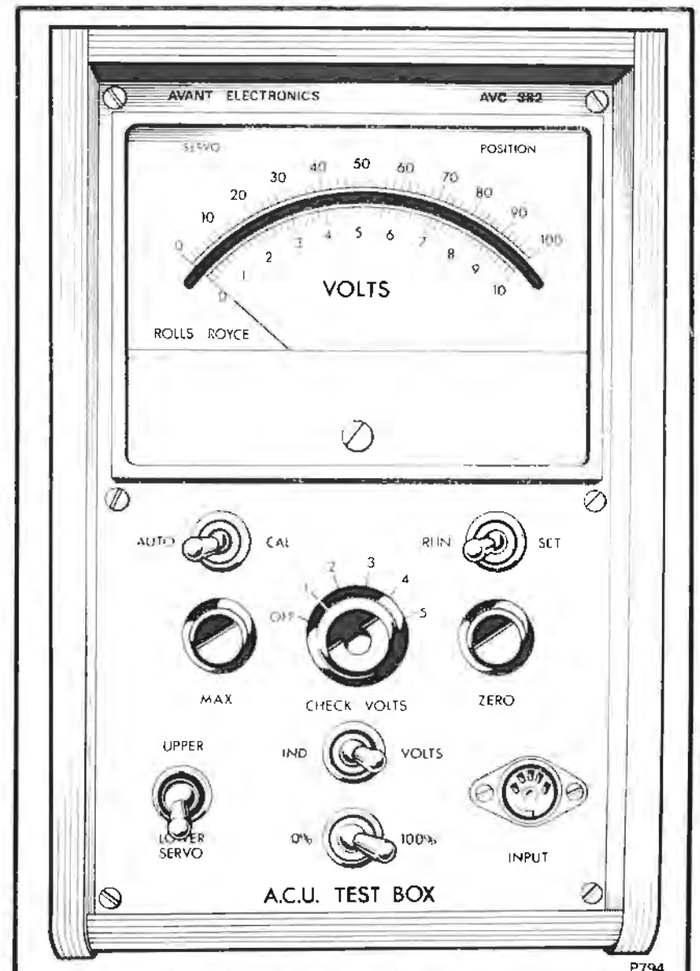

Printed in England
© Rolls-Royce Motors Limited 1982

Section C7

System test and fault diagnosis

Lower servo test and calibration procedure
Sheet 1 of 2
Fig. C53

Printed in England

© Rolls-Royce Motors Limited 1978

T.S.D. 4200 December 1978

Ensure that the battery is fully charged

Start

Disconnect the white/brown cable from the oil pressure switch. Disconnect the sensor chain socket and connect the test box into the socket. On the test box set the following:
IND/VOLTS to VOLTS. RUN/SET to RUN
AUTO/CAL to CAL. UPPER/LOWER SERVO to LOWER
CHECK VOLTS to Position 1.
On the car, set the lower temperature selector to the mid-position, the A.C.U. switch to LOW and switch on the ignition.
Is the voltage reading between 8 and 10 volts?

NO → Refer to VOLTAGE STABILISER FLOW CHART

YES ↓

The voltage supply to the servo is satisfactory.

On the test box, set IND/VOLTS to IND and 0%/100% to 0%. Adjust ZERO control until meter reads 0%. Set 0%/100% to 100% Adjust MAX control until meter reads 100%.
Can both readings be obtained?

YES → The test box is now calibrated and the upper servo operates.

NO ↓

If the lower servo does not move and calibration cannot be achieved, refer to SERVO FAULT DIAGNOSIS FLOW CHARTS.

The test box is now calibrated and the upper servo operates. *

On the test box, set the 0%/100% switch to 0% and wait for the servo to stop at 0%. Switch the RUN/SET switch to SET.
Does the servo run from 0% and stop at a servo position reading of 43% ± 2%?

YES ↓

NO ↓

Turn the lower servo trim potentiometer anti-clockwise to a meter reading of 0%. Turn the lower servo trim potentiometer clockwise until a meter reading of 43% ± 2% is obtained. **This setting MUST be approached from the 0% position.**

The lower servo is now correctly calibrated.

Go to sheet 2

These are landmarks. They show which part of the system has been proved correct.

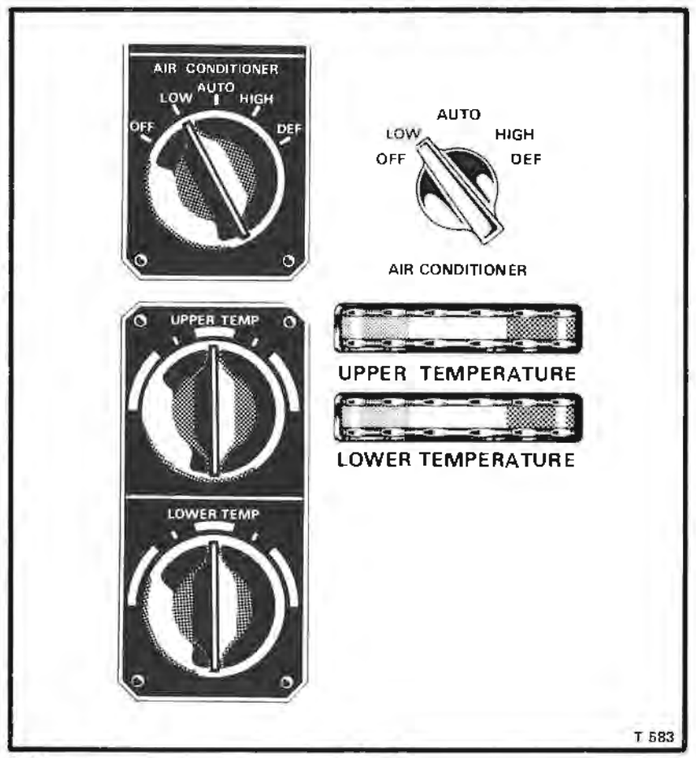

ACU switch settings

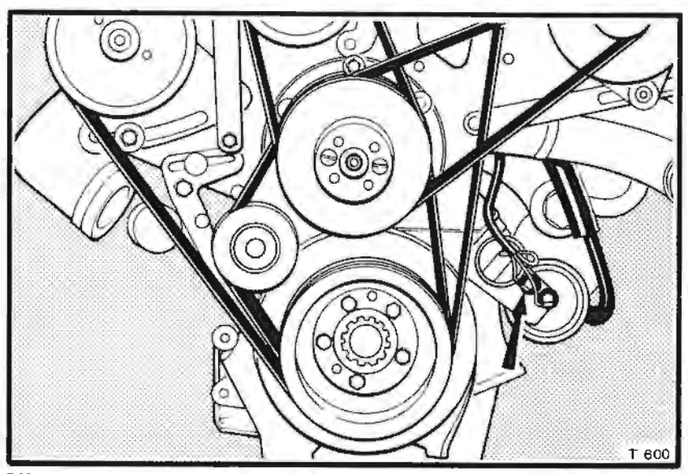

Oil pressure switch

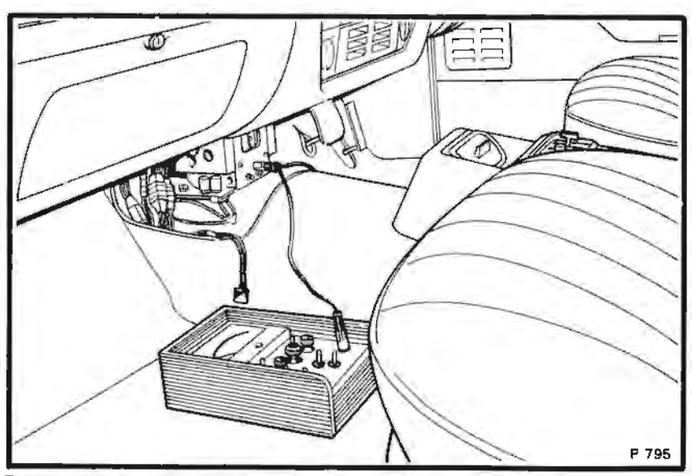

Test box connection

3 Printed in England

© Rolls-Royce Motors Limited 1984

T.S.D. 4200 March 1984

Section C7

System test and fault diagnosis

Lower servo test and calibration procedure
Sheet 2 of 2
Fig. C53 continued

From sheet 1

On the test box, set the IND/VOLTS to VOLTS and CHECK VOLTS to Position 2. Record the voltmeter reading.
Is it between 1.7 and 3.3 volts?

NO → Internal fault in servo. Renew servo and repeat the complete test procedure for both upper and lower servos.

YES ↓

On the test box, set CHECK VOLTS to Position 3.
Is the voltmeter reading within ± 0.2 volts of the reading recorded in CHECK VOLTS Position 2?

YES → On the test box, set the IND/VOLTS to IND and the RUN/SET switch to RUN. The lower servo should run from 43% ± 2% to 0%. At the lower servo arm, release the upper nut sufficiently to allow the temperature blend flap rod to be pulled through the servo arm until it stops under light pressure. Hold the rod under light pressure and adjust the lower nut to contact the servo arm, then tighten nuts.

NO ↓

Interchange servo modules and repeat checks at CHECK VOLTS Position 2 and 3.
Are the readings within ± 0.2 volts?

NO → Upper servo module is also faulty. Renew both modules.

YES ↓

The original servo module is faulty. Renew servo module.

Go back to ✱ on sheet 1

These are landmarks. They show which part of the system has been proved correct.

The lower temperature blend flap is now correctly set

The lower servo and lower servo module are now proven to operate correctly from the test box. If a fault still exists, refer to the LOWER SENSOR CHAIN FAULT DIAGNOSIS

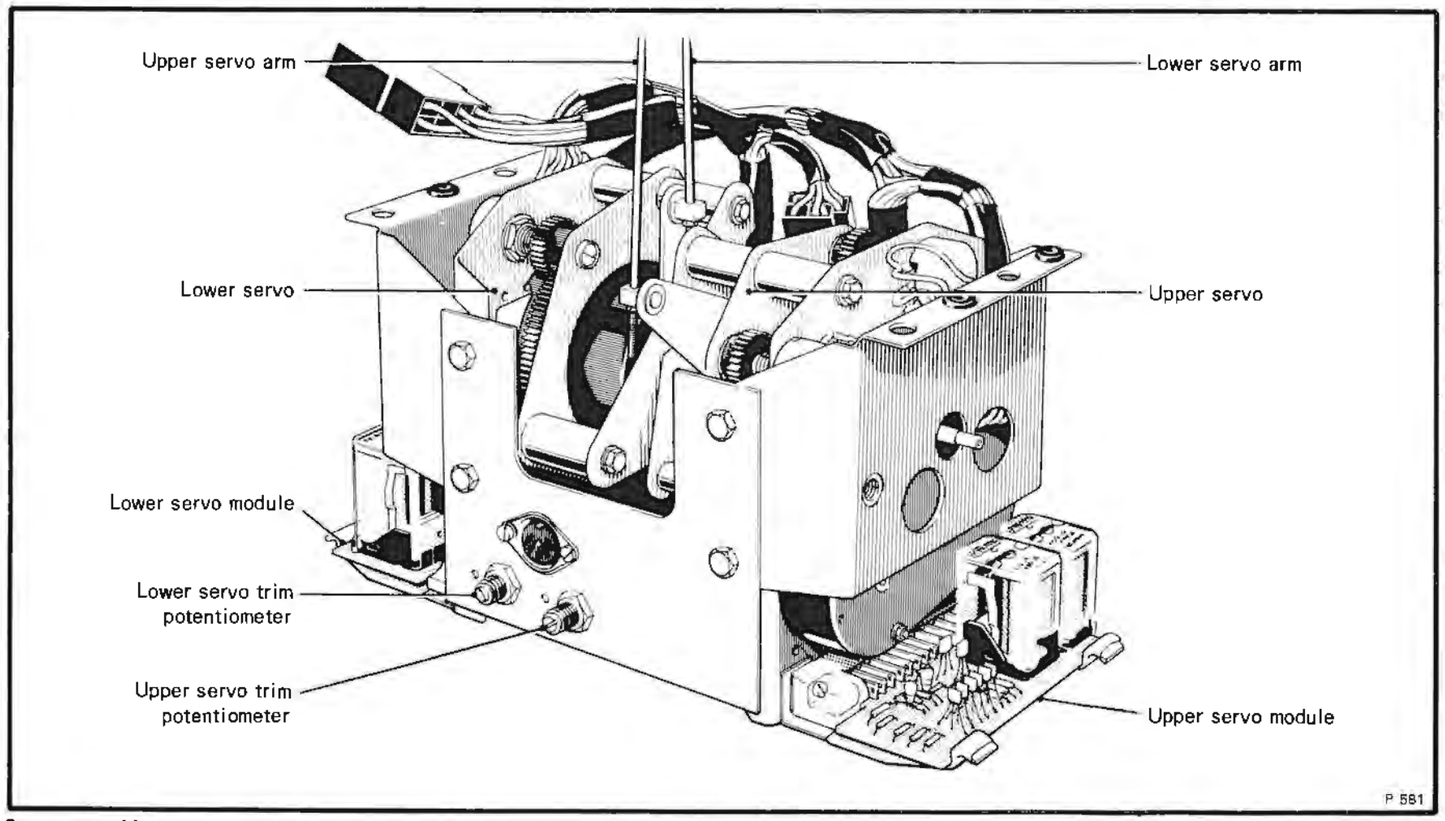

Servo assembly

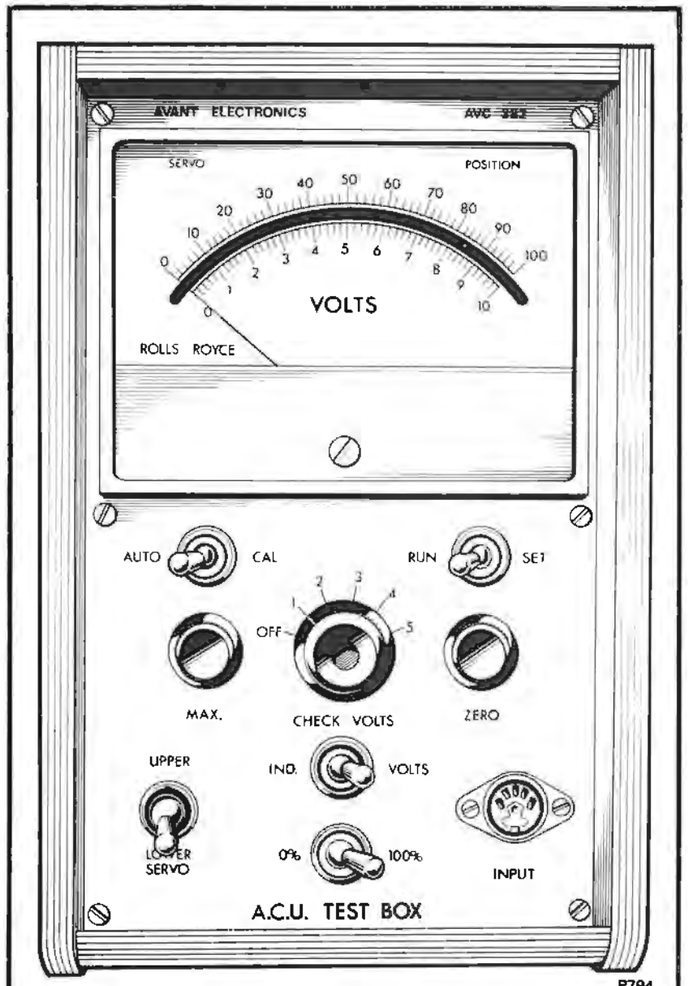

T.S.D. 4200 March 1984
© Rolls-Royce Motors Limited 1984
Printed in England

Section C7

System test and fault diagnosis

Test procedure for recirculation,
lower quantity, mode change,
fan inhibit and rear window demist circuits.
Sheet 1 of 7
Fig. C54

Printed in England
© Rolls-Royce Motors Limited 1978
T.S.D. 4200 December 1978

Start

Disconnect the white/brown cable from the oil pressure switch.
Disconnect the sensor chain socket.
Connect the test box into the servo test socket.

On the test box set the following:
IND/VOLTS to IND. RUN/SET to RUN.
AUTO/CAL to CAL. UPPER/LOWER SERVO to UPPER.
CHECK VOLTS to Position 1.

On the car, set the upper temperature switch to the mid-position and the ACU switch to LOW. Switch on the ignition.

On the test box, set the 0%/100% switch to 0% and adjust ZERO control until meter indicates 0%. Set the 0%/100% switch to 100% and adjust MAX control until meter indicates 100%. Repeat both operations until both readings are correct.

On the test box, set the RUN/SET switch to SET and the 0%/100% switch to 0%. Turn the upper servo trim potentiometer fully anti-clockwise and wait for the servo to stop. If the meter reading is not 0%, turn the upper temperature selector towards the minimum temperature position until 0% is obtained.

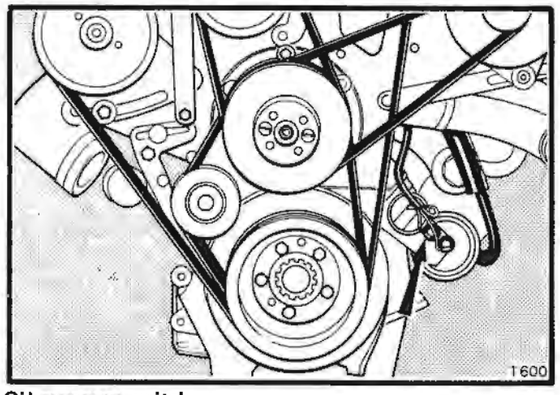

Oil pressure switch

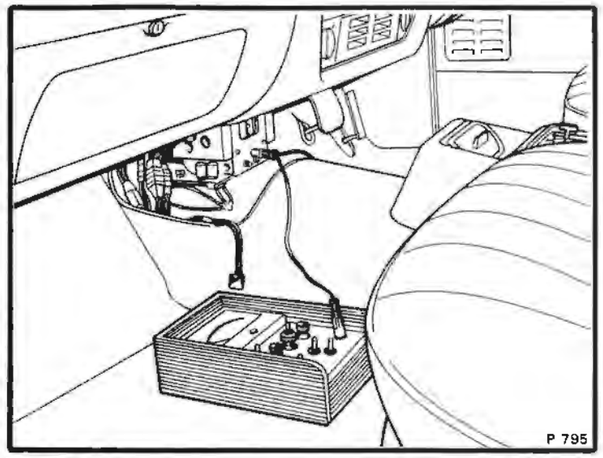

Test box connection

Checking the Recirculation Actuators → **Go to sheet 2**

Checking the Lower Quantity Actuator → **Go to sheet 3**

Checking the Mode Flap Actuator and Rear Window Demist → **Go to sheet 4**

Checking the Fans Inhibit Circuit. → **Go to sheet 6**

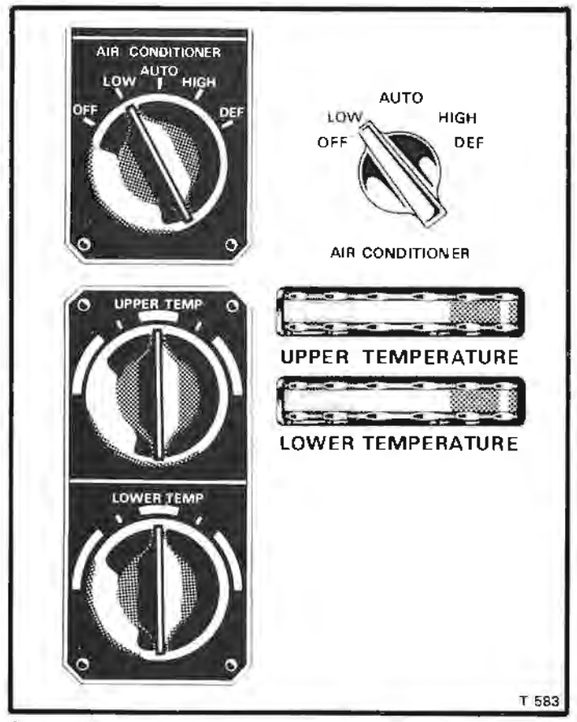

ACU switch settings

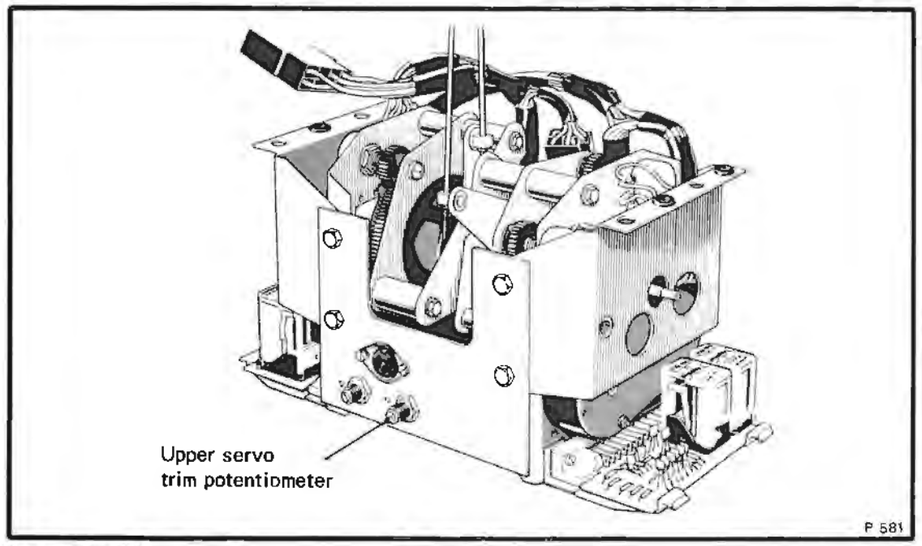

Servo assembly

Printed in England
© Rolls-Royce Motors Limited 1978
T.S.D. 4200 December 1978

Section C7

System test and fault diagnosis

Test procedure for recirculation, lower quantity, mode change, fan inhibit and rear window demist circuits.
Sheet 2 of 7
Fig. C54 continued

Printed in England
© Rolls-Royce Motors Limited 1978
T.S.D. 4200 December 1978

From sheet 1
Recirculation actuators

Those are landmarks. They show which part of the system has been proved correct.

Turn the upper servo trim potentiometer clockwise until the meter indicates approximately 5%.
Have both recirculation actuators moved to the 'Fresh Air' position?

NO → Refer to RECIRCULATION ACTUATOR FAULT FLOW CHART

YES

Turn the upper servo trim potentiometer anti-clockwise until meter indicates 0%.
Have both actuators moved to the 'Recirculation' position?

YES → The recirculation actuators are now satisfactory

NO → Refer to RECIRCULATION ACTUATOR FAULT FLOW CHART

Recalibrate the upper servo to 51% ± 2%

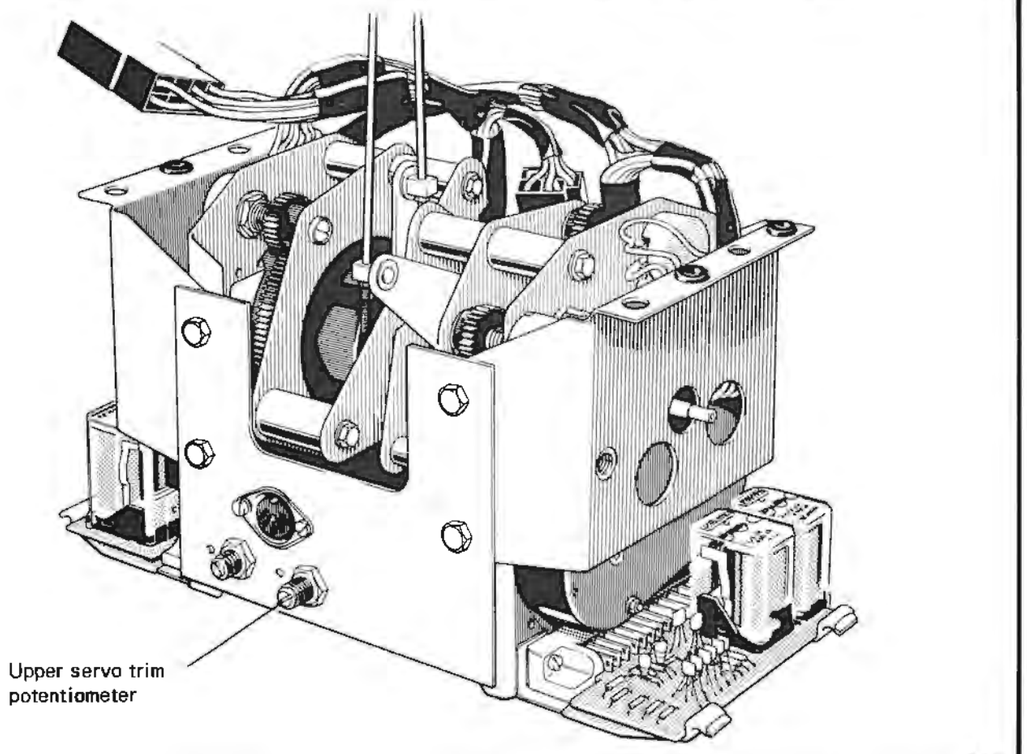

Servo assembly

Printed in England
© Rolls-Royce Motors Limited 1978
T.S.D. 4200 December 1978

Section C7

System test and fault diagnosis

Test procedure for recirculation,
lower quantity, mode change,
fan inhibit and rear window demist circuits.
Sheet 3 of 7
Fig. C54 continued

Printed in England

© Rolls-Royce Motors Limited 1978

T.S.D. 4200 December 1978

From sheet 1
Lower quantity actuator

Turn the upper servo trim potentiometer very slowly clockwise.
Does the lower quantity actuator operate and the flap open?

YES

NO

Refer to the LOWER QUANTITY ACTUATOR FAULT FLOW CHART

Does the meter indicate 10% ± 4%?

NO

Renew servo and set-up as in Servo Test and Calibration chart.

YES

Turn the upper servo trim potentiometer **anti-clockwise until** the lower quantity actuator operates.
Does the lower quantity flap close?

NO

Refer to LOWER QUANTITY ACTUATOR FAULT FLOW CHART

YES

These are landmarks. They show which part of the system has been proved correct

The lower quantity flap and actuator are now correct

Recalibrate the upper servo to 51% ± 2%

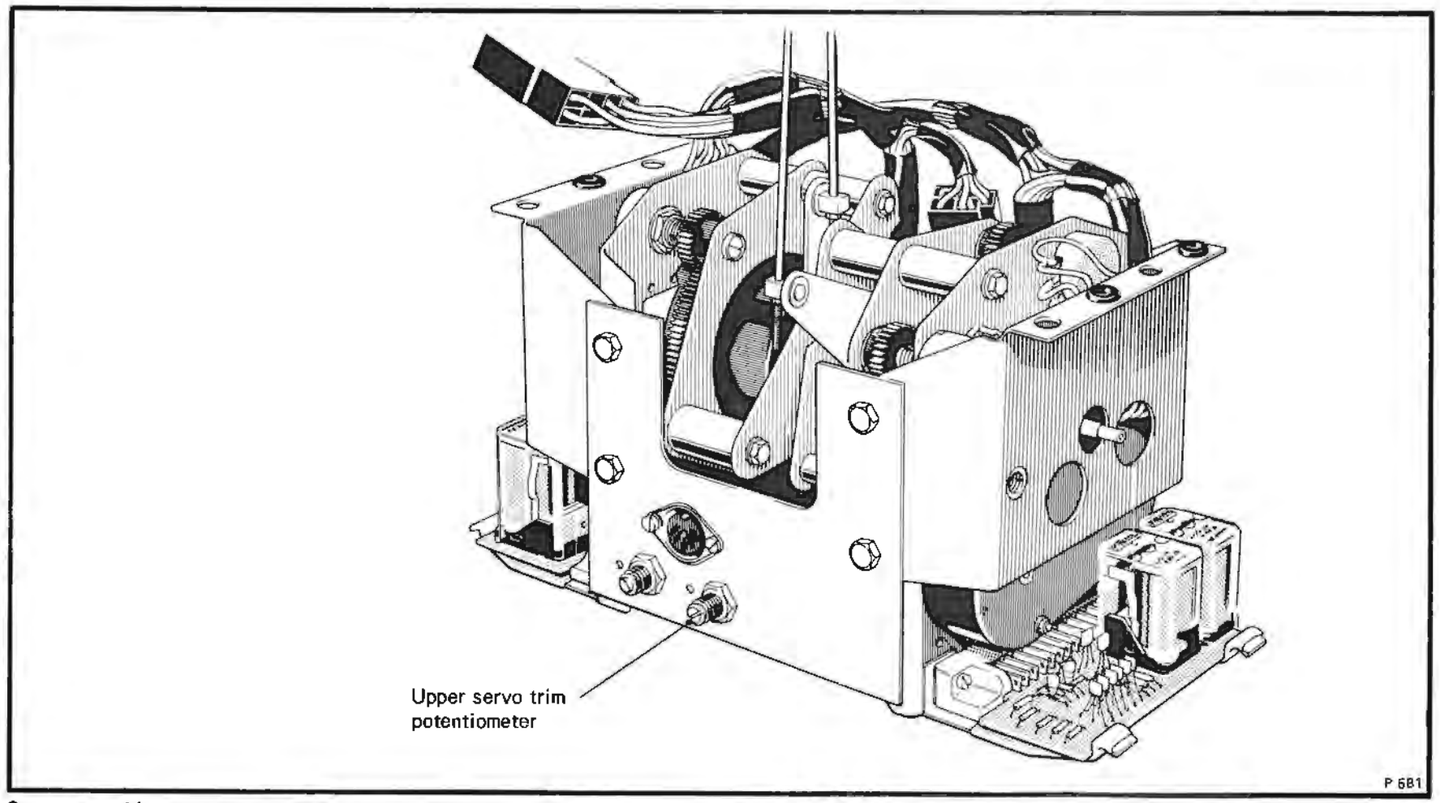

Servo assembly

Printed in England
© Rolls-Royce Motors Limited 1978
T.S.D. 4200 December 1978

Section C7

System test and fault diagnosis

Test procedure for recirculation,
lower quantity, mode change,
fan inhibit and rear window demist circuits.
Sheet 4 of 7
Fig. C54 continued

Printed in England
© Rolls-Royce Motors Limited 1978
December 1978
T.S.D. 4200

From sheet 1

Turn the upper servo trim potentiometer slowly clockwise.
Does the mode flap actuator operate and is the mode flap in the 'Screen' position?

NO → Refer to MODE FLAP and ACTUATOR FAULT DIAGNOSIS

YES

Does the meter indicate 25% ±4%?

NO → Renew servo and set-up as in Servo test and calibration chart.

YES

Turn the upper servo trim potentiometer anti-clockwise.
Does the mode flap actuator operate and is the mode flap in the 'Facia' position?

NO → Refer to MODE FLAP and ACTUATOR FAULT DIAGNOSIS

YES

The mode flap actuator is satisfactory.

Turn the upper servo trim potentiometer slowly clockwise until the mode flap operates into the 'Screen' mode. With the engine running, disconnect the blue/slate wire from terminal C2 of the rear window demist relay and connect a suitable ammeter between the blue/slate wire and terminal C2.
Does the ammeter indicate between 8.5 and 13.5 amps?

NO → **Go to sheet 5**

YES

The rear window demister is satisfactory.

Recalibrate the upper servo to 51% 2%.

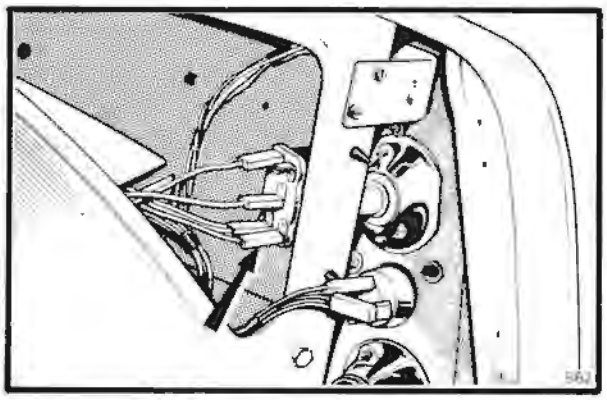

Window demist relay

These are landmarks. They show which part of the system has been proved correct.

Section C7

System test and fault diagnosis

Test procedure for recirculation,
lower quantity, mode change,
fan inhibit and rear window demist circuits.
Sheet 5 of 7
Fig. C54 continued

Printed in England

© Rolls-Royce Motors Limited 1978

T.S.D. 4200 December 1978

From sheet 4

Is there 12 volts on the blue/slate wire at the rear window demist relay?

YES

Is there 12 volts on the blue/slate wire at the rear window demist connections? (Right-hand side)

NO

Open circuit in blue/slate wire between relay and rear window demister. Check the soundness of the rear window demist plug and socket.

YES

Disconnect the black wire from the blue wire at the rear window demist panel and connect a test lamp between the blue/slate wire (right-hand side) to the black wire on the left-hand side.
Does the lamp light?

NO

Open circuit in black wire between demister and earth or faulty left-hand boot earth.

YES

The rear window demister is faulty. Replace demister panel.

Rear window demister should now operate correctly.

Recalibrate the upper servo to 51% ± 2%.

NO

Is there 12 volts on the brown/slate wire at the rear window demist relay?

YES

NO

Check fuse 8 and the continuity of the brown/slate wire from fuse 8 to the rear window demist relay.

Is there 12 volts on the orange/blue wire at the relay?

YES

NO

Check the continuity of the orange/blue wire between the relay and servo plug and socket. Ensure that the right-hand body socket is sound.

Check the black wire from W2 of the relay to earth. The wire is connected to the stoplamp failure relay and from there to the right-hand boot earth. If the wire and earth point are sound, the relay is faulty.

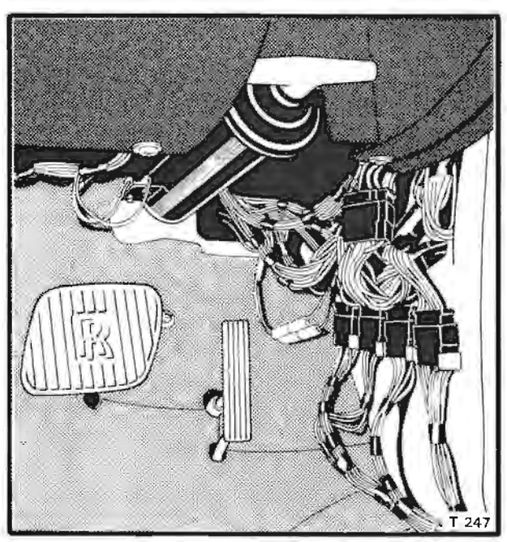

Right-hand body sockets

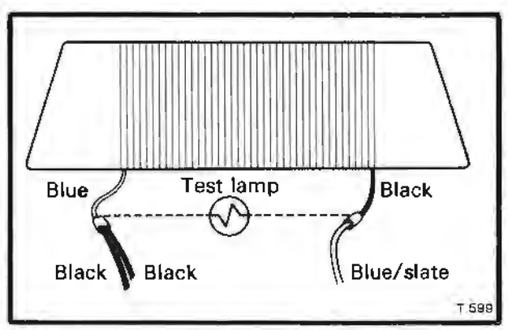

Rear window demist

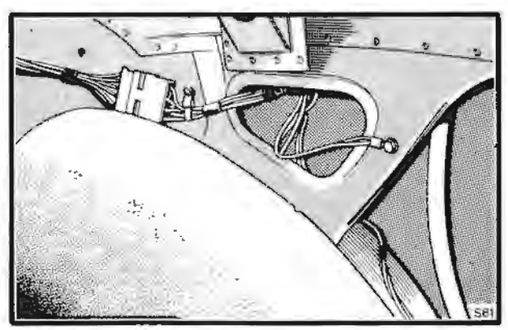

Rear window demist socket & Right-hand boot earth

These are landmarks. They show which part of the system has been proved correct

© Rolls-Royce Motors Limited 1978

Printed in England

Section C7

System test and fault diagnosis

Test procedure for recirculation,
lower quantity, mode change,
fan inhibit and rear window demist circuits.
Sheet 6 of 7
Fig. C54 continued

Printed in England

© Rolls-Royce Motors Limited 1978

T.S.D. 4200 December 1978

From sheet 1
Fans inhibit circuit

Disconnect the fan delay thermostat.
Do the fans operate?
NO → Refer to FANS INOPERATIVE IN ALL SITUATIONS fault diagnosis.
YES ↓

Turn the upper servo trim potentiometer clockwise until the mode flap operate to the 'Screen' position.
Do the fans continue to operate?
NO → Refer to FANS INOPERATIVE IN LOW, AUTO and HIGH fault diagnosis.
YES ↓

Switch off the ignition and immediately restart the engine.
Are the fans inoperative for approximately 13 seconds?
YES → **Go to sheet 7**
NO ↓

At the fan speed module plug is there 12 volts on the brown/blue wire when the engine is cranking?
NO → Open circuit on brown/blue wire between fan speed module plug and starter motor. Correct the fault and restart the engine.
Are the fans inoperative for 13 seconds?
YES → **Go to sheet 7**
NO ↓
YES ↓

Check for an earth fault on the blue/black wire between the fan speed module and fan switch-off relay. Restart the engine.
Are the fans inoperative for 13 seconds?
YES → **Go to sheet 7**
NO ↓

At the fan speed module plug is there 12 volts on the orange/purple wire?
NO → Open circuit on orange/purple wire between fan speed module and servo. Correct the fault and restart the engine.
Are the fans inoperative for approximately 13 seconds?
YES → **Go to sheet 7**
NO ↓
YES ↓

Renew fan speed module. Restart the engine.
Are the fans inoperative for approximately 13 seconds?
YES → **Go to sheet 7**
NO ↓

Two faults or incorrect diagnosis

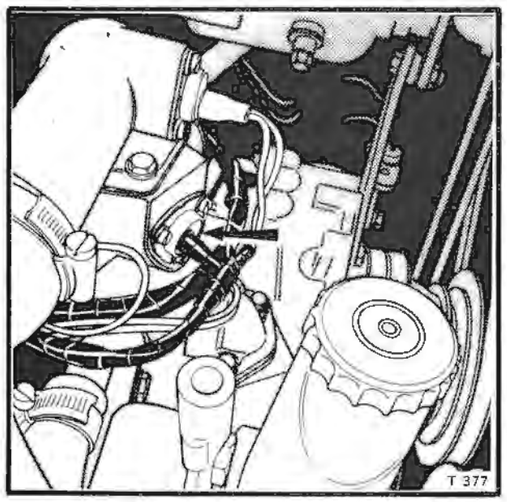

Fan delay thermostat

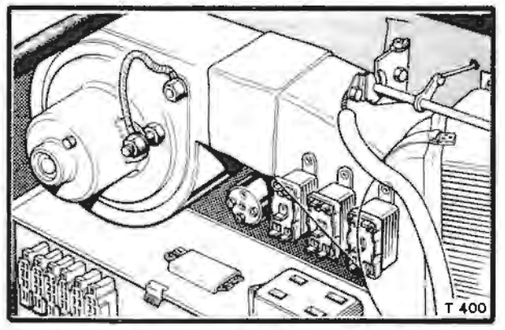

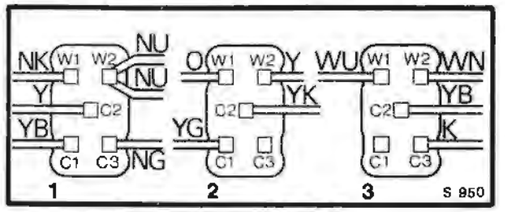

1. Fan and compressor relay
2. Fan delay relay
3. Servo isolation relay

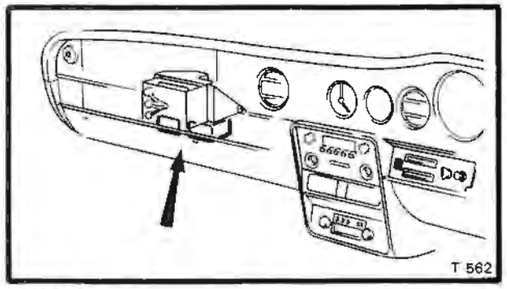

Location of fan switch-off relay and lower quantity relay right-hand drive cars

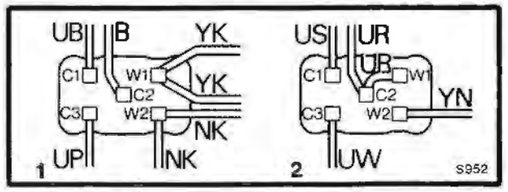

1. Fan switch-off relay
2. Lower quantity relay

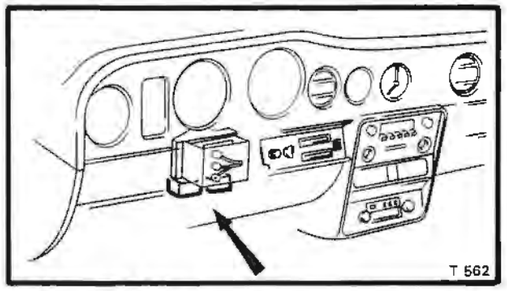

Location of fan switch-off relay and lower quantity relay left-hand drive cars

Section C7

System test and fault diagnosis

Test procedure for recirculation,
lower quantity, mode change,
fan inhibit and rear window demist circuits.
Sheet 7 of 7
Fig. C54 continued

Printed in England

© Rolls-Royce Motors Limited 1978

T.S.D. 4200 December 1978

From sheet 6

Short circuit the yellow/brown wire of the fan delay thermostat to earth.
Do the fans stop and has the lower quantity flap closed?

NO → Check the yellow/brown wire for continuity and also the fan delay relay and lower quantity micro-switch for correct operation.

YES

Disconnect the yellow/brown wire from earth.
Do the fans only restart when the lower quantity flap is fully open?

YES

NO

Refer to LOWER QUANTITY ACTUATOR FLOW CHART.

Turn the upper servo trim potentiometer anti-clockwise until the mode flap operates to the 'Facia' position.
Do the fans restart?

NO → Refer to FANS INOPERATIVE IN LOW, AUTO and HIGH fault diagnosis

YES

Switch off the ignition and immediately restart the engine.
Do the fans start immediately?
(i.e. no 13 second delay)

NO → Check the diodes between the orange/purple and orange/red wires and also between the orange/purple and yellow wires at the ACU diode board.

YES

The 13 second delay circuit is satisfactory

Pull gently downwards on the lower quantity flap microswitch operating rod.
Do the fans continue to operate?

YES

NO

Readjust microswitch setting
Do the fans operate?

YES → Remove the yellow/brown wire from earth and reconnect the fan delay thermostat. Turn the upper servo trim potentiometer clockwise until the mode flap operates to the 'Screen' position. Verify that the fans stop.

NO

Two or more faults or incorrect diagnosis

The fans inhibit circuit is satisfactory.

Recalibrate the upper servo to 51% ± 2%.

These are landmarks. They show which part of the system has been proved correct.

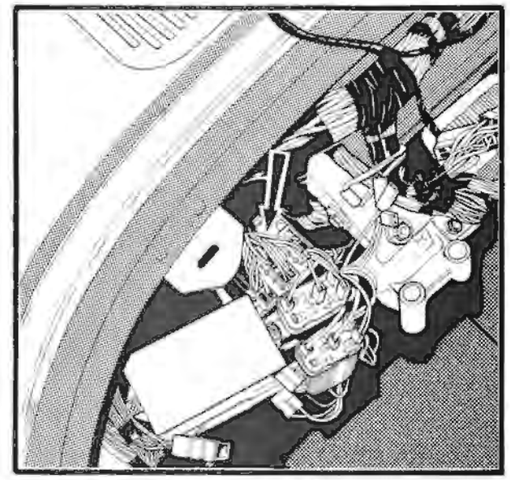

Diode board left-hand drive cars

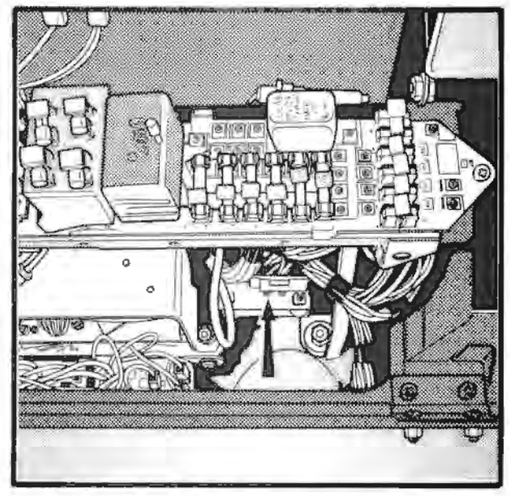

Diode board right-hand drive cars

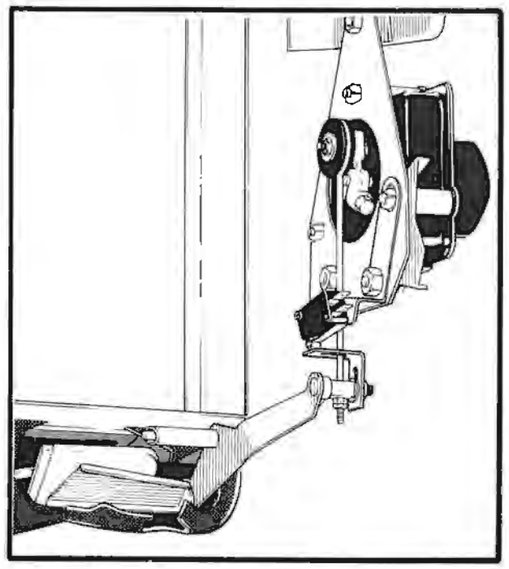

Lower quantity flap microswitch operating rod

Printed in England
© Rolls-Royce Motors Limited 1978

Section C8

Detailed circuit description and operation
Contents

	Page
Interlock and Inhibit circuit	C8 - 3
A.C.U. function switch	C8 - 4
Temperature selectors	C8 - 5
Servos	C8 - 5
Servo modules	C8 - 6
Recirculation actuators	C8 - 6
Lower quantity actuator	C8 - 8
Mode actuator	C8 - 9
Voltage stabiliser	C8 - 9
Fan speed module	C8 - 10

Printed in England
© Rolls-Royce Motors Limited 1978
December 1978
T.S.D. 4200

Section C8

Detailed circuit description and operation

Interlock and Inhibit circuits

Interlock circuit

The wiring diagram is shown in Figure C22.

Both the fan and compressor, and the servo circuits are fed from the fan and compressor fuse. The fan and compressor feeds are switched by the fan and compressor relay and the servo feed is taken from the fan and compressor feed but via the servo isolation relay. Therefore the fans and compressor are switched on when the fan and compressor relay is energised, and the servos are switched on when the fan and compressor relay is energised and the servo isolation relay is not energised. The yellow/black switched fan feeds are taken from C1 on the fan and compressor relay, through toeboard socket E and then directly to the fan speed module. A yellow/black switched feed is taken from C2 on the servo isolation relay to the compressor thermostat and then to the compressor clutch. The contacts on the compressor thermostat break when the ambient temperature falls below 0 °C. The compressor clutch is earthed via the fan delay relay, the 14 blue/purple switched earth line running from the compressor clutch, through toeboard socket D and then to the fan delay relay. Thus the compressor clutch is engaged when the fan and compressor relay is energised, the fan delay relay is not energised, and the ambient temperature is above 0 °C. The switched feed to the servos is taken by the pink wire from C3 on the servo isolation relay, through toeboard socket D and then directly to the servos. A pink wire is looped from the servos to feed the voltage stabiliser module.

The coils which operate the fan and compressor relay and the servo isolation relay are fed by the A.C.U. fuse. To achieve the required switching combinations both the live and earth sides of both these relay coils are switched as described below.

The fan and compressor relay is energised when the ignition is switched on, except when the A.C.U. function switch is 'OFF' and or when the engine is cranking. This is achieved by feeding the relay coil via the A.C.U. function switch, and earthing it through the starter motor. The starter motor provides a low resistance earth path at all times except when the motor is fed with 12 volts which neutralises the feed to the fan and compressor relay coil causing it to become de-energised. The feed to the A.C.U. function switch is taken from the A.C.U. fuse by the red/brown wire. The switched feed to the fan and compressor relay coil is taken from the A.C.U. function switch by the brown/pink wire, through toeboard socket D to the relay coil. This brown/pink wire is live for all A.C.U. function switch positions except 'OFF'. The earth line for this relay coil is the brown/blue wire which is routed directly from the relay coil to the starter motor.

The servo isolation relay is energised when the ignition and the A.C.U. are switched on and the oil pressure transmitter contacts are closed, that is, when there is no oil pressure. The live feed to the relay coil is switched by the A.C.U. function switch, the brown/pink switched feed being taken from the switch at the same point as the feed to the fan and compressor relay. However, this feed to the servo isolation relay is routed via a diode in the A.C.U. diode board and is brought out on the white/blue wire, through toeboard socket D, to the servo isolation relay coil. The white/brown earth line for this relay is taken to the pressure transmitter via toeboard socket F, the wire being fed into the car at this point and then to the oil pressure warning lamp switch.

The sequence of events for the interlock circuits is that when the ignition is switched on, and if the A.C.U. function switch is at 'LOW', 'AUTO', 'HIGH' or 'DEF', the fan and compressor relay is energised and so supplies a feed to the fan speed module, the compressor clutch and the servo isolation relay.

The servo isolation relay is also energised due to the lack of an oil pressure signal and so the feed to the servos is broken by this relay. Whilst the engine is being cranked the fan and compressor relay becomes de-energised, thus breaking the feed to the fan speed module, the compressor clutch and the servo isolation relay. Thus, even if oil pressure builds up during cranking and the servo isolation relay becomes de-energised, there will be no feed to the servos because it has been broken by the fan and compressor relay. Although the fan speed module was receiving a live feed when the ignition was first switched on, the fans will not operate due to the action of the inhibit circuits.

The purpose of routing the switched feed to the servo isolation relay through a diode is to prevent the oil warning light from finding an earth path through the servo isolation relay coil and then through the fan and compressor relay coil to earth through the starter motor, when the A.C.U. function switch is at 'OFF'. Therefore if this diode has failed and is short-circuit, the oil pressure warning light will glow dimly when the A.C.U. is switched off. The symptoms of an open-circuit failure of this

Printed in England
© Rolls-Royce Motors Limited 1978
December 1978
T.S.D. 4200

diode are more obvious.

It can be seen therefore, that under normal working conditions the engine of the car must be running before any A.C.U. checks can be carried out. If this is not convenient the oil pressure transmitter can be disconnected by removing the white/brown wire. The A.C.U. circuits will then operate as soon as the ignition is switched on.

Inhibit circuits

The wiring diagram is shown in Figure C23.

The inhibit circuits are used to hold off the fans and compressor for a number of required temporary periods by means other than switching off their voltage supplies. The fans and compressor are held off for three conditions:- when the ignition is first switched on before the engine has been started; when the coolant temperature is below 44 °C. and the system is in the screen mode and so demanding hot air, and also when the system is in the screen mode and the lower quantity flap is in any position other than fully open, regardless of coolant temperature. Both the fans and compressor are held off for these periods by the fan module switch off relay. This relay has its moving contact, C2, connected to earth and its normally closed contact, C3 is connected by the blue/purple wire to the compressor clutch, via toeboard socket D. The normally open contact C1 is connected by the blue/black wire to the fan speed module. When this blue/black wire is connected to earth it holds off the output transistor in the fan speed module which then prevents the fans from being switched on. Therefore when the fan module switch off relay is not energised the compressor clutch is earthed by the relay and can operate normally and the blue/black wire to the fan speed module is open-circuit thus enabling the fans to be switched on. When the relay is energised the earth line to the compressor clutch is interrupted, preventing it from becoming engaged and the fan module is earthed so holding off the fans. The fan module switch off relay coil receives a switched live feed on the brown/pink wire from the A.C.U. function switch and so is live when the ignition is switched on and the switch is at any position other than OFF. The coil of the fan module switch off relay has two possible routes to earth. One earth path is the yellow/pink wire, through the A.C.U. diode board and then via the white/brown wire through toeboard socket F to the oil pressure transmitter to earth. The relay is energised using this earth route when the ignition and the A.C.U. are switched on and there is no oil pressure. This is how the fans and compressor are inhibited when the ignition is first switched on before starting the engine. The second earth route is the yellow/pink wire, through toeboard socket D to the fan delay relay. If the fan delay relay is energised, the fan module switch off relay is then earthed on the yellow/green wire either by the lower quantity flap micro-switch, via toeboard socket D or by the fan delay thermostat via toeboard socket D, and the A.C.U. diode board where the earth line emerges on the yellow/brown wire, and back through toeboard socket D. Thus this second earth route can only operate the fan module switch off relay when the fan delay relay is energised.

This relay is energised when the A.C.U. is operating in the screen mode except when 'DEF' has been selected. The feed to the fan delay relay is switched by the 25% mode change micro-switch in the upper servo. When the mode is to screen, the orange/purple wire from the upper servo is live and this feeds the fan delay relay via the A.C.U. diode board and the yellow wire which is routed through toeboard socket D. The fan delay relay coil is earthed by the orange wire through toeboard socket E to the A.C.U. function switch. This line is earthed for all switch positions except 'DEF' . This second earth route for the fan module switch off relay provides the necessary signal to hold off the fans and compressor when the coolant is below 44 °C. and the mode is to the screen, and when the lower quantity flap is not fully open when the mode is to screen. This circuit also prevents the fans from being held off when 'DEF' has been selected.

The reason for the lower quantity flap micro-switch inhibiting the fans is to initiate a fixed sequence of events when the fan delay thermostat operates, as a further refinement to the system. When the coolant temperature is below 44 °C. and the fan delay thermostat is shorting the yellow/brown wire to earth not only are the fans and compressor inhibited but the lower quantity relay is also held closed. Thus when the coolant temperature exceeds 44 °C. and the contacts on the fan delay thermostat open, the fans do not start immediately due to this being inhibited by the lower quantity flap micro-switch. However, when the thermostat does operate the lower quantity flap begins to open and when fully open it engages with the lower quantity flap micro-switch which starts the fans and engages the compressor clutch. The fans do not operate until the lower quantity flap is open to stop the effects of the fans starting up and causing a sudden surge of airflow to the upper system whilst the lower quantity flap is opening. The circuit controlling the lower quantity actuator will be described later.

The diode between the white/brown and yellow/pink wires is to prevent the oil pressure warning lamp from finding an earth through the fan module switch off relay coil and the fan and compressor relay coil, through the starter motor. If this diode has failed short-circuit, the oil pressure warning light will glow dimly when the A.C.U. is switched off.

A.C.U. function switch

The A.C.U. switch has two double wafers, connected by 10 flying leads into the A.C.U. loom behind the instrument board. Therefore this switch

can be completely disconnected locally making replacement a simple operation. A chart giving details of which wires are joined to which for all switch positions is shown in Figure C49. It is not recommended that the first procedure for suspected faulty switch operation is to check the switch in accordance with this chart unless the instrument board trim has already been removed as it is quite possible that the fault is in the inter-connections and associated components connected to the switch and these can be checked by removing far less trim.

Temperature selectors

These are two 10KΩ logarithmic potentiometers mounted on the instrument board, the upper potentiometer is inverse logarithmic and the lower is logarithmic, each potentiometer is shunted by a fixed resistance. If the potentiometers are disconnected from the A.C.U. loom, the resistance of the upper one should be between 370Ω and 150Ω and the lower one between 440Ω and 190Ω , both measured with the knobs in mid-position.

Temperature flap servos

The temperature flap servos are each driven by a small D.C. motor which drives a large gearwheel on the servo output shaft through a reduction gearbox.

The temperature flap levers are connected to the output shaft by means of a spring which is strong enough to operate the temperature flaps, but allows the servos to continue to rotate when the flap levers are restrained by stops, to give a characteristic as shown is Figures C55 and C56. This controlled servo overtravel is designed to make in-car temperatures have a linear relationship to servo angular position. On the lower servo, this overtravel occurs on heating, where the in-car temperature increases after the flap is at full hot due to the servo still opening the water tap and increasing the fan speed. The overtravel occurs on the upper servo on cooling, where the temperature flap is moved to full cold before the servo is at full cold and extra cooling effort is obtained solely by the servo increasing the fan speed.

Two small gearwheels are driven by the gearwheel on each servo output shaft which drive two potentiometers, a fan speed potentiometer and a servo position potentiometer. The servo position potentiometers are each connected to their relative servo modules and the fan speed potentiometers are connected in parallel and then to the fan speed module. Also connected to the servo output shaft is a nylon disc which has two sets of cams moulded into it; microswitches are positioned to engage with these cams to be operated at particular servo angular positions. The upper servo is fitted with four micro-switches but the lower servo only has two. Two of the micro-switches on each servo are used as limit switches so that the electrically driven servo motors are switched off at the required extremes of servo travel. The remaining two mirco-switches on the upper servo are used to switch relays or actuators associated with the A.C.U. system. One switch operates at 15% servo travel and is used to signal the lower quantity actuator, the other switch operates at 25% servo travel and signals the facia/screen mode actuator.

The output shaft of the lower servo is used

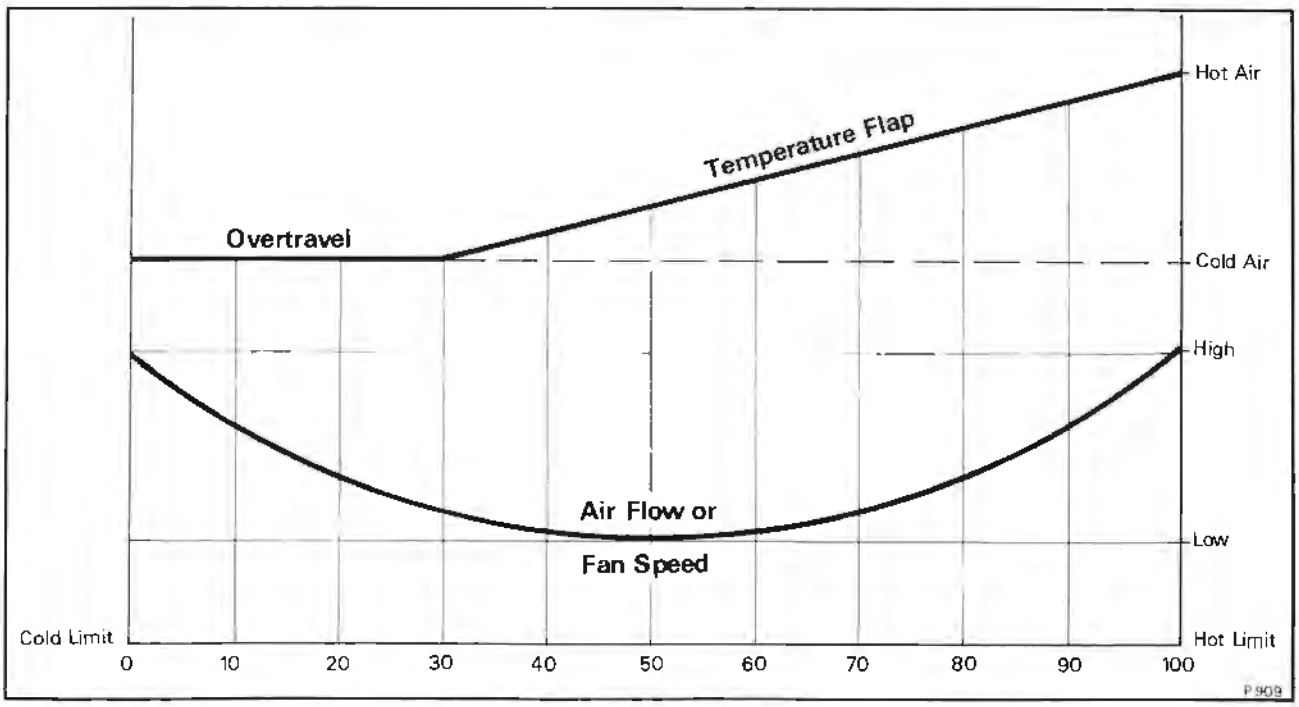

Fig. C55 Servo operation - upper system

Printed in England

© Rolls-Royce Motors Limited 1978

December 1978

T.S.D. 4200

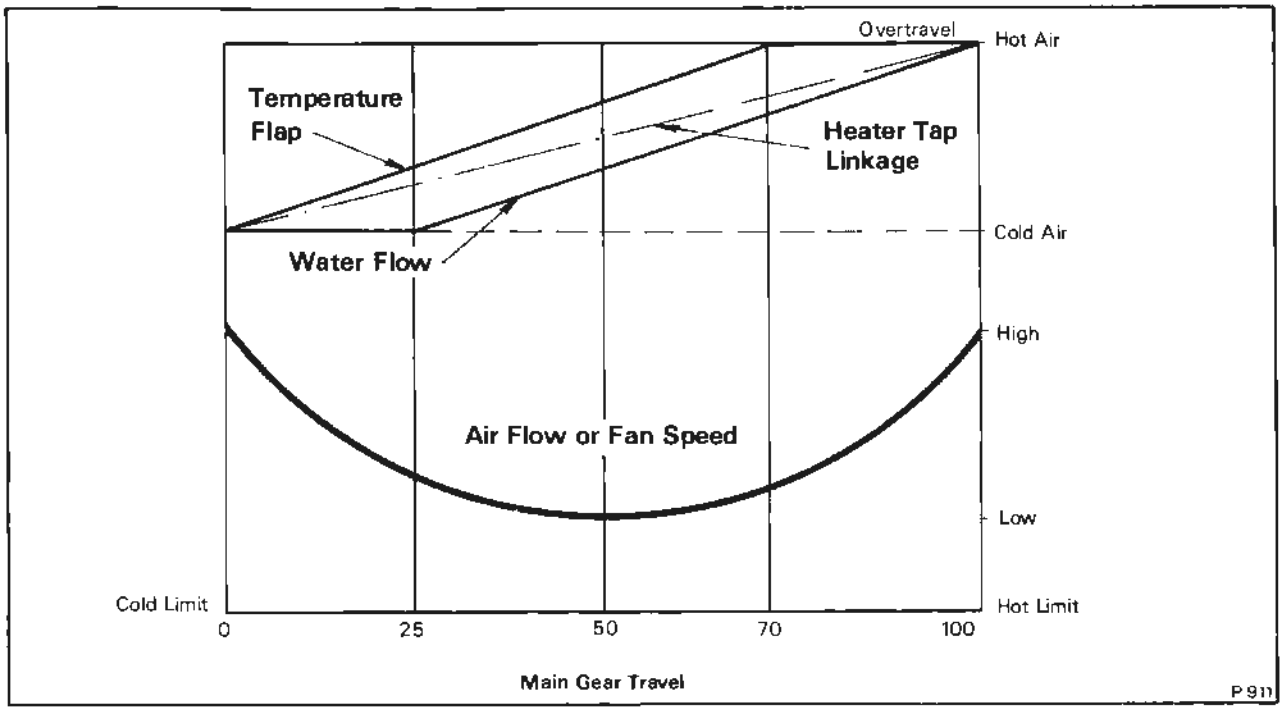

Fig. C56 Servo operation - lower system

to operate the water tap, but the output shaft of the upper servo is not used to perform any external function. The potentiometers and micro-switches in the servos have been set up very carefully using specialist test equipment. Therefore it is inadvisable to dismantle any part of the servo mechanism as these settings will invariably be altered. Not only will this cause the servo not to operate satisfactorily but it could easily be damaged by potentiometers being forced past their mechanical stops or the flap lever stalling the servo by fouling the servo mechanism due to incorrect setting of the limit switches.

The servo motor used is a small permanent magnet D.C. unit, which is bi-directional depending upon the polarity of its supply voltage. It will be seen from Figure C57 that when RL1 is energised point A is at earth potential and point B is at +7 volts but when RL2 is energised point B is at earth potential and point A is at +7 volts The relay control circuits are so designed that only one relay at a time can be energised. Thus when RL1 is energised the servo moves in the cold direction, the supply being broken when the servo reaches the cold limit micro-switch. When RL2 is energised the servo moves in the hot direction, the supply being broken when the servo reaches the hot limit micro-switch. In order to prevent a P.M. motor from running on once the supply is cut off, the armature must be shorted out to provide dynamic braking. Figure C57 shows that dynamic braking is provided by the relay contacts and the limit switch contacts. In the interests of current economy, the stabiliser circuit is switched on only when the servo motor is running. This is done by means of the two current routing diodes D1 and D2. Thus when RL1 is energised, the relay contacts carry both the motor current plus the Zener diode bleed current.

Servo modules

A faulty servo module is difficult to diagnose on the car. If possible a servo module test box should always be used If this is not available a servo module fault should normally be checked by substitution. As a faulty servo module will almost certainly result in the servo not operating it is recommended that fault flow chart 1 is followed.

Recirculation actuators

The two recirculation actuators are connected in parallel through two diodes to prevent them from running on by one actuator feeding the other. It is normal for the right-hand actuator to sometimes turn through two revolutions. The two actuators are fed from the recirculation relay, the centre contact C2 being fed directly from fuse number 3. The relay winding is fed from the same fuse but is switched by the A.C.U. switch such that W2 is live for all switch positions except off. The relay winding is earthed through an in-line diode and the upper servo cold limit micro-switch. This earth path is broken only when the upper servo moves to full cold. To check the operation of this switch it is essential to be positive that the servo has moved to full cold and has operated the limit switch. This is

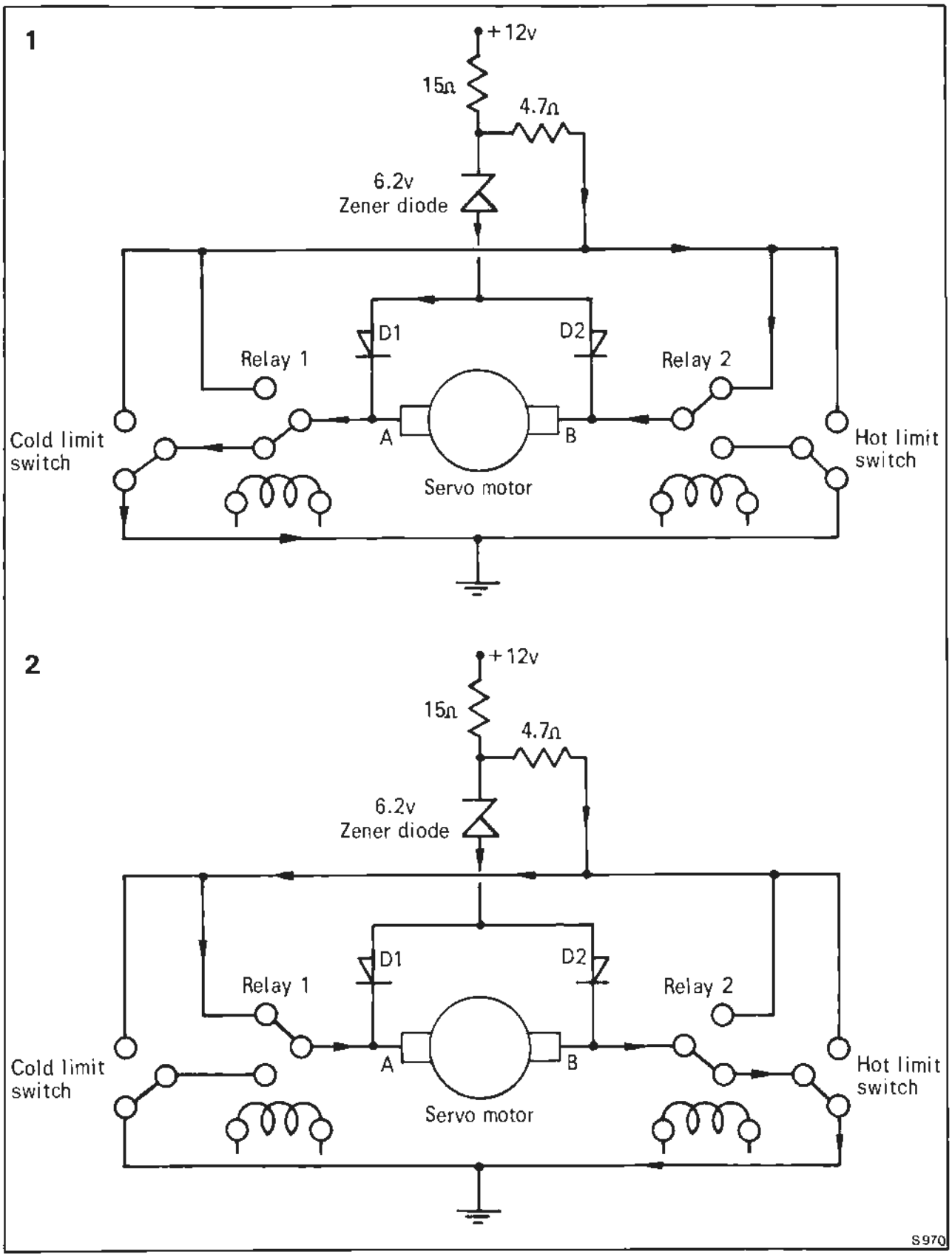

Fig. C57 Servo motor circuits

1 Servo moves to 'Full cold'

2 Servo moves to 'Full hot'

Printed in England
© Rolls-Royce Motors Limited 1978
December 1978
T.S.D. 4200

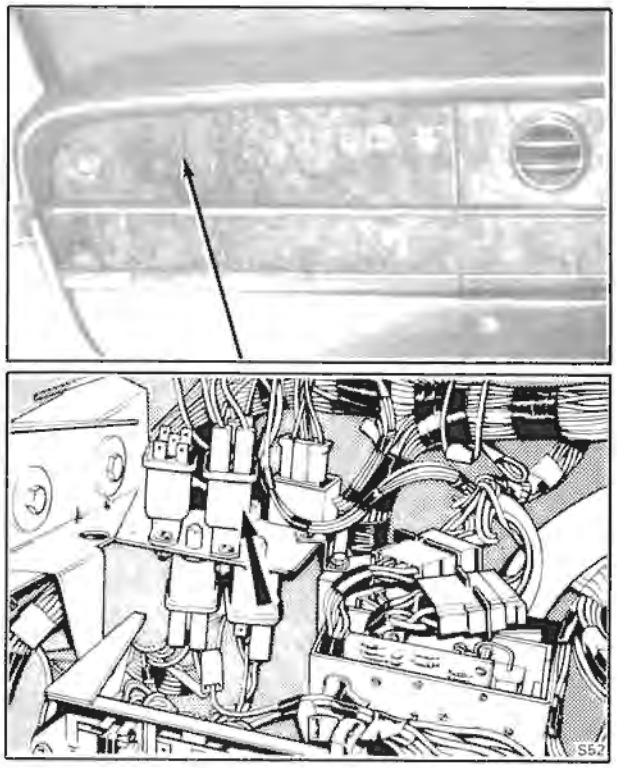

Fig. C58 Recirculation relay
Right-hand drive cars

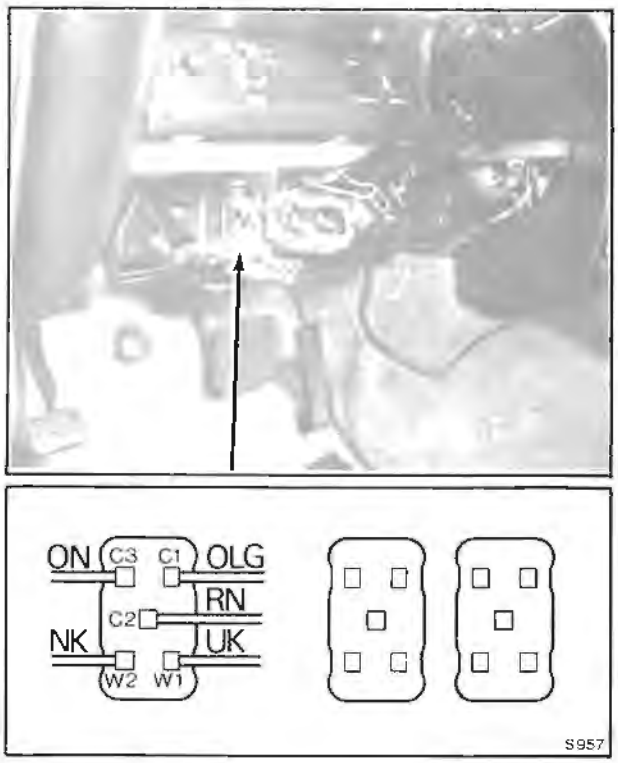

Fig. C59 Recirculation relay
Left-hand drive cars

most easily achieved by using the A.C.U. test box. N.B. It is by no means true to say that the servo will always move to full cold when minimum temperature has been selected.

When the cold limit switch has operated, the blue/pink wire becomes live and the purpose of the in-line diode is to prevent this voltage from being fed back along the brown/pink wire through the relay coil as it is possible for this to latch in any of the other relays being fed from this line.

Lower quantity actuator

The lower quantity actuator is operated primarily by the upper servo 15% micro-switch such that the quantity actuator is closed on the cold side of 15% and open on the hot side. However this is complicated by two overriding conditions. The lower quantity flap is always closed when 'DEF' is selected on the A.C.U. function switch, or when the coolant temperature is below 44 °C. Therefore fault finding is simplified by ensuring that neither of these overriding conditions exists. Check therefore that the A.C.U. switch is not at 'DEF' and disconnect the yellow/brown wire on the fan delay thermostat to simulate the coolant being warm. (Obviously if the coolant is warm and disconnecting this yellow/brown wires cures the trouble then the thermostat is faulty). With the aid of an A.C.U. test box, motor the upper servo to full hot where the lower quantity flap should be in the open position. A positive feed should now be present at the orange/white wire to the lower quantity actuator, having been fed from the pink feed into the servos, through the upper servo 15% micro-switch, out to the A.C.U. function switch, through the lower quantity relay which should not be energised, and finally through the A.C.U. diode board. The feed to the servos via the pink wire is fed from the servo isolation relay. If the pink wire is not live, see Interlock circuits.

Motor the upper servo to full cold where the 15% micro-switch should have changed over to feed the green/pink wire to the lower quantity actuator, which should make the actuator run to the closed position.

If 'DEF' is selected, the orange/white actuator feed is broken by the A.C.U. function switch, and a new supply is fed directly from the A.C.U. fuse by the A.C.U. function switch, via the diode board to the actuator feed which drives the actuator to the closed position.

If the A.C.U. function switch is at 'LOW', 'AUTO' or 'HIGH', the upper servo is on the hot side of 15%, and the coolant temperature is above 44 °C. (i.e. the yellow/brown wire is not being earthed) the lower quantity flap should be open as described previously. However, if the coolant is cold (i.e. the yellow/brown wire is connected to earth) the lower quantity relay should be energised, joining C1 to C2. Thus the 15% micro-switch signal will be overridden and the closed contact of the lower quantity actuator will be fed from C1 on the lower

quantity relay.

A diode between the orange/white and blue/white cables prevents the lower quantity relay contacts being fed from the lower quantity actuator when it is travelling towards the closed position. Such a feed would cause the lower quantity relay to vibrate continuously as the coil would be fed through its own contacts. A diode between the normally open contacts of the lower quantity relay and the green/pink cable of the actuator prevents the lower quantity relay coil from being fed through its own normally open contacts. A feed back to C1 would cause the relay to latch in once the coil had been energised.

The diode between the A.C.U. switch and the green/pink cable to the upper servo prevents a feed from the servo, which is not ignition switched, from being fed back to the A.C.U. fuse when 'DEF' has been selected. If this were permitted to occur the A.C.U. circuits would feed into the ignition switched circuits and it would be impossible to switch off the engine when operated on 'DEF'.

The fan delay thermostat and the lower quantity flap microswitch inhibit the fans but the lower quantity relay must only be energised by the thermostat therefore a diode is inserted between the yellow/brown cable of the relay and the yellow/green cable of the microswitch.

Mode actuator

The mode actuator is controlled by the upper servo 25% micro-switch which is fed by the pink wire from the servo isolation relay and if this is not live the interlock circuits are at fault. When the upper servo is to the cold side of 25% servo position the micro-switch gives a feed to the orange/blue wire which is connected directly to the mode actuator. Thus the mode flap is driven to the facia position. When the servo is to the hot side of 25% servo position the orange/purple becomes live which is fed to the A.C.U. diode board and emerges on the orange/red wire which drives the mode actuator to screen. These are the only circuits which control the mode actuator, there being no overriding circuits, however the upper servo 25% micro-switch is used to command other functions.

The diode between the orange/red and orange/purple cable prevents the mode actuator from feeding the fan delay relay whilst it is being driven to the facia position.

Voltage stabiliser

This is the unit which supplies the 9.1V supply to the servo modules and the two 7.0V supplies to the servo motors. The circuit diagram is shown in Figure C60. The three stabilised voltages are obtained from three independent zener diode networks, all of which obtain their unstabilised 12 volt supply from the pink wire which is fed from the servo isolation relay via toeboard socket D and the servo connections. The 9.1V volt servo module supply consists of a simple divider network comprising a 15Ω resistor and 9.1 volt zener diode. The resistor is fed from the pink wire and is connected in series with the diode which is earthed by the black/pink wire and then through the black wire to the L.H. A post earth point. The pink/red 9.1 volt line is taken from the junction of the resistor and diode, the voltage remaining constant across the diode by leaking varying amounts of current to earth such that the unstabilised portion of the supply voltage is developed across the resistor. This 9.1 volt line is tested by the A.C.U. test box, if the test box reading is between 86 and 96 the circuit is correct.

A reading in excess of 100 indicates that the circuit is not stabilising due either to the earth line being open-circuit or the zener diode itself being faulty. A reading of zero can be due to either an open or short-circuit in any of the stabiliser connections. A short-circuit in the pink/red wire will not damage the stabiliser and a short-circuit in the pink wire will blow the fan and compressor fuse. It is also worthwhile to check the servo earth as the module may be operating correctly but the test box may not be finding an earth through the servo earth.

The 7.0 volt supplies are identical to each other and independently serve the two servo motors. These supplies cannot be tested using the A.C.U. test box and so a fault can be difficult to diagnose. If one or both of these supplies are faulty then almost certainly the relative servo will either not run, or run much too quickly. If a servo will not run the first action should be to follow fault flow chart C42 as this will eliminate all other possible causes of servo failure. If servo power supplies are then shown to be the cause of the fault, proceed as follows:-

Lower servo power supply

The 12 volt unstabilised supply is the pink wire which is fed from the fan and compressor fuse. The stabiliser consists of a 15Ω resistor, fed from the pink wire, in series with a 6.2 volt zener diode. The diode has two alternative earth paths, through D1 or D2 which are switched by the servo module. Thus the pink/black and pink/brown wires from these diodes are routed to the lower servo module.

The module connects either one of these wires to earth, via the relays on the servo module to the tunnel earth point, depending upon the direction of servo travel. The stabilised 7.0 volt line is brought out from the junction of the 15Ω resistor and zener diode, through a 4.7Ω current limiting resistor to the pink/light green wire which is taken to the lower servo module. The current limiting resistor prevents the servo motor from burning out if it becomes mechanically stalled. To test the stabiliser, disconnect the 9 way plug and socket and connect a 12V feed to the pink wire and connect the black/pink to 0V. Now connect a voltmeter across the pink/light green and black/pink wires and the

Printed in England
© Rolls-Royce Motors Limited 1978
December 1978
T.S.D. 4200

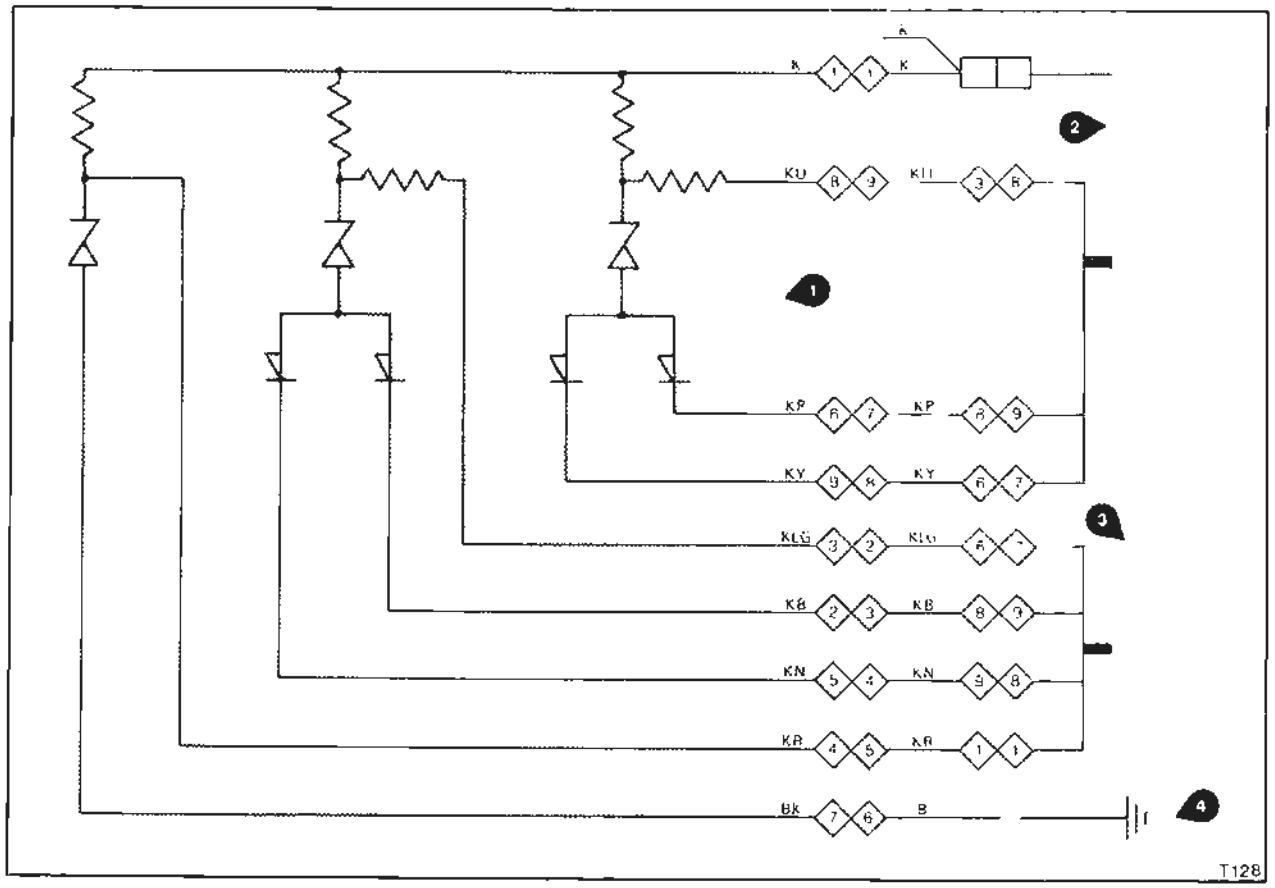

Fig. C60 Voltage stabiliser - Schematic diagram

1 Voltage stabiliser
2 Upper servo
3 Lower servo
4 Left-hand 'A' post earth

reading should be 12 volts. Next connect the pink/black wire to the black/pink and the reading should fall to 7.0V ± 0.5V. Disconnect the pink/black wire and connect the pink/brown wire to the black/pink wire and the reading should fall to 7.0V ± 0.5V. With a 12Ω resistor connected as a load across the voltmeter repeat the two tests, and in this mode neither voltage reading should be less than 4.5 volts.

If any of these readings are incorrect the module is faulty and should be replaced.

Upper servo power supply

This is identical to the lower servo power supply

To test the stabiliser,disconnect the 9 way plug and socket and connect a 12 volt feed to the pink wire and connect the black/pink wire to 0V. Now connect a voltmeter between the pink/blue and black/pink wires and the reading should be 12 volts. Next connect the pink/purple wire to the black/pink and the reading should fall to 7.0V ± 0.5V.

Disconnect the pink/purple wire and connect the pink/yellow wire to the black/pink wire and the reading should fall to 7.0 ± 0.5V. With a 12Ω resistor connected across the voltmeter as a load, repeat the two tests, and in this mode neither voltage reading should be less than 4.5 volts. If any of these readings are incorrect the module is faulty and should be replaced.

The stabiliser unit consists only of the U-shaped chassis with three large diodes mounted on it.

If the stabiliser unit is found to operate correctly and the fault persists, the loom connecting the module to the servos should be checked.

Fan speed module

Fan speed is controlled by an electronic circuit which supplies the fan motors with a positive going square wave at a frequency of 150 Hz at an amplitude of 12 volts. At this frequency the inertia of the fan motors is sufficient to integrate these pulses of energy such that the motors run smoothly at a speed relative to the mean power of the square wave. Speed is made variable by changing the shape of the square wave such that the ratio of time for which the motors are switched on, to the time for which they are switched off is varied, thus changing the mean power of the waveform.

The fan speed module consists of a waveform generator feeding a power switching circuit which drives the fan motors. The waveform generator, or switching circuit, used in the fan speed module can

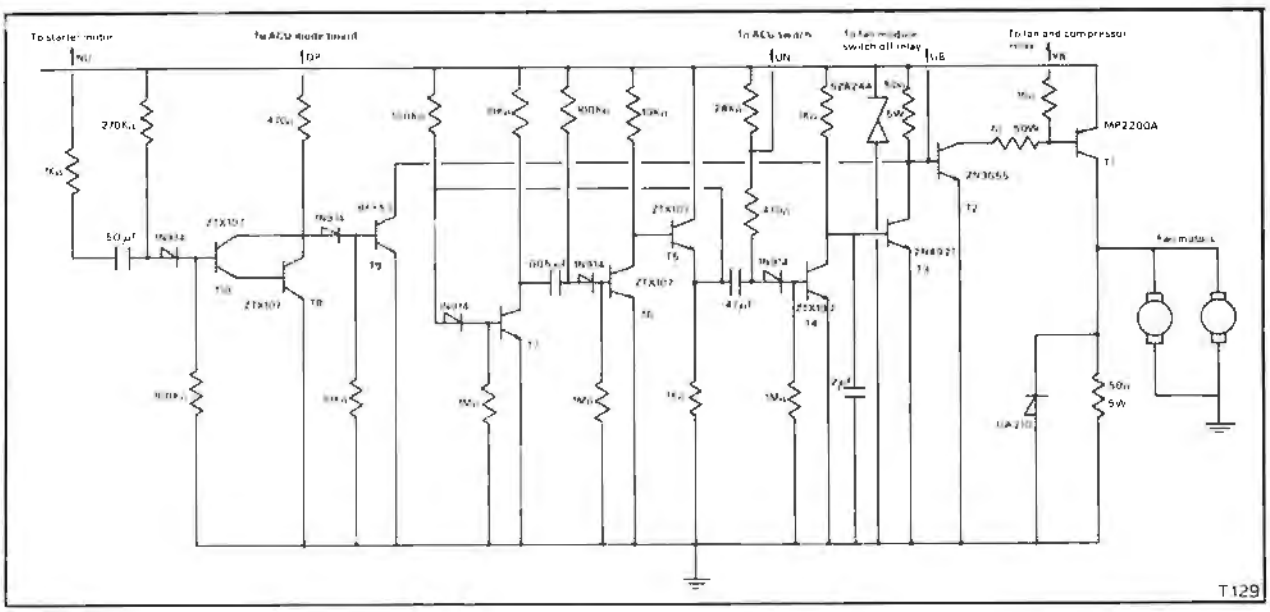

Fig. C61 Fan speed module - Theoretical diagram

change the percentage on-time from 20 to 100%, resulting in a speed variation of 1200 r.p.m. to maximum, which is in the region of 3,500 r.p.m. depending upon the supply voltage and the duct loading. At maximum fan speed, when the fans are switched on permanently, the volt-drop across the fan speed module is less than 1 volt and so power loss can be considered to be negligible.

The supply for the fan speed module is the 44 yellow/black wire which is fed from the fan and compressor fuse, via the fan and compressor relay and through toeboard socket E. (Thus the supply to the fan speed module is switched on when the fan and compressor relay is energised). The purpose of the yellow/black wire which runs in parallel with the 44 yellow/black wire is to reference the base connection of the output transistor to as low an impedance positive supply as possible to prevent thermal runaway in the output transistor. The two fan motors are fed by the 44 yellow/green wires, the feeds being routed separately from each fan motor, through the toeboard connections and back to the fan speed module. Although the fan speed module is protected by the fan and compressor fuse, a short on one of the 44 yellow/green wires can damage the output transistor, as it is quite possible for the transistor to blow more quickly than the fuse. Therefore it is essential that if it is suspected that a fan module is faulty, the 44 yellow/green lines must be tested for short-circuits before the module is replaced.

A connection to the base of T2 (see Fig. C61) is brought out of the module on the blue/black wire to facilitate fan inhibit. This wire is connected to the fan module switch off relay and the fans should be inhibited when this relay is energised. If the fans will not operate it is always advisable to first disconnect the blue/black wire from the relay to find which circuit, the inhibit, or the fan module circuit, is at fault.

The blue/brown wire is connected in the fan module to the switching circuit to facilitate external variation of the resistance in the time-constant circuit which controls fan speed. To obtain the required fan speeds the blue/brown wire is connected directly to the A.C.U. function switch which connects various resistors between the blue/brown and a positive feed, the yellow/black, for the different switch positions. On 'LOW', 36KΩ is connected between the blue/brown wire and the yellow/black, on 'AUTO', the fan speed potentiometers in series with 6.8KΩ are connected across these wires, and on 'HIGH' and 'DEF', the potentiometers are connected directly across these wires. Thus if the blue/brown wire is open-circuit the fans will run very slowly or stop, and if the blue/brown wire is shorting to a 12 volt line the fans will run at maximum speed.

The fan speed potentiometers are connected such that the two ends of the track are connected together and then two wires are connected to each potentiometers, one to this junction and one to the sliding contact. The result of this is that the resistance between the two potentiometer wires is zero at both extremes of potentiometer travel and a quarter of the resistance of the potentiometer track when the sliding contact is in mid-position. The two potentiometers, upper and lower fan speed, are then connected in parallel having the effect that the resistance of this network is zero when either or both potentiometers are at either extreme of their sliding contact positions, and a maximum resistance of one eighth of the potentiometer track resistance only when both sliding contacts are in mid-position. The resistance of each fan speed potentiometer is 200KΩ giving a maximum effective resistance of

Printed in England
© Rolls-Royce Motors Limited 1980
February 1980
T.S.D. 4200

25KΩ when both servos are in mid-position. This network enables both upper and lower A.C.U. systems to share a common fan system because the fans will always run at the speed required by the system which is demanding the larger quantity of hot or cold air. The 6.8KΩ resistor in series with the fan speed potentiometers is to limit the maximum fan speed on 'AUTO', true maximum being obtainable only by selecting 'HIGH' or 'DEF'. The 12 volt supply to the fan speed potentiometers is the yellow/black wire which is fed directly to the servos. The return from the fan speed potentiometers is the orange/yellow wire which is fed from the servo connections directly to the A.C.U. function switch where it is switched onto the blue/brown wire via the 6.8K resistor on 'AUTO' but directly to the blue/brown on 'HIGH'.

The fan speed module also incorporates the fan delay circuit which prevents the fans from running for 13 seconds after starting the car when the system is on the screen mode and is not being inhibited by the fan delay thermostat.

The fan delay circuit is mounted on the printed circuit board inside the module, the supply to the delay circuit is the orange/purple wire which is live only when the upper system is on the screen mode. The 14 brown/blue wire from the starter motor initiates the delay, the delay period beginning at the end of the cranking period. The orange/purple wire is connected from the fan module to the A.C.U. diode board and from here back to the upper servo 25% micro-switch via the upper servo plug and socket. The 14 brown/blue wire from the starter motor is run via the fan and compressor relay and toeboard socket C, back to the fan speed module.

Chapter C

Supplement Number 1

Applicable to all cars from car serial numbers

Silver Shadow II	-	SRX 34573
Silver Wraith II	-	LRG 34601
Bentley T2	-	SBH 34775
Corniche Saloon	-	CRH 34830
Corniche Convertible	-	DRX 33029

The facia override switch has been added

For all other components and fault diagnosis, refer to Chapter C.

Printed in England
© Rolls-Royce Motors Limited 1978
January 1979
T.S.D. 4200

Supplement 1-2

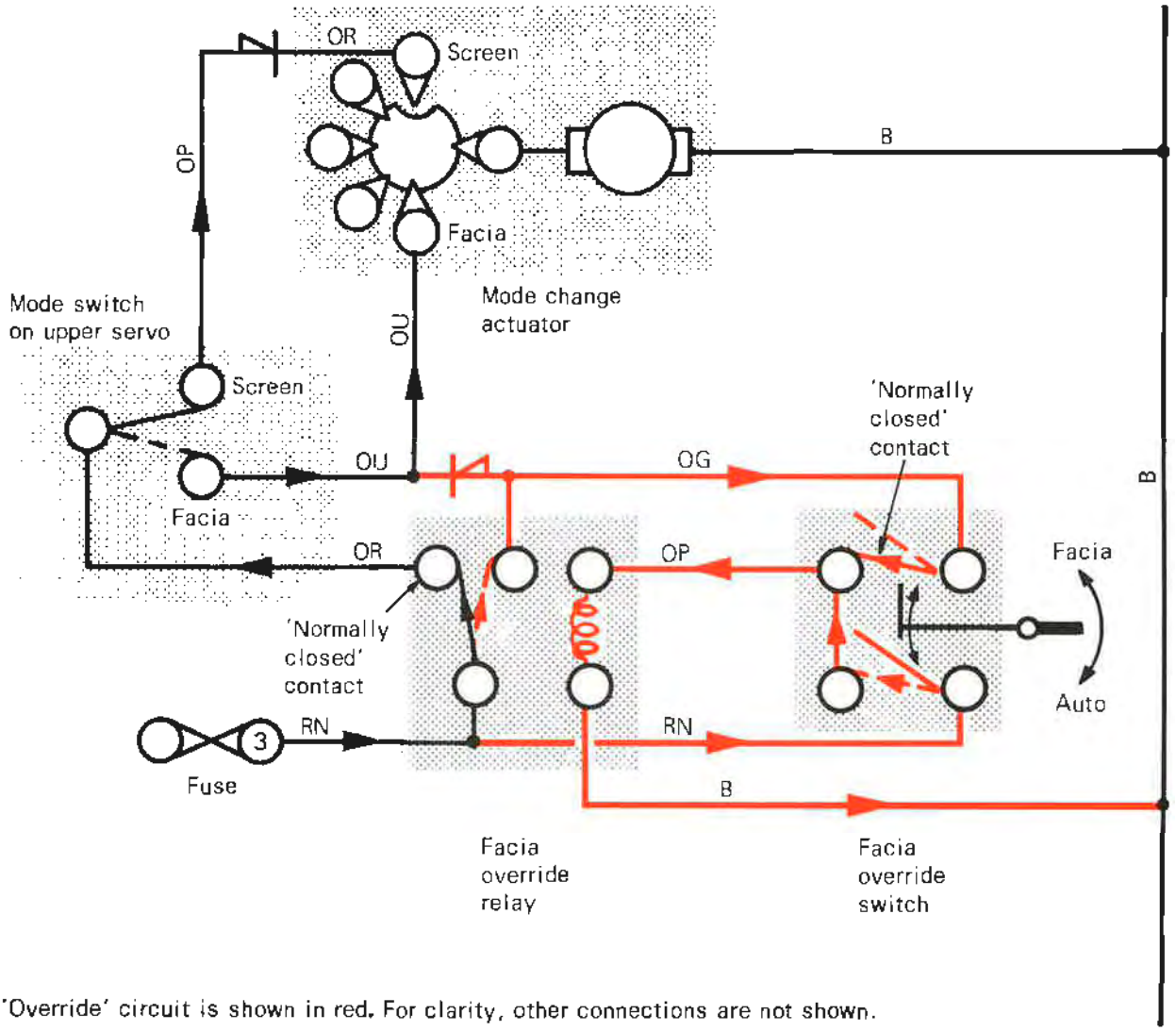

'Override' circuit is shown in red. For clarity, other connections are not shown.

Fig. C1 Supp. 1. Facia override switch

Description

When the A.C.U. is functioning normally and air is being directed from the windscreen outlets, the driver may, if he prefers, direct the air from the facia outlets by momentarily moving the self-centring 'Facia/Auto' switch to the 'Facia' position. The A.C.U. will revert to the normal 'Automatic' mode when 'Auto' on the switch is selected or the car ignition is switched off.

Operation (refer to Fig. C1 Supp. 1.)

During normal operating conditions in the 'Automatic' mode, a live feed from fuse 3 to the mode switch on the upper servo is routed through the 'normally closed' contacts of the facia override relay. Dependent upon the position of the mode switch, the mode change actuator and flap directs the air to either the screen or facia.

If the mode switch (and therefore the mode flap) is in the 'Screen' position, moving the 'Facia/Auto' switch to 'Facia' energises the coil of the facia override relay. The 'normally closed' contacts of the relay are broken which disconnects the live feed from the 'Screen' terminal of the mode switch, the other contact of the relay (the 'normally open' contact) then connects the live feed through the diode directly to the 'Facia' terminal of the actuator. In addition to supplying a live feed to the actuator, the contact also supplies a live feed to the relay coil through the 'normally closed' contact of the override switch thereby keeping it energised. The circuit is broken when 'Auto' is selected on the override switch or the car ignition is switched off.

The diode between the orange/blue and orange/green cables prevents the relay from becoming energised when the mode switch is in the 'Facia' position and the system is operating in the normal 'Automatic' mode.

Chapter D

Lubricants

Section

D1 Cars for countries other than U.S.A. and Canada prior to serial number 50 000

D2 Cars for U.S.A. and Canada prior to serial numbers 50 000

D3 Corniche and Camargue cars for countries other than U.S.A. and Canada from serial number 50 001

D4 Corniche and Camargue cars for U.S.A. and Canada from serial number 50 001

Printed in England

© Rolls-Royce Motors Limited 1979

May 1979

TSD 4200

Chapter D

Issue record sheet 1

April 1982

The dates quoted below refer to the issue date of individual pages within this chapter.

Section	D1	D2	D3	D4
Page No.				
1	Apr 82	Apr 82	Apr 82	Apr 82
2	Apr 82	Apr 82	Apr 82	Apr 82
3				
4				
5				
6				
7				
8				
9				
10				
11				
12				
13				
14				
15				
16				
17				
18				
19				
20				
21				
22				
23				
24				
25				
26				
27				
28				
29				
30				
31				
32				
33				
34				
35				
36				
37				
38				
39				
40				
41				
42				
43				
44				
45				
46				
47				
48				

Printed in England
© Rolls-Royce Motors Limited 1982

Section D1

Lubricants

Cars for countries other than U.S.A. and Canada prior to serial number 50 000

†Engine, †SU Carburetter dampers, Hand oiling points

BP
BP Super Viscostatic
BP Visco Route
BP Visco Coranda
BP Pilote 2500
BP Pilote 3000
BP Strato

Castrol
Castrol GTX
Castrol GTX-2 Turbo Tested
Castrolite

Duckhams
Duckhams 'Q' Motor Oil

Esso
UNIFLO
Esso SUPERLUBE

Mobil
Mobil Super

Shell
Shell Super Motor Oil (20W/50)
Shell Super Motor Oil (15W/50)
Shell Super Motor Oil (15W/40)
Shell Super Motor Oil (10W/40)

†Recommended engine oil grades for cars operating in low temperatures.

For constant operation in ambient temperatures of between 0°C. and -23°C.(32°F. and -10°F.), use a 10W/30 grade oil.

For constant operation in ambient temperatures of -23°C. (-10°F.) and below, use a 5W/20 grade oil.

***Torque Converter Transmission, *Steering Pump**

BP
BP Autran DXII

Castrol
Castrol TQ Dexron ® II

Duckhams
D-Matic ATF (Dexron II)

Esso
Esso Automatic Transmission Fluid (Dexron)

Mobil
Mobil ATF 220 (Dexron)

Shell
Shell Automatic Transmission Fluid Dexron II

Texaco
Texamatic Fluid 9226 (Dexron II)

*Also approved any Dexron Transmission Fluid.

Final Drive Unit, Drive-shaft Ball and Trunnion Joints, Rack and Pinion Steering Unit

BP
BP Gear Oil 90 EP
BP Gear Oil FE 80/90 EP
BP Gear Oil FE 85W/140 EP

Castrol
Castrol Hypoy EP 90
Castrol Hypoy B EP 90
Castrol Hypoy C

Duckhams
Hypoid 90 S

Esso
Esso Gear Oil GX 80W/90
Esso Gear Oil GX 85W/140

Mobil
Mobilube HD 90

Shell
Shell Spirax 90 EP

Front and Rear Hubs, Drive-shaft Outer Universal Joints, Propeller shaft Universal Joints

BP
BP Energrease L2

Castrol
Castrol LM Grease

Duckhams
LB 10 Grease

Esso
Multi-purpose Grease H

Printed in England
© Rolls-Royce Motors Limited 1982
April 1982
TSD 4200

Mobil
Mobilgrease MP

Shell
‡Shell Retinax A

‡First preference

Height Control Valve Operating Rod Ball Joints, Steering Joints, Parking Brake Linkage Clevis and Fulcrum Pins

Rocol MTS 1000 Grease

Fuel Tank Drain Plug

Rocol MV3
Rocol AS Spray

Parking Brake Inner Cable and Pulley Grooves

Midland Silicones MS44 Grease

Refrigeration compressor

Frigidaire 525 Viscosity Oil

Hydraulic Brakes and Automatic Height Control System

Castrol RR 363 Brake Fluid.
This fluid exceeds current S.A.E. J1703 specifications in many respects and complies with D.O.T. 3 grade of FMVSS 116.

Power Operated Hood Reservoir

BP
BP HLP 22

Castrol
Castrol Hyspin VG22

Esso
Esso Nuto H22

Mobil
Mobil DTE 11
Mobil DTE 13

Shell
Shell Tellus Oil 22
Shell Tellus Oil 23

Section D2

Lubricants

Cars for U.S.A. and Canada prior to serial number 50 000

†Engine, †Carburetter Dampers, Hand Oiling Points

BP
BP Super Viscostatic 10W/40

Castrol
Castrol GTX

Duckhams
Duckhams 'O' Motor Oil

Exxon/Imperial
UNIFLO

Mobil
Mobil Super

Shell
Fire and Ice (USA)
Super Plus (Canada)

†Recommended engine oil grades for cars operating in low temperatures.

For constant operation in ambient temperatures of between 0°C. and -23°C.(32°F. and -10°F.), use a 10W/30 grade oil.

For constant operation in ambient temperatures of -23°C. (-10°F.) and below, use a 5W/20 grade oil.

***Torque Converter Transmission, *Steering Pump**

BP
BP Autran DX II

Castrol
Castrol TQ Dexron ® II

Exxon/Imperial
Esso Automatic Transmission Fluid (Dexron II)

Mobil
Mobil ATF 220 (Dexron)

Shell
Shell Donax T6
ATF Dexron

Texaco
Texamatic Fluid 9226
*Also approved any Dexron Transmission Fluid

Final Drive Unit, Drive-shaft Ball and Trunnion Joints, Rack and Pinion Steering Unit

BP
BP Gear Oil 90 EP
BP Gear Oil FE 80W/90 EP
BP Gear Oil FE 85W/140 EP

Castrol
Castrol Hypoy 80W/90
Castrol Hypoy C 80W/90

Duckhams
Duckhams Hypoid Gear Oil 80W/90 EP

Exxon/Imperial
Exxon Gear Oil GX 80W/90
Exxon Gear Oil GX 85W/140
Exxon Gear Oil GX 90

Mobil
Mobilube HD 90

Shell
Shell Spirax 90 EP

Front and Rear Hubs, Drive-shaft Outer Universal Joints, Propeller Shaft Universal Joints

BP
BP Energrease 2

Castrol
Castrol MP Grease
Castrol LM Grease

Duckhams
Duckhams LB 10 Grease

Exxon/Imperial
Ronex MP Grease
Esso Unitol

Mobil
Mobilgrease MP

Shell
Shell Darina AX

Height Control Valve Operating Rod Ball Joints, Steering Joints, Parking Brake Linkage Clevis and Fulcrum Pins

Rocol MTS 1000 Grease

Printed in England
© Rolls-Royce Motors Limited 1982
April 1982
TSD 4200

Fuel tank drain plug

Rocol MV3
Rocol AS Spray

Parking Brake Inner Cable and Pulley Grooves

Midlands Silicones MS 44 Grease

Refrigeration compressor

Frigidaire 525 Viscosity Oil

Hydraulic Brakes and Automatic Height Control System

Castrol RR 363 Brake Fluid.
This fluid exceeds current S.A.E. J1703 specifications in many respects and complies with D.O.T. 3 grade of FMVSS 116

Power Operated Hood Reservoir

BP
BP HLP 22

Esso
Esso Nuto H22

Mobil
Mobil DTE 11
Mobil DTE 13

Shell
Shell Tellus Oil 22
Shell Tellus Oil 23

Section D3

Lubricants

Cars for countries other than U.S.A. and Canada from serial number 50 001

†Engine, †SU Carburetter Dampers, Hand Oiling Points

BP
BP Super Viscostatic
BP Visco Route
BP Visco Coranda
BP Pilote 2500
BP Pilote 3000
BP Strato

Castrol
Castrol GTX
Castrol GTX-2 Turbo Tested
Castrolite

Duckhams
Duckhams 'Q' Motor Oil

Esso
UNIFLO
Esso SUPERLUBE

Mobil
Mobil Super

Shell
Shell Super Motor Oil (20W/50)
Shell Super Motor Oil (15W/50)
Shell Super Motor Oil (15W/40)
Shell Super Motor Oil (10W/40)

†Recommended engine oil grades for cars operating in low temperatures.

For constant operation in ambient temperatures of between 0°C. and -23°C. (32°F. and -10°F.), use a 10W/30 grade oil.

For constant operation in ambient temperatures of -23°C. (-10°F.) and below, use a 5W/20 grade oil.

***Torque Converter Transmission, *Steering Pump**

BP
BP Autran DX II

Castrol
Castrol TO Dexron ® II

Duckhams
D-Matic ATF (Dexron II)

Esso
Esso Automatic Transmission Fluid (Dexron)

Mobil
Mobil ATF 220 (Dexron)

Shell
Shell Automatic Transmission Fluid Dexron II

Texaco
Texamatic Fluid 9226 (Dexron II)

*Also approved any Dexron Transmission Fluid.

Final Drive Unit, Drive-shaft Ball and Trunnion Joints, Rack and Pinion Steering Unit

BP
BP Gear Oil FE 80W/90 EP
BP Gear Oil FE 85W/140 EP
BP Gear Oil 90 EP

Castrol
Castrol Hypoy EP 90
Castrol Hypoy B EP 90
Castrol Hypoy C

Duckhams
Hypoid 90 S

Esso
Esso Gear Oil GX 80W/90
Esso Gear Oil GX 85W/140

Mobil
Mobilube HD 90

Shell
Shell Spirax 90 EP

Front and Rear Hubs, Drive-shaft Outer Universal Joints, Propeller Shaft Universal Joints

BP
BP Energrease L2

Castrol
Castrol LM Grease

Duckhams
LB 10 Grease

Esso
Multi-purpose Grease H

Printed in England
© Rolls-Royce Motors Limited 1982
April 1982
TSD 4200

Mobil
Mobilgrease MP

Shell
‡Shell Retinax A

‡First preference

Height Control Valve Operating Rod Ball Joints, Steering Joints, Parking Brake Linkage Clevis and Fulcrum Pins

Rocol MTS 1000 Grease

Fuel tank drain plug

Rocol MV3
Rocol AS Spray

Parking Brake Inner Cable and Pulley Grooves

Midland Silicones MS44 Grease

Refrigeration compressor

Frigidaire 525 Viscosity Oil



Hydraulic Brakes and Automatic Height Control System

BP
BP Hydraulic LHM

Castrol
‡Castrol Hydraulic System Mineral Oil

Mobil
Mobil Fluid LHM

Shell
Shell LHM Fluid (S.8214)

Hydraulic System Mineral (LHM) is also supplied by Esso, Total, Lockheed, Antar,Agig, Cofran, Elf, Igol, Motul, and Stop.

‡First preference

Power Operated Hood Reservoir

BP
BP HLP 22

Castrol
Castrol Hyspin VG22

Esso
Esso Nuto H22

Mobil
Mobil DTE 11
Mobil DTE 13

Shell
Shell Tellus Oil 22
Shell Tellus Oil 23

Section D4

Lubricants

Cars for U.S.A. and Canada from serial number 50 001

†Engine. †Carburetter Dampers, Hand Oiling Points

BP
BP Super Viscostatic 10W/40

Castrol
Castrol GTX

Duckhams
Duckhams 'Q' Motor Oil

Exxon/Imperial
UNIFLO

Mobil
Mobil Super

Shell
Fire and Ice (U.S.A.)
Super Plus (Canada)

†Recommended engine oil grades for cars operating in low temperatures.

For constant operation in ambient temperatures of between 0°C. and -23°C. (32°F. and -10°F.), use a 10W/30 grade oil.

For constant operation in ambient temperatures of -23°C. (-10°F.) and below, use a 5W/20 grade oil

***Torque Converter Transmission, *Steering Pump**

BP
BP Autran DX II

Castrol
Castrol TQ Dexron ®II

Exxon/Imperial
Esso Automatic Transmission Fluid (Dexron II)

Mobil
Mobil ATF 220 (Dexron)

Shell
Shell Donax T6
ATF Dexron

Texaco
Texamatic Fluid 9226 (Dexron II)

*Also approved any Dexron Transmission Fluid

Final Drive Unit, Drive-shaft Ball and Trunnion Joints, Rack and Pinion Steering Unit

BP
BP Gear Oil 90 EP
8P Gear Oil FE 80W/90 EP
BP Gear Oil FE 85W/140 EP

Castrol
Castrol Hypoy 80W/90
Castrol Hypoy CB0W/90

Exxon/Imperial
Exxon Gear Oil GX 80W/90
Exxon Gear Oil GX 85W/140
Exxon Gear Oil GX 90

Mobil
Mobilube HD 90

Shell
Shell Spirax 90 EP

Front and Rear Hubs, Drive-shaft Outer Universal Joints, Propeller Shaft Universal Joints

BP
BP Energrease 2

Castrol
Castrol MP Grease
Castrol LM Grease

Exxon/Imperial
Ronex MP Grease
Esso Unitol

Mobil
Mobilgrease MP

Shell
Shell Darina AX

Height Control Valve Operating Rod Ball Joints, Steering Joints, Parking Brake Linkage Clevis and Fulcrum Pins

Rocol MTS 1000 Grease

Fuel Tank Drain Plug

Rocol MV3
Rocol AS Spray

Printed in England
© Rolls-Royce Motors Limited 1982
April 1982
TSD 4200

Parking Brake Inner Cable and Pulley Grooves

Midlands Silicones MS 44 Grease

Refrigeration Compressor

Frigidaire 525 Viscosity Oil



Hydraulic Brakes and Automatic Height Control System

BP
BP Hydraulic LHM

Castrol
‡Castrol Hydraulic System Mineral Oil

Mobil
Mobil Fluid LHM

Shell
Shell LHM Fluid (S 8214)

Hydraulic System Mineral Oil (LHM) is also supplied by Esso, Total, Lockheed, Antar, Agig, Cofran, Elf, Igol, Motul, and Stop.

‡First preference

Power Operated Hood Reservoir

BP
BP HLP 22

Esso
Esso Nuto H22

Mobil
Mobil DTE 11
Mobil 13

Shell
Shell Tellus Oil 22
Shell Tellus Oil 23

Printed in England

© Rolls-Royce Motors Limited 1981

March 1980

TSD 4200

Chapter E

Engine

Section

E1 Introduction
E2 Specification
E3 Dimensional data
E4 Crankcase and Cylinder liners
E5 Crankshaft and Main bearings
E6 Connecting rods and Pistons
E7 Camshaft and Valve mechanism
E8 Cylinder heads and Valves
E9 Crankcase breather system
E10 Engine lubrication system
E11 Hydraulic systems pumps
E12 Engine removal and installation
E13 Fault diagnosis
E14 Workshop tools

Protection of paintwork

Before commencing work within the engine compartment, always fit new liners RH 2685 to the inside of the wing covers RH 2684 and position them on the front wings of the vehicle.

Chapter E

Issue record sheet 1

August 1982

The dates quoted below refer to the issue date of individual pages within this chapter.

Section	E1	E2	E3	E4	E5	E6	E7	E8	E9	E10	E11	E12
Page No.												
1	Mar 80	Mar 80	Aug 81	Aug 80	Oct 80	Mar 80	Dec 80	Aug 82	Dec 80	Dec 80	Dec 80	Dec 80
2	Mar 80	Mar 80	Aug 81	Aug 80	Oct 80	Mar 80	Dec 80	Aug 82		Dec 80	Dec 80	Dec 80
3			Dec 80	Aug 80	Sep 81	Mar 80	Dec 80	Aug 82		Sep 81		
4			Dec 80		Sep 81	Mar 80	Dec 80	Aug 82		Sep 81		
5			Dec 80		Oct 80	Mar 80	Dec 80			Dec 80		
6			Dec 80		Oct 80	Mar 80	Dec 80					
7			Dec 80		Sep 81	Mar 80	Dec 80					
8			Dec 80		Sep 81	Mar 80	Dec 80					
9												
10												
11												
12												
13												
14												
15												
16												
17												
18												
19												
20												
21												
22												
23												
24												
25												
26												
27												
28												
29												
30												
31												
32												
33												
34												
35												
36												
37												
38												
39												
40												
41												
42												
43												
44												
45												
46												
47												
48												

Printed in England
© Rolls-Royce Motors Limited 1982
T.S.D. 4200

Chapter E

Issue record sheet 2

May 1981

The dates quoted below refer to the issue date of individual pages within this chapter.

Section	E13	E14
Page No.		
1	Oct 80	Dec 80
2	Oct 80	
3		
4		
5		
6		
7		
8		
9		
10		
11		
12		
13		
14		
15		
16		
17		
18		
19		
20		
21		
22		
23		
24		
25		
26		
27		
28		
29		
30		
31		
32		
33		
34		
35		
36		
37		
38		
39		
40		
41		
42		
43		
44		
45		
46		
47		
48		

Printed in England

© Rolls-Royce Motors Limited 1981

Section E1

Introduction

The power unit is an over square, eight cylinder four stroke, designed in a 90° 'Vee' formation. The two banks, each of four cylinders are designated 'A' bank and 'B' bank; 'A' bank of cylinders is 25,40 mm. (1.0 in.) further forward than the cylinders of 'B' bank and is situated on the right-hand side when viewed from the driver's seat.

The engine has a bore of 10,4 cm. (4.1 in.) and a stroke of 9,9 cm. (3.9 in.), giving a total capacity of 6750 cc. (412 cu.in.). The compression ratio is 9:1, 8:1 or 7.3:1 depending upon the specification of the engine.

The crankcase is manufactured from cast aluminium alloy. It is fitted with detachable, full length, wet cylinder liners of centrifugally spun cast iron. Rubber 'O' rings are used at the top and bottom of each liner to 'seal in' engine coolant which is allowed to circulate directly onto and around the centre portion of the liners.

The crankshaft is forged from chrome molybdenum steel which is subsequently nitride hardened.

Five main bearings support the crankshaft. The bearings are split; steel backed shells, lined with an aluminium-tin material; they are retained in position by forged aluminium bearing caps. Crankshaft 'end float' is controlled by thrust washers fitted on each side of the centre main bearing.

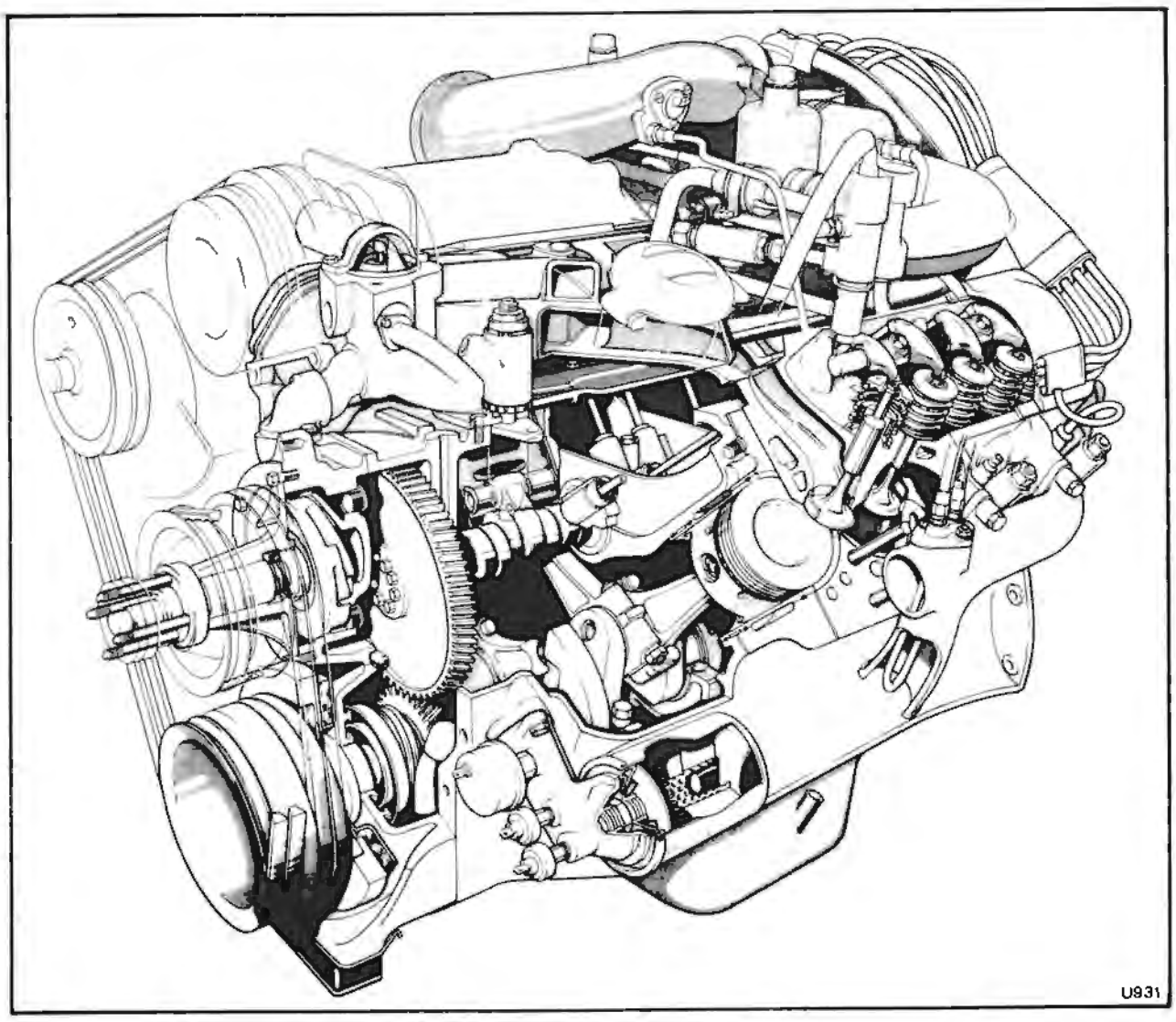

Fig. E1 Cut-away view of engine

Printed in England
© Rolls-Royce Motors Limited 1981

The 'H' section connecting rods and caps are forged from either chrome molybdenum or nickel chrome molybdenum steel. The small end bushes are lead-bronze with a steel backing, the bushes are pressed into the connecting rods. The big-end bearings are split, steel backed shells with an aluminium-tin lining.

The pistons are manufactured from aluminium alloy and are tin plated. They are carried on fully floating, hardened steel gudgeon pins which are slightly off-set from the centre line of the piston towards the thrust face.

Each piston has three rings, two compression rings and an oil control ring.

The two aluminium alloy cylinder heads each have four seperate inlet and exhaust ports. The cylinder heads are fitted with phosphor bronze exhaust valve guides, cast iron inlat valve guides and austenitic steel valve seat inserts.

The exhaust valves are austenitic steel with a stellite tip and valve seat face. The inlet valves are alloy steel with induction hardened tips.

The overhead valve mechanism is operated by push rods, rocker arms and self adjusting hydraulic tappets from a centrally positioned camshaft which is carried directly in bores machined in the crank-case. The hydraulic tappets are carried in det-achable blocks located in the crankcase.

Two eccentrics on the camshaft drive the hydraulic pumps mounted on the tappet cover. These pumps provide the hydraulic pressure for the braking and height control systems.

Engine lubrication is provided by a pressurised system. First stage filteration is accomplished through a fine mesh strainer and pick-up located in the engine oil sump. Oil from the sump strainer passes into a gear type of pump situated at the front of the crankcase. The pump is driven by skew gears from the crankshaft. A relief valve in the oil pump regulates the oil pressure at approximately 2,8 kgf/sq.cm. (40 lbf/sq.in.). Final filteration of the oil is through a disposible 'full flow' filter, prior to its circulation around the engine.

High pressure oil is delivered to the crankshaft, connecting rods, camshaft bearing surfaces, timing gears, tappets, push rods and rocker ball end seatings.

Low pressure oil is fed through the front cam-shaft bearing to the rocker shaft, rocker arms and valve tips. The connecting rod small ends, gudgeon pins and cylinder walls are splash fed with oil from the crankcase.

The engine is cooled by a mixture of anti-freeze and water circulating around the coolant passages. A coolant pump which is mounted at the front of the power unit and belt driven from the crankshaft, circulates the warm coolant around the engine, through the thermostat and then to the radiator where it is cooled.

Modifications were introduced onto the engine in the late part of 1979. Engines incorporating this package have the suffix letter B stamped on the crankcase immediately after the engine number (e.g. SYL 26907B) and are referred to as late engines in this Chapter.

Engine build code number

The engine build code number is stamped on a crankcase boss beneath the rear of the refrigeration compressor. The letters refer to the engine code and the number refers to the engine build sequence. **This is not the engine serial number.**

Section E2

Specification

General	
Type	Over square 90° 'Vee' formation liquid cooled
Number of cylinders	Eight - in two banks of four.
Bore	10,41 cm. (4.10 in.)
Stroke	9,91 cm. (3.90 in.)
Cubic capacity	6,75 litres (411.9 cu.in.) nominal
Compression ratio	9:1, 8:1 or 7.3:1 dependent upon the vehicles specification.
Firing order	A1, B1, A4, B4, B2, A3, B3, A2.
Mounting points	Front - one rubber mount located under the engine below the crankshaft damper and pulley assembly. Rear - two rubber mounts located one on either side of the adapter plate fitted between the engine and the transmission.
Cylinder block	
Type	Monobloc casting
Material	Cast aluminium alloy.
Cylinder liners	
Type	Detachable wet liners
Material	Centrifugally spun cast iron.
Cylinders heads	
Description	Two detachable heads, each having four seperate inlet and exhaust ports.
Material	Aluminium alloy, with phosphor-bronze exhaust valve guides and cast-iron inlet valve guides. Valve seat inserts of austenitic steel.
Crankshaft	
Description	Dynamically balanced, five journal crankshaft with four crankpins (incorporating sludge traps). **Early engines** - bolted-on balance weights. **Late engines** - integral balance weights
Material	Chrome molybdenum steel with nitride hardened journals and crankpins.
Damper	Metalastik rubber vibration damper.
Direction of rotation	Clockwise.
End thrust	Taken on centre main bearing.
Main bearings	
Material	Steel backed shells with a tin-aluminium lining.
Number	Five.
Connecting rods	
Type	'H' section. Forged to size and balanced.
Material	Chrome molybdenum steel.
Big-end bearings	Steel backed shells with a tin-aluminium lining.
Gudgeon pin bushes	Pressed into connecting rod small-end bosses.
Material	Lead-bronze, steel backed.
Gudgeon pins	Fully floating.
Material	EN 32 B.
Pistons	
Type	Cam ground, full skirt design relieved for crankweb clearance. Recessed crown and offset gudgeon pin.
Material	Aluminium alloy - Tin plated.
Rings	Three a) Two compression - internal stepped and manufactured from cast iron. **Early engines and all 7.3:1 C.R. engines** - top ring has chromium plated periphery. **Late engines except 7.3:1 C.R. engines** - top ring molybdenum sprayed on periphery. b) One oil control (Scraper) - top and bottom steel rails have a chromium plated periphery. Equaliser (expander and centre spacer) is manufactured from carbon steel.
Valve gear	
Valves	Overhead push rod operated with seals to control valve stem lubrication. Seat angle 45°.

Printed in England

© Rolls-Royce Motors Limited 1981

March 1980

TSD 4200

Material	
Inlet valve	EN24 with induction hardened tips.
Exhaust valve	KE 965. Stellite tips and valve seats. Valray deposit on top face.
Valve timing	Marks on gears.
Tappets	Self-adjusting hydraulic tappets with spherical base.
Material	Chill cast-iron.
Push rods	Ball-ended tubes.
Material	Copper plated bundy tube.

Camshaft

Material	Chill cast-iron.
Cams	5' to 7' longitudinal taper.
Number of journals	Four.
Bearings	Runs direct in crankcase.
Thrust taken	On front end.
Drive	Through helical tooth gears.
Material	Crankshaft gear - steel Camshaft gear - aluminium.

Lubrication system

General	High pressure oil feed to crankshaft, connecting rods, camshaft bearings, tappets, push rods and rocker ball end seatings and camshaft timing gears. Intermittent oil feed through the front camshaft bearing to rocker shaft, rocker arms and valve tips. Splash feed to connecting rod small-ends, gudgeon pins and cylinder walls.
Type	Pressurised wet-sump system.
High pressure supply	2,81 kgf/sq.cm. (40 lbf/sq.in.) at 2000 r.p.m.
Relief valve	2,81 kgf/sq.cm. (40 lbf/sq.in.)
Sump capacity	8,4 litres (14.75 Imp pints, 17.75 U.S. pints) when not renewing oil filter. 9,4 litres (16.50 Imp pints, 20 U.S. pints) when renewing oil filter. **Always check the oil level by means of the dipstick.**
Oil pump	Helical gear type with fine mesh strainer pick-up.
Drive	By gears from crankshaft.
Oil filter	Full flow, disposable canister type.

Associated systems

Fuel systems	Refer to Chapter K or Chapter U.
Cooling system	Refer to Chapter L.
Exhaust system	Refer to Chapter Q.
Ignition system	Refer to Chapter M or Chapter U.

Section E3

Dimensional data

Description	Dimension	Permissible worn dimensions	Remarks
Crankcase and Cylinders			
Cylinder liner bore grading	S. 10,4150 cm. to 10,4164 cm. (4.10040 in. to 4.10095 in.) T. 10,4164 cm. to 10,4178 cm. (4.10095 in. to 4.10150 in.) X. 10,4181 cm. to 10,4191 cm. (4.1016 in. to 4.1020 in.)	0,1016 mm. (0.004 in.) wear	If these measurements are exceeded a new assembly of liner and piston must be fitted
Cylinder liner 'nip'	0,051 mm. to 0,076 mm. (0.002 in. to 0.003 in.)		New liners must be selectively fitted or ground on the end to give this dimension
Pistons			
Piston grading	S. 10,4102 cm. to 10,4115 cm. (4.0985 in. to 4.0990 in.) T. 10,4115 cm. to 10,4130 cm. (4.0990 in. to 4.0996 in.) X. 10,4130 cm. to 10,4148 cm. (4.0996 in. to 4.1003 in.)		Piston clearance in the bore 0,03429 mm. to 0,06223 mm. (0.00135 in. to 0.00245 in.) measured between 33,325 mm. and 39,700 mm. (1.312 in. and 1.563 in.) from the bottom of the skirt across the thrust axis.
Compression ring groove widths	2,049 mm. to 2,075 mm. (0.0807 in. to 0.0817 in.)		
Compression ring widths	1,973 mm. to 1,998 mm. (0.0777 in. to 0.0787 in.)		The rings should be assembled with staggered gaps
Clearance	0,051 mm. to 0,1016 mm. (0.002 in. to 0.004 in.)	0,127 mm. (0.005 in.)	
Compression rings closed gap	0,33 mm. to 0,64 mm. (0.013 in. to 0.025 in.)		
Scraper ring groove width	4,000 mm. to 4,025 mm. (0.1575 in. to 0.1585 in.)		
Scraper ring closed gap	0,381 mm. to 1,143 mm. (0.015 in. to 0.045 in.)		

Printed in England
© Rolls-Royce Motors Limited 1981
August 1981
TSD 4200

Description	Dimension	Permissible worn dimensions	Remarks
Gudgeon pins			
Bore diameter in piston	2,5408 cm. to 2,5410 cm. (1.0003 in. to 1.0004 in.) Green 2,5410 cm. to 2,5413 cm. (1.0004 in. to 1.0005 in.) Red		Colour code marked on the underside of the piston boss
Gudgeon pin diameter	2,5402 cm. to 2,5405 cm. (1.0001 in. to 1.0002 in.) Green 2,5405 cm. to 2,5407 cm. (1.0002 in. to 1.0003 in.) Red		Colour code marked on the end of the gudgeon pin
Clearance in boss	0,0025 mm. to 0,0076 mm. (0.0001 in. to 0.0003 in.)		
Crankshaft and Connecting rods			
Connecting rod small-end bush internal diameter	2,5408 cm. to 2,5413 cm. (1.0003 in. to 1.0005 in.)		
Gudgeon pin clearance in small-end bush	Size to 0,0101 mm. (Size to 0.0004 in.)		At room temp. 20°C. to 22.2°C. (68°F. to 72°F.)
Big-end bearing housing, internal diameter	6,0833 cm. to 6,0846 cm. (2.395 in. to 2.3955 in.)		This diameter should be checked with the big-end bolts in position and the nuts torque tightened to 4,8 kgf.m. (35 lbf.ft.)
Big-end bearing shell, internal diameter	5,71627 cm. to 5,71881 cm (2.2505 in. to 2.2515 in.)		
Crankpin diameter	5,71119 cm to 5,71246 cm. (2.2485 in. to 2.249 in.)	5,70865 cm. (2.2475 in.)	
Clearance	0,0381 mm. to 0,0762 mm (0.0015 in. to 0.003 in.)	0,1016 mm. (0.004 in.)	Clearance measured vertically.
Small-end bush housing, internal diameter	2,8956 cm. to 2,89687 cm. (1.140 in. to 1.1405 in.)		
Connecting rod twist	Maximum of 0,03 mm. per 10 00 mm. in length (0.003 in. per inch)		
Connecting rod vertical alignment	Maximum of 0,01 mm. per 10,00 mm. in length (0.001 in. per inch)		
Connecting rod and cap bolt holes diameter for location	9,525 mm. to 9,538 mm. (0.375 in to 0.3755 in.)		On location diameter

Description	Dimension	Permissible worn dimensions	Remarks
Crankshaft and Connecting rods continued			
Connecting rod bolt diameter for location	9,512 mm. to 9,525 mm. (0.3745 in. to 0.375 in.)		On location diameter
Clearance	Size to 0,0254 mm. (Size to 0.001 in.)		
Connecting rod bolt interference on knurled diameter	Size to 0,175 mm. (Size to 0.0069 in.)		Bolts should not be removed from rods unless they are to be renewed
Connecting rod end-float	0,203 mm. to 0,432 mm. (0.008 in. to 0.017 in.)		Controlled by clearance between rods and crankpin end faces
Main bearing diametral clearance	0,028 mm. to 0.066 mm. (0.0011 in. to 0.0026 in.)	0,0889 mm. (0.0035 in.)	
Crankshaft end-float	0,1016 mm. to 0,25 mm. (0.004 in. to 0.010 in.)	0,31 mm. (0.012 in.)	
Connecting rod bolt stretch			Refer to Section E6
Crankshaft bow		0,25 mm. (0.010 in.)	Regrind crankshaft if this figure is exceeded
Crankshaft journals and crankpins ovality		0.025 mm. (0.001 in.)	Regrind crankshaft if this figure is exceeded.

Crankshaft size	Crankshaft journal	Main shell bearing
Early engines Crankshaft grinding dimensions		
Standard	6,35 cm. - 0,0127 mm. (2.500 in. - 0.0005 in.)	6,35254 cm.+ 0,0254 mm. (2.501 in.+ 0.001 in.)
0,254 mm. undersize (0.010 in. undersize)	6,3246 cm. - 0,0127 mm. (2.490 in. - 0.0005 in.)	6,32714 cm.+ 0,0254 mm. (2.491 in.+ 0.001 in.)
0,508 mm. undersize (0.020 in. undersize)	6,299 cm. - 0,0127 mm. (2.480 in. - 0.0005 in.)	6,30174 cm.+ 0,0254 mm. (2.481 in.+ 0.001 in.)
Late engines Crankshaft grinding dimensions		
Standard	6,70 cm. - 0,0127 mm. (2.6378 in. - 0.0005 in.)	6,7025 cm.+ 0,0254 mm. (2.6388 in.+ 0.001 in.)
0,254 mm. undersize (0.010 in. undersize)	6,6746 cm. - 0,0127 mm. (2.6278 in. - 0.0005 in.)	6,6771 cm.+ 0,0254 mm. (2.6288 in.+ 0.001 in.)
0,508 mm. undersize (0.020 in. undersize)	6,6492 cm. - 0,0127 mm. (2.6178 in. - 0.0005 in.)	6,6517 cm.+ 0,0254 mm. (2.6188 in.+ 0.001 in.)

Printed in England
© Rolls-Royce Motors Limited 1981
December 1980
TSD 4200

Crankshaft size	Crankpin	Big-end bearing
Crankshaft grinding dimensions Standard	5,7125 cm. - 0,0127 mm. (2.249 in. - 0.0005 in.)	5,7163 cm.+ 0,0254 mm. (2.2505 in.+ 0.001 in.)
0,254 mm. undersize (0.010 in. undersize)	5,6871 cm. - 0,0127 mm. (2.239 in. - 0.0005 in.)	5,6909 cm.+ 0,0254 mm. (2.2405 in.+ 0.001 in.)
0,508 mm. undersize (0.020 in. undersize)	5,6617 cm. - 0,0127 mm. (2.229 in. - 0.0005 in.)	5,6655 cm.+ 0,0254 mm. (2.2305 in.+ 0.001 in.)

Description	Dimension	Permissible worn dimensions	Remarks
Main bearing housings			
Bore diameter	**Early engines** 6,7704 cm. to 6,77164 cm. (2.6655 in. to 2.6660 in.) **Late engines** 7,2987 cm. to 7,2999 cm. (2.8735 in. to 2.8740 in.)		This diameter should be checked with the main bearing caps in position and the retaining nuts tightened to the following **Early engines** 6,2 kgf.m. to 6,9 kgf.m. (45 lbf.ft. to 50 lbf.ft) **Late engines** 8,0 kgf.m. to 8,5 kgf.m. (58 lbf.ft. to 62 lbf.ft.)
Main bearing cap			
Width of cap	12,955 cm. to 12,957 cm. (5.1005 in. to 5.1010 in.)		
Crankcase location gap	12,954 cm. to 12,957 cm. (5.1000 in. to 5.1010 in.)		
Fit - Interference Clearance	0,0254 mm. (0.001 in.) 0,0127 mm. (0.0005 in.)		
Valve gear			
Camshaft timing gear backlash	0,0254 mm. to 0,1143 mm. (0.001 in. to 0.0045 in.)	0,152 mm. (0.006 in.)	
Camshaft gear face run-out	0,000 mm. to 0,051 mm. (0.000 in. to 0.002 in.)		
Camshaft end-float	0,051 mm. to 0,152 mm. (0.002 in. to 0.006 in.)		
Camshaft journal diameter	5,0737 cm. to 5,0749 cm. (1.9975 in. to 1.998 in.)	5,07111 cm. (1.9965 in.)	
Camshaft bearing bore	5,08 cm. to 5,0813 cm. (2.000 in. to 2.0005 in.)	5,0851 cm. (2.002 in.)	
Camshaft journal clearance	0,0508 mm. to 0,0762 mm. (0.002 in. to 0.003 in.)	0,1016 mm. (0.004 in.)	

Description	Dimension	Permissible worn dimensions	Remarks
Valve gear - continued			
Cam base circle (inlet and exhaust)	3,727 cm. to 3,739 cm. (1.467 in. to 1.472 in.)	3,701 cm. (1.457 in.)	Dimensions apply on centre line of cam at the small end
Height of cam (inlet and exhaust)	4,37 cm. (1.72 in.)		
Tappet block bore diameter			
Colour code white	22,981 mm. to 22,987 mm. (0.90475 in. to 0.9050 in.)		Groove(s) etched onto the top face of tappet barrel. Tappets marked with one groove should be used with tappet block bores colour coded white and tappets marked with two grooves should be used with tappet block bores colour coded red
Colour code red	22,987 mm. to 22,993 mm. (0.9050 in. to 0.90525 in.)		
Tappet external diameter			
One groove	22,962 mm. to 22,968 mm. (0.9040 in. to 0.90425 in.)		
Two grooves	22,968 mm. to 22,974 mm. (0.90425 in. to 0.9045 in.)		
Clearance	0,0127 mm. to 0,0254 mm. (0.0005 in. to 0.001 in.)	0,0381 mm. (0.0015 in.)	
Exhaust valve guide - external diameter	15,9385 mm. to 15,9512 mm. (0.6275 in. to 0.628 in.)		Standard Blue +0,051 mm. (0.002 in.) Green +0,127 mm. (0.005 in.) Yellow +0,254 mm. (0.010 in.)
Cylinder head bore diameter for exhaust valve guide	15,875 mm. to 15,9004 mm. (0.625 in. to 0.626 in.)		
Interference in head	0,0381 mm. to 0,0762 mm. (0.0015 in. to 0.003 in.)		
Exhaust valve guide - internal diameter	9,525 mm. to 9,54 mm. (0.375 in. to 0.3755 in.)	9,588 mm. (0.3775 in.)	Finish reamed after fitting. 'Bellmouth' at the lower end is permissible up to 0,1524 mm. (0.006 in.) for a depth of 9,4615 mm. (0.3725 in.)
Exhaust valve stem diameter	9,492 mm. to 9,499 mm. (0.37375 in. to 0.374 in.)	9,468 mm. (0.37275 in.)	
Clearance	0,025 mm. to 0,044 mm. (0.001 in. to 0.00175 in.)	0,089 mm. (0.0035 in.)	

Printed in England
© Rolls-Royce Motors Limited 1981
December 1980
TSD 4200

Description	Dimension	Permissible worn dimensions	Remarks
Valve gear continued			
Exhaust valve spring compressed to 4,470 cm. (1.725 in.)	39,009 kgf. to 42,676 kgf. (86 lbf. to 94 lbf.)	36,287 kgf. (80 lbf.)	
Exhaust and inlet valve seat angle	45°		'Crown' with 30°cutter to avoid pocketing after re-grinding seat
Exhaust valve seat insert - external diameter	4,4552 cm. to 4,4564 cm. (1.7540 in. to 1.7545 in.)		Standard Green +0,127 mm. (0.005 in.) Yellow +0,254 mm. (0.010 in.) Blue +0,381 mm. (0.015 in.)
Cylinder head bore diameter for exhaust seat insert	4,445 cm. to 4,4475 cm. (1.750 in. to 1.751 in.)		
Interference	0,0762 mm. to 0,1143 mm. (0.003 in. to 0.0045 in.)		
Inlet valve seat insert - external diameter	5,1536 cm. to 5,1549 cm. (2.0290 in. to 2.0295 in.)		Standard Green +0,127 mm. (0.005 in.) Yellow +0,254 mm. (0.010 in.) Blue +0,381 mm. (0.015 in.)
Cylinder head bore diameter for inlet seat	5,1435 cm. to 5,1460 cm. (2.025 in. to 2.026 in.)		
Interference	0,0762 mm. to 0,1143 mm. (0.003 in. to 0.0045 in.)		
Inlet valve guide - external diameter	15,9385 mm. to 15,9512 mm. (0.6275 in. to 0.628 in.)		Standard Blue +0,051 mm. (0.002 in. Green +0,127 mm. (0.005 in.) Yellow +0,254 mm. (0.010 in.)
Cylinder head bore diameter for inlet valve guide	15,875 mm. to 15,90 mm. (0.625 in. to 0.626 in.)		
Interference in head	0,0381 mm. to 0,0762 mm. (0.0015 in. to 0.003 in.)		
Inlet valve guide - internal diameter	9,525 mm. to 9,54 mm. (0.375 in. to 0.3755 in.)	9,588 mm. (0.3775 in.)	Finish reamed after fitting

Description	Dimension	Permissible worn dimensions	Remarks
Valve gear continued			
Inlet valve stem diameter	9,492 mm. to 9,499 mm. (0.37375 in. to 0.374 in.)	9,468 mm. (0.37275 in.)	
Clearance	0,025 mm. to 0,044 mm. (0.001 in. to 0.00175 in.)	0,089 mm. (0.0035 in.)	
Inlet valve spring compressed to 4,064 cm. (1.600 in.)	37,195 kgf. to 40,823 kgf. (82 lbf. to 90 lbf.)	32,205 kgf. (71 lbf.)	
Gland spring compressed to 1,27 cm. (0.5 in.)	10,9 kgf. to 13,17 kgf. (24 lbf. to 29 lbf.)	9,08 kgf. (20 lbf.)	
Exhaust valve - overall length	12,410 cm. to 12,435 cm. (4.886 in. to 4.896 in.)		
Inlet valve - overall length	12,489 cm. to 12,529 cm. (4.917 in. to 4.933 in.)		
Distributor gear backlash	0,0508 mm. to 0,2032 mm. (0.002 in. to 0.008 in.)	0,2286 mm. (0.009 in.)	
Rocker bore diameter	19,031 mm. to 19,044 mm. (0.74925 in. to 0.74975 in.)	19,075 mm. (0.751 in.)	
Rocker shaft diameter	19,006 mm. to 19,012 mm. (0.74825 in. to 0.7485 in.)		
Clearance	0,0191 mm. to 0,0331 mm. (0.00075 in. to 0.0015 in.)	0,089 mm. (0.0035 in.)	
Hydraulic brake pump push rod lift	13,26 mm. to 13,33 mm. (0.522 in. to 0.525 in.)		This measurement is taken from the top face of the mounting flange to the top of the push rod (see Fig. E49)
Hydraulic brake pump shim sizes	0,0762 mm. (0.003 in.) 0,1778 mm. (0.007 in.)		
Oil pump			
Driving shaft diameter	12,675 mm. to 12,687 mm. (0.4990 in. to 0.4995 in.)	12,624 mm. (0.4970 in.)	
Shaft bore diameter	12,70 mm. to 12,713 mm. (0.500 in. to 0.5005 in.)		
Shaft clearance in casing bore	0,0127 mm. to 0,038 mm. (0.0005 in. to 0.0015 in.)	0,076 mm. (0.003 in.)	
Stationary spindle diameter	12,675 mm. to 12,687 mm. (0.499 in. to 0.4995 in.)	12,637 mm. (0.4975 in.)	

Printed in England
© Rolls-Royce Motors Limited 1981
December 1980
TSD 4200

Description	Dimension	Permissible worn dimensions	Remarks
Oil pump continued			
Driven gear internal diameter	12,70 mm. to 12,713 mm (0.500 in. to 0.5005 in.)	12,738 mm. (0.5015 in.)	
Clearance on spindle	0,0127 mm. to 0,038 mm. (0.0005 in. to 0.0015 in.)	0,076 mm. (0.003 in.)	Permissible only when the radial clearance of the gears in the case exceeds this figure
Diametrical clearance between gears and side of chamber	0,0508 mm. to 0,089 mm. (0.002 in. to 0.0035 in.)	0,152 mm. (0.006 in.)	
Pump gears - backlash	0,0762 mm. to 0,1778 mm. (0.003 in. to 0.007 in.)	0,2159 mm. (0.0085 in.)	
Pump gears - end-float	0,0254 mm. to 0,1016 mm. (0.001 in. to 0.004 in.)	0,127 mm. (0.005 in.)	
Drive gear backlash	0,0254 mm. to 0,2032 mm. (0.001 in. to 0.008 in.)	0,305 mm. (0.012 in.)	
Drive gear end-float	0,0254 mm. to 0,1016 mm. (0.001 in. to 0.004 in.)	0,127 mm. (0.005 in.)	

Section E4

Crankcase and Cylinder liners

The crankcase and cylinders form a monobloc casting of aluminium alloy that carries 'wet-type' cylinder liners.

The centrifugally spun cast iron liners are sealed by a single rubber 'O' ring at the top and by two rubber 'O' rings at the bottom (see Fig. E3).

The main bearing caps are an aluminium forging and have an interference fit in the crankcase of up to 0,0254 mm. (0.001 in.).

The camshaft runs in bores machined directly in the crankcase.

Each cast iron tappet block is located by two dowels fitted into the crankcase. One of the locating holes in the tappet block is elongated and forms a slot to allow for the different rates of expansion between the two metals.

The bores of the tappet blocks are graded into two sizes and colour coded either white or red.

Some setscrew holes are fitted with helicoil inserts and the threads in the crankcase into which these inserts screw are non-standard sizes, therefore, setscrews should not be fitted until the helicoils have been correctly installed.

Studs screw directly into the crankcase, their threads having an interference fit of up to 0,0508 mm. (0.002 in.).

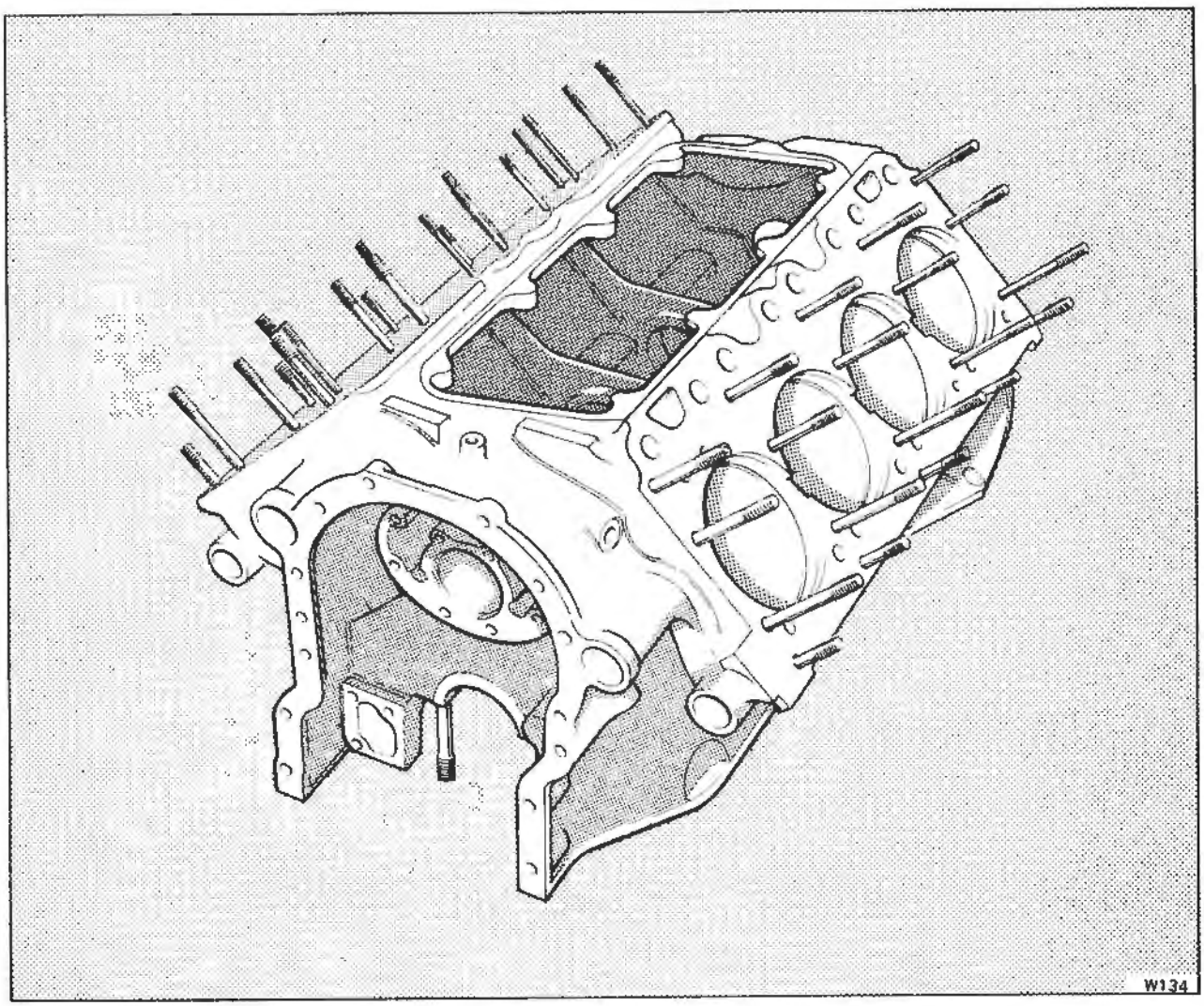

Fig. E2 Crankcase

Printed in England

© Rolls-Royce Motors Limited 1981

August 1980

TSD 4200

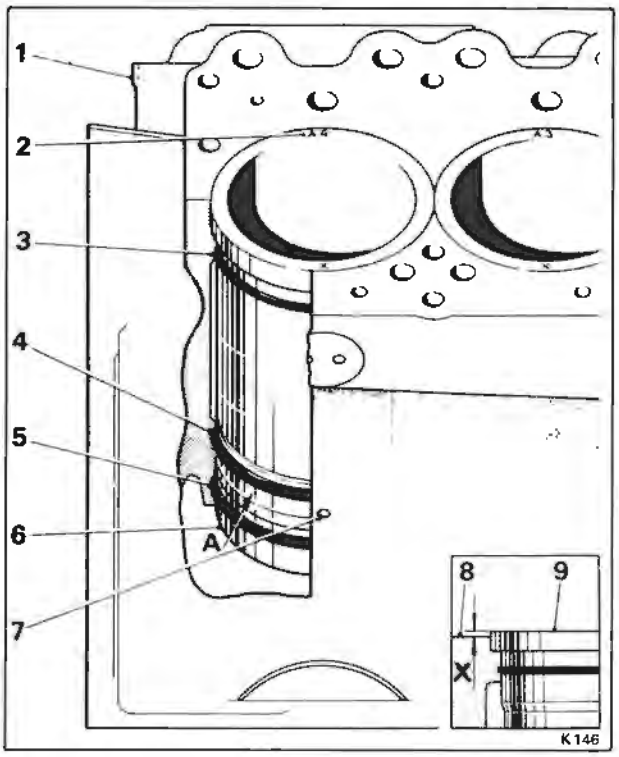

Fig. E3 Cylinder liner in position

1 Crankcase
2 Bore reference number
3 Rubber 'O' ring
4 Upper sealing ring
5 Lower sealing ring
6 Cylinder liner
7 Tell-tale hole (8 off)
8 Crankcase
9 Cylinder liner
A Position of corrosion build-up on cylinder liner and crankcase
X Cylinder liner nip

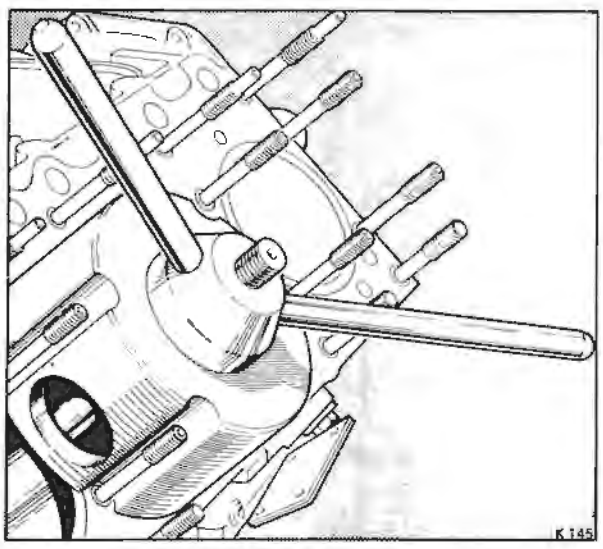

Fig. E4 Cylinder liner extraction

Cylinder liners and seals

The cylinder bore dimensions should only be checked with all the liners from any one bank in position. Any deviation from this rule could result in false readings.

From the measurements taken of the cylinder bore calculate the wear and ovality. If the figures exceed those quoted in Section E3, Dimensional data, a new liner (with new sealing rings) and piston assembly should be fitted.

Cylinder liner seal leakage can be detected by 'tell-tale' holes in the side of the crankcase.

If engine coolant issues from the 'tell-tale' hole the upper of the two bottom rings is leaking; if oil issues from the 'tell-tale' hole, the lower sealing ring is leaking. In either case, the appropriate liner should be removed and new sealing rings fitted into the crankcase (see Fig. E3).

It is most important when replacing cylinder liners that only one liner is removed at any one time. If this procedure is not adopted and a liner is extracted from a bore where the adjacent liners have been removed, it is possible for the crankcase bridge piece to sustain damage.

The damage is caused by a build-up of corrosion which forms on the liner immediately below the upper of the two bottom sealing rings (see Fig. E3). As the liner is withdrawn,the deposit has to pass under the sealing ring thus exerting an abnormally high bursting pressure. If the build-up of the corrosion is thick enough it can cause the rubber ring to twist and the bridge piece to fracture.

Cylinder liner - To remove

If a cylinder liner is suspect and the engine has been in service for only a short time, it may be possible to remove and fit one liner with the crankcase remaining in the vehicle (i.e. the crankcase in a cold condition).

1. Remove and dismantle the engine as necessary.
2. Using the cylinder liner extraction tool (RH 7095) as shown in Figure E4, withdraw the liner from the top face of the crankcase.

Cylinder liner - To fit

1. Ensure that the coolant drain hole in the crankcase wall is clean and unobstructed.
2. Ensure that the seal leakage 'tell-tale' holes in the crankcase wall are clean and unobstructed.
3. Inspect the cylinder liner, the liner location bore in the crankcase and the crankcase counterbore. Remove any burrs and thoroughly clean the parts (particularly the mating faces) with 'Genklene' or a similar alternative.

Meticulous care should be taken when carrying out these operations. Any dirt or burrs allowed to remain will have an adverse affect on the fit of the liner in the crankcase and may distort the liner bore.

4. When a cylinder liner is fitted into the crankcase it should stand proud of the crankcase top face by the amount stated in Section E3, Dimensional data. This is to provide a 'nip' when the cylinder head and gasket are fitted.

To obtain the correct 'nip' carry out Operations 5 to 8 inclusive (see Fig. E3).

5. Measure the depth of the cylinder liner collar and also that of the counterbore in the crankcase.

6. Subtract the counterbore measurement from the collar measurement to obtain the 'nip' figure.

7. If the figure obtained does not correspond with the figure quoted in Section E3, either

(a) grind the excess metal off the top face of the liner (always clean the liner after grinding).

(b) or try another liner.

8. Before fitting a cylinder liner into a crankcase always ensure that the bore number is etched onto the top face as shown in Figure E3. Other information which should be etched onto the top of the liner includes the piston grade letter and on a very limited number of engines the letters O/L adjacent to the piston grade.

The letters O/L refer to oversize liners (outside diameter) and these liners may be fitted to some reconditioned engines. These engines are identified by an SR number suffixed by the letter O/L stamped on a small boss situated at the front of the crankcase.

9. Fit three new rubber sealing rings into the crankcase. Thinly smear the rings and location diameters with Palmolive grease or its equivalent.

10. Place the crankcase into an oven having an approximate temperature of 150°C. (302°F.). Allow the crankcase to remain in the oven until it has attained oven temperature.

11. Remove the crankcase from the oven and then quickly push the liner into the crankcase bore until it seats correctly in the bottom of the counterbore. Ensure that the cylinder bore reference etched on the top face of the liner is positioned at the top (i.e. nearest point to the camshaft) as shown in Figure E3.

12. Allow the crankcase to return to its cold condition.

13. Using a depth micrometer, measure the amount that the liner stands proud above the crankcase face (refer to Section E3, Dimensional data).

14. If the liner stands proud of the crankcase by more than the specified limits, an even tap around the top face of the liner is permissible, using a plastic-headed mallet.

15. Should the liner either remain in excess of the stand proud limit or be below the limit, the liner should be withdrawn and the cause investigated.

Printed in England
© Rolls-Royce Motors Limited 1981
August 1980
TSD 4200

Section E5

Crankshaft and Main bearings

The crankshaft is forged from chrome molybdenum steel. There are five main journals and four crankpins, each crankpin carries two connecting rods. The main journals and crankpins run in split, steel backed shell bearings that have a tin-aluminium lining.

The crankpins are drilled and plugged to form sludge traps that prevent dirt from reaching the bearings.

To improve the wear characteristics, the crankshaft is nitride hardened.

Crankshaft end float is controlled by split thrust washers fitted on either side of the centre main bearing assembly.

Bolted-on balance weights are fitted to the crank-shaft (late engines have integral balance weights) which is dynamically balanced before it is fitted to the engine. When the engine is partially built the crankshaft, connecting rods and pistons are dynamically balanced in the crankcase.

Oil flingers are fitted to the front and rear (except late engines) of the crankshaft to prevent oil leakage. The rear oil flinger is pressed onto the shaft and rotates inside a recess on the rear end backplate (on late engines the rear flinger is superseded by a 'lip' type of oil seal) as shown in Figure E6. At the front of the crankshaft there are two oil flingers that rotate inside recesses machined in the front half lower casing (on late engines a 'lip' type of oil seal is fitted).

It is important that the position of any component removed from the engine is noted so that it can be returned to its original position, otherwise, wear characteristics and engine balance may be impaired.

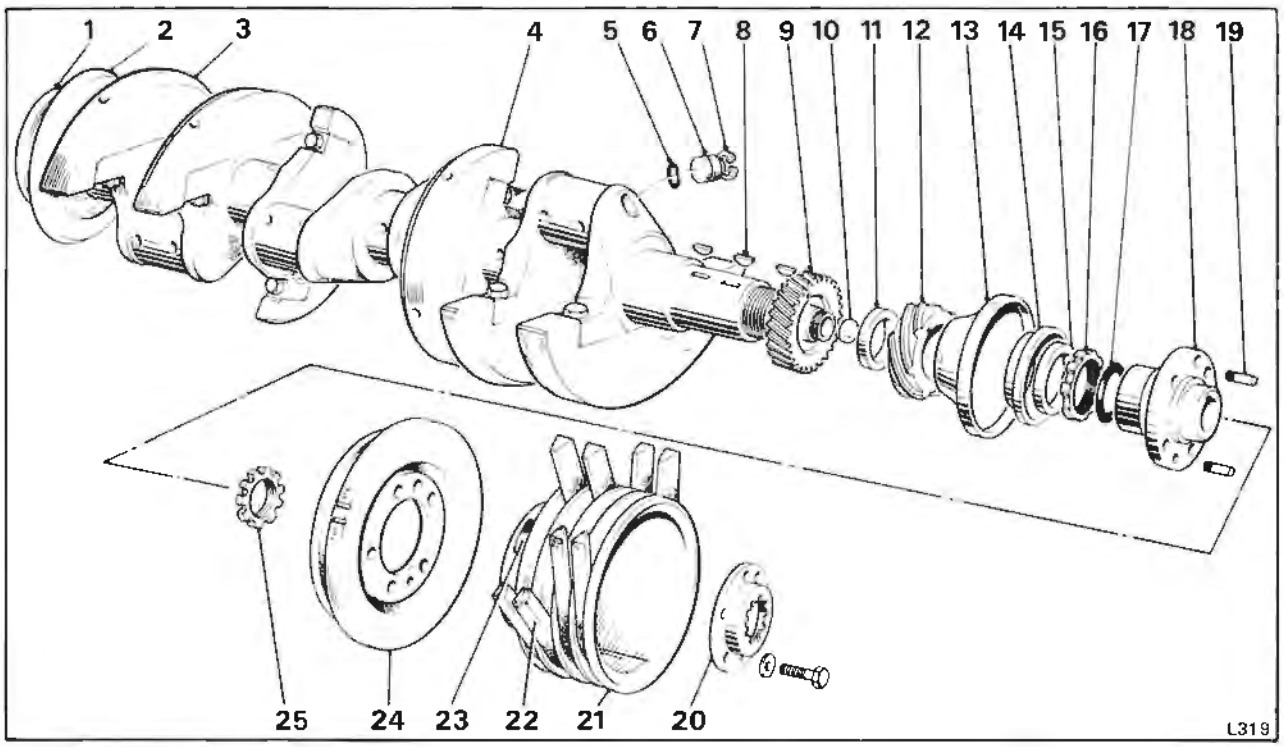

Fig. E5 Crankshaft assembly

1 Rear adapter	6 Plug	11 Washer	16 Nut	21 Pulley
2 Flinger	7 Circlip	12 Oil pump driving gear	17 Rubber 'O' ring	22 Belt
3 Bolted-on balance weight	8 Woodruff key	13 Flinger	18 Driving flange	23 Balance weight
4 Bolted-on balance weight	9 Timing gear	14 Flinger	19 Dowel	24 Damper
5 'O' ring	10 Disc	15 Washer	20 Lock-plate	25 Nut

Printed in England
© Rolls-Royce Motors Limited 1981
October 1980
TSD 4200

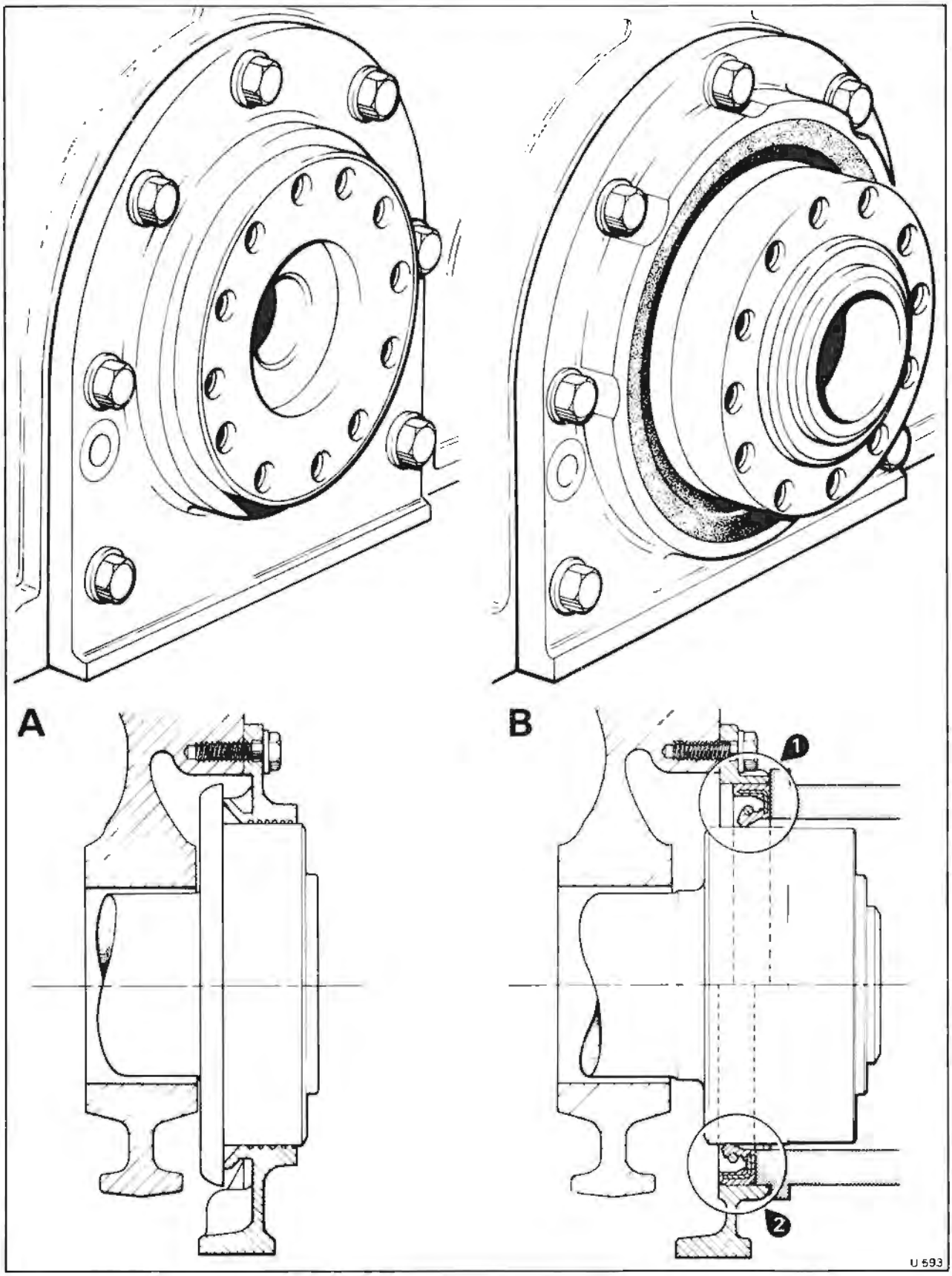

Fig. E6 Crankshaft rear seal arrangement
1 Initial position of seal
2 Service position of seal
A Oil flinger and backplate
B Oil seal and backplate (late engines)

Printed in England
© Rolls-Royce Motors Limited 1981
September 1981
TSD 4200

Crankshaft - To remove

1. Remove the engine from the vehicle (see Section E12).
2. Fit the engine to a turnover stand.
3. Ensure that the engine oil has been drained.
4. Turn the engine upside down.
5. Unscrew the retaining setscrews and withdraw the sump. Discard the gasket.
6. Unscrew the four setscrews and withdraw the oil pedestal and strainer assembly.
7. Remove the coolant pump (see Chapter L).
8. Locate the lock-plate situated in the centre of the crankshaft pulley.
9. Unscrew the five setscrews and withdraw the lock-plate.
10. Using the special spanner (RH 7131) unscrew the serrated nut from the crankshaft.
11. Withdraw the pulley and damper.
12. Using an extractor (RH 7097) withdraw the pulley driving flange.
13. Ensure that all weight is removed from the engine front mounting foot.
14. Remove the setscrews from the engine mountings situated below the timing cover.
15. Unscrew the jockey pulley pivot pin, the two dowel setscrews (bottom left and top right), the two other corner setscrews (top left and bottom right) and the remaining centre setscrews.
16. Carefully withdraw the lower timing cover (the cover is dowelled to the crankcase), ensuring that the rubber bung situated inside the casing is not lost.
17. Unscrew the three setscrews retaining the oil pump and withdraw the assembly and dowel inserts together with the pipe and rubber 'O' ring.
18. Locate the flywheel setscrews.
19. Unscrew the setscrews securing the flywheel to the crankshaft.
20. Withdraw the flywheel assembly and adapter [on late engines the adapter is an integral part of the crankshaft (see Fig. E6)].
21. Unscrew the setscrews and withdraw the back-plate. The backplate is dowelled to the crankcase. Discard the gasket.
22. Unscrew the nuts from the connecting rod bolts, remove the connecting rod caps.
23. Fit protective rubber tubing over the connecting rod bolts to prevent damage to the crankpins (see Fig. E17).
24. Remove the shell bearings from both the connecting rod and cap.
25. Push the piston and connecting rod assemblies to the top of their respective bores.
26. Unscrew the main bearing cap nuts and withdraw the caps using the extractor (RH 7208) and attachment (RH 7498) as shown in Figure E7.
27. Remove the crankshaft thrust washers from the centre main bearing.
28. Fit protective rubber tubing over the main bearing studs to prevent damage to the crankshaft journals.
29. Carefully lift the crankshaft from the crankcase.

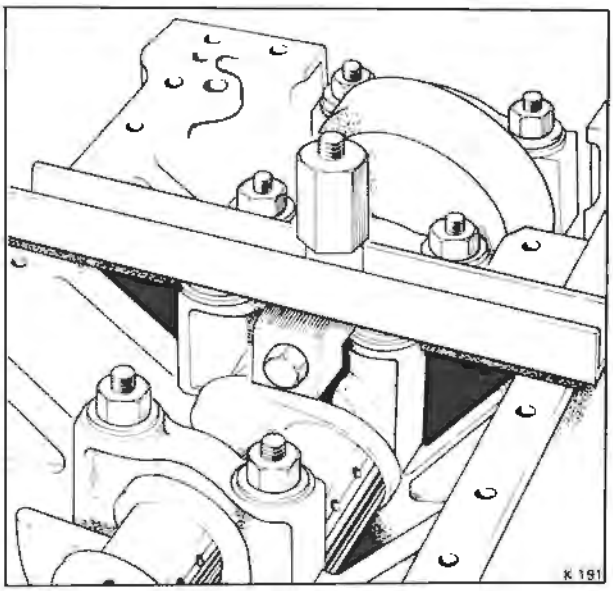

Fig. E7 Removing the main bearing caps

Crankshaft - To dismantle

1. Using the special spanner (RH 7110) unscrew and remove the serrated nut and washer from the front of the crankshaft (the nut has a left-hand thread).
2. Withdraw the oil flingers (early engines).
3. Ensure that the front face of the oil pump drive gear is identified (so that the gear can be fitted in its original position when assembling the crankshaft).
Withdraw the oil pump driving gear.
4. Using a soft drift, remove the Woodruff key.
5. Withdraw the spacer.
6. Withdraw the timing gear and Woodruff key.
7. Dismantle the sludge traps by removing the retaining circlip and withdrawing the plug.
The seal plugs can be removed with the aid of a setscrew screwed into the extraction hole, leverage then applied to the end of the setscrew will withdraw the plug.
Discard the rubber 'O' ring from around each plug.
8. Unscrew the two setscrews securing each balance weight and withdraw the weight (late engines have integral balance weights).
Bolted-on balance weights need not normally be removed unless the crankshaft requires regrinding when they should be removed to allow access to the various pins and journals.

Crankshaft - To inspect

1. Thoroughly clean the crankshaft. This can usually be achieved by washing the shaft in a paraffin bath then drying it with compressed air. A set of small brushes may be useful to remove obstinate dirt.
2. Mount the crankshaft in 'Vee' blocks on an inspection table.

Measurement	Method
Mean size 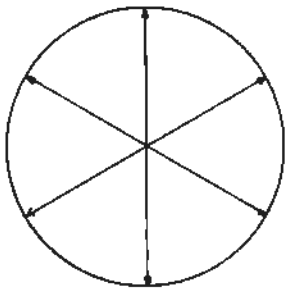	**Obtained on crankshaft main journal, crankpins and bearing shells** 1. (a) Measure the diameter of the journal or crankpin in two planes one at right angles to the other. (b) Ensure that the shell bearings are fitted in position and the retaining nuts correctly tightened. Measure the bore of the bearing in three places as shown. 2. Add the two journal or crankpin readings together (three readings for shell bearings) and divide by two (three for shell bearings).
Bearing clearance 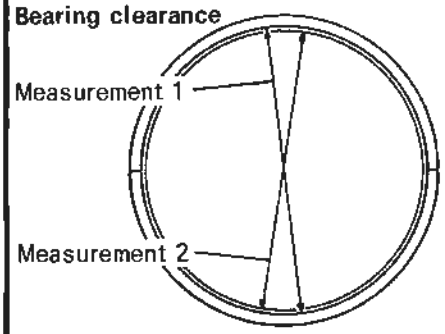	**Obtained between crankshaft main journals/crankpins and bearing shells** 1. Obtain mean size of shell bearing. 2. Obtain mean size of crankshaft main journal/crankpin. 3. Subtract measurement obtained in 2 from measurement obtained in 1 to give bearing clearance.
Bow 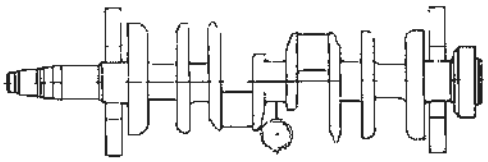	**Measured on the crankshaft centre main journal** 1. Mount the crankshaft main journals 1 and 5 in 'Vee' blocks on a surface table. 2. Position the indicator gauge on the side of the centre main journal. 3. Rotate the shaft until the lowest reading is obtained on the gauge. Zero the gauge. 4. Rotate the shaft 180° and note the reading on the gauge. 5. Divide the reading by two to obtain the crankshaft bow.
Ovality 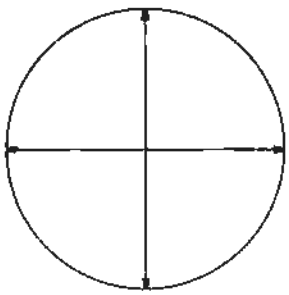	**Measured on the crankshaft main journals and crankpins** 1. Measure across the centre of the journal or crankpin in two planes one at right angles to the other. 2. Subtract the smaller reading from the larger reading to give the ovality.
Parallelism (Taper) 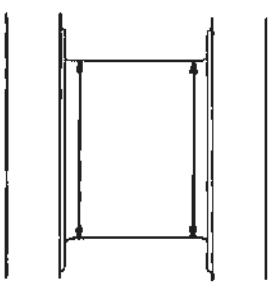	**Measured on the crankshaft main journals and crankpins** 1. Measure the diameter at both ends of the journal or crankpin, ensure that the measurements are taken on the same plane. 2. Subtract the smaller reading from the larger reading to give the taper.

W541

Fig. E8 Method of measuring the crankshaft

3. Using a micrometer check the crankshaft journals and crankpins for size, ovality, parrallelism and bow (see Fig. E8). Refer to Section E3, Dimensional data, for the service dimensions. If necessary, regrind the crankshaft.
4. Inspect the taper on the front of the crankshaft for wear and damage.

If the taper shows obvious signs of wear or damage, a replacement crankshaft should be fitted.
5. Inspect the Woodruff keys and keyways for wear. Oversize keys are available. However, if wear is apparent with the largest size Woodruff keys installed, a replacement crankshaft should be fitted.

Crankshaft - To regrind

1. The crankshaft should be reground when wear or ovality exceeds 0,025 mm. (0.001 in.), when the crankpins and journals are heavily scored or when the bow in the crankshaft exceeds 0,25 mm.(0.010 in.).
2. Replacement bearings are available in the following sizes, standard, minus 0,25 mm. (0.010 in.) and minus 0,50 mm. (0.020 in.).
3. The crankpins and journals should be ground and lapped to suit the nearest undersize bearing. (See Section E3 - Dimensional data).
4. When grinding, use a stone having a grit and grade equivalent to a NORTON A 46 NV or one grade softer. **A harder stone must not be used.**
5. For 'plunge' grinding, the width of the stone must be 0,51 mm. (0.020 in.) **less** than the dimension between the journal or crankpin end faces and the machine must be fitted with hydraulic stops. For traverse grinding a suitable width of stone should be selected (see Fig. E9).
6. Care must be taken to ensure that no sharp edges are left in the radii where the grinding wheel traverse ends and the radii of the grinding wheel must be carefully controlled to ensure that the grinding fades out not more that half-way up the radius on the crankshaft.

On no account must the grinding wheel touch the side faces of the crankpin or journal.

7. Lubrication must be continuous during re-grinding and the lubricant should be fed liberally

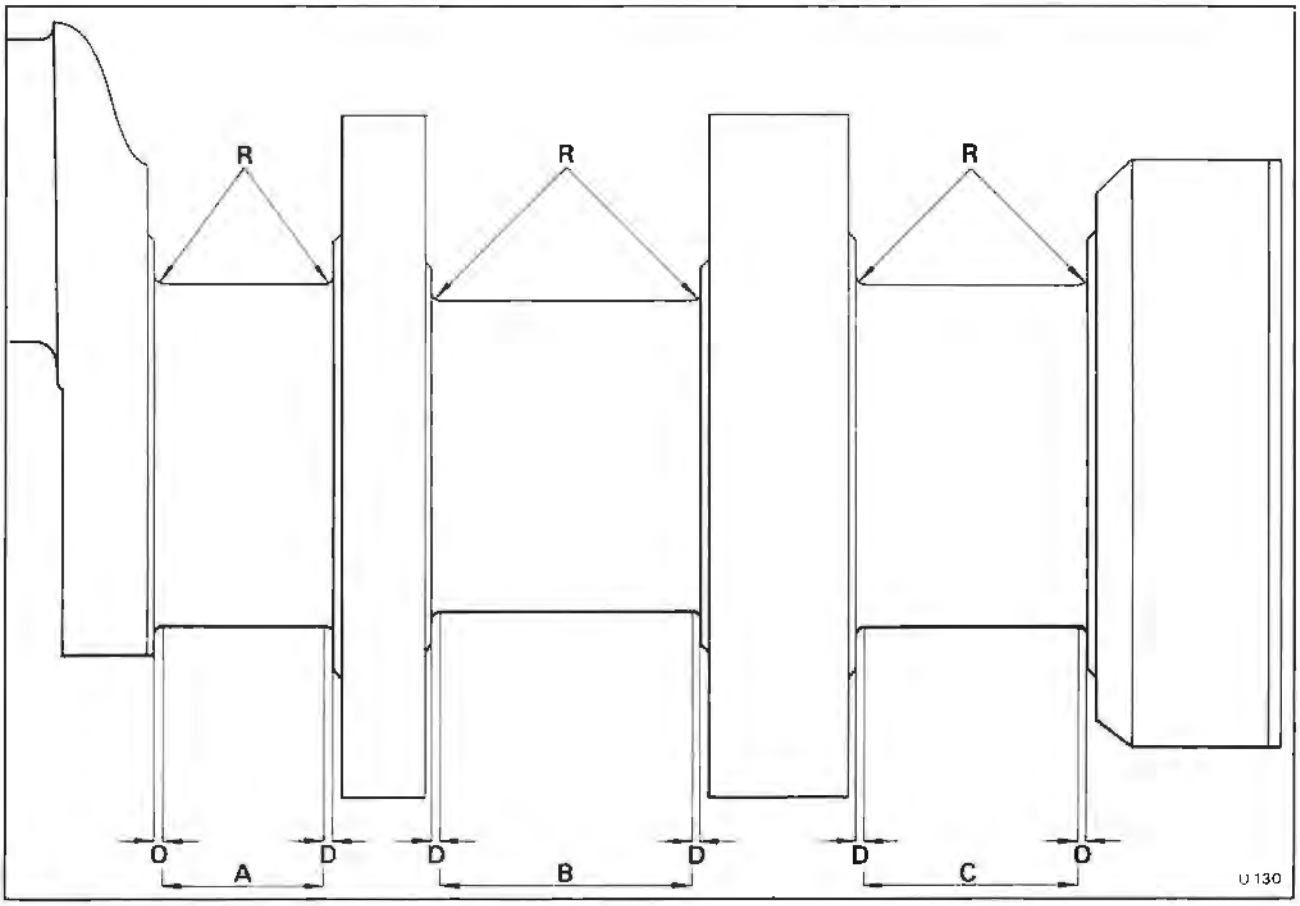

Fig. E9 Crankpin and journal grinding dimensions

A 32,97 mm. (1.298 in.) Grinding wheel travel - journals 2, 3 and 4
B 50,29 mm. (1.980 in.) Grinding wheel travel - crankpins
C 42,67 mm. (1.680 in.) Grinding wheel travel - journal 5.
D 0,254 mm. (0.010 in.) Minimum distance - side face to grinding wheel.
R 2,362 mm. to 2,108 mm. (0.093 in. to 0.083 in.) Radius.

Printed in England
© Rolls-Royce Motors Limited 1981
October 1980
TSD 4200

onto the ingoing side of the grinding wheel. The grinding wheel must not be allowed to contact the journal or crankpin until the shaft is thoroughly wet. Any approved lubricant can be used.

8. Grind the crankpins and journals until they are 0,025 mm. (0.001 in.) larger than the required finished size. This will allow for lapping and polishing.

9. Crankshafts must be re-hardened by the nitriding process after each re-grind.

10. After hardening, test the hardness of the journals and crankpins. The minimum acceptance figure for the hardened crankshaft is 570 VPN/30 kg. using a Vickers Diamond Pyramid Machine.

11. After grinding and if the necessary equipment is available, the shaft should be magnetically crack tested. It should then be lapped and polished to the finished size.

Crankshaft - To lap

1. The crankshaft journals and crankpins should be lapped to produce a perfectly smooth finish after grinding and hardening.

2. Cast iron laps should be used and the machine set to run at between 220 r.p.m. and 250 r.p.m.

3. The lapping compound should consist of a mixture of grade M 303½ grit and vegetable oil in proportion of 1,134 kg. (2.5 lb.) of grit to 4,546

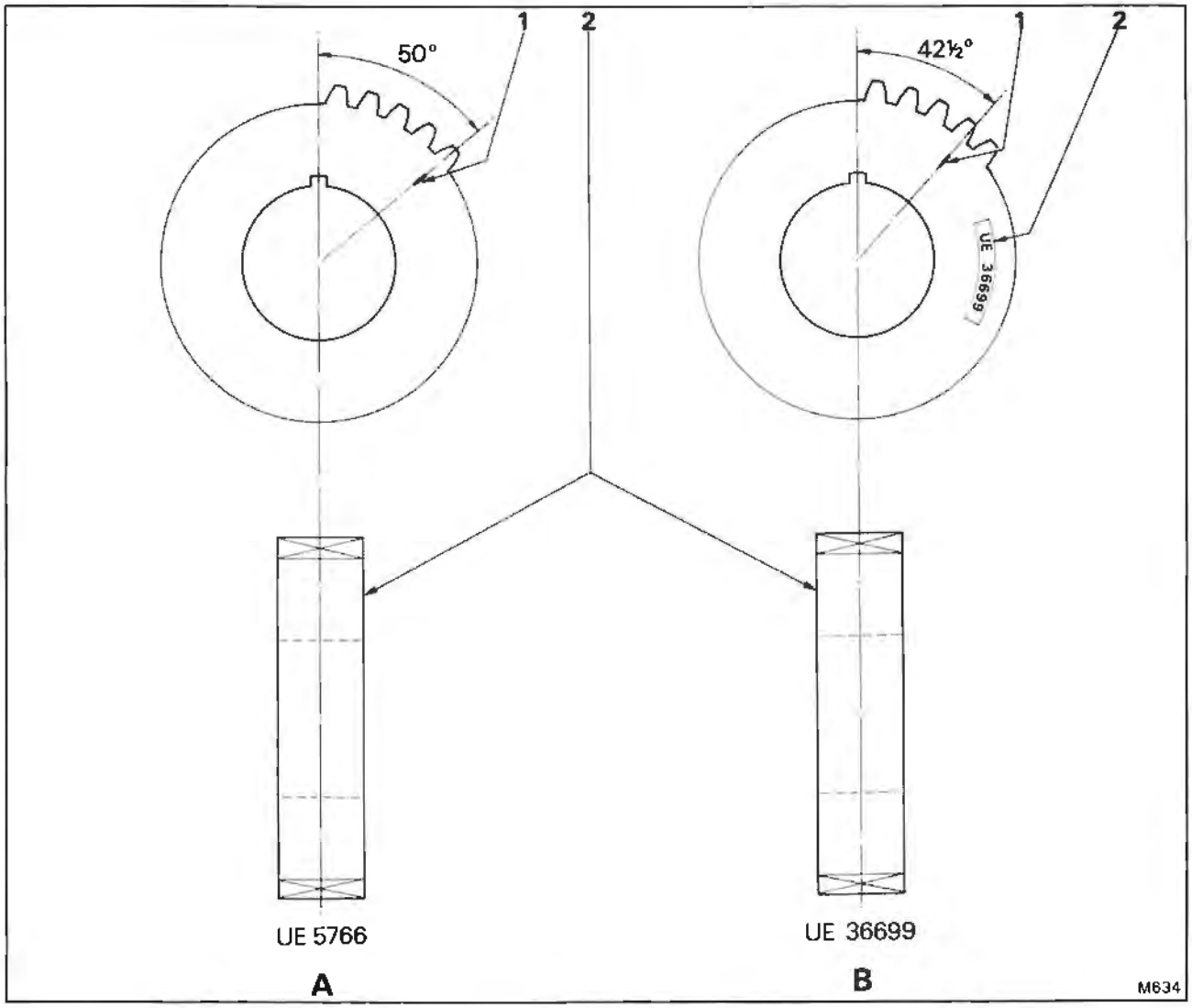

Fig. E10 Identification of timing gears

1 Timing mark
2 Position of part number
A Silver Shadow, T series, Corniche (U.S.A. and Canada) Camargue (U.S.A. and Canada)
B Corniche (other than U.S.A. and Canada) Camargue (other than U.S.A. and Canada)

— Early engines

B All late engines

— Late engines

litres (1 gallon) of the oil. The compound must be mixed to a smooth consistency and injected into the laps at frequent intervals.

4. The crankpins and journals must be lapped paralled to within 0,010 mm. (0.0004 in.). Whilst lapping, the size of the crankpins and journals should be checked frequently; allowances must be made for the slight contraction which will take place as the shaft cools.

5. After lapping, wash the shaft thoroughly in a high pressure paraffin wash; blow off any surplus paraffin with compressed air and dry the shaft with a soft lint free cloth.

6. When the shaft is dry, polish the crankpins and journals with Corolite 320 grade abrasive tape 2,5 cm. (1 in.) wide liberally lubricated with vegetable oil.

7. After polishing, again wash the shaft and repeat the cleaning procedure.

Crankshaft - To assemble

1. Ensure that the threads of the balance weight bolts and the tapped holes in the crankshaft are clean.

2. Fit each balance weight to the crankshaft using two setscrews.

Important. It is essential that the balance weights are fitted to their original position, otherwise, the balance of the shaft will be impaired.

The word 'front' stamped onto each balance weight must face towards the front of the engine.

3. Ensure that each balance weight seats correctly and that the retaining setscrews are tightened to the torque figures quoted in Chapter P.

4. Fit new rubber sealing rings to the sludge trap plugs, then smear engine oil onto the rings.

5. Push each plug firmly home and fit the circlip into its groove; pull the plug outwards to meet the circlip face.

6. Fit the Woodruff key to the crankshaft then fit the timing gear.

Two types of crankshaft timing gear will be encountered in service and it is most important that the correct gear is fitted (see Fig. E10).

Ensure that the timing gear locates correctly onto the Woodruff key.

7. Fit the spacer.

8. Fit the second Woodruff key to the crankshaft, then fit the oil pump drive gear. Ensure that the gear is fitted with the front face towards the front of the crankshaft.

If a new gear is fitted, the mating gear on the oil pump should also be replaced.

Ensure that the oil pump drive gear locates correctly on the Woodruff key.

9. Fit the oil flingers (early engines).

10. Fit the washer and serrated nut.

Important. Always fit a new serrated nut. The nut has a left-hand thread.

11. Using special box spanner (RH 7110) torque tighten the serrated nut to the figures quoted in Chapter P.

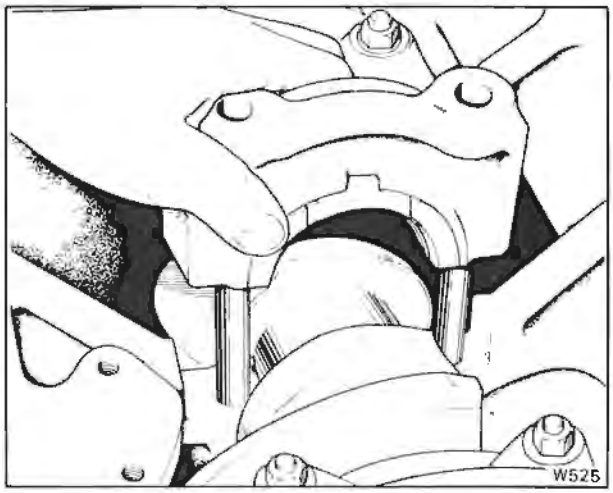

Fig. E11 Fitting the centre main bearing cap

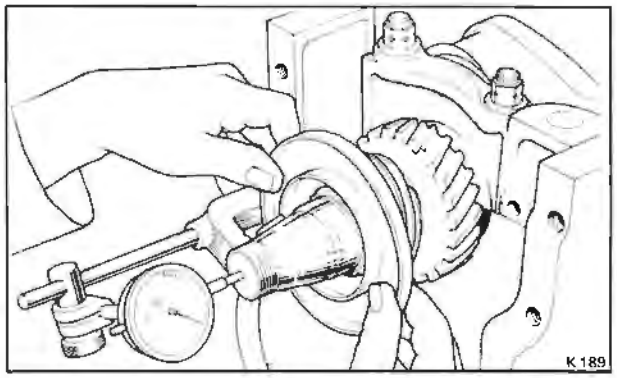

Fig. E12 Checking the crankshaft end-float

The crankshaft should be held firm whilst tightening the serrated nut. **This can be accomplished by fitting two long setscrews in the rear end of the crankshaft and inserting a bar between them. The force needed to tighten the serrated nut can be offset by levering on the bar.**

Crankshaft - To fit

1. Ensure that the bearing shells are the correct size for the journals and crankpins.

2. Ensure that all parts are clean. A lint-free cloth should be used for wiping all parts.

3. Position the upper bearing shells in the crankcase and lightly smear them with clean engine oil.

4. Place the crankshaft in position noting that the marks on the crankshaft and camshaft timing gears align (see Section E7). Fit the upper halves of the thrust washer to the centre main bearing.

5. Fit the main bearing caps and shells together with the two lower thrust washers for the centre main bearing (see Fig. E11). When fitting the bearing caps it may be necessary to tap them lightly into position. If this is done ensure that the bearing shells are not dislodged. The cap nuts should be torque tightened to the figure quoted in Chapter P.

6. Check that the crankshaft rotates freely.

Printed in England
© Rolls-Royce Motors Limited 1981
September 1981
TSD 4200

7. Check the crankshaft end - float (see Fig. E12 and Section E3, Dimensional data).
8. Fit the bearing shells to the connecting rods and caps, then lightly smear the shells with clean oil.
9. Locate the lowest crankpin (the engine will be inverted therefore, this will be the crankpin that is uppermost).
10. Pull the two connecting rods upwards and position the big-ends around the crankpin.
11. Remove the protective rubber sleeve from each bolt.
12. Assemble the connecting rod big-ends (see Section E6).
13. Fit the oil pump and oil filter delivery pipe, using new rubber 'O' rings.
14. Fit the oil strainer pick-up and pedestal (see Fig. E13).
15. Assemble the front of the engine, fitting the lower front cover, coolant pump assembly, coolant pump pulley, alternator and refrigeration compressor.

Fit a new Neoprene seal between the lower front cover and the coolant pump.

16. Fit a new rubber 'O' ring to the crankshaft.
17. Fit the driving flange.
18. Fit the damper and crankshaft pulley.
19. Fit the serrated nut and torque tighten to the figure given in Chapter P, using the special spanner (RH 7131).
20. Check that the lock-plate aligns with the five setscrew holes. If necessary, further tighten the serrated nut to align the setscrew holes.

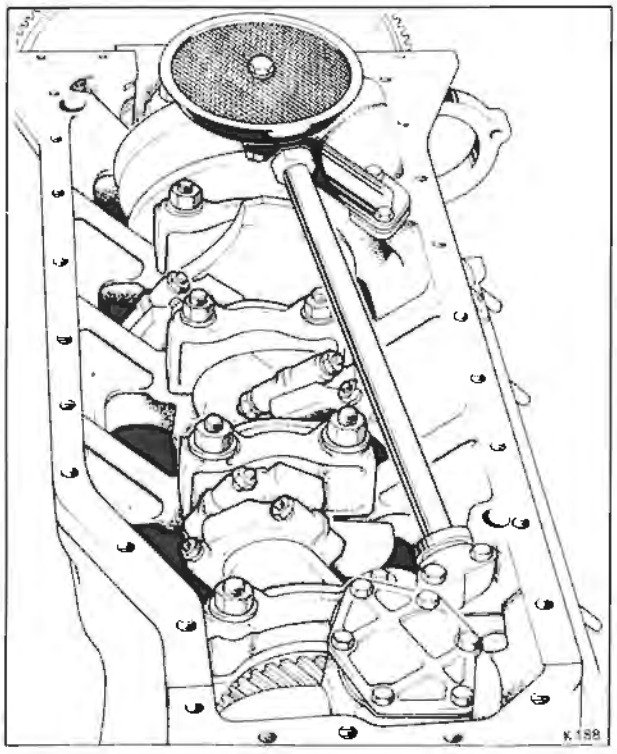

Fig. E13 View with the sump removed

21. Fit the setscrews and torque tighten them to the figures given in Chapter P.
22. Fit the driving belts, ensuring that they are correctly tightened (see Chapter L).
23. Fit the engine backplate and flywheel assembly.
24. Visually inspect the big-end and main bearings (see Fig. E13) and fit the engine sump, using a new gasket.
25. Fit the dipstick.
26. Fit the engine into the engine compartment (see Section E12).

Crankshaft damper - To remove

1. Carry out the usual Workshop safety precautions.
2. Slacken the driving belts.
3. Remove the five setscrews and the locking plate from the crankshaft pulley.
4. Withdraw the pulley and the damper.

Crankshaft damper - To fit

To fit the damper, reverse the procedure given for its removal, noting the following.
1. The damper and crankshaft pulley can only be fitted one way due to the positioning of the locating dowels.
2. Fit the setscrews and torque tighten them to the figures given in Chapter P.
3. Fit the driving belts and tension them as described in Chapter L.

Crankshaft backplate seal - To remove and fit

Late engines have a lip type seal fitted into the engine backplate (see Fig. E6, illustration B).

To renew the seal proceed as follows.
1. Remove the transmission (see Chapter T).
2. Remove the setscrews securing the flywheel and withdraw the assembly from the rear of the crankshaft.
3. Locate the engine backplate and unscrew the retaining setscrews. Collect the washers and withdraw the backplate. The backplate is dowelled to the crankcase.
4. Discard the crankcase gasket.
5. Using a hammer and drift carefully tap the seal out of the rear of the housing.
6. Fit the new seal by reversing the removal procedure noting that the special seal insertion tool (RH 9646) should be used to position the seal in the backplate. Figure E6, item 1 shows the initial position of the seal and item 2 shows the seal fitted in an alternative position.
7. Fit a new gasket to the crankcase.
8. Liberally oil the crankshaft and seal.
9. Ensure that the seal protection sleeve (RH 9655) is clean and liberally oiled. Fit the sleeve onto the crankshaft.
10. Fit the backplate assembly over the sleeve and secure in position with the setscrews and washers.
11. Carefully withdraw the seal protection sleeve.

Section E6

Connecting rods and Pistons

Connecting rods

The connecting rods (see Fig. E14) are 'H' section forgings of either chrome molybdenum or low nickel chrome molybdenum steel. They are accurately balanced before fitting to the engine by machining excess metal from the balance pad on the large end and from the boss on the small end.

Drillings in the crankshaft webs carry oil from the main bearings to the big-end journals, for the lubrication of the big-end bearings. Oil splash and mist collecting under the crown of the piston falls onto the connecting rod small-end boss and then passes through a recessed drilling in the boss and hole in the bush, to provide lubrication for the gudgeon pin and small-end bush.

The detachable big-end bearings are split steel backed shells, copper-lead lined with a lead-tin overlay or lead-bronze lined with either a lead-indium or a reticular aluminium tin overlay.

The small-end bush which is pressed into the small-end boss, is split and has a steel backing lined with lead-bronze. After being pressed into the small-end boss, the bush is reamed out to the final diameter.

Pistons

The pistons are manufactured from 12% silicon aluminium alloy. They are cam ground to provide an ideal bearing surface that will maintain an adequate oil film and minimise the possibility of 'scuffing' under adverse operating conditions. The pistons are finally tin-plated to a depth of 0,0076 mm. (0.0003 in.).

Each piston has three rings (two compression and one oil control), a gudgeon pin that is off-set from the centre line of the piston and a full skirt which is shaped to allow for clearance with the crankshaft web.

The top piston ring is an internally stepped type of compression ring and manufactured from cast-iron. Dependent upon the engine specification the periphery of this top ring is either chromium plate for a minimum depth of 0,152 mm. (0.006 in.) or molybdenum sprayed for a depth of 0,10 mm. (0.004 in.). This provides the ring with a hard wear resistant face.

The second ring is basically a compression ring although it does combine these duties with that of an auxiliary oil scraper ring. This ring is 'internally stepped' and manufactured from cast iron. It is granolite treated to provide additional lubrication for the ring during the initial running-in period.

The oil control (scraper) ring comprises top and bottom steel rails that are chromium plate on the periphery to a minimum depth of 0,125 mm. (0.005 in.). The equaliser (expander and centre spacer) is manufactured from carbon steel.

Further details of the piston rings are given in Figure E15.

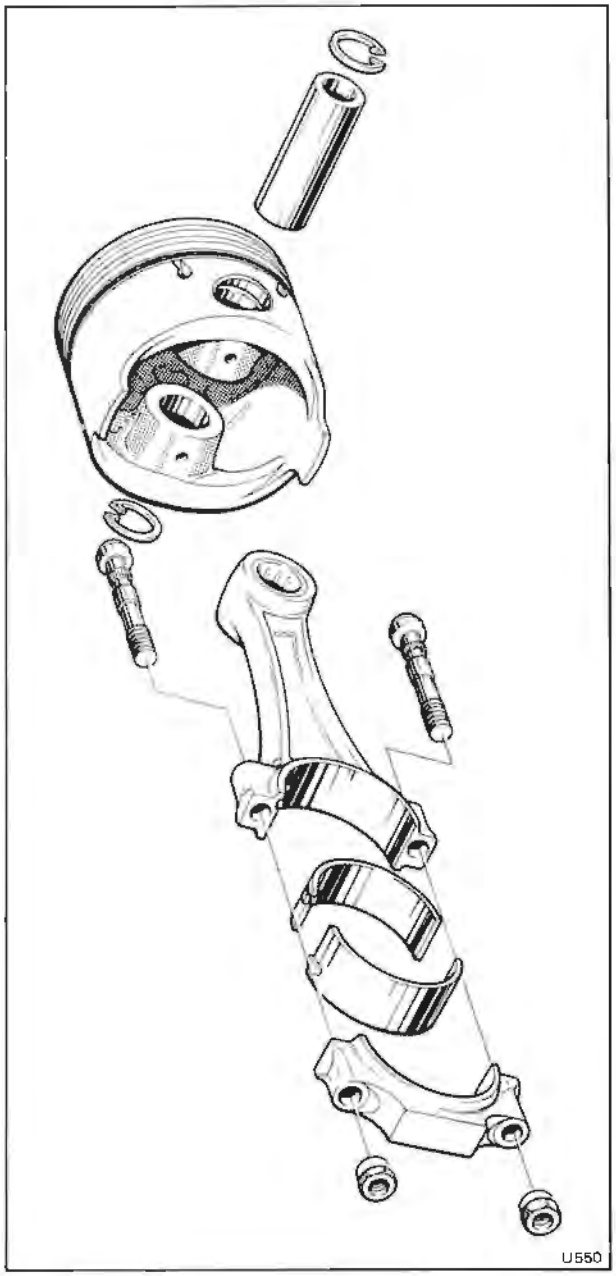

Fig. E14 Connecting rod and piston

Printed in England
© Rolls-Royce Motors Limited 1981
March 1980
TSD 4200

Compression ratio

	Australia, Canada, Japan and the U.S.A.	All other countries
*Early engines	7.3:1	8:1
*Late engines	8:1 (California with fuel injection) 7.3:1	9:1 (S.U. HIF7 carburetters) 8:1 (Solex 4 A1 carburetter)

Pistons

Compression ratio	Piston	Remarks
7.3:1	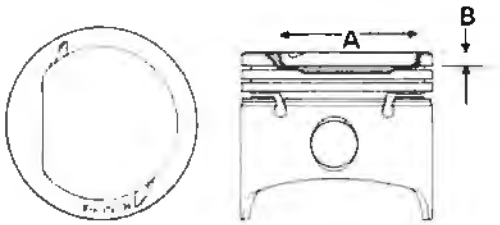	A 83,19 mm. (3.275 in.) B 6,48 mm. (0.255 in.)
8:1	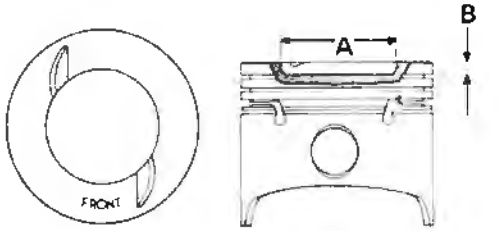	A 62,23 mm. (2.45 in.) B 6,48 mm. (0.255 in.)
9:1	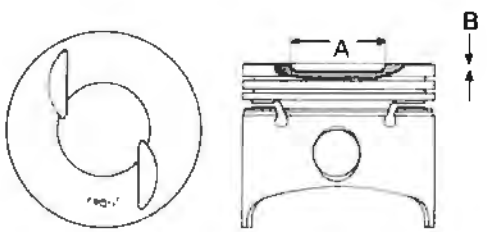	A 50,80 mm. (2.00 in.) B 3,61 mm. (0.142 in.)

Piston rings

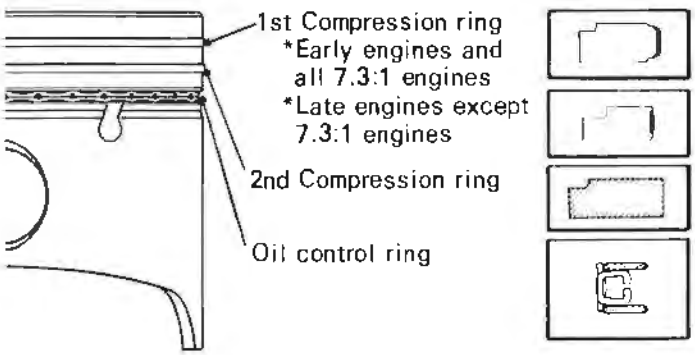

Edge of ring chromium plated to a depth of 0,152 mm. (0.006 in.) min.

Edge of ring molybdenum sprayed to a depth of 0,10 mm. (0.004 in.) min.

Produced from cast iron and Granolite treated

Steel rails chromium plated to a depth of 0,125 mm.(0.005 in.) min.
Centre equaliser produced from high carbon steel

Note Compression ratio is changed by the shape of the piston crown
*Refer to Section E1 Introduction for identification of engines

U552

Fig. E15 Details of pistons

Compression ratio
Early engines have a compression ratio of either 8:1 or 7.3:1. Late engines have compression ratios of either 9:1, 8:1 or 7.3:1 dependent upon specification. The compression ratio is determined by the type of pistons. All pistons have recessed crowns and the shape and size of the recess determines the compression ratio of the engine. Details of the compression ratios are given in Figure E15.

To maintain valve to piston clearances shaped depressions are machined in the piston crowns. Machining two depressions enables the pistons to be initially used in either 'A' bank or 'B' bank. The only exceptions are the 7.3:1 pistons which due to the special shape of their piston crown recess are handed and can only be used in the bank of cylinders for which they are designed. The cylinder number is stamped on top of the piston.

Gudgeon pin
The piston is carried on the connecting rod by a gudgeon pin. This pin is fully floating when the engine is running under normal conditions.

Two Seeger circlips are used to retain the gudgeon pin (see Fig. E14).

The gudgeon pin is case hardened to a depth of between 0,254 mm. and 0,508 mm. (0.010 in.and 0.020 in.).

Connecting rod bearings - To remove
The big-end bearing can be renewed whilst the engine is fitted in the car. To undertake this exercise, carry out the usual workshop safety

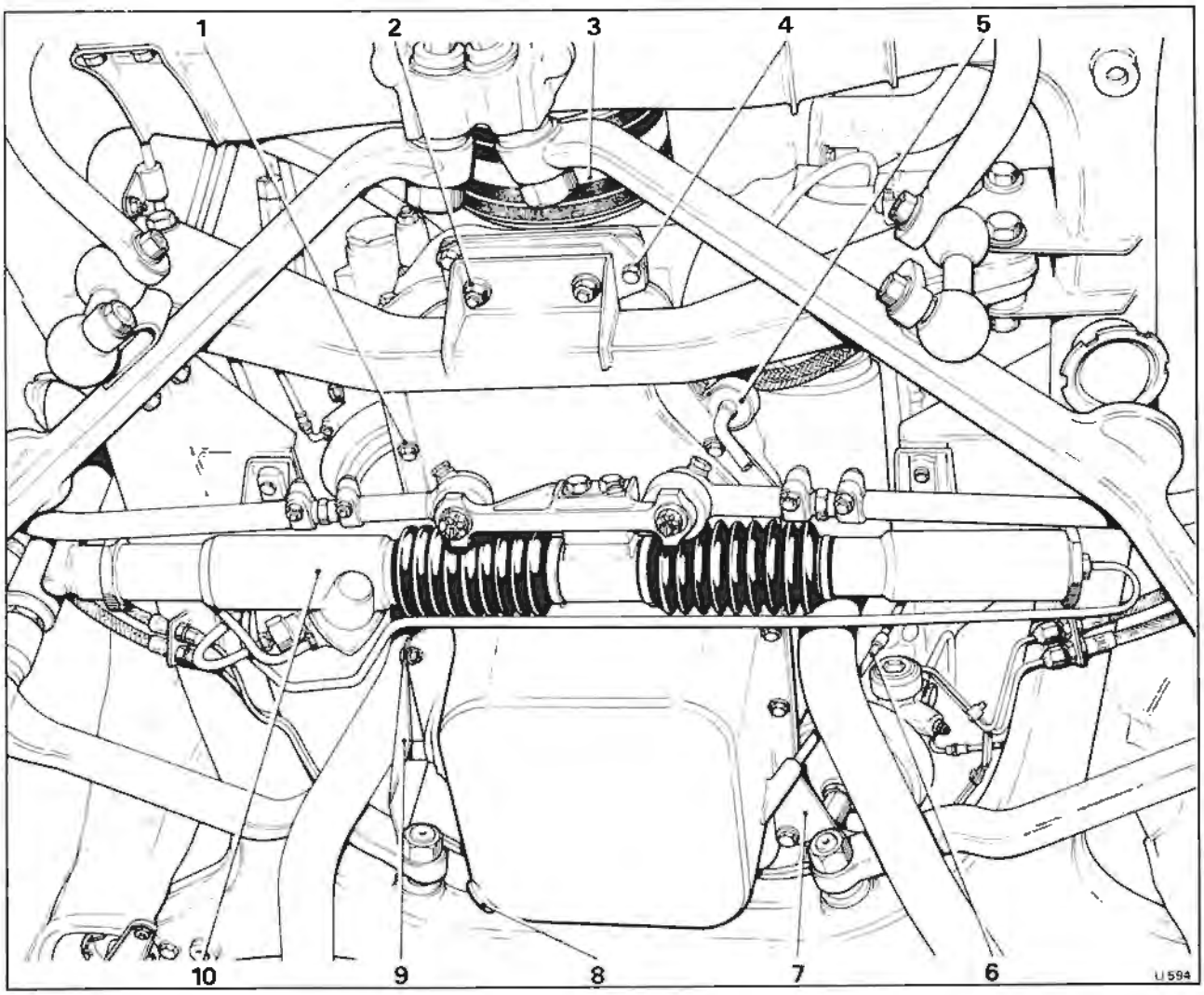

Fig. E16 Removing the engine sump
1 Sump setscrew
2 Lower half mounting nut
3 Crankshaft pulley
4 Upper half mounting setscrew
5 Fuel drain valve
6 Dipstick tube
7 Accumulator bracket
8 Engine oil drain plug
9 Oil level transmitter shield
10 Steering rack

Printed in England
© Rolls-Royce Motors Limited 1981
March 1980
TSD 4200

precautions and proceed as follows.
1. Place the car on a ramp beneath an overhead pulley.
2. Firmly apply the parking brake and chock the road wheels.
3. Disconnect the battery leads.
4. Drain the engine oil into a suitable container. Fit the sump plug.

Refer to Figure E16 for identification of the components to be removed.

5. Remove the steering rack assembly (see Chapter N).
6. Suitably position a sling around the upper front of the engine. Connect the sling to the overhead pulley and 'take the weight' of the engine.

Do not 'take the weight' of the engine on the crankshaft damper and pulley assembly.

7. Remove the two nuts and bolts securing the lower half of the front engine mounting. Collect the washers.
8. Remove the two setscrews securing the upper half of the front engine mounting. Collect the washers and withdraw the rubber mounting assembly and engine stop plate.
9. Remove the engine oil level transmitter shield and disconnect the electrical lead.
10. On cars fitted with hydraulic systems that contain RR 363 brake fluid (i.e. Cars prior to serial number 50001), remove the bracket connecting each accumulator to the sump.

On cars fitted with hydraulic systems that contain hydraulic system mineral oil (i.e. Cars from serial number 50001), remove the bracket connecting the rear accumulator to the sump.
11. Remove the sump setscrews retaining the fuel drain valve in position. Secure the valve away from the area of the engine sump.
12. Unscrew and remove the nut, bolt and setscrew securing the dipstick tube to the engine. Withdraw the dipstick and tube assembly.
13. Raise the engine and using a suitable universal joint type of socket spanner unscrew the retaining setscrews from the rear of the engine oil sump.

Some difficulty may be encountered when removing the setscrews due to the close proximity of the sub-frame crossmember.
14. Remove the remainder of the sump retaining setscrews, ensuring that the sump is supported before all the setscrews are withdrawn.
15. 'Break' the seal that will have formed between the engine oil sump and the crankcase bottom face.
16. Carefully withdraw the sump assembly.
17. Remove the oil pedestal and fine mesh strainer.
18. Remove the sparking plugs (this will facilitate easier rotation of the crankshaft assembly).
19. Rotate the crankshaft until one pair of connecting rod caps are at their lowest point.
20. Unscrew the cap retaining nuts and carefully 'ease off' the cap.
21. Fit protective rubber sleeving over the connecting rod bolts to prevent damage to the crankshaft (see Fig. E17). **Do not remove the connecting rod bolts.**
22. Push the connecting rod and piston assembly upwards away from the crankshaft, to facilitate removal of the shell bearing.
23. Collect the shell bearing from the connecting rod and cap.
24. Repeat Operations 20 to 23 inclusive to the other connecting big-end bearing on the crankpin.

Only one pair of big-end bearings should be dismantled at any one time. The position of the bearing shells should be noted so that if the bearings are to be used again, they can be fitted in their original position.

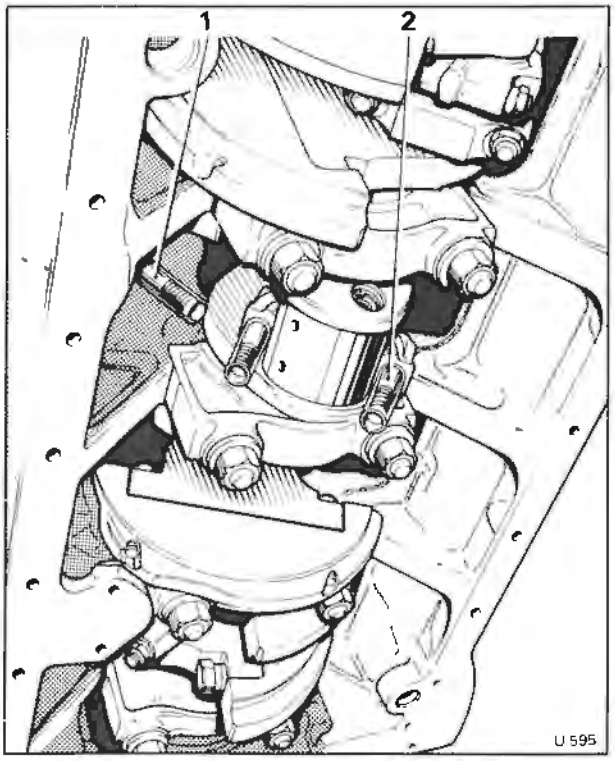

Fig. E17 Removing the big-end bearing shells
1 Conn-rod bolt pushed away from the crankshaft
2 Conn-rod bolt fitted with protective rubber sleeve

Crankpins and bearings - To inspect
1. Thoroughly clean each crankpin with a lint free cloth. Measure each crankpin diameter for wear and ovality (see Section E5, Crankshaft - To regrind).
2. The running clearance between the connecting rod big-end bearing and the crankpin is 0,032 mm. to 0,076 mm. (0.0015 in. to 0.003 in.). The size and wear tolerances are given in Section E3, Dimensional data.

New bearing shells should be fitted if the specified limits of the originals are exceeded due to wear or if the bearing shells are scored.

Connecting rod bearings - To fit
Fit protective sleeves to the connecting rod bolts.

1. If the upper and lower halves of a shell bearing are considered serviceable they can be used again provided that each is kept in its original position.
2. Before fitting new bearings to the connecting rods and caps, etch the cylinder number onto the outside of the locating tang.
3. Thoroughly clean the shells and the crankpin. Ensure that the crankpin oil feed holes from the main bearings are not blocked by sludge or dirt.
4. Lightly smear the upper half of the shell bearing surface with clean engine oil and fit it into the connecting rod.
5. Fit protective sleeves to the connecting rod bolts. Pull the connecting rod downwards onto the crankpin. Ensuring that the rod bolts do not damage the crankpin.
6. Remove the protective sleeving from the connecting rod bolts.
7. Fit the lower half of the shell bearing into the connecting rod and lightly smear it with clean engine oil.
8. Ensure that the tang on each half of the shell bearing is located correctly in its respective recess.
9. Place the cap onto the rod, ensuring that the two tangs are on the same side of the crankpin (see Fig. E21).

If necessary, carefully tap the cap into position until it is fully seated. **Take care to ensure that neither the shell bearing nor the connecting rod bolts become displaced during this operation.**
10. Using a micrometer, measure the overall length of the connecting rod bolts. These should have an overall length of between 71,95 mm. and 72,01 mm. (2.833 in. and 2.835 in.).

Any bolt not conforming to the dimensions quoted, should be carefully removed from the connecting rod (use a hide mallet) and a new bolt fitted.
11. Ensure that the shell bearings are correctly positioned then fit the cap to the connecting rod.
12. Lubricate the connecting rod bolt threads with engine oil and screw the retaining nuts onto the bolt threads. Each nut should be 'screwed on' by hand and lightly 'nipped' using a handbrace and socket.

The nuts should be easy to 'screw on', if effort is required the threads should be examined for burrs, damage or malformation and the offending parts replaced.
13. Torque tighten the nuts to obtain a bolt stretch of between 0,1524 mm. and 0,3810 mm. (0.006 in. and 0.015 in.). This bolt stretch range should be achieved between 4,83 kgf.m. and 6,21 kgf.m. (35 lbf.ft. and 45 lbf.ft.).
14. If any bolt has not been stretched sufficiently increase the torque tightness to 6,90 kgf.m. (50 lbf.ft.) and again check the bolt stretch.
15. If any bolt is still under stretched, slacken both nuts of the connecting rod and measure the free length of the offending bolt. If this measurement is outside the limits quoted in Operation 10, fit a new bolt.

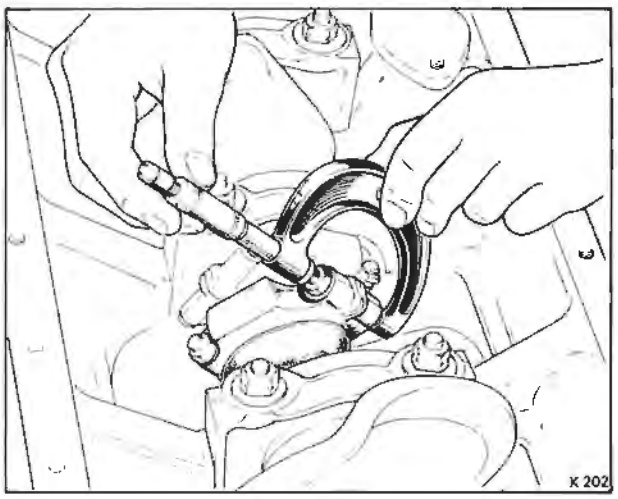

Fig. E18 Checking connecting rod bolt stretch

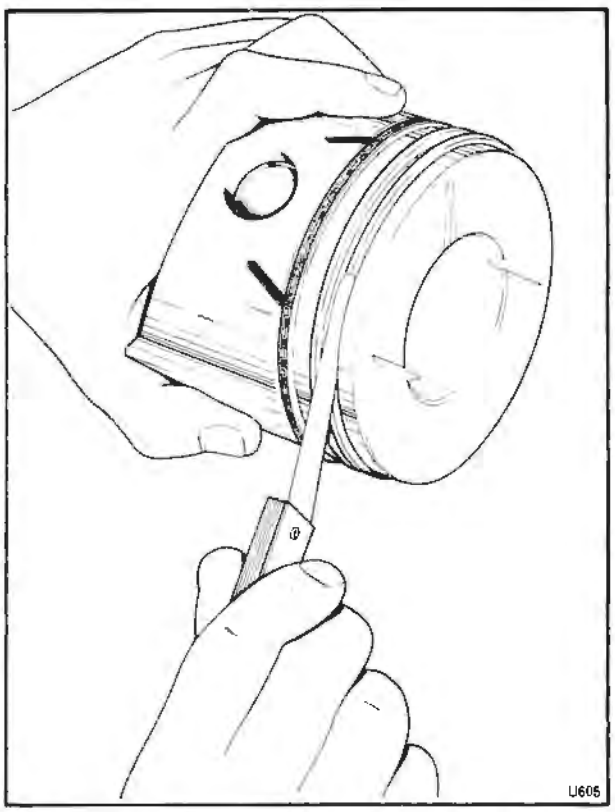

Fig. E19 Checking the piston ring clearance

Should this measurement be inside the limits quoted in Operation 10, repeat Operations 12 and 13. Again measure the bolt stretch. If the bolt now conforms it is acceptable, if not slacken both nuts and replace the suspect bolt with a new one.

Repeat Operations 10 to 13 inclusive.
16. If any bolt has been over stretched when tightening, slacken both nuts on the connecting rod and replace the offending bolt.

Printed in England
© Rolls-Royce Motors Limited 1981
March 1980
TSD 4200

17. Repeat Operations 10 to 16 inclusive to the remainder of the connecting rod big-end bearings.
18. Fit the engine sump using a new gasket.

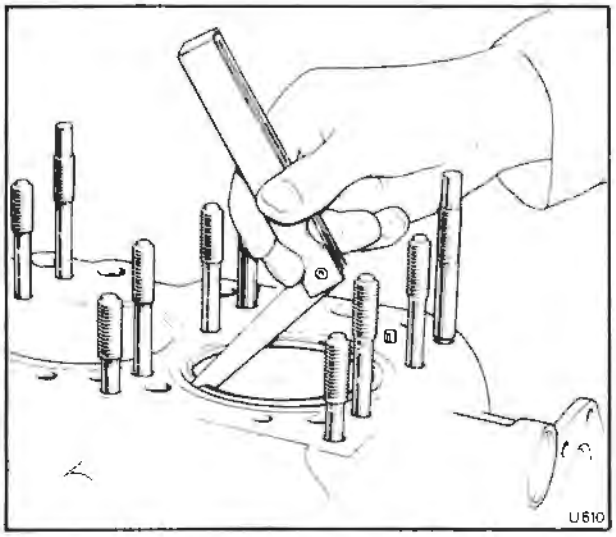

Fig. E20 Checking the piston ring gap

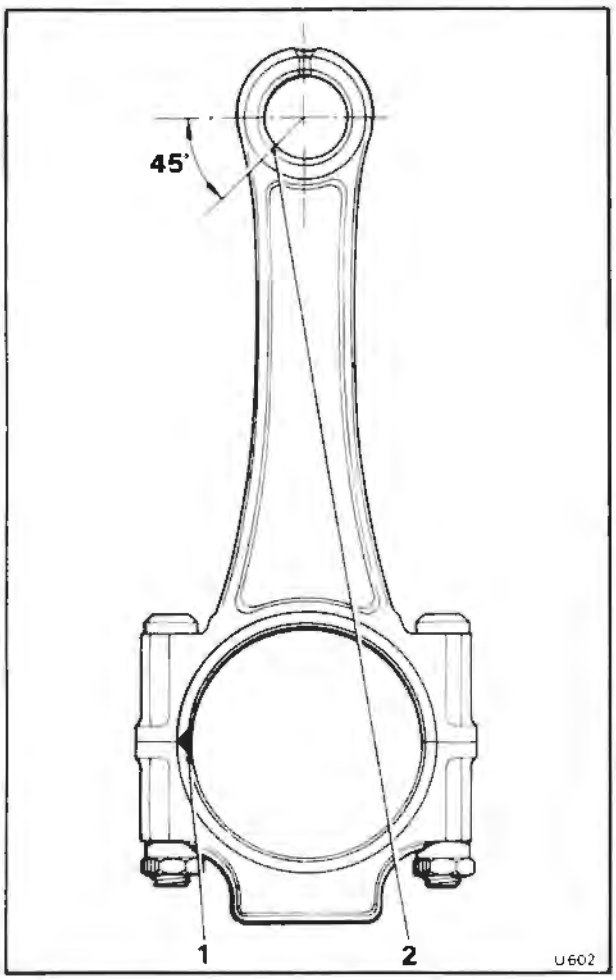

Fig. E21 Position of small end bush
1 Tangs
2 Split in bush

19. Fit all other parts by reversing the procedure given for their removal (see Connecting rod bearings - To remove).
20. Set the engine stop plate gap (see Section E12, Engine removal and installation).

Connecting rod and piston - To remove
1. Remove the cylinder head (see Section E8, Cylinder heads - To remove).
2. Remove the connecting rod cap from the big-end bearing (see Connecting rod bearing - To remove).
3. Push the connecting rod upwards so that the piston and connecting rod assembly can be withdrawn from the top face of the crankcase.
4. Repeat these operations to the remaining piston and connecting rod assemblies.

Connecting rod and piston - To dismantle
1. Remove the circlip from the piston. The circlips are located one at either end of the gudgeon pin bore.
2. Thoroughly warm the piston assembly. This can be achieved by either immersing the piston in a bath of hot oil or placing the piston crown on a hot plate.
3. When the piston is thoroughly warm, push the gudgeon pin out using a suitable guide.

Piston - To inspect
1. Remove the rings from the piston using a suitable expander tool.
2. Remove the carbon deposits from the rings and pistons. Ensure that all the deposit is removed from the piston ring grooves.
3. Thoroughly clean all components.
4. Check that the clearance of the piston rings in their respective grooves is as given in Section E3, Dimensional data (see Fig. E19).
5. Check the compression rings in either a 10,41 cm. (4.10 in.) diameter ring gauge or an unworn part of the cylinder (see Fig. E20). If the rings are in good condition no light should show around the circumferance of the rings.
6. Check the closed gap of each compression ring whilst it is fitted into either the ring gauge or the unworn part of the cylinder bore (see Section E3, Dimensional data).
7. Visually check the condition of the oil control ring.
8. Check the dimension of the piston across the thrust axis. The measurement should be taken at the piston grading point which is 2,3 cm. (0.906 in.) above the bottom of the skirt. The measurement and grade of the pistons are given in (Section E3, Dimensional data).

Small end bush - To inspect and renew
1. Check the diameter of both the gudgeon pin and the small end bush. If the clearance exceeds 0,013 mm. (0.0005 in.) renew the bush.

2. Using a suitable drift, remove the small-end bush.
3. Visually inspect the condition of the connecting rod small-end.
4. Measure the internal diameter of the connecting rod small-end.
5. Measure the external diameter of the new small-end bush.
6. Compare the measurements obtained in Operations 4 and 5. An inference fit between the new bush and small-end of 0,051 mm. to 0,089 mm. (0.002 in. to 0.0035 in.) is essential.
7. Position the new bush so that the chamfered edge is towards the connecting rod. Also ensure that the split in the bush is 45° away from the centre axis of the rod and on the same side of the rod as the locating recesses for the big-end bearing shells (see Fig. E21). In this position the oil hole in the bush should line up with the oil hole in the small-end boss.
8. Press the small-end bush into position until it is flush with the connecting rod boss.
9. Finally, either diamond bore or ream the bush to the finished diameter quoted in Section E3, Dimensional data. The gudgeon pin fit in the small-end bush should be from a size fit to 0,00635 mm. (0.00025 in.) clearance.

Connecting rods - To check alignment and twist
The correct alignment of a connecting rod is of the utmost importance and any connecting rod that has had a new bush fitted and bored must be checked for alignment using a reliable alignment fixture.

Connecting rods that are bent will cause uneven and premature wear between the cylinder walls and pistons.

If an alignment fixture is not available the **alignment** and **twist** of the connecting rods can be checked as follows.

Alignment
1. Fit the gudgeon pin to the small-end bush.
2. Fit a mandrel to the big-end.
3. Mount the connecting rod on an inspection surface table as shown in Figure E22.
4. Using a dial indicator gauge, take a reading at both ends of the gudgeon pin.

The difference between the two readings must not exceed 0,025 mm. (0.001 in.) per 25,40 mm. (1.00 in.) length of the gudgeon pin.

Twist
1. Fit the gudgeon pin to the small-end bush.
2. Fit a mandrel to the big-end.
3. Mount the connecting rod on an inspection surface table as shown in Figure E23.
4. Using a dial test indicator gauge, take a reading at both ends of the gudgeon pin.
5. The difference between the two readings must not exceed 0,076 mm. (0.003 in.) per 25,40 mm. (1.00 in.) length of gudgeon pin.

Connecting rods and pistons - To assemble
To assemble the connecting rods to the pistons

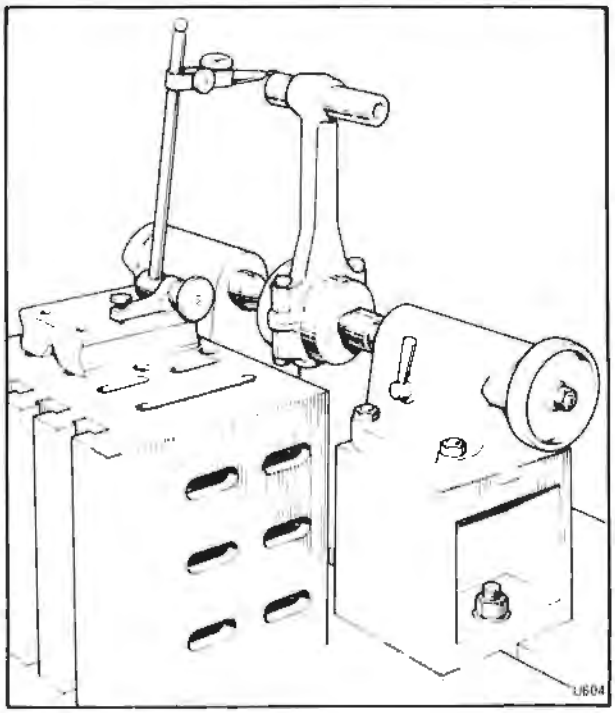

Fig. E22 Checking the connecting rod alignment

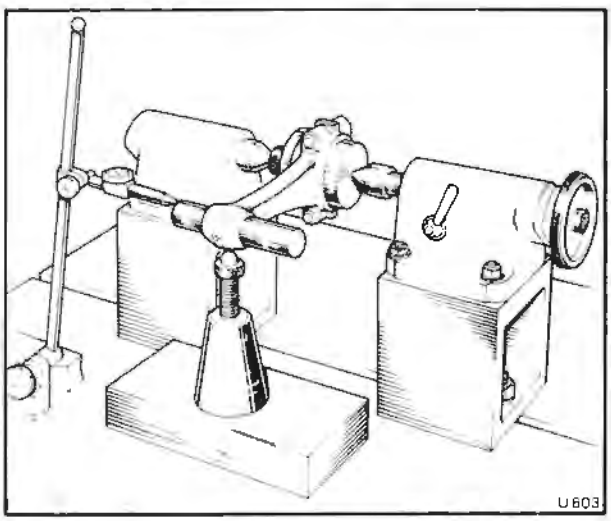

Fig. E23 Checking the connecting rod for twist

reverse the procedure given for dismantling noting the following points.
1. Pistons and gudgeon pins are supplied as an assembly, the gudgeon pin being a selective fit. On no account must pistons and gudgeon pins be interchanged.
2. When fitting the rings to the piston, fit the oil control (scraper) ring assembly first. This ring consists of two thin rails and a centre equaliser. Fit the centre equaliser first.

Fit the two compression rings as shown in Figure E15.
3. To ensure that the gudgeon pin, piston and connecting rod are always assembled the same way,

Printed in England
© Rolls-Royce Motors Limited 1981
March 1980
TSD 4200

fit the pin to the piston so that the cylinder number on the pin is on the same side as the cylinder number on the piston. The tangs on the connecting rod and cap should always be nearest the camshaft (see Fig. E24).

Connecting rods and piston - To fit

To fit the connecting rods and piston assemblies to the engine reverse the procedure for removal noting the following points.

1. Space the ring gaps around the piston.
2. Liberally cover the pistons with either graphogen or clean engine oil and then fit a ring compressor over the piston rings.
3. Ensure that the head of each connecting rod bolt is seated on the connecting rod, if not, carefully tap the head of the bolt into position. Fit a protective rubber sleeve to each bolt before fitting the piston and connecting rod assembly to the engine.
4. Ensure that the shell bearings are correctly located in both the connecting rod and cap.
5. Fit the piston and connecting rod assembly into the cylinder bore from the top.
6. Tighten the piston ring compressor, hold it against the cylinder liner and push the piston into the bore (see Fig. E25).
7. Carefully position the connecting rod onto the crankshaft big-end journal. Remove the protective sleeving from the bolts, finally check the location of the big-end bearing shells and fit the cap.
8. Fit the nuts to the connecting rod bolts and tighten them in accordance with the procedure given in Connecting rod bearings - To fit.

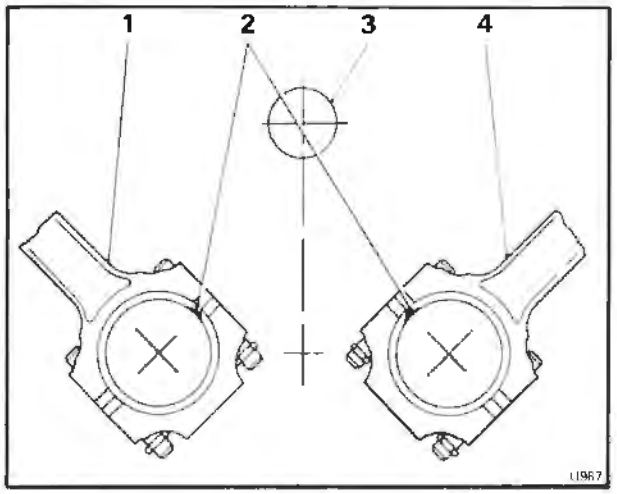

Fig. E24 Position of the connecting rod tangs
1 'A' bank connecting rod
2 Position of tangs
3 Camshaft
4 'B' bank connecting rod

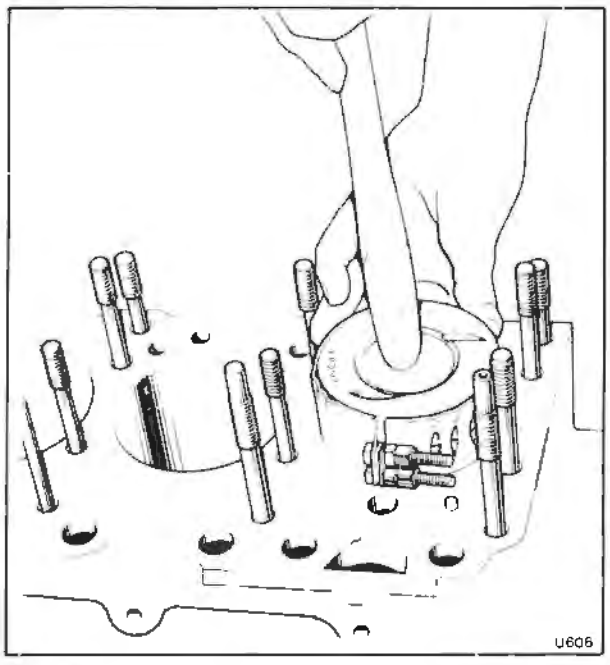

Fig. E25 Fitting a piston

Section E7

Camshaft and Valve mechanism

This section contains information relating to the camshaft timing gear, distributor drive gear, hydraulic tappets, push rods and rockers.

Refer to Section E8, for information relating to the valves and their associated components.

The camshaft is manufactured from cast iron and has chill cast cam peaks. It is centrally positioned between the two banks of cylinders and runs directly in bores machined in the crankcase.

The camshaft is driven through helical gears from the crankshaft. The camwheel is aluminium and the crankshaft gear is steel.

End thrust is taken on a thrust collar and controlled by the thrust plate situated at the front

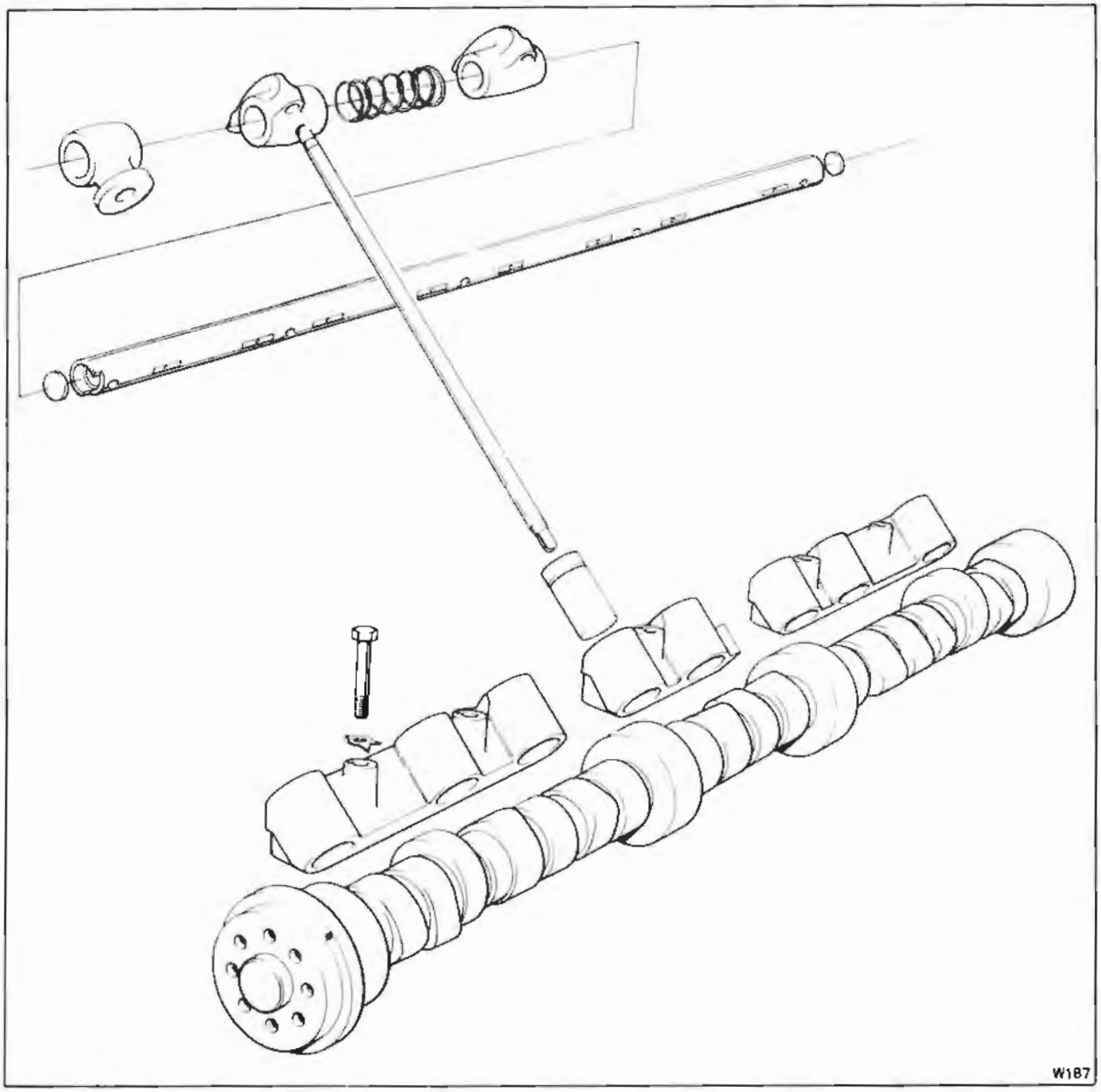

Fig. E26 Camshaft and Valve mechanism

Printed in England
© Rolls-Royce Motors Limited 1981

of the camshaft.

Lubrication of the camshaft timing gear and the crankshaft gear is effected by the high pressure oil jet sprayed directly onto the two gears. The feed for this jet is via a tapping block adapter secured to the camshaft thrust plate. This plate is also the oil gallery cover plate.

A skew gear secured by two setscrews to the rear of the camshaft provides the drive for the distributor. The two setscrews are off-set to ensure correct positioning.

The camshaft incorporates two eccentrics to drive the hydraulic system pumps (see Section E11).

The hydraulic tappets are carried in detachable blocks fitted into the crankcase on either side of the camshaft. The tappets are self-adjusting and require no maintenance. The tappet barrels are produced from cast iron and have a spherical base. These seat onto the camshaft where the cams have a slight longitudinal taper that rotates the tappets thus ensuring even wear of the tappet barrel and base.

A longitudinal flat is machined on the tappet barrel, this supplies oil from the groove in the tappet body to the cam face.

The hydraulic tappet (see Fig. E29) comprises a cylindrical barrel, closed at the bottom end that seats onto the camshaft. Inserted into this body is a plunger that is free to slide up and down; the clearance between the body and plunger is very small. At the lower end of the plunger is a one-way valve. The valve is held closed by a wave washer that is housed in a retainer spigot, clipped onto the end of the plunger.

The upper end of the plunger carries a cap that seats the push rod. The complete plunger assembly is spring loaded away from the base of the tappet body and retained by a circlip.

The push rods are hollow tubes with spherical ends. They transmit the movement of the tappets to the rocker arms. Engine oil passes along the hollow push rod to lubricate the ball end at the rocker arm.

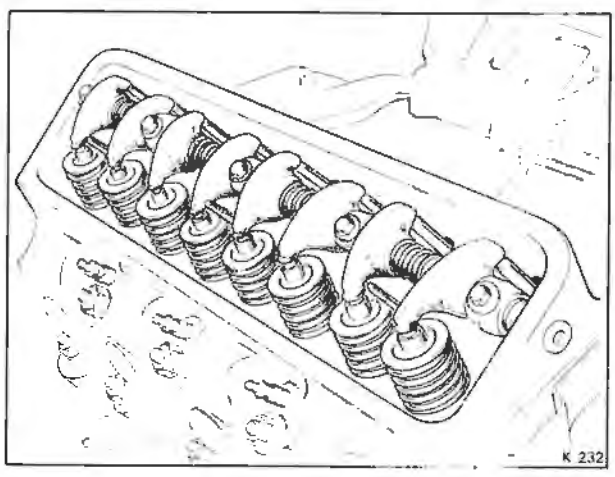

Fig. E27 Rocker shaft assembly

The rocker shafts, rocker arms and spacing springs are carried on five pedestals on each cylinder head. The pedestals are secured by set-screws.

The rocker arms are drilled to provide oil delivery from the rocker shafts to the valve tips and stems.

For details of the valve assemblies refer to Section E8.

Rocker shaft assembly - To remove and dismantle (see Fig. E27)

1. Carry out the usual workshop safety precautions.
2. Unscrew the two cap nuts retaining the ignition harness to the rocker cover.
3. Unscrew the three reach nuts securing the rocker cover to the cylinder head.
4. Carefully prise around the joint face of the rocker cover. Once the joint has been freed, lift the rocker cover from the engine.
5. Unscrew the five setscrews securing the rocker shaft in position. **Do not withdraw the setscrews.**
6. Carefully withdraw the rocker shaft from its position. Leave the setscrews positioned through the pedestals to retain the rocker arms and springs in position on the shaft.
7. Place the rocker shaft assembly on a bench and withdraw the end setscrew whilst holding the pedestal in position. Ensure that the spring does not force any components off the end of the shaft.

Slowly release the hand pressure applied to the end of the rocker shaft and allow the spring to push the pedestal off the rocker shaft.
8. Collect the end pedestal, first rocker arm, spring and second rocker arm.
9. Repeat Operations 7 and 8 to the next pedestal and continue repeating the exercise until both rocker shafts are dismantled.

Rocker shaft assembly - To inspect

1. Examine the pads on the rocker arms for wear and renew any that are badly worn.

Slight 'scuffing' or pitting on the pads may be removed with a smooth stone.
2. Rocker pads are case hardened to a depth of between 0,635 mm. and 0,762 mm. (0.025 in. and 0.030 in.) and the Rockwell hardness value should be between C57 and C65.
3. If the hardness value is below these figures, the rocker arms should be renewed.

Rocker shaft assembly - To assemble and fit

Assemble and fit the rocker shaft by reversing the removal and dismantling procedures, noting the following.
1. The rockers are handed and should be fitted in pairs so that the arms point inwards to the cylinder bore.
2. The cylinder heads have rocker shaft dowel pins fitted. Ensure that the rocker shaft is correctly located on the pins so that the oil feed holes align.

3. When tightening, commence with the centre setscrew and alternate on either side towards the end setscrew.
4. Torque tighten the rocker shaft retaining setscrews to the figure quoted in Chapter P.

Push rods - To remove, inspect and fit
1. Carry out the usual workshop safety precautions.
2. Remove the rocker cover and rocker shaft.
3. Withdraw the push rods. Label each one for identification purposes during assembly.
4. Check the push rods for bow. If any push rod has a total indicator reading of more that 0,51 mm. (0.020 in.) it should be discarded and a new push rod fitted.
5. Ensure that the holes in the ball ends are not blocked by dirt, etc.
6. When fitting the push rods reverse the removal procedure. Always ensure that the push rods are returned to their original positions and that they are correctly seated in both the hydraulic tappets and the rocker arms.

Hydraulic tappets
A tappet which is found to be defective in service should be replaced by a complete assembly. **Individual components must not be renewed.**

Where a tappet is noisy but otherwise appears to be serviceable and replacement tappets are not readily available, it may be worthwhile dismantling the existing tappet and thoroughly washing it in clean paraffin. After cleaning, refit the tappet.

Tappet noise
A defective tappet makes a noise like a 'rifle crack' and is usually caused by one or more tappets collapsing, it can be heard with each revolution of the camshaft. This could be caused by dirt which has infiltrated into the tappet(s) in which case the tappet(s) should be dismantled and cleaned. If cleaning the tappet does not cure the fault, the tappet should be renewed.

The tappet can be isolated by the fact that the noise changes as the rocker arm is depressed manually to take up any 'sponge' while the engine is running.

If the noise is not caused by a collapsed tappet(s) one of the following causes should be suspected.
1. Sometimes air is drawn into the tappets after standing overnight and one of the tappets may be reluctant to clear itself even after 30 minutes hot running.
2. Occasionally a tappet leaks down too quickly at high temperatures causing a knock. This tappet is really a milder case of the 'rifle crack'failure and should be renewed.
3. Occasionally a tappet will stick in the bore of the tappet block at high temperatures causing a knock. This will show itself by being consistently noisy when the engine is very hot but quiet at other times.

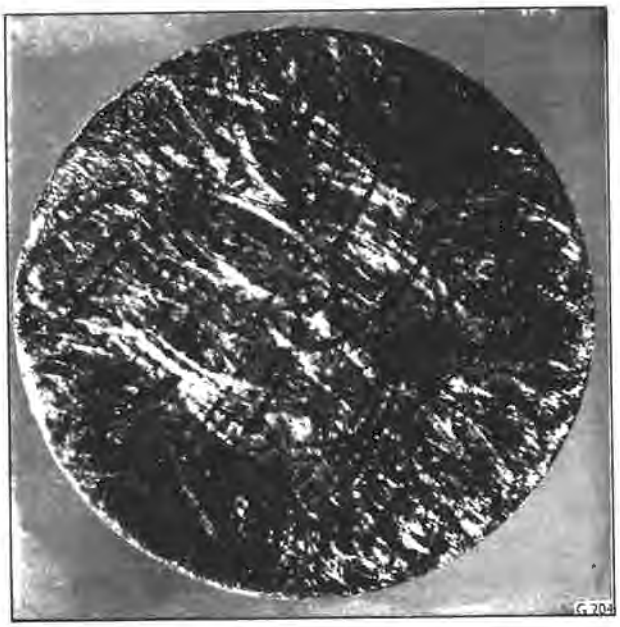

Fig. E28 Severely scuffed tappet base

Should this situation be encountered (and all other tappet rectification measures failed to effect a cure), the suspect tappet block should be checked for incorrect crankcase bedding. Lightly smear the seating face with engineers blue and fit the block in the crankcase. If the check proves conclusively that the tappet block bedding is faulty, the crankcase can be scraped to improve the situation.

Extreme care must be exercised when carrying out this operation and the minimum amount of metal removed from the crankcase.

Tappet wear
There is seldom a cause for rejecting tappets due to an appearance of wear on the bottom face unless the cam peak on the camshaft is also badly worn.

It may be harmful to replace a mildly worn tappet with a new one unless the camshaft is also changed. For this reason only the tappets which are actually causing a problem should be changed.

If it is found necessary to fit a new camshaft to an engine, one complete set of sixteen new tappets must also be fitted.

Hydraulic tappets - To remove
1. Carry out the usual workshop safety precautions.
2. Remove the carburetters or fuel injection system equipment (see either Chapter K or Chapter U).
3. Drain the engine coolant (see Chapter L).
4. Depressurise the hydraulic systems (see Chapter G).
5. Remove the induction manifold.
6. Progressively unscrew the setscrews securing the tappet chest cover to the crankcase. The setscrews must be removed progressively. If the brake pump operating cams happen to be at their peak, distortion could occur to the tappet chest cover.

Printed in England
© Rolls-Royce Motors Limited 1981
December 1980
TSD 4200

7. Remove the rocker covers.
8. Progressively unscrew the five setscrews securing the rocker pedestals to each cylinder head, then remove the rocker shaft assemblies.
9. Remove the push rods.
10. Withdraw the hydraulic tappets from the tappet blocks.

Hydraulic tappets - To dismantle
1. Press down the spherical cap situated in the top of the tappet and remove the circlip holding the cap in place. After gradually releasing the pressure from the spherical cap the tappet can be dismantled (see Fig. E29).
2. Remove the plunger and valve from the tappet barrel. The tappet barrel should be examined for any signs of wear on the base.

Hydraulic tappets - To assemble and prime
In order to obtain the high degree of accuracy necessary for efficient operation of the hydraulic tappets, it is essential that extreme precautions are taken when assembling the components to ensure complete cleanliness.

It is therefore most important that particular attention is given to the following.

(a) Due to the highly critical surfaces and dimensions of the hydraulic tappets, great care and cleanliness are of the utmost importance when handling tappet components. If a cloth is to be used ensure that it is lint free.
(b) Ensure that the assembly tank is perfectly clean before adding paraffin; only clean fresh paraffin must be used.
(c) Wash all the tappet components in clean paraffin, taking care that the components of each tappet are retained as an assembly and are not interchanged with parts of another tappet.

1. Commence assembly of the tappet by fitting the wave washer (see Fig. E29) and valve into the retainer.
2. Using 'finger' pressure, carefully press the retainer assembly onto the spigot of the plunger.
3. Fit the spring onto the retainer assembly.
4. Fit the valve assembly (plunger, valve, wave washer, retainer and spring), into the tappet barrel.
5. Fit the cap into the top of the plunger.
6. Using an old push rod press the cap downwards until it is possible to fit the retaining circlip into the groove located inside the top of the barrel.
7. Release the pressure.
8. Submerge the tappet assembly in clean Esso T.S.D. 1047 rust inhibiting paraffin.
9. Using a small probe push the valve off its seat. The probe should be carefully positioned through the small hole in the tappet cap and pushed down into the tappet until it contacts the valve. A slight increase in pressure will then be required to overcome the wave washer loading and open the valve.
10. Continue to hold the valve open and place a small screwdriver into the cap adjacent to the probe.
11. Apply pressure to both the probe and screwdriver. Press the cap downwards in the tappet barrel, compressing the spring. Note the air bubbles that are expelled from the tappet barrel oil inlet hole.
12. When the air bubbles cease, release the pressure from the cap and valve.

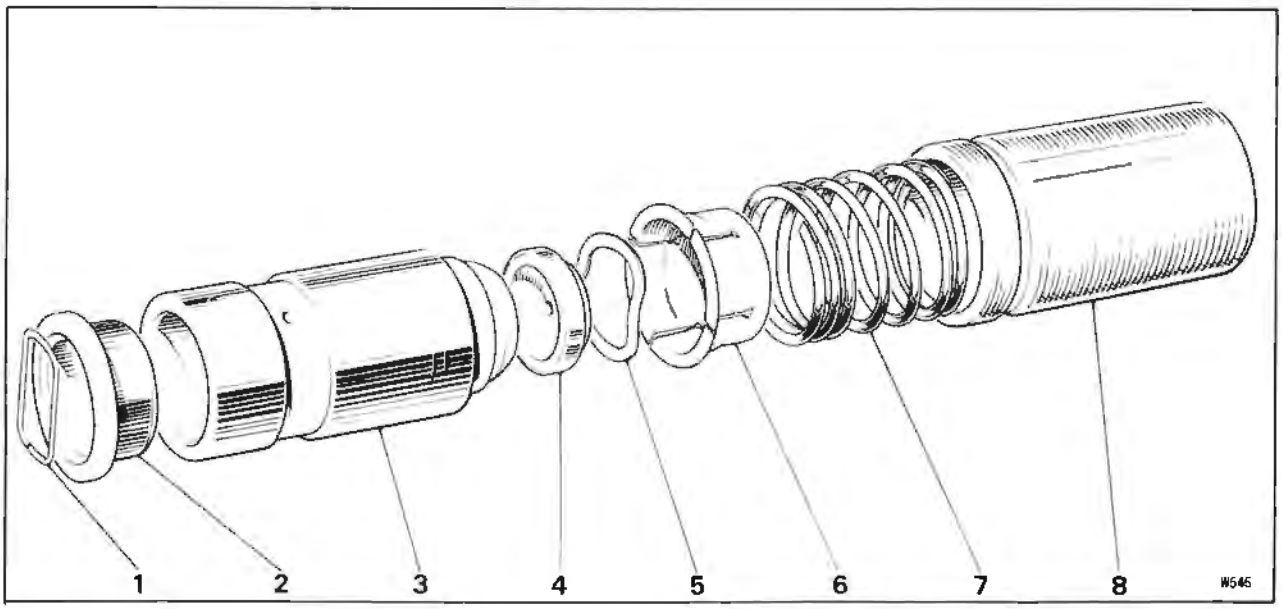

Fig. E29 Hydraulic tappet
1 Circlip
2 Cap
3 Plunger
4 Valve
5 Wave washer
6 Retainer
7 Spring
8 Tappet barrel

13. Repeat Operations 9 to 12 inclusive, until the air bubbles have ceased to appear throughout the cycle of operations.
14. Withdraw the probe from the small hole in the centre of the cap.
15. Again apply pressure to the cap with a small screwdriver. If the assembly feels solid it can be assumed that it is operating satisfactorily, therefore it can be removed from the paraffin.

When tappets are to be fitted immediately after overhaul, they should be primed with clean engine oil.

Hydraulic tappets - To fit
1. Oil the bores of the tappet blocks.
2. Check that if new tappets are being fitted, the grade of each tappet corresponds with the bore of the tappet block. The tappet barrel grading marks are etched onto the top lip of the barrel.
3. Fit the tappets.
4. Fit the push rods to the engine, into the same position from which they were removed.
5. Fit the rocker shafts then progressively tighten the securing nuts.
6. Fit the tappet chest cover.

Tappet chest cover - To fit
1. Rotate the camshaft until the brake pump eccentrics are at approximately B.D.C.
2. To prevent the possibility of hydraulic lock, ensure the brake pumps are drained of fluid.
3. If necessary, check that the position of the two brake pump rods is correct and fit the brake pumps (see Section E11).
4. Wellseal the crankcase tappet cover joint face, then fit a new length of sealing thread to the face. Fit the thread so that its two ends overlay and it surrounds all the tapped holes in the crankcase (see Fig. E30).
5. Wellseal the joint face of the tappet cover.
6. Fit the tappet cover to the crankcase then fit and tighten the setscrews.
7. Complete the engine build by reversing the procedure given for dismantling, noting the following.
8. Fit new joints and sealing rings.
9. Refer to Chapter P for torque tightening figures.
10. Ensure that the brake pipes are not overtightened, otherwise damage to the conical seatings may occur.
11. Any hoses showing signs of deterioration should be renewed.
12. Ensure that the driving belts are adjusted to the correct tension.

Camshaft - To remove
1. Remove the hydraulic tappets (see Section E7).
2. Remove the transmission (see Chapter T).
3. Remove the flywheel.
4. Remove the distributor together with its pedestal (see Chapter M).
5. Remove the pressed steel cover from the rear end of the crankcase to expose the distributor driving gears (see Fig. E31).

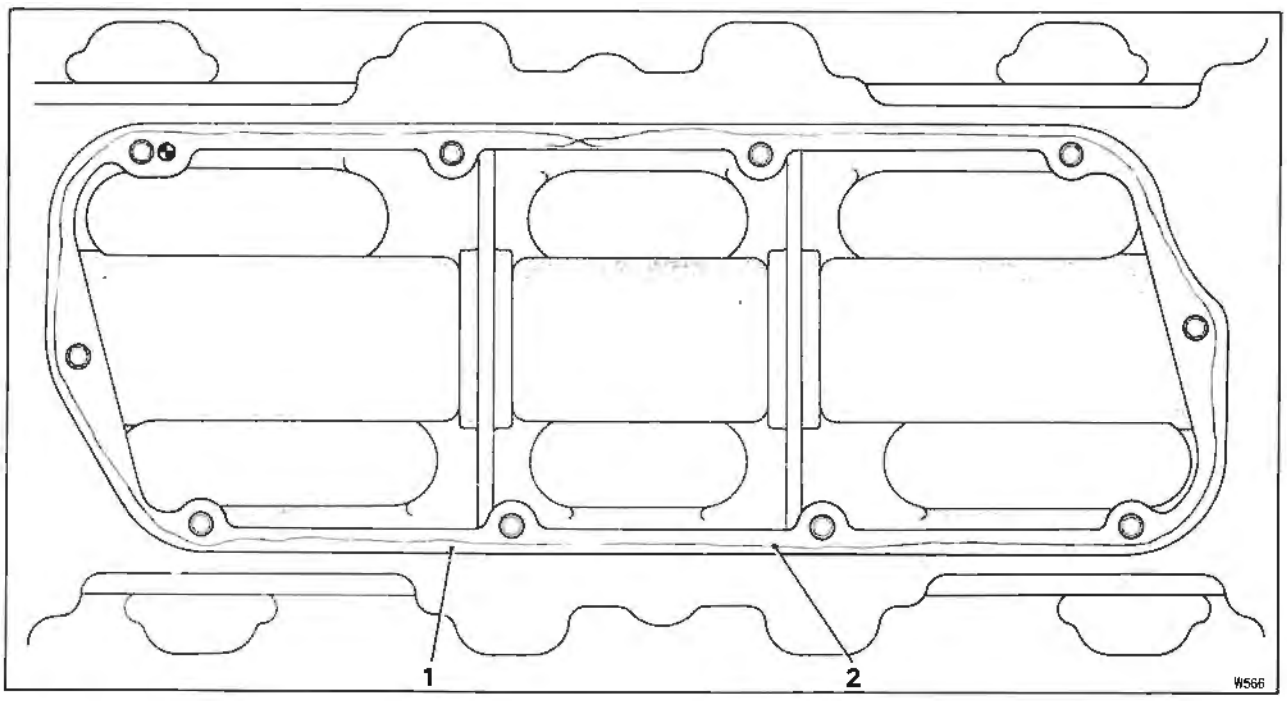

Fig. E30 Crankcase to tappet cover joint
1 Crankcase tappet cover face
2 Silk sealing thread

Printed in England
© Rolls-Royce Motors Limited 1981
December 1980
TSD 4200

6. Withdraw the distributor driving shaft together with the locating plug and 'O' ring.
7. Withdraw the distributor driving spindle and integral gear together with the thrust washer.
8. Remove the skew gear from the rear end of the camshaft.
9. Remove the radiator grille, refrigeration condenser and radiator matrix.
10. Remove the coolant pump and lower front cover from the front of the engine (see Section E5).
11. Unscrew the setscrews from the camshaft and withdraw the cam gear.
12. Remove the camshaft thrust plate together with the timing gear lubricating oil pipe assembly. Withdraw the camshaft through the front end of the crank -case. Take care that the bearing bores are not damaged by the cam lobes.

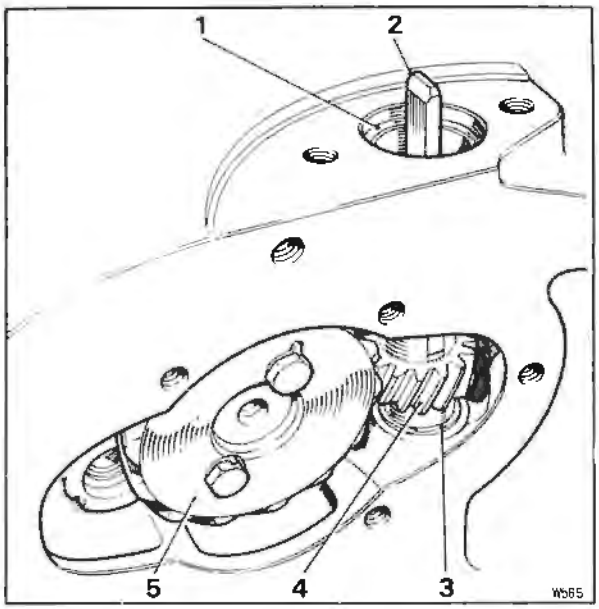

Fig. E31 Distributor driving gears
1 Locating plug
2 Distributor driving shaft
3 Thrust washer
4 Driving spindle and integral gear
5 Skew gear

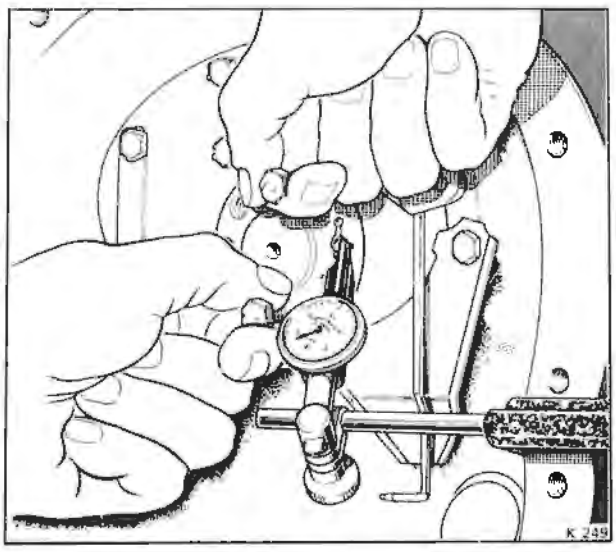

Fig. E32 Checking the camshaft end-float

Camshaft - To inspect
1. Inspect the cams for wear and pitting. The cam lift dimensions are given in Section E3,Dimensional data.
2. If wear is in excess of the figures given, the camshaft must be renewed.

Camshaft - To fit
1. Lightly smear the camshaft bearings with clean engine oil. Lubricate the camshaft lobes with EP (extreme pressure) oil such as Castrol Hipress SC 140. Fit the camshaft through the front end of the crankcase, taking care that the cam lobes do not damage the camshaft bearing bores.
2. Fit the timing gear lubricating jet to the thrust plate and secure it with two setscrews and tab-washers.
3. Fit and secure the camshaft thrust plate to the crankcase; use new tab-washers. Torque tighten the setscrews to the figures quoted in Chapter P; lock the tab-washers.

Camshaft end-float - To check (see Fig. E32)
1. Fit a dial test indicator to the crankcase and set the scale to zero.
2. Fit the two setscrews to the end of the camshaft.
3. Grip the setscrews then move the camshaft backward and forward and note the reading on the dial test indicator.
4. The camshaft end-float should be between the figures quoted in Section E3, Dimensional data.

Valve gear - To time (see Fig. E33)
1. Rotate the crankshaft until the mark on the crank -shaft timing gear is vertical and towards the top of the crankcase.
2. Fit the camshaft timing gear to the camshaft so that the mark on the gear is aligned with the mark on the crankshaft timing gear; do not fit any setscrews at this stage.
3. Carefully rotate the camshaft until the holes in the camshaft timing gear align exactly with the threaded holes in the camshaft (one hole is offset).
4. Fit the end plate cover and secure the timing gear and the cover to the camshaft with eight setscrews. Torque tighten the setscrews to the figure quoted in Chapter P.

Camshaft timing gear backlash and run-out - To check
1. Fit a dial test indicator to the crankcase and set the scale to zero as shown in Figure E34.
2. Rock the cam gear and check the backlash. The backlash should be between the figures quoted in Section E3, Dimensional data.
3. Check the backlash on various teeth around the

circumference of the gear.
4. Check the timing gear run-out as follows (see Fig. E35).
5. Move the indicator pointer so that it touches the front face of the cam gear.
6. Rotate the crankshaft and check the run-out shown on the indicator dial. The run-out should not exceed the figures quoted in Section E3, Dimensional data.

Distributor driving gear - To fit
1. Fit the camshaft distributor driving gear.
2. Rotate the crankshaft until the timing marks on the camshaft and crankshaft gears are in line.
3. Fit the thrust washer to the distributor driving gear spindle then fit the gear into the recess in the crankcase. It will help in fitting this gear if the washer is held to the gear with a light smear of grease.
4. When the gear is fitted, the slot in the top of the gear spindle should be in line with the camshaft (see Fig. E31).

On no account should the setting of the crankshaft and camshaft be disturbed whilst fitting this gear.
5. Fit the distributor driving shaft to the driving spindle then fit the locating plug.
6. If necessary, renew the rubber 'O' ring on the locating plug.
7. Using a dial test indicator in a similar manner to that shown in Figure E34, check the backlash of the distributor driving gear. This should be between the figures quoted in Section E3, Dimensional data.
8. Fit the camshaft rear cover using a new paper joint.

Engine assembly - To complete
Complete the engine assembly by reversing the procedure given for camshaft removal, noting the following.

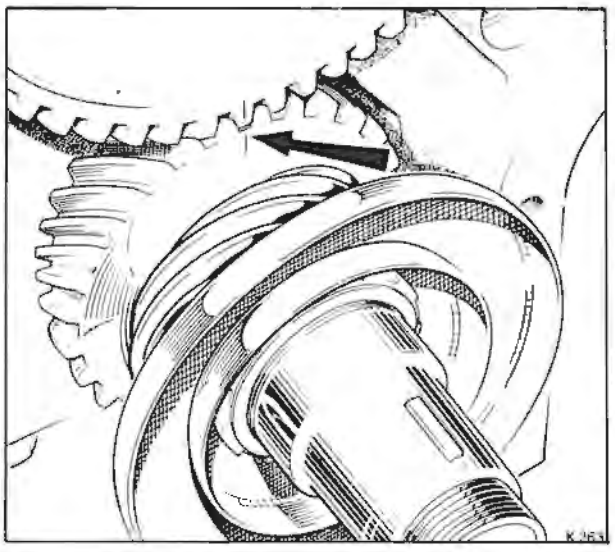

Fig. E33 Valve timing marks

1. All setscrews, nuts and bolts must be torque tightened to the figures quoted in Chapter P.
2. Renew all joints.
3. Fit a new Neoprene seal between the lower front

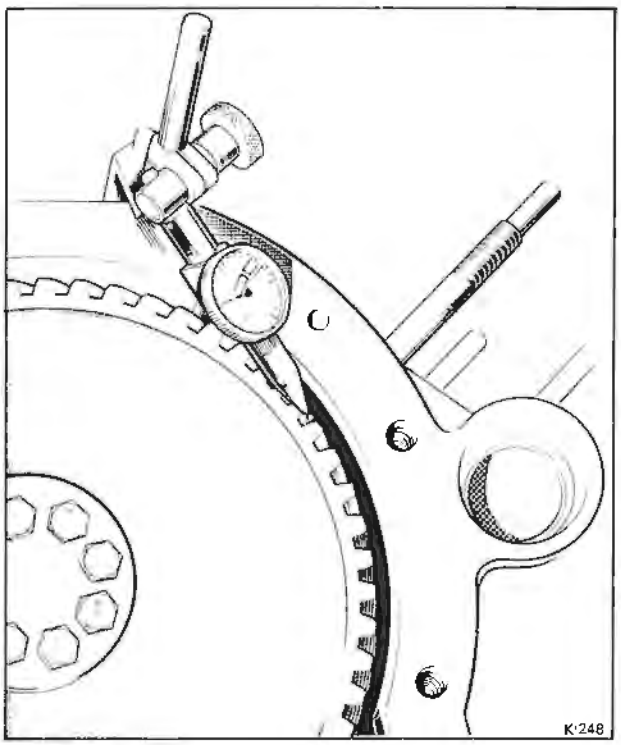

Fig. E34 Checking the timing gear backlash

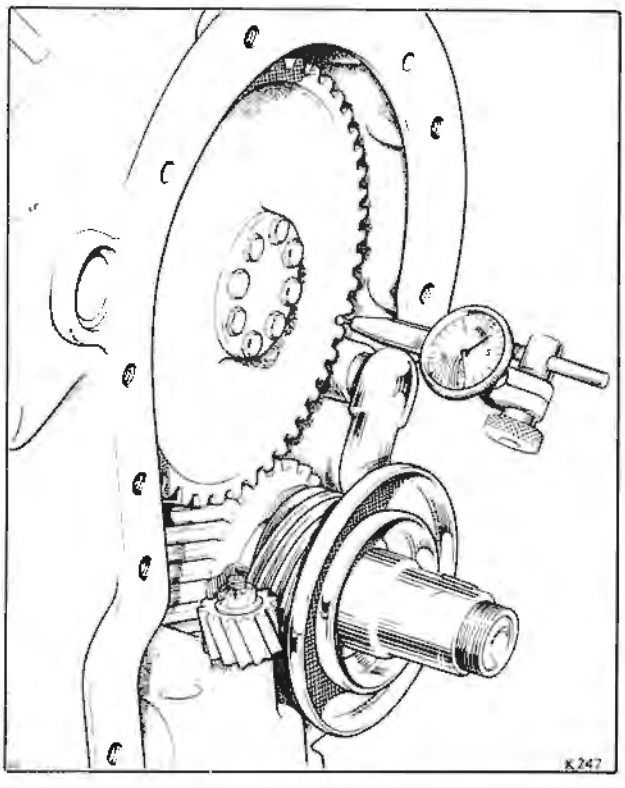

Fig. E35 Checking the timing gear run-out

Printed in England
© Rolls-Royce Motors Limited 1981
December 1980
TSD 4200

casing and the coolant pump.
4. Ensure that the tappet cover is fitted correctly.
5. Fit the distributor and time the ignition as described in Chapter M.
6. If a new camshaft is fitted to an engine, one complete set of sixteen new tappets must also be fitted.

Section E8

Cylinder heads and Valves

Printed in England

The two detachable cylinder heads are produced from cast aluminium alloy, each having four separate inlet and exhaust ports. The cylinder heads are fitted with phosphor bronze exhaust valve guides and cast iron inlet valve guides. The valve seat inserts are of austenitic steel.

The inlet valves are produced from alloy steel with induction hardened tips. The exhaust valves are austenitic steel with stellite tip and valve seat face.

Cylinder heads - To remove

The operations listed form the basic procedure to be followed. In service, small variations will be encountered due to the different vehicle specifications.

1. Carry out the usual workshop safety precautions.
2. Depressurise the hydraulic systems (see Chapter G).
3. Drain the cooling system (see Chapter L).
4 Slacken the drive belts situated at the front of the engine.
5. Remove the refrigeration compressor (together with the fuel cooler if fitted) from its mountings and move from the vicinity of the 'B' bank cylinder head.
6. Remove the E.G.R. valves and distribution pipes (if fitted) refer to Chapter U.
7. Remove the carburetters and air intake horns or the fuel injection system from the induction manifold (see Chapter K or U).
8. Remove the air injection pump, pipes and air diverter valve (if fitted) refer to Chapter U.
9. Remove the alternator (see Chapter M).
10. Remove the steering pump (see Chapter N).
11. Disconnect the outlet hose from the thermostat housing.
12. Disconnect the hose to the radiator header tank.
13. Disconnect the long rod of the throttle control at the trapeze mechanism.
14. Detach the trapeze and mounting bracket from the body longeron.
15. Disconnect the hydraulic pipes from the brake pumps.
16. Remove the hydraulic reservoirs (see Chapter G).
17. Detach the coolant heater tap and move it from the vicinity of the cylinder head.
18. Detach the engine oil dipstick steady bracket.
19. Unscrew the setscrews securing the thermostat by-pass pipe to the coolant pump.
20. Unscrew the setscrews, collect the washers and carefully withdraw the induction manifold. Discard the gaskets.
21. Unscrew the cap and reach nuts from the rocker covers. Move the engine loom from the vicinity of 'A' bank cylinder head.
22. Disconnect the leads from the sparking plugs and move the conduit from the vicinity of the cylinder head.
23. Remove the exhaust manifold (see Chapter Q).
24. Unscrew the setscrews securing the tappet cover and withdraw the cover.
25. Unscrew the three nuts from each rocker cover. Withdraw the rocker covers.
26. Unscrew the rocker shaft retaining setscrews and remove the rocker shaft.
27. Withdraw the push rods.
28. Visually check that all necessary pipes, electrical cables and components have been either disconnected or removed.
29. Using the special spanner (RH 7126) unscrew the cylinder head nuts. Commence unscrewing the nuts at each end of the assemblies and progressively work inwards.
30. Withdraw the cylinder heads and gaskets, taking care that the cylinder head studs do not damage the face of the heads. Also ensure that the threads of the studs are not damaged as the cylinder heads are removed.

Cylinder head - To fit

Fit the cylinder head by reversing the procedure given for removal, noting the following.

1. Ensure that all joint faces are clean.
2. Always use new gaskets.
3. Apply an even coating of Wellseal to both sides of the cylinder head gasket. Leave the gasket for between 5 and 10 minutes, ensuring that it is stored in a clean area (i.e. away from particles of dirt,etc.).
4. Fit the gasket to the crankcase. Always ensure that the cylinder head gasket is fitted the correct way around, otherwise, incorrect alignment of the coolant holes may occur.
5. Fit the cylinder head and complete the assembly of the engine.
6. Torque tighten all nuts and setscrews to the figures given in Chapter P.
7. If any core plugs are to be fitted, ensure that a new aluminium washer is used and the threads coated with Loctite Superfast 572.

Valves - To remove (see Fig. E36)

Always label the parts as they are removed so that they can be fitted into their original position when assembling. To remove the valves, special tools RH 7094 and RH 7200 are required.

1. Remove the cylinder heads.
2. Fit a valve tool pedestal at each end of the cylinder head.

The pedestals locate in the recesses used for the rocker pedestals and are secured by nuts and bolts.

3. Place the cylinder head on the wooden base (RH 7200), ensuring that the four raised blocks fit into

© Rolls-Royce Motors Limited 1982

August 1982
TSD 4200

the combustion chambers to support the valves whilst the springs are being compressed.

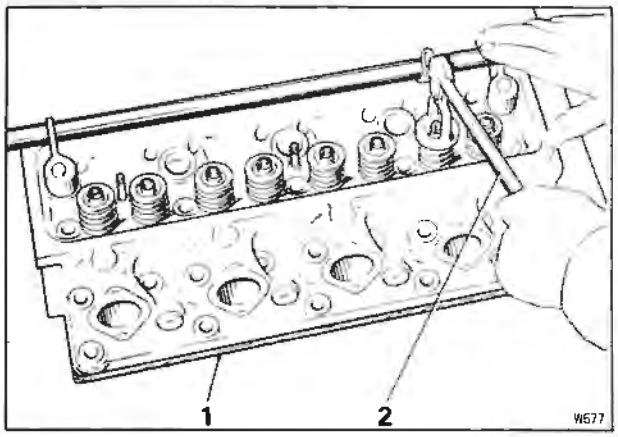

Fig. E36 Valve removal
1 Block of wood (RH 7200)
2 Valve spring compressing tool (RH 7094)

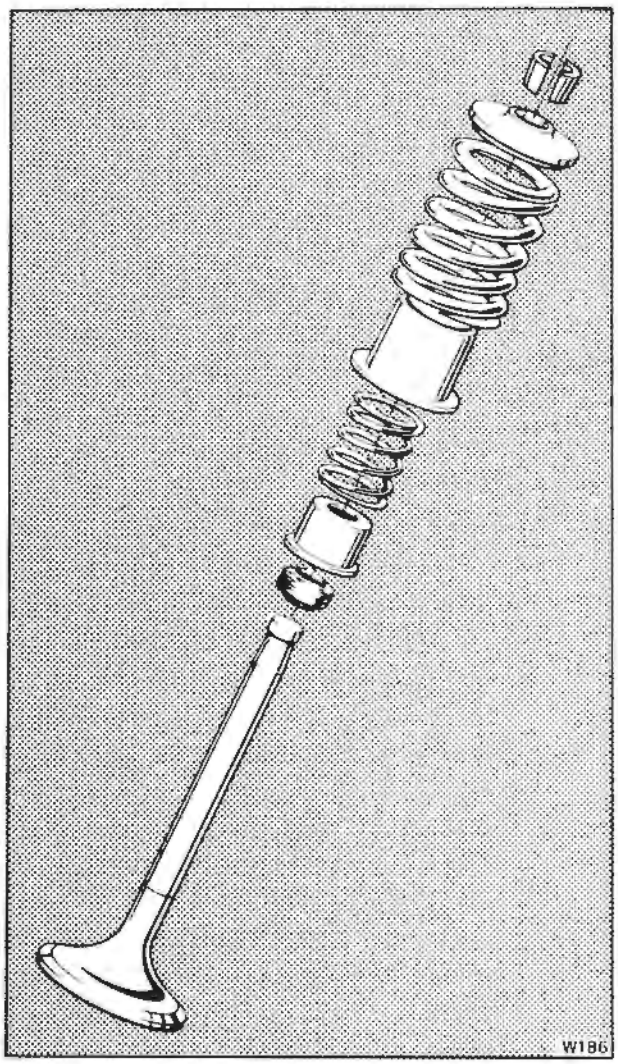

Fig. E37 Valve assembly

4. Insert the fulcrum bar through the holes in the pedestals.
5. Fit the hook of the valve spring compressing tool under the fulcrum bar and fit the stirrup over the valve top washer.
6. Compress the valve spring and remove the two collets.
7. Gradually release the pressure from the compressing tool.
8. Move the stirrup from the valve top washer.
9. Withdraw the top washer, valve spring, grommet spring housing (bottom washer), grommet spring, grommet housing and grommet (see Fig. E37).
10. Repeat Operations 5 to 9 inclusive to the other valves in the cylinder head.
11. Turn the cylinder head over and withdraw the valves.
12. Remove the special tools and repeat the operations to the other cylinder head.

Valves - To fit

To fit the valves reverse the procedure given for removal, noting the following.
1. Ensure that each valve is fitted into the guide from which it was removed.
2. Check that the valves operate smoothly in their respective guides and that they are seating correctly.
3. Thinly coat the valve stems with 'Molyko G Rapid' grease or its equivalent and lubricate the valve guide with engine oil, prior to fitting the valves.
4. Soak the grommets in clean engine oil before they are fitted.
5. After assembling the valves apply 'Silastic 732' to seal the spaces between the collets.
6. The inlet and exhaust valve springs are not interchangeable.

The inlet valve spring is slightly shorter than the exhaust valve spring.

Valve guides - To remove

1. Remove and dismantle the cylinder head.
2. Remove the valve guide as shown in Figure E38. Draw the guides out from the rocker side of the head using the special tool RH 7207.

Valve guides - To fit

1. Thoroughly clean the valve guide bores in the cylinder heads and measure the bore diameter.
2. Select a new set of oversize guides that will give the correct interference fit when installed in the cylinder head (see Section E3, Dimensional data).
3. Using the special tools (RH 7207 and RH 7272) draw the valve guides into the cylinder head from the rocker side, until they stand the correct distance proud of the cylinder head (see Fig. E39). **On late engines** the valve guides should be drawn into the cylinder head until the shoulder on the valve guide abuts the cylinder head.
4. Using the special reamer (RH 7825) or the tungsten carbide tipped version (RH 7827), ream both the inlet and exhaust valve guides to the finished size.

Valve seat inserts - To remove

1. Remove the inserts from the head by machining, leaving a thin skin of metal approximately 0,25 mm. (0.010 in.) thick.
2. After machining, carefully lift the insert shell from the bore in the cylinder head.

Valve seat inserts - To fit

1. Compare the size of the insert bore in the cylinder head with the standard figures given in Section E3, Dimensional data.
2. If the bores do not conform to the size quoted, it will be necessary to machine them to a larger diameter and to fit oversize seat inserts (refer to the Parts List).
3. Ensure that the correct interference fit is maintained when the inserts are fitted in the cylinder head (see Section E3, Dimensional data).
4. To fit the seats, place the cylinder head in an oven and heat to a temperature of 151.5°C. (305°F.) for a period of one hour.

The cylinder head should be quickly removed from the oven and the insert(s) driven into position using a soft drift.

Do not finish machine the valve seats until after the valve guides have been reamed.

5. If the necessary service facilities are not available it is recommended that the cylinder heads be returned to Rolls-Royce Motors Limited for the work to be carried out.

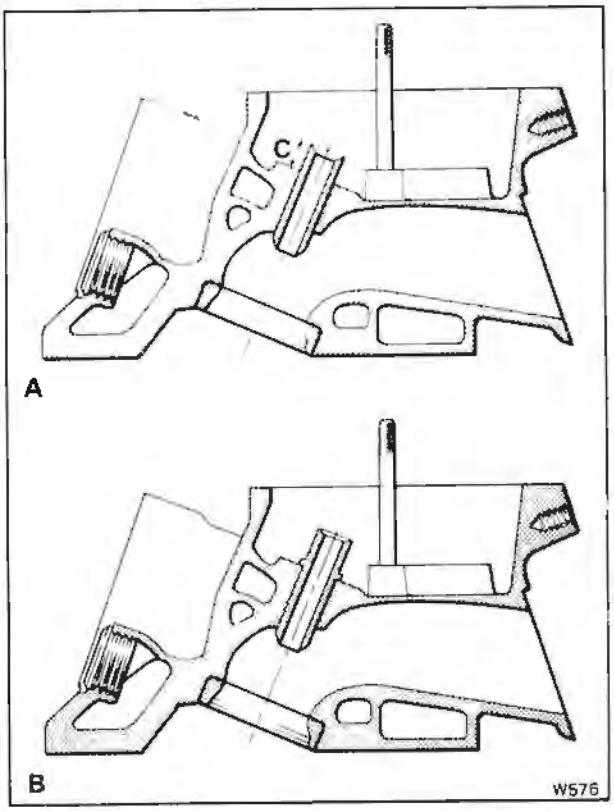

Fig. E39 Valve guides
A Early engines
B Late engines
C 18,796 mm. to 19,050 mm. (0.740 in. to 0.750 in.)

Decarbonising

Dismantling the engine

1. Carry out the usual workshop safety precautions.

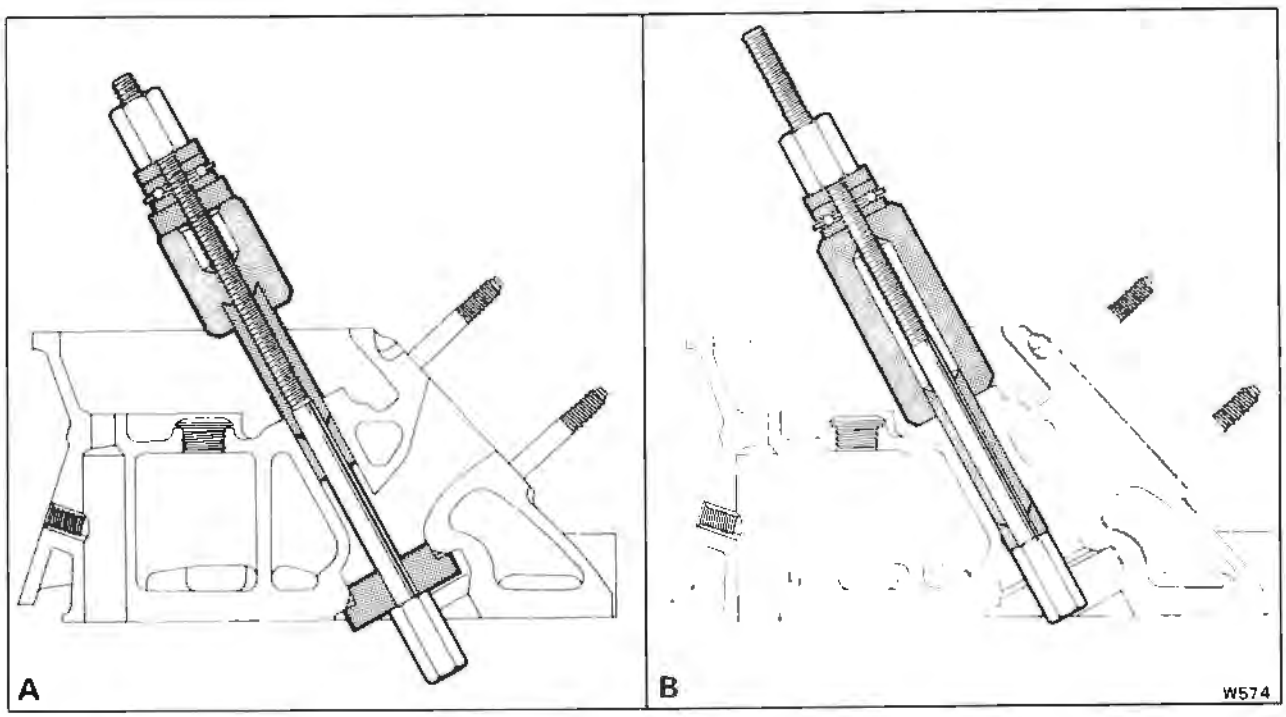

Fig. E38 Valve guide renewal
A Insertion
B Extraction

Printed in England
© Rolls-Royce Motors Limited 1982
August 1982
TSD 4200

2. Remove the cylinder heads (see Cylinder heads - To remove).
3. Remove the valves (see Valves - To remove). All components removed should be labelled so that they can be returned to their original position.

Removing the carbon
Carbon deposits form in the combustion chamber and affect the cylinder heads, valves and piston crowns.
1. Using a blunt tool, remove most of the carbon deposit from the cylinder heads, valves, piston crowns and the top face of the cylinder liners.
2. Complete the removal of the carbon deposit using a wire brush.

Take care not to damage the valve seats or to make heavy score marks in the piston crown and cylinder heads. Heavy score marks will quickly accumulate carbon and seriously impair engine performance.
3. Ensure that the carbon does not get into the crankcase coolant passages or oil drain holes.
4. Wash the cylinder head and valves in paraffin and dry with compressed air.

Valve guides - To inspect
1. With the aid of a new valve guide, examine the existing guides for wear.
2. The maximum permissible wear on the valve guides is given in Section E3, Dimensional data. If the wear tolerance is exceeded, the valve guides should be removed from the cylinder head and new ones fitted as described in Valve guides - To remove and fit.
3. 'Bellmouthing' at the bottom end of the valve guides is permissible within the tolerances specified in Section E3, Dimensional data.
4. Check for clearance in the bore between each valve stem and its respective guide. The maximum permissible clearance is given in Section E3, Dimensional data.

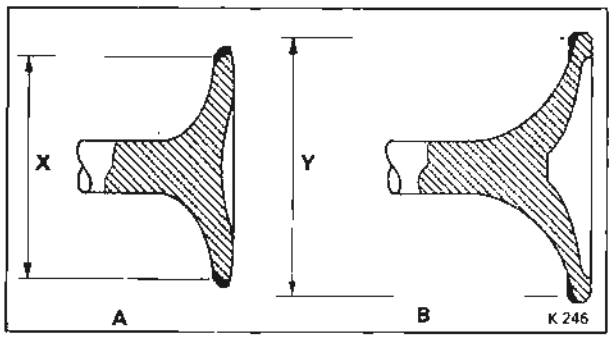

Fig. E40 Valve seat dimensions
A Exhaust
B Inlet
X 3,576 cm. to 3,58 cm. (1.408 in. to 1.412 in.)
Y 4,56 cm. to 4,58 cm. (1.775 in. to 1.805 in.)

Valve and valve seat inserts - To reface
1. Reface the valve seats and seat inserts using valve reconditioning equipment to give a seat angle of 45°.

When refacing the valve seats, remove the minimum amount of material possible to give a 'clean' seating, whilst maintaining the two dimensions shown in Figure E40.
2. If necessary, the valve seat inserts may be crowned with a 30° cutter to prevent 'pocketing'.
3. Renew the valve seat inserts if they are badly worn (see Valve seats - To remove and fit).
4. Using a fine, good quality lapping paste, lightly lap each valve to its seating. Check the seating using Prussian blue.
5. Wash the cylinder heads and the valves in paraffin to remove all grinding dust and lapping paste. Blow off the surplus paraffin with compressed air.
6. If new guides and valve seat inserts are fitted, the valve guides should be reamed before the valve seat inserts are faced.

Valve springs - To test
1. Visually examine the valve springs for defects and check the poundage of the springs on a valve spring tester.
2. Data for this test can be found in Section E3, Dimensional data.
3. The inlet valve springs are slightly shorter than the exhaust valve springs.

Assembling the engine
Assemble the engine by reversing the procedure given for removal, noting the following.
1. Use new gaskets.

It is important that the procedure given for fitting a new cylinder head gasket is correctly carried out.
2. Tighten all nuts and setscrews to the figures given in Chapter P.
3. If the engine is fitted with carburetter(s), tune as described in Chapter K or Chapter U.

Section E9

Crankcase breather system

Introduction

Crankcase emissions are controlled by a recirculatory closed breather system.

SU HIF7 Carburetters
An insulated draught tube connects the crankcase via the oil filler (fitted with a sealed cap), to the choke housing upstream of both the choke butterfly and the carburetters.

Solex 4A1 Carburetter
An engine breather tube connects the oil filler housing on 'B' bank cylinder head with the underside of the air intake cleaner assembly.

Cars destined for Australia, Japan and North America
refer to the appropriate section of Chapter U.

Maintenance

SU HIF7 and Solex 4A1 Carburetters
A flame trap capsule containing three wire mesh discs is fitted in a housing at the crankcase end of the breather tube.
1. Periodically clean the flame trap fitted to the breather pipe in the following manner.
2. Unscrew the setscrew securing the breather pipe connection to the oil filler pedestal; withdraw the connection from the pedestal (slight resistance may be felt due to the rubber 'O' ring connections).
3. Withdraw the connection from the pipe flange.
4. Wash the flame trap assembly in clean fuel, then dry with compressed air. The flame trap assembly consists of either 6 separate gauzes or 3 gauzes crimped together.

SU HIF7 Carburetters
5. To clean the adapter fitted to the choke housing, remove the single setscrew from the breather pipe end connection and detach the pipe.
6. Clean the adapter fitted to the choke housing and ensure that the holes in the adapter are clear.
7. Assemble the flame trap and breather pipe in the reverse order, ensuring that the 'O' rings are in good condition.

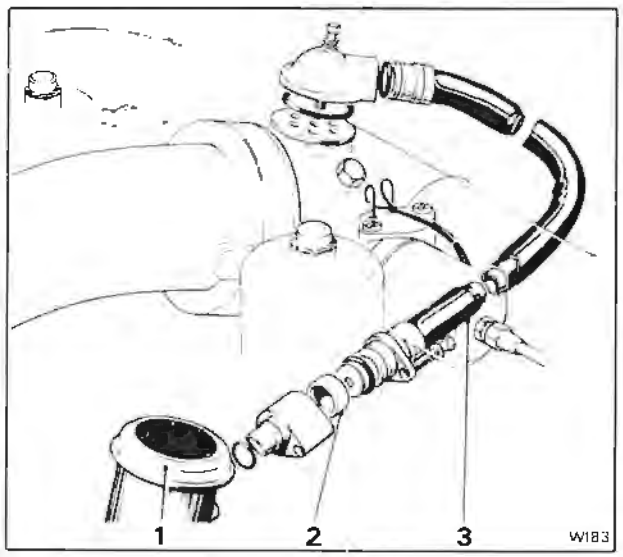

Fig. E41 Crankcase breather pipe
1 Oil filler housing
2 Flame trap
3 Breather tube

Printed in England
© Rolls-Royce Motors Limited 1981

Section E10

Engine lubrication system

Printed in England
© Rolls-Royce Motors Limited 1981

Oil pump - To remove

1. Drive the car onto a ramp and chock the road wheels to prevent the car from moving.
2. Carry out the usual workshop safety precautions.
3. Drain the cooling system (see Chapter L).
4. Drain the engine oil.
5. Remove the bonnet as described in Chapter S.
6. Remove the radiator grille.
7. Remove the coolant fan, viscous coupling assembly, radiator and header tank (see Chapter L).
8. Remove the exhaust downtake pipes. Refer to Chapter Q.
9. Using a jack, support the weight of the engine

Note
Do not support the weight of the engine under the front pulley.

10. Remove the nuts and washers securing the front engine mounting to the crossmember.
11. Remove the drive belts from the crankshaft pulley.
12. Disconnect the electrical wiring to the alternator, taking a careful note of the connections to ensure correct assembly.
13. Remove the nut, bolt and distance washer from the alternator adjusting strap.
14. Detach the alternator from its front and rear mounting points and remove.
15. Disconnect the alternator adjusting strut.
16. Disconnect the heater pipes from the coolant pump.
17. Disconnect the thermostat by-pass pipe at the coolant pump.
18. Remove the oil pressure gauge capacitor from the front lower casing.
19. Remove the setscrews securing the coolant pump to the crankcase, remove the coolant pump.
20. Discard the Neoprene seal which fits between the coolant pump and front lower casing.
21. Remove the lock-plate and setscrews securing the pulley and damper to the pulley drive flange; remove the pulley and damper.
22. Using the spanner (RH 7131), remove the serrated nut from the crankshaft.
23. Using the withdrawal tool (RH 7097), remove the pulley driving flange (see Fig. E44).
24. Remove the setscrews securing the front lower casing. Note that this casing is dowelled to the crankcase.
25. Detach the oil pipe connecting the pump to the filter intake ensuring that the rubber 'O' ring fitted at the filter end of the pipe is also removed.
26. Remove the setscrews securing the pump to the crankcase, withdraw the pump together with the dowel inserts.

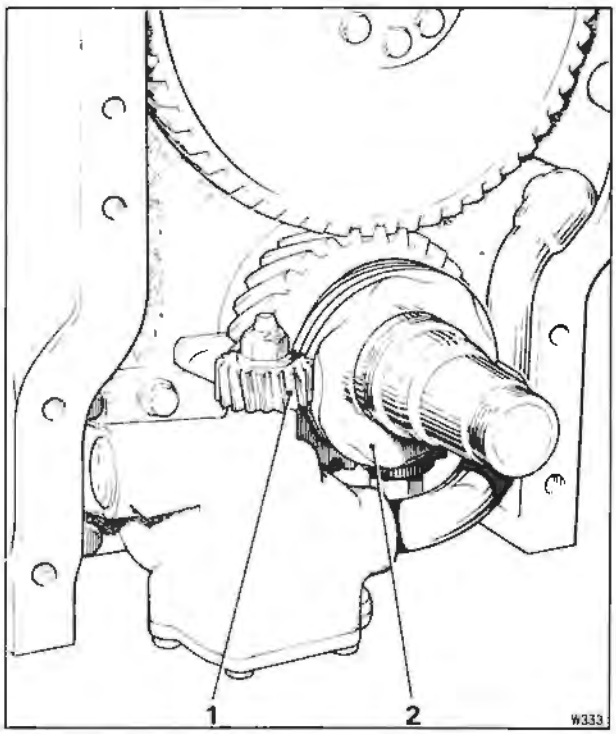

Fig. E42 View of oil pump in position
1 Oil pump driven gear
2 Oil pump drive gear

When withdrawing the oil pump, it may be necessary to turn the unit from side to side as it is removed.

Crankshaft oil pump driving gear - To remove

1. With the front engine cover removed from the crankcase use the special spanner (RH 7110) to remove the serrated nut from the crankshaft.
2. Remove the washer and the two oil flingers (if fitted).
3. The oil pump driving gear can now be withdrawn.

Oil pump - To test

The pump must be tested on a rig which has a variable orifice so that the oil delivery pressure from the pump can be restricted. The rig should also be able to drive the pump at a controlled speed and be capable of maintaining a constant temperature of 80°C. (176°F.) for the duration of the test. If these

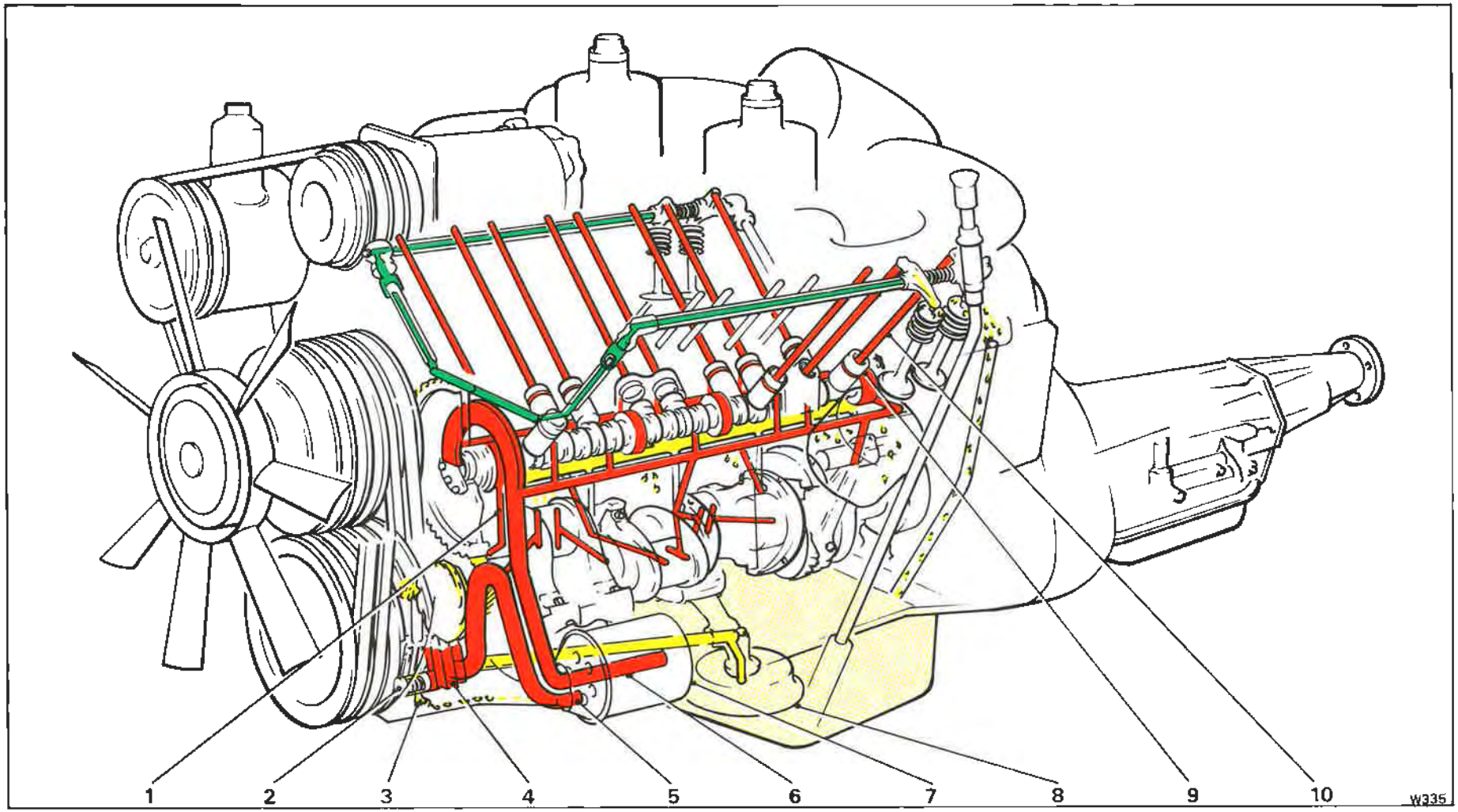

High pressure oil

Low pressure oil

Crankcase oil or splash

Fig. E43 Engine lubrication diagram

1 Oil jet to camshaft gear
2 Relief valve
3 Return to intake side of pump
4 Oil pump
5 Filter intake
6 Filter feed to oil gallery
7 Oil filter
8 Oil pick-up and strainer
9 Hydraulic tappet
10 Push rod

facilities are available, the pump should be tested as follows.

1. Drive the pump at 200 r.p.m. then adjust the variable orifice until the pump is delivering oil at 1,055 kgf/sq.cm. (15 lbf/sq.in.); with the orifice at this setting, the pump oil delivery should be at least 4,55 litres/min. (1 gal/min.).

2. Maintain the orifice at this setting then increase the pump speed to 1500 r.p.m. At this speed, the pump oil delivery should be at least 9,00 litres/min. (2 gal/min.) at 2,95 kgf/sq.cm. (42 lbf/sq.in.). The oil pump relief valve should blow at approximately 2,96 kgf/sq.cm. (42 lbf/sq.in.).

If the performance of the pump does not conform to these figures, proceed as follows.

3. Examine the working face of the pump cover and if necessary, remove light wear marks by machining.

4. Compare the pump clearance with the figures given in Section E3, Dimensional data. If necessary renew the pump casing and fit a new matched set of gears.

5. If the condition of the pump is poor, the complete pump should be renewed.

Oil pump - To dismantle (see Fig. E45)

1. Hold the external driving gear in a suitable fixture, taking care that sufficient protection is provided to ensure that the teeth of the gear are not damaged.

2. Remove the split pin, nut and washer securing the driving gear to the driving shaft then carefully withdraw the gear. Remove the Woodruff key from the shaft.

Unscrew the six setscrews from the end cover; remove the cover together with the two gears from the casing.

Oil pump - To assemble

Assemble the oil pump by reversing the procedure given for dismantling noting the following.

1. Examine all working parts for wear and inspect the end cover and casing for distortion; renew if necessary. If the end cover is lightly scored the marks may be removed by machining.

2. Assemble the oil pump then check that the end-float in the gears and backlash between the pump driving gear and the driven gear is correct (see Section E3, Dimensional data).

3. Torque tighten the setscrews, nuts and bolts to the figures specified in Chapter P.

Oil pump - To fit

Fit the oil pump by reversing the procedure given for removal, noting the following.

1. Always ensure that the oil pump driven gear is of different material to the drive gear on the crankshaft. One should be bronze and the other steel.

Under no circumstances should gears of like metals be fitted.

If a new oil pump driven gear is to be fitted, also fit a new oil pump driving gear to the crankshaft.

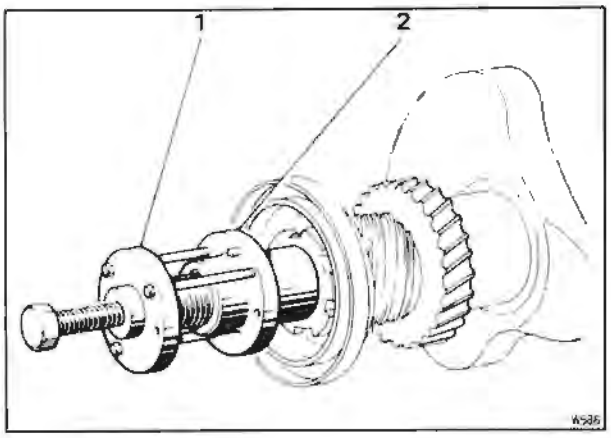

Fig. E44 Withdrawing the crankshaft front flange
1 Withdrawal tool (RH 7097)
2 Pulley driving flange

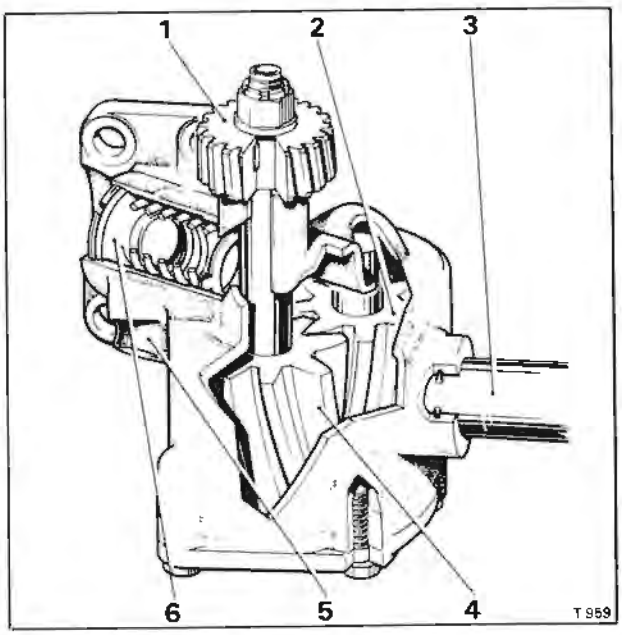

Fig. E45 Cut-away view of oil pump
1 Crankshaft driven gear
2 Oil pump driven gear
3 Oil filter delivery pipe
4 Oil pump driving gear
5 Oil pump body
6 Relief valve

2. Ensure that all setscrews, nuts and bolts are torque tightened to the figures specified in Chapter P.

3. Ensure that the backlash between the driving gear on the crankshaft and the gear on the pump is correct (refer to Section E3, Dimensional data and refer to Fig. E46).

4. When fitting the setscrews securing the pump to the engine, ensure that the dowel inserts are fitted to the holes from which they were removed.

Printed in England
© Rolls-Royce Motors Limited 1981
September 1981
TSD 4200

5. The filter delivery pipe is held in position by means of a rubber pad attached to the front cover. Ensure that this pad is in position before fitting the cover. Renew the delivery pipe 'O' rings.
6. Fit new joints to the lower front cover and the oil pump facing. If the front cover to sump joint is damaged or in a poor condition it will be necessary to remove the sump to enable a new joint to be fitted (see Section E6, Connecting rod bearings - To remove.

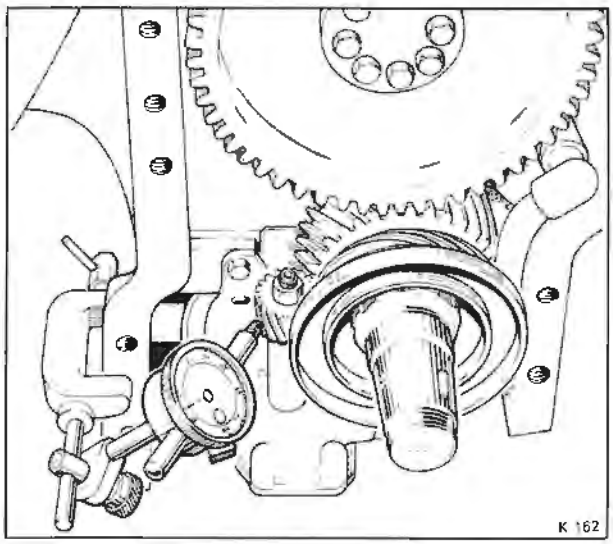

Fig. E46 Checking backlash on the oil pump gears

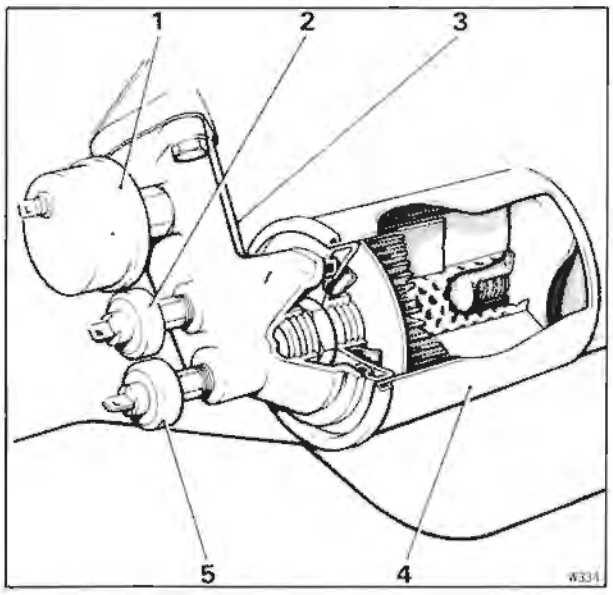

Fig. E47 Oil filter elbow and filter assembly
1 Oil pressure transmitter (facia oil gauge)
2 Oil pressure switch (warning lamp)
3 Oil filter elbow
4 Oil filter
5 Oil pressure switch [fuel pump(s) relay]

7. Set the engine mounting stop plate gap; this procedure is fully described in Section E12, Engine - To fit.
8. Renew the Neoprene seal between the coolant pump casing and the lower front cover and also the coolant pump 'O' rings.
9. Examine all coolant hoses for deterioration; replace any that are unserviceable.
10. Ensure that the driving belts are adjusted to the correct tension (see Chapter L).
11. Replenish the cooling system with the correct anti-freeze mixture.
12. Fill the engine with an approved oil (see Engine oil, Sump - To fill).

Oil filter canister - To renew (see Fig. E47)
1. Drain the oil from the engine by carrying out Operations 1 to 8 inclusive, under the heading Engine oil, Sump - To drain.
2. Position a suitable container beneath the oil filter.
3. Support the filter and unscrew, using a suitable strap spanner.
4. Pour the old oil away and discard the filter canister.
5. Examine the new canister to ensure that it is a suitable approved replacement and that the rubber sealing ring is positioned correctly.
6. Lightly smear the sealing ring with clean engine oil.
7. Fit the new canister and tighten, using hand pressure.

Oil pressure transmitter (facia oil gauge) - To assemble
To obtain an accurate oil pressure reading, it is essential that the oil pressure transmitter is correctly assembled to the crankcase oil filter adapter.

The transmitter should be fitted so that the lucar connection is towards the top and within 30° either side of the vertical datum.

The correct position of the transmitter can be achieved by fitting an additional copper washer to the threaded union (see Fig. E47).

Oil level sender unit - To replace
1. Disconnect the battery.
2. Before removing the unit which is fitted into the side of the sump, drain the sump oil (see Engine oil, Sump - To drain).
3. Remove the heatshield.
4. Disconnect the electrical leads from the unit, unscrew the six setscrews and remove the unit.
5. Always fit a new joint between the sender and the sump face before replacing an existing unit or fitting a new one.
6. Ensure that the spring washers are fitted to the securing setscrews and the heatshield is replaced.
7. Fill the sump with oil. Refer to Engine oil, Sump - To fill.

Engine oil

Sump - To drain

1. Position the car on a ramp and carry out the usual workshop safety precautions.
2. Raise the ramp.
3. Position a suitable container beneath the sump drain plug.
4. Clean the drain plug, sealing washer and a small area of the sump around the drain hole.
5. Unscrew the drain plug, collect the aluminium sealing washer and allow the oil to drain into the container.
6. Examine the condition of the aluminium sealing washer and renew if necessary.
7. Ensure that the plug and washer seating area on the sump is both clean and dry.
8. Fit the sealing washer and plug to the sump and tighten.
9. Fit a new oil filter canister if necessary by carrying out Operations 2 to 7 inclusive, under the heading Oil filter canister - To renew.

Sump - To fill

It is most important that only engine oil of an approved grade and manufacture is used.

10. Raise the bonnet and open the filler cap.
11. Pour 8,4 litres (14.8 Imp. pts., 17.7 U.S. pts.)of fresh approved oil into the system via the filler, 9,4 litres (16.5 Imp. pts., 19.8 U.S. pts.) if the filter has been changed.
12. Check the oil level by carrying out Operations 13 to 17 inclusive.

Sump - Oil level to check

The vehicle must be standing on level ground and the engine switched off.

13. Allow at least four minutes for the oil to drain into the sump.
14. Withdraw the engine oil dipstick and wipe it clean.
15. Insert the dipstick into its position.
16. Withdraw the dipstick and read the oil level. Maximum and minimum oil level marks are indicated on the dipstick.
17. Top-up the oil level if necessary by carrying out Operations 18 to 21 inclusive.

Sump - To top-up

It is most important that only engine oil of an approved grade and manufacture is used.

18. Carry out Operations 13 to 16 inclusive.
19. If necessary, top-up by pouring a small quantity of fresh engine oil through the filler.
20. Repeat Operations 13 to 19 inclusive until the oil level reaches the maximum (MAX) mark on the dipstick.
Do not overfill with oil.
21. After topping-up ensure that the filler cap and bonnet are properly closed.

Important

(a) Do not operate the engine if the oil level is below the MIN mark on the dipstick. Failure to observe this precaution could result in serious damage to the engine.
(b) If the filter canister and/or the sump drain plug have been disturbed, check for oil leaks from around the two components, as soon as possible after the engine has been started.

Printed in England
© Rolls-Royce Motors Limited 1981
December 1980
TSD 4200

Section E11

Hydraulic systems pumps

The two pumps are attached to the tappet chest cover and are activated by camshaft operated push rods. The pumps are fed from the hydraulic reservoirs and in turn supply the fluid under pressure to the braking and height control systems of the car.

Hydraulic pumps and push rod guides - To remove

1. Carry out the usual workshop safety precautions.
2. Remove the carburetters and induction manifold (see Section E8, Cylinder heads - To remove).
3. Progressively unscrew the setscrews securing the tappet chest cover to the crankcase. The setscrews must be removed in this manner to lift the cover evenly. If the hydraulic pump operating cam is on its peak, distortion of the tappet chest cover could occur if the setscrews are not unscrewed evenly.
4. Remove the hydraulic pumps (see Chapter G).
5. From the underside of the tappet chest cover tap back the tabs of the lock washers.
6. Unscrew the setscrews securing the push rod guides. Collect the lock washers.
7. Remove the guides. Collect the shims (if fitted) as the pump flange is detached.

Push rod guides - To dismantle and assemble (see Fig. E48)

1. Slide the push rod through the hole in the guide flange.
2. Press the cam follower into the centre chamber of the guide and lift out.
3. Discard the 'O' ring.
4. Examine the components for wear.
5. Clean the groove in the cam follower and fit a new 'O' ring.
6. Wash all components in clean paraffin.
7. Assemble the components by reversing the dismantling procedure.

Hydraulic pumps and push rod guides - To fit and adjust

1. Clean the mating faces of the tappet chest cover and crankcase.
2. Fit the push rod guide assemblies to the underside of the cover.
3. Fit the pump flange and shims. Secure into position.
4. To check that the push rods are set correctly, carry out the following operations.
5. Rotate the camshaft until the hydraulic pump eccentrics are at approximately B.D.C.

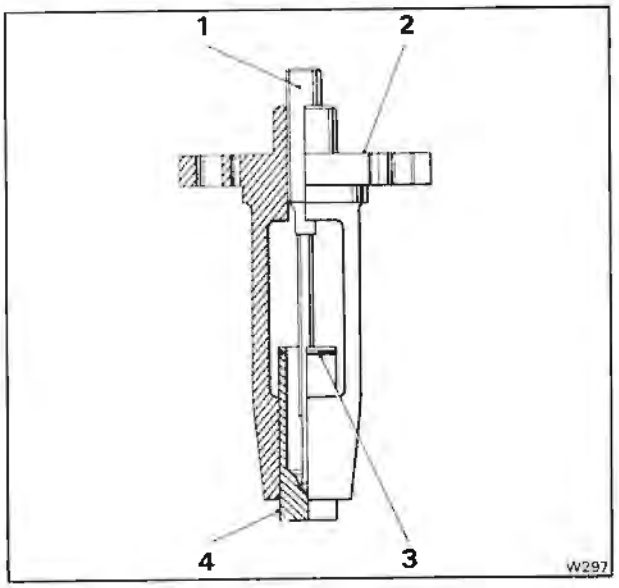

Fig. E48 Hydraulic pump push rod assembly
1 Push rod (mineral oil rod)
2 Guide
3 'O' ring
4 Cam follower

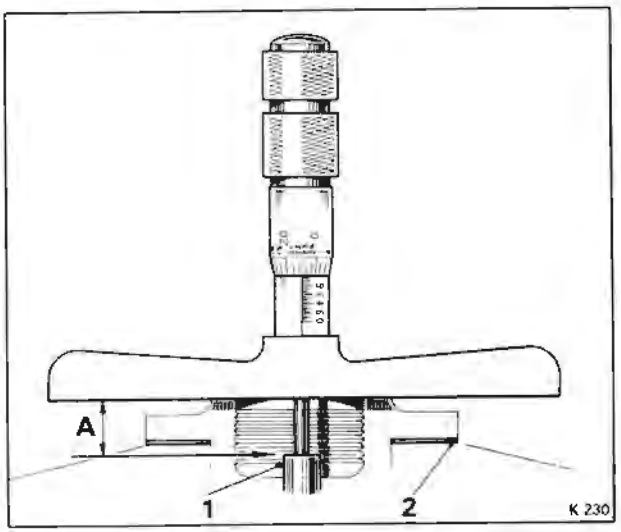

Fig. E49 Checking the position of the hydraulic pump push rod
1 Push rod
2 Shims
A Depth micrometer measurement

Printed in England

© Rolls-Royce Motors Limited 1981

6. Temporarily fit the tappet cover and progressively tighten the setscrews.
7. Rotate the engine to find the exact B.D.C. position of the hydraulic pump push rod.
8. Using the depth micrometer placed across the pump flange measure the dimension to the top of the push rod (see Fig. E49). This dimension should be between the figures quoted in Section E3, Dimensional data.
9. If the dimension is incorrect it will be necessary to alter the shims under the pump mounting flange (see Fig. E49). The shims are available in two sizes, refer to Section E3, Dimensional data.
10. To alter the number of shims, carry out the following operations.
11. Remove the tappet cover.
12. Unscrew the two setscrews which secure the push rod guide to the hydraulic pump flange. Remove the guide and flange together with the shims.
13. Care should be taken to ensure that no dirt or any other foreign matter is allowed to come into contact with the exposed components, especially the eccentrics or the cam face of the follower.
14. Add or subtract the necessary shim washers.
15. Secure the push rod guide, shims and pump flange to the tappet cover.
16. Fit the assembled tappet cover to the engine and progressively tighten the setscrews. A flat washer is fitted under the head of each setscrew.
17. Using a depth micrometer confirm that the dimension from the pump flange to the top face of the push rod is correct (see Fig. E49).
18. Fit the brake pump into position (see Chapter G, Section G6).
19. Fit the tappet chest cover (see Section E7, Camshaft and Valve mechanism).

Section E12

Engine removal and installation

Printed in England
© Rolls-Royce Motors Limited 1981
December 1980
TSD 4200

Before attempting to remove the engine, reference should be made to Chapter G, Section G2 or G2m - Special precautions. The appropriate section should be read carefully, so that details of the different types of hydraulic system and the relevant work (depressurising the system, removing the necessary hydraulic pipes, etc.,) are understood.

The operations listed in this section are the basic steps to be followed in removing the engine, and should enable the skilled mechanic to carry out the exercise. However, the sequence of the operations may be varied slightly as the operator becomes more familiar with the work.

Whenever an operation states a simple objective and then refers to another chapter [e.g. Drain the cooling system (see Chapter L)], it should be noted that the full procedure to carry out the operation will be found within that particular chapter.

It should also be noted that as engine specifications can vary dependent upon the destination of the car, it is always advisable to check that all cables, looms, pipes, etc., have been disconnected before lifting the engine out of the vehicle.

The information given in this section refers to the removal of the engine through the bonnet aperture. However, should it be necessary to remove the sub-frame, the engine may be removed complete with the transmission and sub-frame from underneath the car. This method of engine removal is detailed in Chapter H, Sub-frames and Suspension.

Engine - To remove

1. Drive the car onto a ramp.
2. Carry out the usual workshop safety precautions.
3. Chock both the front and rear road wheels.
4. Raise the bonnet and fit the wing covers (RH 2684) and liners (RH 2685).
5. Remove the bonnet (see Chapter S).
6. Drain the cooling system (see Chapter L).
7. Depressurise the hydraulic systems (see Chapter G).
8. Disconnect the battery leads.
9 Drain the engine oil (see Section E10).
10. Discharge the refrigeration system (see Chapter C).
11. Remove the radiator top hose and disconnect the bottom radiator hose from the engine. Blank the open connections.

If the engine is not to be replaced straight away, half-fill the radiator with coolant.

12. Remove the radiator header tank and the top half of the fan cowl (see Chapter L).
13. Position a sheet of thin foam rubber on the engine side of the radiator matrix.
14. Remove the viscous fan assembly from the coolant pump pulley (see Chapter L) and withdraw it upwards from the engine compartment.
15. Remove the air intake hose (see Chapter K). Blank the open connections.
16. Support the weight of the exhaust system at the front silencer/catalytic converter. Remove the exhaust system balance pipe and downtake pipes (see Chapter Q).
17. Disconnect and remove the exhaust gas recirculation (E.G.R.) feedpipe (if fitted).
18. Position a jack under the rear of the engine sump. Place a piece of wood between the head of the jack and the sump. Take the weight of the engine.
19. Remove the transmission (see Chapter T).
20. Remove the four nuts and bolts securing the engine rear mountings to the transmission adapter housing.
21. Remove the starter motor.
22. Remove the setscrews securing the transmission adapter housing to the engine and withdraw the housing.
23. Disconnect the fuel pipes (see Chapter K or U). Blank the open connections.
24. Disconnect the fuel evaporative and/or the weakener system hoses (see Chapter K or U).
25. Disconnect the accelerator linkage at the long rod and detach the isolator trapeze from the body.
26. Detach the pipes from the rear of the refrigeration compressor. Blank the open connections to prevent the ingress of dirt.
27. Temporarily clamp the two low pressure hydraulic hoses from the reservoirs to the pumps. Detach the hose from each pump and suitably blank the open connections. Secure each blank using the hose retaining clip. Release the clamp.
28. Disconnect the two high pressure hydraulic hoses that connect the accumulators to the body.
29. Temporarily clamp the two accumulators low pressure return to reservoir hoses. Detach the hoses and suitably blank the open ends. Secure each blank using the hose retaining clip. Release the clamp.
30. Disconnect the main battery lead to the starter. Free the clip that retains the cable to the starter solenoid.
31. Disconnect the starter motor to the body earth braid.
32. Using a syringe remove the oil from the steering pump. Disconnect the cooler to pump hose adjacent to the pump. Disconnect the pump to the steering unit hose at the steering unit.
33. Disconnect the two heater hoses situated below the alternator.
34. Locate the engine loom where it leaves the

engine at the rear of 'A' bank rocker cover. Trace along the loom and free it from the securing clips. Detach the engine loom from its connections below the right-hand blower motor, label each connection to assist identification.

On cars fitted with a fuel injection system detach the additional connection situated below the left-hand blower motor.

Ensure that all loom connections (including the transmission loom) are stored on the engine.

35. Detach the two earthing strips from the bonnet catches.

36. Position suitable slings around the front and rear of the engine. **Ensure that the front sling is not positioned under the front pulley or damper.**

37. Connect the slings to suitable lifting equipment and take the weight of the engine.

38. Disconnect the engine front mounting.

39. Check to ensure that no wires, cables, pipes, etc., remain connected to the engine.

40. Carefully lift the engine upwards and slightly forwards checking to ensure that it does not foul any point of the engine compartment.

41. Continue to carefully lift the engine out of the vehicle. Once it is clear, lower it down onto a suitable stand and secure it in the upright position.

Engine - To fit

Fit the engine by reversing the procedure given for removal, noting the following.

1. When lowering the engine into position, ensure the flywheel assembly and rear of the engine do not become trapped against the rear crossmember of the front sub-frame.

Also ensure that the sump fits into the space between the steering rack pipes and the sub-frame.

2. With the engine front mounting setscrews slack, adjust the position of the engine mounting stop plate so that there is a gap of 1,524 mm. (0.060 in.) between the bonded rubber strip on the stop plate and crossmember stop bracket (see Fig. E50). The stop plate has elongated holes to allow adjustment.

3. Connect all pipes, hoses and cables as described in the relevant chapters.

4. Fill all necessary systems with fluids as described in the relevant chapters.

5. Immediately the engine starts for the first time, inspect for obvious leaks. Whilst the engine is warming-up carry out a more detailed inspection of all pipes, hoses and joints for leaks.

6. After the engine is fully warmed-up check all fluid levels and correct as necessary.

7. Road test the vehicle and make any minor adjustments that are found necessary.

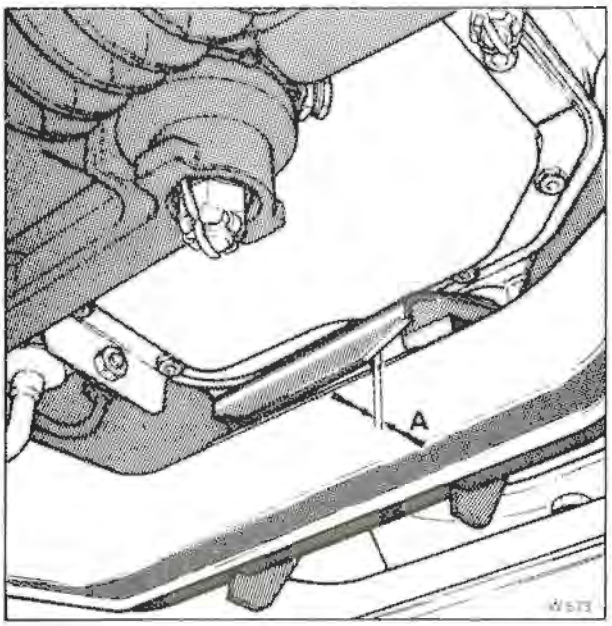

Fig. E50 Setting the stop plate gap
A Stop plate gap

Section E13

Fault diagnosis

Symptoms	Possible cause
1. Engine fails to start (starter motor inoperative).	1. (a) Gear range selector out of 'Neutral' or 'Park' position (b) Ignition fuse blown. (c) Battery discharged. (d) Break or high resistance in battery connections and starter relay connections. (e) Auxiliary starter relay faulty. (f) Faulty starter motor.
2. Engine fails to start (starter motor operates but fails to turn engine).	2. (a) Battery discharged. (b) Faulty starter motor circuit (refer to Chapter M). (c) Faulty starter motor. (d) Faulty starter solenoid (refer to Chapter M).
3. Engine fails to fire.	3. (a) No fuel delivered to engine (refer to Chapter K and/or Chapter U). (b) Faulty ignition system (refer to Chapter M). (c) Excess fuel in engine (refer to Chapter K and/or Chapter U). (d) Incorrect metering of fuel (refer to Chapter K and/or Chapter U).
4. Poor engine idling.	4. (a) Incorrect metering of fuel (refer to Chapter K and/or Chapter U). (b) Incorrect ignition timing (refer to Chapter M). (c) Air leaks in induction system (refer to Chapter K and/or Chapter U). (d) Air leaks in exhaust system on engines fitted with a fuel injection system (refer to Chapter U).
5. Incorrect engine idle speed.	5. (a) Incorrect metering of fuel (refer to Chapter K and/or Chapter U). (b) Throttle controls sticking (refer to Chapter K and/or Chapter U). (c) Air leaks in induction system (refer to Chapter K and/or Chapter U).
6. (i) Irregular running. (ii) Engine misfires.	6. (a) Faulty sparking plug(s) (refer to Chapter M and/or Chapter U). (b) Faulty ignition system (refer to Chapter M and/or Chapter U). (c) Air leaks in induction system (refer to Chapter K and/or Chapter U). (d) Air leaks in exhaust system on engines fitted with a fuel injection system (refer to Chapter U). (e) Incorrect metering of fuel (refer to Chapter K and/or Chapter U). (f) Inlet and exhaust valves not seating correctly (refer to Section E8). Examine valve seats and springs. (g) Defective cylinder head gasket(s) (refer to Section E8). Examine the cylinder head gasket(s).
7. Loss of power.	7. (a) Faulty sparking plug(s) (refer to Chapter M and/or Chapter U). (b) Faulty ignition system (refer to Chapter M and/or Chapter U). (c) Air leaks in induction system (refer to Chapter K and/or Chapter U). (d) Air leaks in exhaust system on engines fitted with a fuel injection system (refer to Chapter U). (e) Blocked air cleaner filter (refer to Chapter K and/or Chapter U). (f) Incorrect metering of fuel (refer to Chapter K and/or Chapter U). (g) Throttle linkage sticking or incorrectly adjusted (refer to Chapter K and/or Chapter U).

Printed in England
© Rolls-Royce Motors Limited 1981

Symptoms	Possible cause
7. Loss of power (continued).	(h) Worn or burnt valves. Broken or weak valve springs (refer to Section E8). (i) Defective cylinder head gasket(s) (refer to Section E8).
8. Engine 'spits back'.	8. (a) Incorrect metering of fuel (refer to Chapter K and/or Chapter U). (b) Inlet valves not seating correctly (refer to Section E8). (c) Incorrect grade of fuel. (d) Faulty ignition system (refer to Chapter M and/or Chapter U). (e) Heavily carboned engine.
9. Engine 'runs on' (diesels).	9. (a) Engine overheating. (b) Faulty ignition timing. (c) (i) **S.U. HIF7 Carburetters** Faulty weakening system (refer to Chapter K and/or Chapter U). (ii) **Fuel injection system** Refer to Chapter U.
10. Detonations in silencer.	10. (a) Incorrect metering of fuel (refer to Chapter K and/or Chapter U). (b) Faulty ignition system (refer to Chapter M and/or Chapter U). (c) Air leaks in exhaust system (refer to Chapter Q and/or Chapter U). (d) Faulty temperature controlled air intake system (refer to Chapter K and/or Chapter U). (e) Exhaust valve(s) sticking (refer to Section E8).
11. Overheating.	11. (a) Loss of coolant. (b) Faulty thermostat. (c) Broken or slipping drive belt. (d) Faulty coolant pump. (e) Weak fuel/air mixture. (f) Inadequate engine lubrication. (g) Faulty ignition system (refer to Chapter M and/or Chapter U). (h) Blocked cooling system. (i) Restricted air flow through matrix.
12. Low oil pressure.	12. (a) Inadequate oil supply. (b) Low oil level in sump (see Section E10). (c) Defective oil pressure gauge. (d) Worn or defective oil pump (see Section E10). (e) Blocked oil pick-up strainer. (f) Defective seal(s) on oil pick-up assembly. (g) Defective seal(s) in main oil galleries (core plugs). (h) Engine overheating.
13. Excessive fuel consumption.	13. (a) Leaks from fuel system. (b) Incorrect metering of fuel (refer to Chapter K and/or Chapter U). (c) Blocked air cleaner filter (refer to Chapter K and/or Chapter U). (d) Faulty ignition system (refer to Chapter M and/or Chapter U). (e) Loss of engine cylinder compression.

Section E14

Workshop tools

Tool Number	Description
RH 2684	Wing cover set
RH 2685	Wing cover liners
RH 7094	Valve spring compressor
RH 7095	Extractor - cylinder liner
RH 7097	Extractor - front pulley driving flange
RH 7110	Spanner - crankshaft serrated nut (small)
RH 7126	Spanner - cylinder head nuts
RH 7131	Spanner - crankshaft serrated nut (large)
RH 7200	Base - valve spring compressor
RH 7207	Extraction and Insertion tool - inlet and exhaust valve guides
RH 7208	Extractor - main bearing caps
RH 7272	Guide block
RH 7498	Extractor attachment - main bearing caps
RH 7825	Reamer - inlet and exhaust valve guides
RH 7827	Tipped reamer - inlet and exhaust valve guides
RH 8141	Extractor - oil pump driven gear
RH 8428	Spanner - hydraulic brake pumps serrated nut
RH 9646	Insertion tool - crankshaft rear seal
RH 9655	Protective sleeve - crankshaft rear seal

Printed in England

© Rolls-Royce Motors Limited 1981

Chapter F

Propeller shaft

Section
F1 Propeller shaft

Printed in England

© Rolls-Royce Motors Limited 1977

December 1977

T.S.D. 4200

Chapter F

Issue record sheet 1

December 1977

The dates quoted below refer to the issue date of individual pages within this chapter.

Section	F1
Page No.	
1	Dec 77
2	Dec 77
3	
4	
5	
6	
7	
8	
9	
10	
11	
12	
13	
14	
15	
16	
17	
18	
19	
20	
21	
22	
23	
24	
25	
26	
27	
28	
29	
30	
31	
32	
33	
34	
35	
36	
37	
38	
39	
40	
41	
42	
43	
44	
45	
46	
47	
48	

Printed in England
© Rolls-Royce Motors Limited 1977

Section F1

Propeller shaft

Introduction
The single piece propeller shaft incorporates resonance dampers. A universal joint is fitted to each end of the shaft and the whole assembly is dynamically balanced to 9,00 gm. cm. (0.125 oz. in.) at a speed of 3000 r.p.m.

If the propeller shaft is dismantled and new universal joints fitted the propeller shaft should be balanced after assembly.

When balancing is not possible all parts should be correlated before dismantling so that on assembly any change to propeller shaft balance is kept to a minimum.

If required a fully balanced assembly can be obtained as a service exchange unit.

Propeller shaft - To remove
1. Drive the car onto a ramp. Securely chock the road wheels and raise the ramp to a convenient height.
2. On cars with grass fire shields fitted to the exhaust system, remove the shields from the area around 'A' bank front and intermediate silencers (see Chapter Q Exhaust systems).
3. Remove the two mounting bolts securing the front vibrashock mounting bracket to the centre body member (see Figs.1 and 2).
4 Detach the 'A' bank exhaust system front and intermediate silencers at the joints situated forward of the front silencer and at the rear of the intermediate silencer. Also detach the clamp on the intermediate balance pipe (see Chapter O Exhaust system).
5. Withdraw this section from the remainder of the exhaust system.
6. Ensure that the parking brake is in the off position.
7. Unhook the parking brake return spring from the operating lever. Remove the split pin and clevis pin from the pivot point in the end of the operating lever.
8. On left-hand drive cars, remove the front cable mounting bracket situated on the front face of the centre body crossmember (see Fig. F2).
9. Disconnect the front exhaust silencer heat shield stay from the centre body member.
10. Remove the bolts securing the rear brake cable abutment bracket to the body.
11. On cars fitted with catalytic converters, remove the small heat shield protecting the brake cable end rubbers.
12. On Convertible cars, remove the closing plate from the propeller shaft tunnel.
13. Remove the securing bolts from both sides of the centre body crossmember section and free the assembly. The centre section, together with the parking brake pivot mounting brackets and lever should be moved to the side of the car, but must be suitably supported to avoid any strain or kinking of the parking brake cables. Under no circumstances should the centre crossmember be allowed to hang on the parking brake cables.
14. Switch on the ignition and engage the 'N' neutral position on the gear range selector lever. Switch off the ignition.
15. Raise a rear wheel of the car to enable the propeller shaft to be revolved.
16. Correlate the propeller shaft flanges to the final drive pinion flange and the automatic transmission output flange.
17. Support the propeller shaft and remove the bolts and nuts from the front and rear propeller shaft flanges.

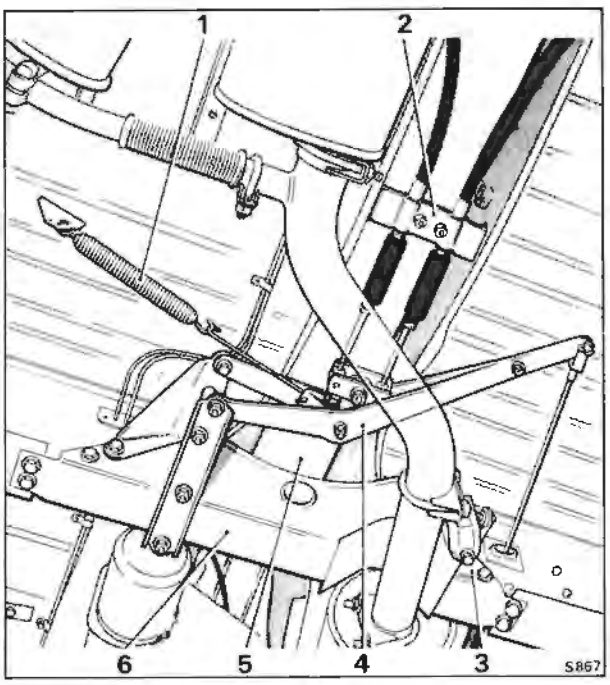

Fig. F1 **Centre crossmember and parking brake linkage. Right hand drive car.**
1 Return spring
2 Abutment bracket
3 Vibrashock mounting bracket
4 Operating lever
5 Propeller shaft
6 Removable centre body crossmember

Printed in England
© Rolls-Royce Motors Limited 1977
December 1977
T.S.D. 4200

18. Lower the propeller shaft front end; remove it by moving the shaft forward and downward through the rear crossmember aperture.

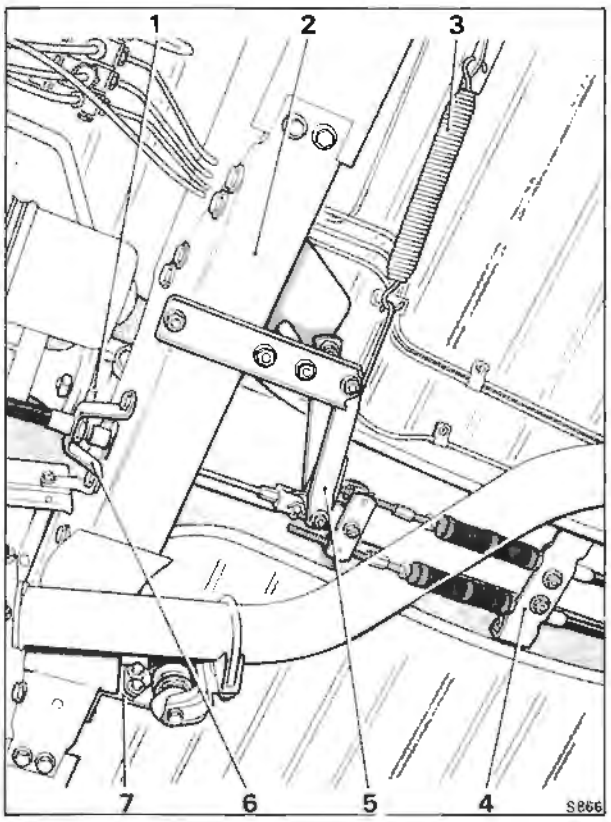

Fig. F2 Centre crossmember and parking brake linkage. Left hand drive car
1 Propeller shaft flange bolts
2 Removable centre body crossmember
3 Return spring
4 Abutment bracket
5 Operating lever
6 Mounting bracket - Front brake cable
7 Vibrashock mounting bracket

Universal joint - To dismantle
If a universal joint becomes unserviceable it must be dismantled and a new joint fitted.
1. Clean and remove any paint from the yoke eyes.
2. Correlate the flanged yokes to the shaft.
3. Remove the circlips retaining the needle roller bearings.
Note
Due to circlips of varying thickness having been fitted, care should be taken to ensure that the circlips are refitted to their original locations. If new circlips are fitted they should be of the same thickness as those they replace.
4. Using a nylon mallet, tap the yoke until the bearing races are driven out of the yoke eyes.

Universal joint - To assemble
1. Insert the cross-piece and seals into the yoke eyes. Hold the cross-piece centrally and carefully press the needle roller bearing assemblies into the yoke eyes until it is possible to fit the circlips. If this is found difficult to accomplish due to pressurisation, release the grease nipple situated between two of the cross-piece trunnions thus allowing the trapped air to bleed.
2. Fit the circlips.
3. If necessary tighten the grease nipple.

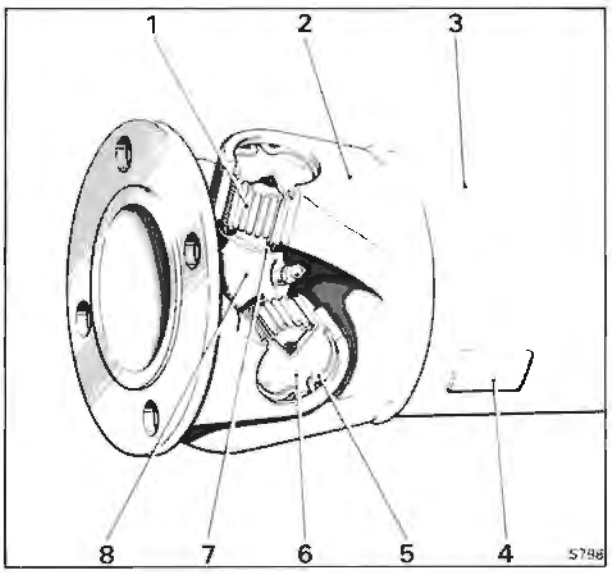

Fig. F3 Propeller shaft universal joint
1 Needle roller bearings
2 Yoke
3 Centre tube
4 Balance weight
5 Circlip
6 Bearing retainer
7 Rubber seal
8 Cruciform

Propeller shaft - To fit
Reverse the procedure given for removal noting the following points.
1. The joint faces must be clean and free from damage. The tightness for the flange bolts must be between 5,80 kgf.m. and 6,22 kgf.m. (42 lbf.ft. and 45 lbf.ft.)
All other nuts and bolts must be torque tightened in accordance with the figures quoted in Chapter P Torque tightening figures.
2. Before refitting the exhaust system reference should be made to Chapter Q Exhaust system.
3. Check the parking brake operation and adjust if necessary.

Chapter G

Hydraulic systems

This chapter is in two parts. Part I covers cars fitted with hydraulic systems using Castrol RR363 brake fluid. Part II covers cars fitted with systems using hydraulic system mineral oil (LHM).

Care should be taken before commencing work on a car hydraulic system to determine the type of system fitted.

Part I - Castrol RR363 brake fluid
Applicable to Silver Shadow II, Bentley T2 Silver Wraith II, Corniche and Camargue cars prior to car serial number 50 000

Part II - Hydraulic system mineral oil (LHM)
Applicable to Corniche and Camargue cars from serial number 50 001

Printed in England
© Rolls-Royce Motors Limited 1979
February 1979
T.S.D. 4200

Chapter G

Part I
Hydraulic systems
Castrol RR363 brake fluid

Applicable to Silver Shadow II, Bentley T2, Silver Wraith II, Corniche and Camargue cars prior to serial number 50 000

Section

G1 Introduction
G2 Special precautions
G3 Hydraulic system pipework
G4 Bleeding the hydraulic systems
G5 Hydraulic fluid reservoir
G6 Hydraulic pumps
G7 Hydraulic accumulators
G8 Deceleration conscious pressure limiting valve
G9 Brake distribution valves
G10 Brake actuation linkage assembly
G11 Solenoid and restrictor valves
G12 Height control valves
G13 Height control rams
G14 Pressure switches
G15 Front and rear disc brakes
G16 Parking brake linkage
G17 Fault diagnosis

Castrol
RR363
Brake Fluid

Printed in England

© Rolls-Royce Motors Limited 1979

February 1979

T.S.D. 4200

Chapter G Part I

Issue record sheet 1

February 1979

The dates quoted below refer to the issue date of individual pages within this chapter.

Section	Fold out	G1	G2	G3	G4	G5	G6	G7	G8	G9	G10	G11
Page No.												
1	Jul 78	Feb 79	Jul 78	Jul 78	Jul 78	Jul 78	Jul 78	Jul 78	Aug 78	Aug 78	Aug 78	Aug 78
2	Jul 78		Jul 78	Jul 78	Jul 78	Jul 78	Jul 78	Jul 78		Aug 78	Aug 78	Aug 78
3			Jul 78		Jul 78		Jul 78	Jul 78			Aug 78	Aug 78
4					Jul 78			Jul 78			Aug 78	Aug 78
5								Jul 78			Aug 78	Aug 78
6												
7												
8												
9												
10												
11												
12												
13												
14												
15												
16												
17												
18												
19												
20												
21												
22												
23												
24												
25												
26												
27												
28												
29												
30												
31												
32												
33												
34												
35												
36												
37												
38												
39												
40												
41												
42												
43												
44												
45												
46												
47												
48												

Printed in England
© Rolls-Royce Motors Limited 1979
T.S.D. 4200

Chapter G Part I

Issue record sheet 2

February 1979

The dates quoted below refer to the issue date of individual pages within this chapter.

Section	G12	G13	G14	G15	G16	G17
Page No.						
1	Aug 78	Aug 78	Aug 78	Dec 78	Dec 78	Jan 79
2	Aug 78	Aug 78	Aug 78	Dec 78	Dec 78	Jan 79
3	Aug 78	Aug 78		Dec 78	Dec 78	Jan 79
4	Aug 78			Dec 78	Dec 78	Jan 79
5	Aug 78			Dec 78	Dec 78	
6					Dec 78	
7					Dec 78	
8					Dec 78	
9					Dec 78	
10						
11						
12						
13						
14						
15						
16						
17						
18						
19						
20						
21						
22						
23						
24						
25						
26						
27						
28						
29						
30						
31						
32						
33						
34						
35						
36						
37						
38						
39						
40						
41						
42						
43						
44						
45						
46						
47						
48						

Printed in England

© Rolls-Royce Motors Limited 1979

Chapter G Part II

Issue record sheet 1

October 1979

The dates quoted below refer to the issue date of individual pages within this chapter.

Section	G1m	G2m	G3m	G4m	G5m	G6m	G7m	G8m	G9m	G10m	G11m	G12m
Page No.												
1	Feb 79	Feb 79	Feb 79	Feb 79	Feb 79	Feb 79	Feb 79	Feb 79	Feb 79	Feb 79	Feb 79	Oct 79
2		Feb 79	Feb 79	Feb 79	Feb 79	Feb 79	Feb 79		Feb 79	Feb 79		Oct 79
3		Feb 79	Feb 79	Feb 79		Feb 79	Feb 79			Feb 79		
4		Feb 79								Feb 79		
5										Feb 79		
6										Feb 79		
7												
8												
9												
10												
11												
12												
13												
14												
15												
16												
17												
18												
19												
20												
21												
22												
23												
24												
25												
26												
27												
28												
29												
30												
31												
32												
33												
34												
35												
36												
37												
38												
39												
40												
41												
42												
43												
44												
45												
46												
47												
48												

Printed in England

© Rolls-Royce Motors Limited 1979

S.D. 4200

Chapter G Part II

Issue record sheet 2

March 1980

The dates quoted below refer to the issue date of individual pages within this chapter.

Section	G13m	G14m	G15m	G16m	G17m	G18m
Page No.						
1	Feb 79	Feb 79	Feb 79	Feb 79	Feb 79	Mar 80
2	Feb 79	Feb 79	Feb 79	Feb 79	Feb 79	Mar 80
3		Feb 79		Feb 79	Feb 79	Mar 80
4		Feb 79		Feb 79	Feb 79	Mar 80
5				Feb 79	Feb 79	
6					Feb 79	
7					Feb 79	
8					Feb 79	
9					Feb 79	
10						
11						
12						
13						
14						
15						
16						
17						
18						
19						
20						
21						
22						
23						
24						
25						
26						
27						
28						
29						
30						
31						
32						
33						
34						
35						
36						
37						
38						
39						
40						
41						
42						
43						
44						
45						
46						
47						
48						

Printed in England
© Rolls-Royce Motors Limited 1980
T.S.D. 4200

Hydraulic system colour coding and component location

Right-hand drive cars

Figure G1

Printed in England

© Rolls-Royce Motors Limited 1978

T.S.D. 4200 July 1978

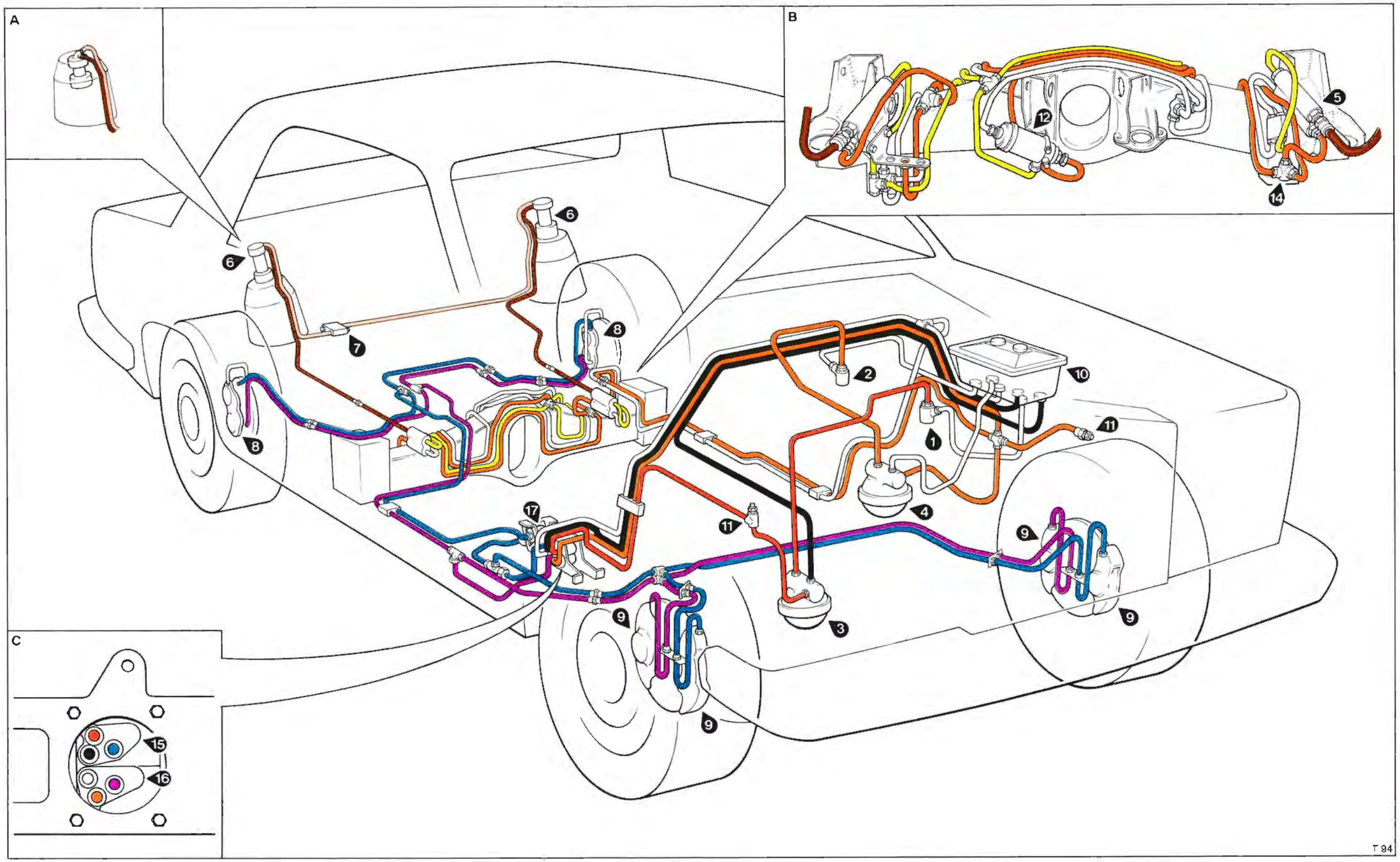

Fig. G1 Hydraulic system colour coding and component location (Right-hand drive cars)

1 Hydraulic pump (No. 1 system)
2 Hydraulic pump (No. 2 system)
3 Hydraulic accumulator (No. 1 system)
4 Hydraulic accumulator (No. 2 system)
5 Height control valves
6 Height control rams
7 Height control ram bleed screws
8 Four cylinder disc brake caliper
9 Twin cylinder disc brake caliper
10 Hydraulic fluid reservoirs
11 Pressure switches
12 Solenoid valve
13 Low pressure line restrictor
14 High pressure line restrictor
15 Distribution valve (No. 1 system)
16 Distribution valve (No. 2 system)
17 Deceleration conscious pressure limiting valve
A Height control ram connections – Corniche Convertible cars
B Rear sub frame rear view
C Distribution valve ports

Hydraulic system colour coding and component location

Left-hand drive cars

Figure G2

Printed in England

© Rolls-Royce Motors Limited 1978

T.S.D. 4200 July 1978

Fig. G2 Hydraulic system colour coding and component location (Left-hand drive cars)

1 Hydraulic pump (No. 1 system)
2 Hydraulic pump (No. 2 system)
3 Hydraulic accumulator (No. 1 system)
4 Hydraulic accumulator (No. 2 system)
5 Height control valves
6 Height control rams
7 Height control ram bleed screws
8 Four cylinder disc brake caliper
9 Twin cylinder disc brake caliper
10 Hydraulic fluid reservoirs
11 Pressure switches
12 Solenoid valve
13 Low pressure line restrictor
14 High pressure line restrictor
15 Distribution valve (No. 1 system)
16 Distribution valve (No. 2 system)
17 Deceleration conscious pressure limiting valve
A Rear sub frame rear view
B Height control ram connections – Corniche Convertible cars
C Distribution valve port connections

Section G1

Introduction

Chapter G Part 1 covers the components for the two independently power operated braking systems the height control system and the mechanically operated parking brake, fitted to Silver Shadow II Bentley T2, Silver Wraith,Corniche and Camargue cars with serial numbers prior to 50 000.

These cars use conventional synthetic brake fluid in the hydraulic systems i.e. Castrol RR 363 Brake fluid.

The braking systems consist of two independent circuits, 'System 1' operating the front road wheels front brake calipers and the upper cylinders of the rear road wheel brake calipers, 'System 2' operating the front road wheels rear brake calipers and the lower cylinders of the rear road wheel brake calipers. All wheels are fitted with disc brakes.

Pressure for the system is supplied by two hydraulic accumulators which are charged by engine operated hydraulic pumps. The hydraulic pump situated in front of the engine air inlet manifold supplies fluid to the accumulator on the right-hand side of the engine (No1 System) and the hydraulic pump situated at the rear of the engine supplies fluid to the accumulator situated on the left-hand side of the engine (No.2 System). This accumulator also supplies pressurised fluid to the height control system. This system is operated by two height control valves situated on the rear suspension crossmember. These valves control the amount of pressurised fluid passed to the hydraulic rams, positioned on top of each rear road spring.

The mechanical parking brake is hand operated on right-hand drive cars. On left-hand drive cars the parking brake is applied by a foot operated pedal and released by a hand lever. Both types of brake operate two additional brake pads onto each rear brake disc.

Printed in England

© Rolls-Royce Motors Limited 1979

February 1979

TSD 4200

Section G2

Special precautions

Important

The hydraulic systems operate at high pressure. Before attempting any work on the hydraulic systems of the car service personnel must note carefully the contents of this section and be fully conversant with the precautions required to ensure adequate safety and correct system operation.

Before any work except specified tests, is carried out on the hydraulic systems, depressurisation of the systems must be carried out.

With the exception of bleed screws; pipes and components must never be removed when the systems are in a pressurised state.

Depressurising a system

Method 1

Switch on the ignition and pump the brake pedal 50 or 60 times until the warning panels marked 1 BRAKE PRESSURE and 2 BRAKE PRESSURE on the instrument facia are illuminated. Switch off the ignition.

On cars destined for Australia, Canada and the USA it will be necessary to pump the brake pedal an extra 30 times after the warning panels have illuminated to ensure complete depressurisation of the systems.

Method 2

With the ignition switched off, place a length of bleed tube over the bleed screw in the accumulator valve body; hold the free end in a clean container.

Open the bleed screw slightly and bleed until fluid no longer flows from the accumulator. The bleed screw should only be opened fractionally otherwise accumulator pressure will force the tube off the bleed screw.

Close the bleed screw, remove the tube and repeat the operation for the other accumulator.

Depressurise the height control rams by placing a bleed tube on each ram bleed screw in turn, opening the bleed screws and allowing the fluid to bleed into a clean container.

Bleeding the hydraulic systems

It is recommended that the gear change thermal cut-out is removed from the fuseboard beneath the facia, to isolate the electric gear change whilst the systems are bled.

Hydraulic fluid

It is important that only the approved fluid should be used (see Chapter D Lubricants). Under no circumstances should a mineral oil be substituted for the genuine fluid.

It must be noted that brake fluid is hygroscopic, i.e. the fluid will absorb and chemically combine with water from the atmosphere.

Brake fluid which is contaminated by water will boil at a much lower temperature than fluid with no water content.

If the fluid is contaminated and the car is braked excessively or very hard from high speeds, there will be a tendency for the heat generated by the brakes to boil the fluid, which could result in vaporisation of the brake fluid causing a delay in braking response to brake pedal actuation.

This situation can be dangerous in that although full braking will ultimately be available, an excessive delay can be misinterpreted as ineffective brakes and so confuse the driver into otherwise unwarranted actions.

To eliminate possible contamination of the brake fluid it is essential that the fluid is exposed to the atmosphere for the absolute minimum of time. It should always be stored in and used direct from small sealed containers. When the systems are replenished, the two reservoir covers and the container cover must be replaced immediately.

Cleanliness

For the correct functioning of the hydraulic systems meticulous care should be taken to ensure complete cleanliness at all times.

Since both the braking system and the height control system employ components which have very fine manufacturing limits, the ingress of even very fine particles of foreign matter could have very serious effects on the operation of the systems.

Care must therefore be taken to ensure that at all times only clean fluid of the specified type (refer to Chapter D) is used in the systems and that any overhauled units or components have not been exposed to contamination before they are fitted to the car.

Contact with mineral based oils must be avoided at all times as these oils have a detrimental effect on the rubber seals used in the hydraulic systems.

Removing components

Prior to disconnecting any pipes or removing hydraulic components from the car, the area around

Printed in England

© Rolls-Royce Motors Limited 1978

July 1978

S.D. 4200

the pipes and components should be thoroughly cleaned. Particular attention should be given to the localised areas around the pipe unions and their corresponding ports.

Whenever units, pipes or components are disconnected from the hydraulic systems all open ports and pipe ends must be blanked off immediately to avoid contamination of the systems.

It is stressed that the clean condition of any blanks used is equally as important as the clean condition of the components they seal.

The size and type of each blank is as follows:

Male	3/8 in. U.N.F.
Female	3/8 in. U.N.F.
Male	7/16 in. U.N.F.

There are two types of female push-on blanking cap.

Quantities of blanks may be obtained, on request, from the Parts Department at Crewe.

In addition, special pressure blanks are available, capable of withstanding full hydraulic system pressure, for use during testing and fault diagnosis procedures where it may be necessary to blank off a pipe or component and then charge the systems.

Note
Masking tape and/or cork bungs do not constitute blanks.

The Part Numbers of the pressure blanks listed in the Tools Catalogue are as follows:

RH 7310	Male	3/8 in. U.N.F.
RH 7809	Female	3/8 in. U.N.F.

When used, these blanks must be torque tightened to the figures quoted for the pipe unions which they replace.

Cleaning components
Components which have been removed should be thoroughly cleaned before replacement.

Blow dry compressed air through all pipes. Rubber pipes, sealing rings and other components should be washed in methylated spirits and then dried with dry compressed air.

Cloths, even the lint free type, should never be used to clean hydraulic components or sealing rings.

Methylated spirits is the only recommended cleanser; trichlorethylene, paraffin or petrol must never be used to clean hydraulic components.

Note
When rubber seals are washed in methylated spirits, they must not be allowed to soak, as prolonged immersion in spirit could have a detrimental effect.

Hydraulic system - General maintenance
When the hydraulic reservoir and systems are drained completely always fill with fresh clean fluid of the specified type. Refer to Chapter D for the fluid specification.

This procedure will require a complete bleeding operation to be performed afterwards to remove all air from the systems.

Servicing rubber components
In the interest of safety, the rubber components used in the hydraulic systems have been allotted specific 'life' mileages at the completion of which, or at the nearest service, it is recommended that the components are renewed. (Reference should be made to Service Schedule Manual publication number T.S.D. 4117 for this information.)

Seals, other than dust covers, used in the hydraulic systems should only be lubricated with clean brake fluid of the approved type.

Hydraulic accumulator spheres
The hydraulic accumulator spheres are charged on one side of the diaphragm with nitrogen gas (see Chapter G6) through a one-way charging valve, the valve being situated in the lower end of the sphere.

Replacement spheres are supplied in an uncharged state and therefore must be charged by the Franchise holder before being used to replace existing faulty spheres.

Exchange spheres are supplied complete with charging valve cap; a warning plate and locking washer are supplied loose. A label is attached which reads 'Uncharged - Remove label on charging and attach warning plate .

It is of the utmost importance that, when the sphere is charged, the warning plate is fitted below the charging valve cap (see Fig. G10).

Spheres must never be transported in a charged state, they must always be discharged before despatch.

Service Personnel are advised that spare accumulator spheres should be charged and leak tested immediately on receipt and then stored in a charged condition.

This ensures that the storage period is utilised as a time/leakage test so that when a sphere is removed from store and the pressure of the nitrogen is tested after fitting, it can be seen whether the sphere is still fully charged with nitrogen.

Spheres which have been correctly charged and successfully leak tested before storage and then show a loss of pressure in excess of 1,75 kg/sq.cm. (25 lb/sq.in.) when tested prior to fitting, must be rejected. The sphere should be recharged and leak tested again to determine the cause of leakage. If the leak persists, the sphere should be discharged and dismantled and the diaphragm checked and renewed if necessary (refer to Section G6).

Fitting replacement units
Replacement hydraulic units are tested and blanked off before being despatched from the factory.

It is advisable, when fitting a replacement unit, that when the unit has been placed in position and the blanks removed, the fluid in the unit is allowed

to drain before the pipes are connected.

When drained, the pipes should be connected and the appropriate bleeding operations carried out.

Note

The fluid should not be blown out; allowing it to drain is sufficient.

Storage and transportation

The care taken to prevent contamination of components during storage or transportation is extremely important.

Replacement parts, pipes and units must be correctly and securely sealed with the recommended blank which should not be removed until immediately prior to fitting. The replacement parts must also be adequately protected from dust or damage.

Sealing rings and rubber pipes in store should be protected from dust, light and heat.

Printed in England
© Rolls-Royce Motors Limited 1978
July 1978
S.D. 4200

Section G3

Hydraulic system pipework

Except in certain cases where flexible hoses are used to accomodate movement between two units the fluid for the systems is carried in bundy tubing.

The pipework, with the exception of the flexible hoses, is almost entirely 4,76 mm. (0.186 in.) diameter bundy tubing. The only exceptions are the ends of the return pipes from the hydraulic accumulators to the reservoir which are 6,35 mm. (0.250 in.) diameter. The metal sections of the feed pipes from the reservoir to the hydraulic pumps and the pressure feed pipe from the hydraulic pump to the accumulator are 9,52 mm. (0.375 in.) diameter.

To enable pipe identification neoprene sleeves are fitted to each end of the metal pipes, except for the short bridge pipe fitted to each rear caliper. A chart quoting the pipe colours and functions is given on Page G3 - 2. This chart should be consulted to determine the function of each pipe i.e. high pressure, low pressure and system.

Generally, pipework connections are effected by flared pipe ends and unions, either male or female as necessary. Conical seats are machined in the components or junctions to seat the flares and provide effective joints. In certain flexible pipe joints face seals and copper washers are employed.

If hydraulic pipes are disturbed the following points should be noted.

The area around the pipe union and pipe end should be thoroughly cleaned before the union is unscrewed.

Pipe ends should always be blanked off immediately after removal and the blanks should not be removed until immediately before fitting.

Whenever pipes are removed, the flares should be inspected for serviceability and pipes showing signs of damage, cracking or collapse must be renewed.

Before fitting, pipes and unions should be cleaned thoroughly using methylated spirits, then blown through with clean dry compressed air. Particular attention should be paid to the union and the exterior of the pipe immediately behind the flare.

When fitting pipes, do not overtighten unions as this could cause damage to pipe flares. In the case of face seals new copper washers must be fitted each time a pipe is refitted.

If when a pipe is removed the coloured sleeves are in poor condition they should be renewed. This is best achieved by expanding a new correctly coloured, rubber sleeve sufficiently to clear the union using a small three pronged expanding hand tool (e.g. Penguin pliers).

Identification sleeves are not fitted to the flexible hoses but the sleeves on the connecting pipes at either end may be used to identify the flexible pipe and its function.

The flexible and metal pipes can be readily identified by means of the colour coding and component location layout (see Figs.G1 and G2) and the function chart shown on Page G3 - 2.

Note

The two high pressure pipes from the hydraulic pumps to the hydraulic accumulators and the feeds from the reservoir to the hydraulic pumps are not marked and do not connect to any other marked pipes. Since these pipes are the only ones without means of identification confusion should not arise.

Extreme caution should be taken when fitting or renewing flexible pipes to ensure that the correct type of pipe is fitted, in the correct place and in accordance with the colour coding.

In the interest of safety, the flexible pipes fitted to the hydraulic systems have been allotted specific 'life' mileages at the completion of which or at the Service nearest to this mileage it is recommended that the flexible pipes are renewed.

For recommended 'life' mileages reference should be made to the Service Schedule Manual publication number T.S.D. 4117.

When removing ridged or flexible pipes, the positions of all clipping points and pipe routing should be noted to ensure that, when fitted, no chafing or vibration of the pipes can occur. Always ensure that the flexible hoses and ridged pipes are routed to clear other components and that clearance is maintained during the full range of steering and suspension movement.

It should be noted that the 4,76 mm. (0.186 in.) diameter pipes are not available as spares and in the event of a replacement being required it is recommended that they are produced using 'Armco' 25 microns zinc plated, fully chromate passivated bundy tubing. Care should be taken to avoid sharp bends when producing replacement pipes as this will cause the plating to fracture.

Note

The pipe connection tappings on the front wheel calipers are metric threads and only unions of the correct thread should be fitted to the caliper end of the pipes.

All pipes must be thoroughly cleaned using methylated spirit and dried using clean compressed

Printed in England
© Rolls-Royce Motors Limited 1978
July 1978
T.S.D. 4200

air. The ends should then be blanked until immediately before fitting.

All replacement pipes should be protected with a coating of underseal after fitting and leak checks have been carried out.

Non-standard torque figures are specified for certain pipe unions and fittings. These figures are given in Chapter P which also quotes all standard and non-standard torque figures. These figures must be adhered to at all times to avoid overtightening and possible damage.

Pipework colour coding

Colour	Function	System and location
Red	High pressure	**No.1 Braking system,** pipes from the front hydraulic pump to the right-hand accumulator and from the right-hand accumulator to the upper brake distribution valve.
Orange	High pressure	**No.2 Braking and height control system,** pipes from the rear hydraulic pump to the left-hand accumulator and from the left-hand accumulator to the lower distribution valve. Also from the left-hand accumulator to the height control solenoid valve and the height control valves.
Black	Low pressure	**No.1 Braking system,** return pipe from the upper brake distribution valve to the fluid reservoir.
White	Low pressure	**No.2 Braking and height control system,** return pipes from the lower brake distribution valve to the fluid reservoir; return from the height control valves to the reservoir. Also the height control solenoid to the reservoir.
Blue	High pressure	**No.1 Braking system,** pipes from the upper brake distribution valve to the front calipers on the front wheels and the upper cylinders on the rear wheel calipers.
Mauve	High pressure	**No.2 Braking and height control system,** pipes from the lower brake distribution valve to the rear calipers on the front wheels and the lower cylinder on the rear wheel calipers.
Yellow	High pressure	**No.2 Braking and height control system,** pipes carrying signal pressure from the solenoid valve to the height control valves.
Brown	High pressure	**No.2 Braking and height control system,** pipes from the height control valves to the height control rams.
Pink	High pressure	**No.2 Braking and height control system,** pipes from height control rams to remote bleed screws on the body sill adjacent to the right-hand rear wheel.

Section G4

Bleeding the hydraulic systems

Introduction

In order to obtain optimum performance of the hydraulic systems it is essential that they are free of air at all times. The two hydraulic systems are re-circulatory and therefore, if air is allowed to enter them at any point it will reduce efficiency.

Bleed screws are provided on the side of the accumulators, on the left-hand pressure switch, on each pair of brake calipers, on each height control ram and on the deceleration conscious pressure limiting valve. The bleed screws for the height control rams are positioned on the inner side of the right-hand body sill just forward of the rear wheel arch (see Fig. G3).

The accumulators are situated on each side of the engine. The accumulator for the number one system is situated on the 'A' bank side of the engine; the accumulator for the number two system is situated on the 'B' bank side of the engine. The pressure switches are mounted on each valance adjacent to its respective accumulator.

The front compartment of the hydraulic reservoir supplies fluid for the number one braking system. From the reservoir fluid is supplied to the front brake pump which in turn supplies hydraulic fluid under pressure to the right-hand accumulator, the upper distribution valve, the deceleration conscious pressure limiting valve, the front calipers of the front brakes and the upper cylinders of the rear brake calipers.

The rear compartment of the hydraulic reservoir supplies fluid for the number two braking system. From the reservoir fluid is supplied to the rear brake pump which in turn supplies fluid under pressure to the left-hand accumulator, the lower distribution valve, the rear calipers of the front brakes, the lower cylinders of the rear brakes and the height control rams.

If a rectification has been carried out between the brake pumps and the distribution valves, it will be necessary to bleed at all the bleed points in that particular circuit.

If a rectification has been carried out between the distribution valves and the brake calipers, it should only be necessary to bleed at the bleed points between the distribution valve and the brake calipers in the faulty circuit. However if in any doubt it is advisable to bleed the complete system.

Care must be taken when bleeding at the brake pressure switch not to allow brake fluid to come into contact with the paintwork, as serious damage would result. As the pressure switch is located in close proximity to the engine cooling fan and various driven belts, bleeding of the switch should only be carried out with the engine switched off.

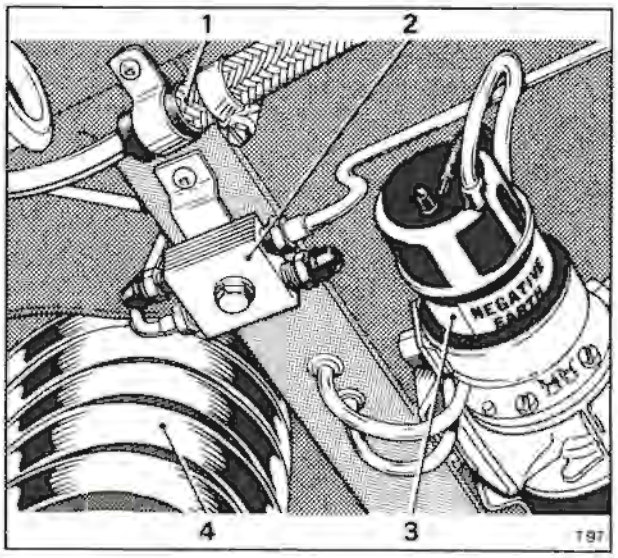

Fig. G3 Rear height control ram bleed screw location
1 Fuel pipe
2 Bleed screws
3 Fuel pump
4 Right-hand rear road spring

The power brake circuits should be bled at low pressure ensuring that the system is depressurised and the fluid levels in the reservoirs are kept above the minimum marks at all stages of the bleeding operation.

To obtain low pressure bleeding the system(s) must remain open at all times. Also throughout the bleeding operation, the brake pressure warning panel(s) 1 BRAKE PRESSURE and/or 2 BRAKE PRESSURE should be illuminated. Only when bleeding the height control rams and the pressure switch should the systems be fully pressurised and the warning panel lamps extinguished.

When bleeding the height control rams the interior of the car should be weighted to compress the suspension sufficiently for the height control valves to actuate and allow pressurised fluid through to the rams and bleed screws. The engine should be allowed to run for four minutes to ensure that the system is fully charged. Bleed both of the rams until all the air bubbles cease then allow fifteen seconds to elapse before fully tightening each bleed screw.

Printed in England
© Rolls-Royce Motors Limited 1978
July 1978
T.S.D. 4200

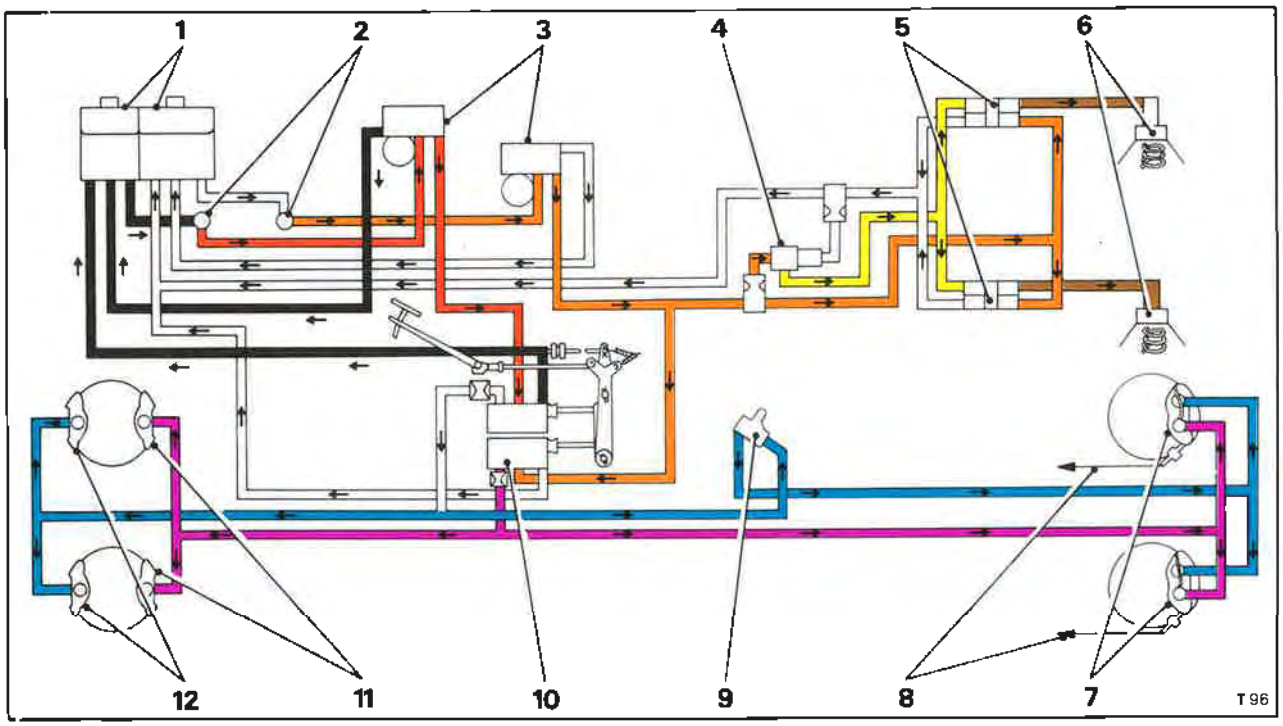

Fig. G4 Diagram of the hydraulic systems

No.1 Braking system
- High pressure
- Brake line pressure
- Low pressure
- Restrictors

No.2 Braking and levelling system
- High pressure
- Brake line pressure
- Low pressure
- Intermediate pressure
- High/low (solenoid signal pressure

1 Fluid reservoirs
2 Hydraulic pumps
3 Hydraulic accumulators
4 Solenoid valve
5 Height control valves
6 Height control rams
7 Rear wheel brake calipers
8 Parking brake cables
9 Deceleration conscious pressure limiting valve
10 Brake distribution valves
11 Rear brake calipers - front wheels
12 Front brake calipers - front wheels

Bleeding the systems

The following information is a comprehensive bleeding operation which should be carried out to ensure removal of air from the complete hydraulic systems but, as previously stated, each system can be bled separately at all points downstream of any replacements or pipe disconnections. A planned bleeding chart is given at the end of this section but if any doubt exists, it is advisable to bleed the complete system concerned.

Whilst bleeding is being carried out it is essential that the fluid level of the two reservoir compartments is kept to at least the topping-up level mark on the sight glasses using clean approved fluid (refer to Chapter D Lubricants).

All bleed screws should be torque tightened in accordance with the figure quoted in Chapter P.

When bleeding the hydraulic systems attach a length of rubber tube to each bleed screw prior to the bleed screw being opened, immerse the free end of the tube in approximately 2,5 cm. (1 in.) of brake fluid contained in a clean bottle.

With the gear selector in the 'P' park position and the parking brake applied, remove the gear-change thermal cut-out from the fuseboard below the facia.

Bleed the complete systems in the following sequence (refer to Fig. G5).

Depressurise the hydraulic systems.

Open bleed screws at points A, B and C.

Depress brake pedal. Start and run engine at between 750 r.p.m. and 800 r.p.m.

Ensure facia warning panels 1 BRAKE PRESSURE and 2 BRAKE PRESSURE are illuminated.

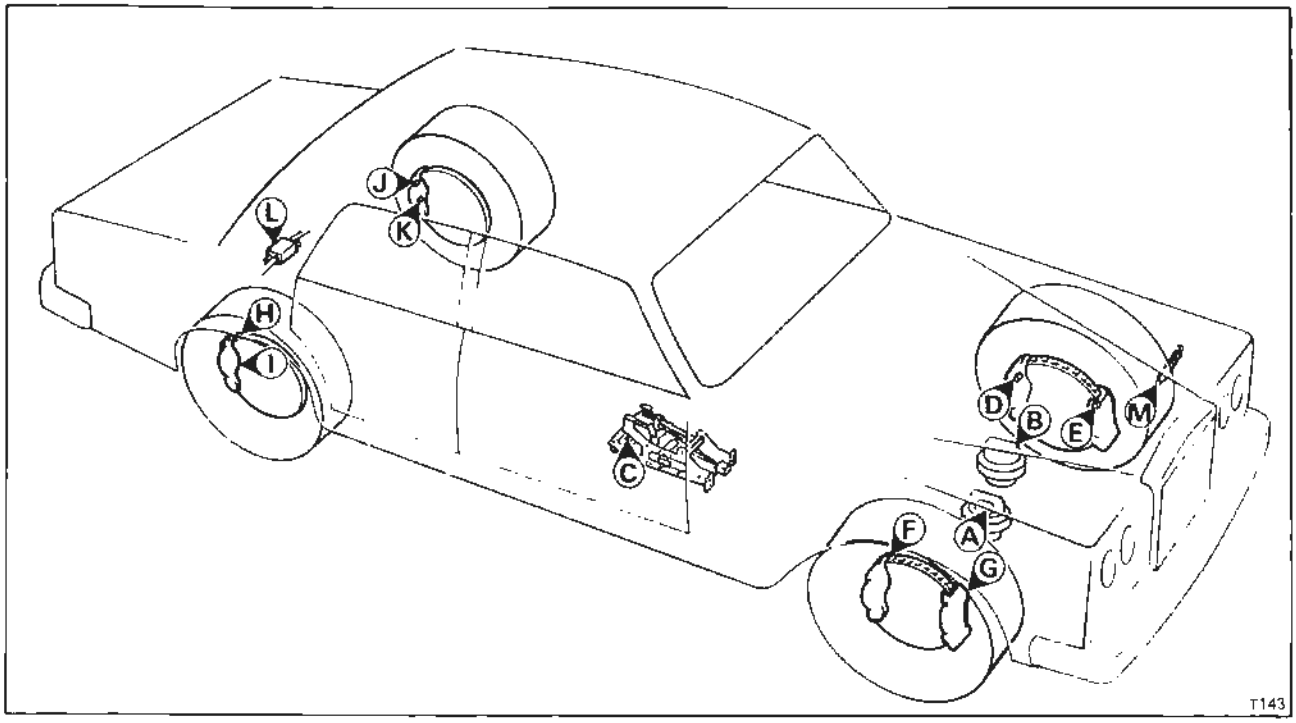

Fig. G5 Hydraulic system bleed point locations

A 'A' Bank accumulator
B 'B' Bank accumulator
C Pressure limiting valve
D Rear caliper left-hand front wheel
E Front caliper left-hand front wheel
F Rear caliper right-hand front wheel
G Front caliper right-hand front wheel
H Right-hand rear caliper (upper cylinder)
I Right-hand rear caliper (lower cylinder)
J Left-hand rear caliper (upper cylinder)
K Left-hand rear caliper (lower cylinder)
L Height control rams (underside rear floor)
M Pressure switch (left-hand valance)

Allow points A, B and C to bleed until air free.
Open bleed screws at points D and E; allow bleeding to start.
Close bleed screws at points A, B and C.
Bleed at points D and E until air free.
Open bleed screws at points F and G; allow bleeding to start.
Close bleed screws at points D and E.
Bleed at points F and G until air free.
Open bleed screws at points H and I; allow bleeding to start.
Close bleed screws at points F and G.
Bleed at points H and I until air free.
Open bleed screws J and K; allow bleeding to start.
Close bleed screws at points H and I.
Bleed at points J and K until air free.
Close bleed screws at points J and K.
Release brake pedal.
Add weight to rear of car to actuate levelling valves.
Allow systems to pressurise (facia warning panels extinguished).
Open bleed screws at point L; bleed until air free.
Close bleed screws at point L.
Switch off engine.
Open bleed screw at point M; bleed until air free.
Close bleed screw at point M.
Check fluid levels in reservoir, top up as necessary.
Fit rubber dust covers to each bleed screw.

Note

System 1 BRAKE PRESSURE bleed points A,C,E,G, H and J.
System 2 BRAKE PRESSURE bleed points B,D,F,I, K,L and M.

When bleeding the height control rams and the pressure switch extra care should be taken when slackening the bleed screws as the system will be operating at full pressure.

Sectional bleed requirements

Red pipe line

Any pipe disturbed between the hydraulic reservoir front compartment, front hydraulic pump, right-hand accumulator and upper distribution valve (No. 1 system).

Bleed the complete system: right-hand accumulator, deceleration conscious pressure limiting valve, front calipers on the front wheels, upper cylinder on the rear wheels.

Orange pipe line

Any pipe disturbed between the hydraulic reservoir rear compartment, rear hydraulic pump, left-hand accumulator, lower distribution valve and height control valves (No. 2 system).

Printed in England
© Rolls-Royce Motors Limited 1978
July 1978
T.S.D. 4200

Bleed the complete system: left-hand accumulator, rear calipers on the front wheels, lower cylinder on the rear wheels, height control rams and pressure switch.

Blue pipe line
Any pipe disturbed between the upper brake distribution valve and front calipers on the front wheels and the upper cylinders on the rear wheel calipers.

Bleed the deceleration conscious pressure limiting valve, the front calipers on the front wheels and the upper cylinder on the rear wheel calipers.

Mauve pipe line
Any pipe disturbed between the lower brake distribution valve and rear calipers on the front wheel and lower cylinder on the rear wheel calipers.

Bleed the rear calipers on the front wheels and the lower cylinders on the rear wheel calipers.

Brown pipe line
Any pipe disturbed between the height control valves and the height control rams.

Bleed the height control rams.

After bleeding, the systems must be fully charged and the reservoir compartments topped-up in accordance with the instructions given on the sight glass instruction plate.

Printed in England
© Rolls-Royce Motors Limited 1978

Section G5

Hydraulic fluid reservoir

Before commencing any operations on the hydraulic brake fluid reservoir the car wings should be suitably protected with wing covers.

Brake fluid reservoir - To remove

1. Depressurise the systems as described in Section G2.
2. Disconnect the battery.
3. Disconnect the Lucar connector from the resistor fitted to the left-hand side of the reservoir (see Fig. G6).
4. To drain the front compartment of the reservoir slacken the hose clip situated in the centre of the reservoir to hydraulic pump pipe. Compress the rubber hose section of the pipe to prevent fluid flow, then carefully withdraw the hose off the connecting pipe. Place the hose end in a clean container and allow the fluid to drain from the reservoir. Repeat the draining operation on the reservoir rear compartment.
5. Blank off the hose and pipe ends.
6. Disconnect the pipe connections from the reservoir base and blank off all pipe ends and ports.
7. Remove the setscrews securing the reservoir to the spring pot and the rear reservoir mounting bracket.
8. Lift the reservoir from its location.

Reservoir - To dismantle, clean and assemble

Providing that the proper precautions are taken against the ingress of dirt into the systems and that perfectly clean fluid is always used when topping-up, the reservoir will only require servicing as specified in the Service Schedule Manual publication number T.S.D. 4117.

If however the systems become contaminated the following dismantling and cleaning procedure should be carried out, reference being made to Figure G7.

1. Drain and remove the reservoir as described under Brake fluid reservoir - To remove.
2. Remove the screws and nuts securing the top cover then remove the top cover.
3. Remove the large combined filter and gasket.
4. Remove the two reed switch floats. Ensure that no foreign matter adheres to the magnet on each float.
5. Remove the setscrews, nuts and washers securing the baffle plates to the dividing wall of the reservoir and remove the plates and rubber cups.
6. Unscrew and remove the hexagon based filters.
7. Remove the four screws which secure the fluid level instruction plate to the reservoir; remove the instruction plate.

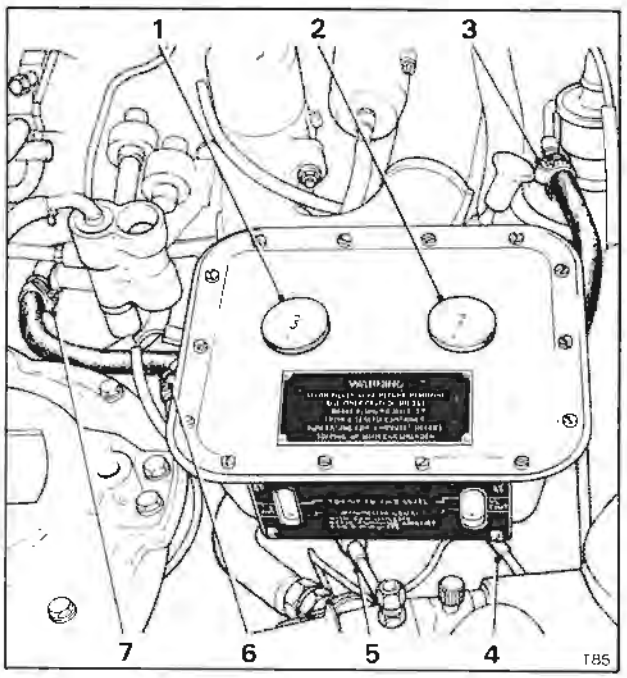

Fig. G6 Hydraulic fluid reservoir - In position

1 Filler cap (No. 1 system)
2 Filler cap (No. 2 system)
3 Hydraulic pump low pressure inlet pipe (No. 2 system)
4 Accumulator return pipe (No. 2 system)
5 Accumulator return pipe (No. 1 system)
6 Resistor - brake fluid level switches
7 Hydraulic pump low pressure inlet pipe (No. 1 system)

8. Remove the four countersunk screws which secure the inner ends of the glass retaining plates; carefully remove the plates, glass and sealing rings.
9. Thoroughly clean all parts with methylated spirits, drying them with dry compressed air; ensure that all holes and adapter threads are carefully cleaned and blanks fitted.

Note

Care should be taken during dismantling and cleaning to ensure that the reed switch stems are not bent or damaged, as this will cause the switches to be inoperative.

10. Assembly is the reverse of the procedure given for dismantling, noting that new sealing rings should be smeared with clean brake fluid and fitted to the sight glass apertures. Torque tighten the internal filters and all other fittings in accordance with the figures quoted in Chapter P.

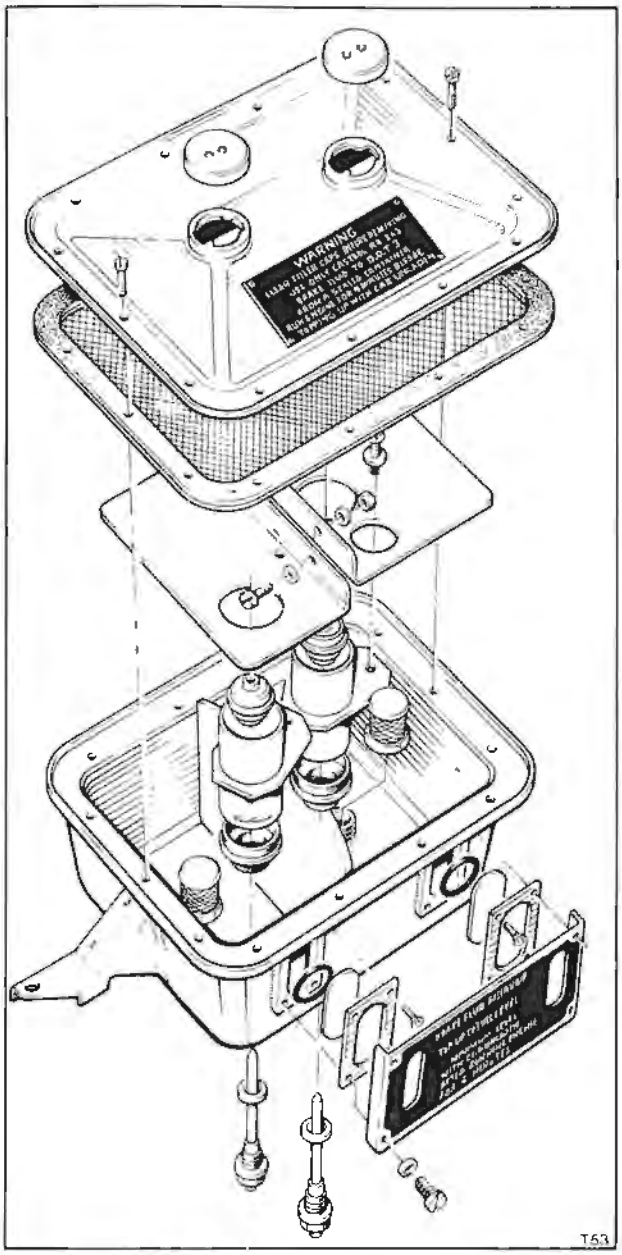

Fig. G7 Hydraulic fluid reservoir

On completion the reservoir should be topped-up with the recommended brake fluid (see Chapter D) and the systems bled in accordance with the instructions given in Section G4.

Reservoir - To fit and top-up

To fit the reservoir reverse the procedure given for its removal noting the following points.

1. When the reservoir has been fitted and all pipes connected and torque tightened (see Chapter P), fill the reservoir with clean recommended fluid (see Chapter D) until the levels are slightly above the topping-up level on the sight glasses.
2. Run the engine for approximately four minutes, then top-up the reservoir to the topping-up mark on the sight glass. Never allow the fluid levels to fall below the minimum levels on the sight glasses.
3. Check for leaks around all unions and pipes which have been disturbed.
4. The hydraulic systems must then be bled completely as described in Section G4.

Reed switches - To remove

To renew a low fluid level warning reed switch the following procedure should be carried out.

1. Carry out operations 1 to 5 inclusive of Brake fluid reservoir - To remove.
2. Remove the screws securing the reservoir top cover.
3. Remove the top cover and the large combined filter and gasket.
4. Lift out the float of the reed switch to be removed. Ensure that foreign matter does not adhere to the float magnet when removed.
5. Using a suitable spanner, unscrew and remove the reed switch together with the joint washer from the underside of the reservoir.

Reed switch - To fit

To fit a low fluid level warning reed switch reverse the procedure for removal noting the following points

1. The reed switch and reservoir base adapter should be thoroughly cleaned using methylated spirits and all traces of old sealant removed.
2. Fit the joint washer to the reed switch and apply a light coating of 'Casco MLF 17 Red' locking fluid to the threads of the reed switch. Fit and torque tighten the switch (see Chapter P).
3. On completion the reservoir should be topped-up with the recommended brake fluid (see Chapter D) and the system bled in accordance with the instructions given in Section G4.

Reservoir sight glass sealing rings - To renew

1. Carry out operations 1 and 4 of Brake fluid reservoir - To remove.
2. Remove the four screws which secure the fluid level instruction plate to the reservoir, remove the instruction plate.
3. Remove the four countersunk screws which secure the inner ends of the glass retaining plate; carefully remove the plates, glass, and sealing rings.
4. Lightly smear the new sealing rings with clean brake fluid and locate them in position.
5. Assemble by reversing the procedure given for removal, taking care to ensure that the sealing rings and glasses are clean and properly located.
6. On completion the reservoir should be topped-up with the recommended brake fluid (see Chapter D) and the systems bled in accordance with the instructions given in Section G4.

Printed in England

© Rolls-Royce Motors Limited 1978

Section G6

Hydraulic pumps

Before commencing any operations on the hydraulic pumps the car wings should be suitable protected with wing covers.

Hydraulic pump housing sealing rings - To renew
If brake fluid leakage occurs from a brake pump housing it is possible to renew the two sealing rings with the pump(s) in position using the following procedure.
1. Depressurise the hydraulic systems as described in Section G2.
2. Ensure that the pump(s) and the surrounding area is thoroughly clean.
3. Compress the rubber hose section of the hydraulic pump low pressure inlet pipe to prevent fluid flow. Remove the hose at the centre connection worm-drive clip. Suitably blank the hose end or allow the fluid to drain into a clean container.

Note
When work is being carried out on the rear hydraulic pump the ignition distributor should be removed as described in Chapter M.

On cars fitted with an exhaust emission control system the three way connector and check valve must be removed from above the front hydraulic pump (see Section U2).
4. Disconnect the high pressure outlet and low pressure inlet pipes from the hydraulic pump.
5. Remove the circlip from the top of the pump and draw the outer housing upwards and off the pump.
6. Discard the two old sealing rings; fit new ones lubricated with clean brake fluid of the approved type.
7. Fit the pump outer housing, aligning the port with the inlet pipe. Press the housing firmly into position then fit the circlip.
8. Prime the pump with approved brake fluid, connect the low pressure feed and high pressure outlet pipes to the pump, also connect the low pressure hose from the reservoir.
9. Top-up the reservoir with approved fluid (see Chapter D) and bleed the hydraulic systems as described in Section G4.

Hydraulic pumps - To remove
1. Carry out Operations 1 to 5 inclusive of Hydraulic pump housing sealing rings - To renew.
2. Using special box spanner (RH 8428) unscrew and remove the pump from its pedestal on the tappet chest cover; blank off the pedestal against the ingress of dirt.

Note
The pump cannot be removed using the top adapter as a spannering point.

Hydraulic pump - To dismantle
When two pumps are being dismantled the components from each pump must not be interchanged.
1. Remove the adapter from the top of the pump and withdraw the non-return valve assembly from the bore.

Gentle use of a small screwdriver may be necessary to assist removal of the chamfered washer; if the washer has spread it should be discarded and a new one fitted on assembly.
2. Remove the inlet valve ring, spacer ring and conical valve spring.
3. From the lower end of the pump remove the circlip and withdraw the plunger and spring collar; collect the spring.

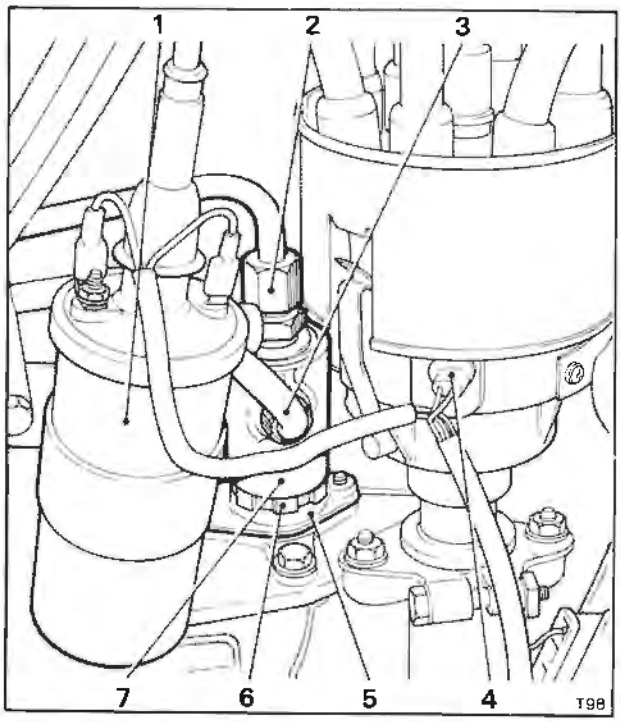

Fig. G8 Rear hydraulic pump
1 Ignition coil
2 High pressure outlet pipe
3 Low pressure inlet pipe
4 Ignition distributor
5 Pump mounting pedestal
6 Hydraulic pump spanner point
7 Pump outer housing

July 1978

T.S.D. 4200

4. Carefully withdraw the plunger barrel from the pump body.

Note

The barrel and plunger are a matched ground component and pieces are not interchangeable with pieces from other assemblies.

5. Remove and discard the three 'O' rings from the pump body.

6. To dismantle the non-return valve assembly, remove the circlip, push out the valve from the outer body and collect the spring, end stop and valve.

Hydraulic pump components - To clean and inspect

Important

Ensure that all components are absolutely clean.

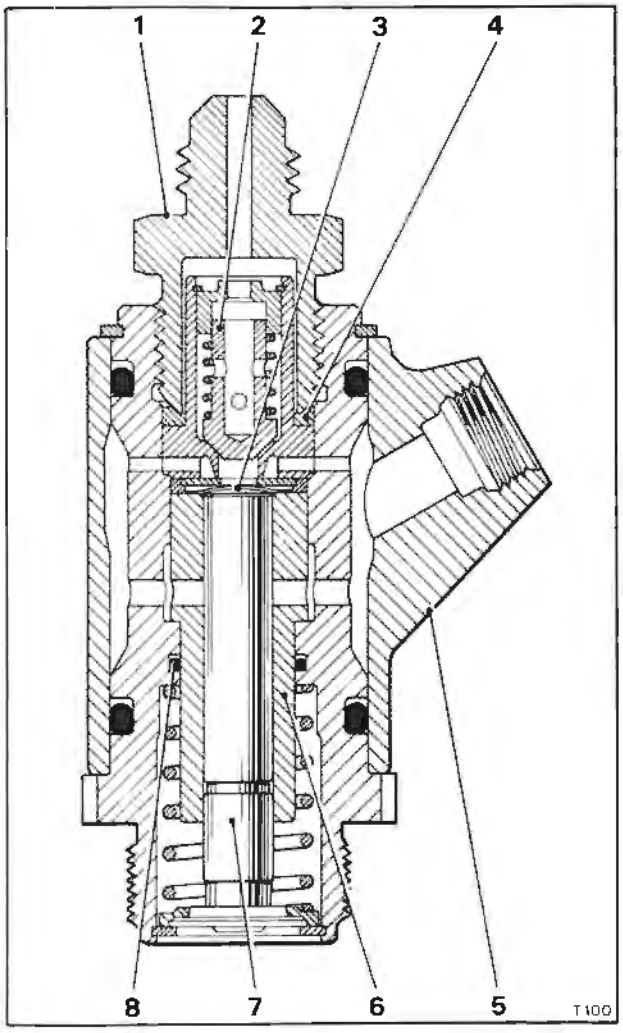

Fig. G9 Hydraulic pump - Sectional view

1 Adapter - high pressure outlet
2 Non-return valve
3 Inlet valve
4 Chamfered ring
5 Outer housing
6 Pump barrel
7 Plunger
8 Sealing ring

Tapped holes require special attention to ensure that they are free from foreign matter and slivers of thread which might break off during assembly and become entrapped in the hydraulic system. One method of achieving this is to screw slave adapters or setscrews down the threads before thoroughly cleaning the components in methylated spirits and drying with dry compressed air, **not cloth.**

It is important that the seating of the valves is correct and that the finely machined barrel and plunger are not scored or damaged.

Under normal circumstances after a thorough cleaning, and the introduction of a new set of sealing rings, the only parts that might need renewal are the small coil springs.

Hydraulic pump - To assemble

When assembling a hydraulic brake pump reference should be made to Figure G9.

1. Lubricate all parts including sealing rings with approved brake fluid (see Chapter D) prior to fitting in their respective positions.
2. Fit the small 'O' ring into position in the centre bore of the pump body.
3. Insert the plunger barrel into the pump body, pressing it through the sealing ring until it abuts the shoulder.
4. Insert and locate the spacer; fit the valve spring (crowned face towards inlet valve) and the inlet valve into position adjacent to the barrel head. Ensure that the seating face of the valve is free from damage marks otherwise the efficiency of the pump will be reduced.
5. Assemble the non-return valve, reversing the procedure given for its dismantling. Ensure that the valve is fully seated and the circlip correctly located in its groove. The end stop should be drawn upward to abut the circlip.
6. Fit the non-return valve assembly larger diameter leading into the pump body bore to abut the inlet valve ring.
7. Fit the chamfered sealing ring, small bore diameter leading into the pump body bore, to abut the shoulder of the non-return valve.
8. Fit the adapter to the top of the pump body, torque tightening to the figures quoted in Chapter P. Blank off the union.
9. Fit the coil spring into the lower end of the pump body.
10. Fit the spring collar to the barrel plunger and carefully insert the plunger into the bore of the barrel.
11. Depress the plunger against the spring sufficiently to enable the circlip to be fitted in its location.
12. Fit the two 'O' rings to the outside of the pump body. The pump is now ready for fitting to the engine.

Hydraulic pump - To fit and set

Prior to fitting the pump to the engine tappet cover flange, ensure that the shim washer fitted between the pump mounting flange and tappet cover is of the

correct thickness. For checking procedure refer to Chapter E Engine.

To fit the hydraulic pump, reverse the procedure for removal noting the following points.

1. The hydraulic pump and pipe connections should be torque tightened in accordance with the figures quoted in Chapter P. The pump should only be tightened using special box spanner (RH 8428), the top adapter should never be used as a spannering point.
2. Bleed the hydraulic systems as described in Section G4. Check all disturbed pipe connections for leaks.

Hydraulic pumps - To test (on the car)

1. Depressurise the system as described in Section G2.
2. Place a length of bleed tube onto the bleed screw of the accumulator pressurised by the pump to be tested; place and secure the other end of the tube in a clean measuring vessel, then open the bleed screw.
3. Ensure the appropriate reservoir compartment is full and start the engine.
4. Fluid should flow from the bleed tube in a series of spurts, coinciding with each revolution of the camshaft. The rate of flow should be approximately 250 ml. or just under ½ pint per minute at an engine speed of 1 000 r.p.m.
5. If fluid does not flow or the pumped quantity is below requirements the pump should be removed and overhauled.

Printed in England
© Rolls-Royce Motors Limited 1978
July 1978
T.S.D. 4200

Printed in England
© Rolls-Royce Motors Limited 1978
July 1978
T.S.D. 4200

Section G7

Hydraulic accumulators

The hydraulic accumulators are mounted on the sides of 'A' bank (No.1 Hydraulic system) and 'B' bank (No.2 Hydraulic system) of the engine crankcase. Each accumulator consists of a sphere containing high pressure nitrogen gas with a control valve assembly mounted to the top of the sphere (see Fig. G12).

Hydraulic accumulator - To remove

The hydraulic accumulator must be removed from underneath the car.

1. Depressurise the hydraulic systems as described in Section G2.
2. Unscrew the worm drive clip on the fluid return hose, (see Figs.G10 and G11) clamp the hose to prevent fluid flow and withdraw it off the connecting pipe. Blank off the hose to prevent loss of fluid.
3. Disconnect the high pressure inlet and outlet pipes from the accumulator and blank off both pipes and connections.
4. Remove the setscrews and nut securing the retaining plate to the engine sump flange and the accumulator, collect the distance pieces and remove the plate.
5. Support the accumulator, remove the setscrews securing the accumulator to the engine crankcase, collect the distance pieces, then carefully remove the accumulator from the engine.

Hydraulic accumulator sphere and valve housing - To separate

1. Slacken the charging valve cap and allow any gas that may be escaping from the sphere to be discharged.
2. Remove the cap and discard the sealing ring. Collect the warning plate and sealing washer.
3. Unscrew the sphere from the valve housing.

Note

When using the hexagon machined on the sphere adjacent to the charging valve for spannering it is important that both halves of the sphere rotate as a unit when being unscrewed from the valve housing.

In the unlikely event of the lower half unscrewing from the upper half the operation must be stopped and the large hexagon on the upper half of the sphere used to separate the sphere from the valve housing. **Under no circumstances should the halves of the sphere be allowed to become separated with the sphere in a charged state.**

Hydraulic accumulator sphere - To discharge and dismantle

1. Carefully remove the valve cap and collect the sealing washers if not previously removed.
2. Depressurise the sphere by fitting the discharging adapter (RH 8235) to the base of the sphere and carefully screwing the adapter onto the sphere sufficiently to lift the one way valve from its seat.

This allows the nitrogen gas to escape slowly. It is not advisable to open the valve too wide or too quickly in order to quickly discharge the nitrogen gas from the sphere.

When the sphere is completely discharged remove the adapter.

3. Secure the sphere in holding tool (RH 8145) and using special pin spanner (RH 8144), remove the clamping ring in order to separate the halves of the sphere.

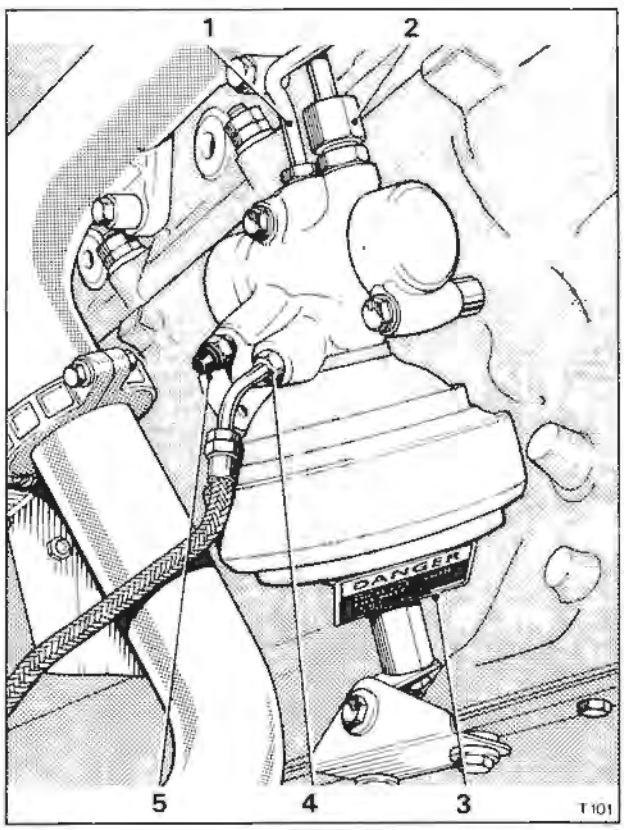

Fig. G10 Front hydraulic accumulator

1 Low pressure return to reservoir
2 High pressure inlet from pump
3 Warning plate
4 High pressure outlet to upper distribution valve
5 Bleed screw

4. Remove and discard the diaphragm.
5. In order to dismantle the one-way valve at the base of the sphere lower half, remove the circlip, washer, small spring and valve ball.

Hydraulic accumulator sphere - To assemble
Assemble the sphere by reversing the dismantling procedure noting the following points.
1. Examine the one-way valve seating and return spring. Renew the return spring if necessary.
2. Lightly tap a new steel ball onto the valve seat, then fit the spring, washer and circlip. The washer counterbore being the seating location for the spring.
3. Lightly smear the buttress threads of the clamping ring with Molytone 'C' grease or its equivalent.
4. Lay the new diaphragm in the upper half of the sphere after first wetting the uppermost face with recommended brake fluid, then fit the sphere lower half and clamping ring.

When tightening the sphere clamping ring, use a suitable torque spanner attached to special pin spanner (RH 8144) and torque tighten to the figure quoted in Chapter P.

It is essential that when tightening, the lower half of the sphere is not allowed to rotate otherwise damage to the diaphragm may result.

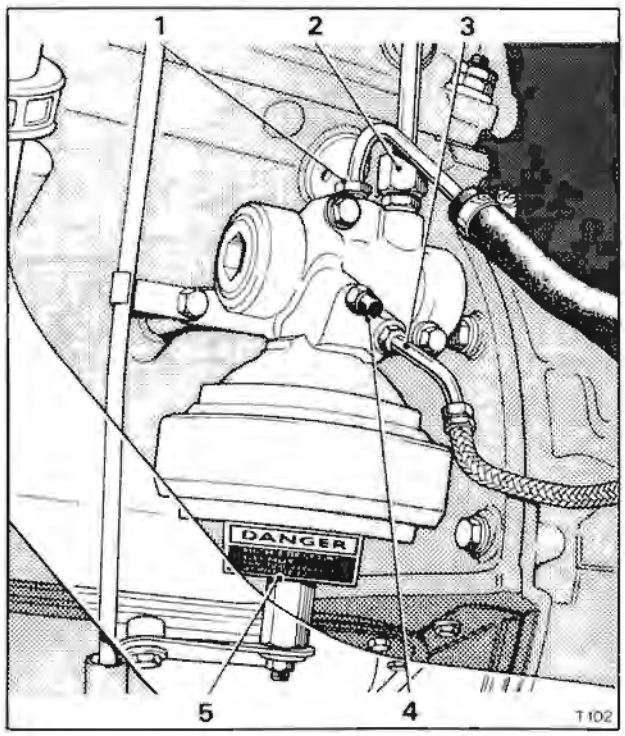

Fig. G11 Rear hydraulic accumulator
1 Low pressure return to reservoir
2 High pressure inlet from pump
3 High pressure outlet to lower distribution valve and levelling valves
4 Bleed screw
5 Warning plate

Hydraulic accumulator sphere - To charge
It should be noted that the utmost care must be taken when charging the accumulator spheres and consequently the accumulator should always be removed from the engine.

In order to control the flow of nitrogen gas from the cylinder a gauge and regulator capable of regulating to a pressure of 105 kg/sq.cm. (1500 lb/sq.in.) should be used. Connecting hoses and end fittings must be capable of withstanding a gas pressure of 281,23 kg/sq.cm. (4000 lb/sq.in.)

Before commencing to charge the accumulator sphere it should be placed in a section of the workshop away from other personnel, then surrounded by a safety shield consisting of a quantity of sand filled bags.

1. Before fitting the regulator to the nitrogen cylinder the cylinder control valve should be opened fractionally in order that the nitrogen discharged will remove any dust or grit which may be present on the cylinder valve seating.
2. Fit the regulator and high pressure connecting pipes to the nitrogen cylinder.
3. Fit the charging adapter (RH 7808) to the one-way valve at the base of the sphere.
4. Open the regulator valve sufficiently to discharge any dust and grit from the high pressure pipes.
5. Connect the high pressure pipe to the valve adapter.
6. Open the nitrogen cylinder control valve. Slowly open the regulator valve and allow the gas pressure to build up until the gauge shows a reading of 70,3 kg/sq.cm. (1 000 lb/sq.in.).
7. Close the nitrogen cylinder valve and observe the gauge; if the gauge reading does not remain steady at 70,3 kg/sq.cm. (1 000 lb/sq.in.) there is a leak either from the sphere or from the high pressure pipe connection.
8. If the pressure is maintained, remove the connecting pipe and charging adapter from the sphere.
9. Fit the warning plate, washer and charging valve cap together with a new sealing ring. Torque tighten the cap to the figure quoted in Chapter P.

Note
The valve cap should be fitted as quickly as possible after charging the sphere to provide a secondary seal as the ball valve alone may not be a completely effective seal.

10. With the fluid ports in the upper half of the sphere suitably blanked, immerse the lower half of the sphere in water until the level is above the clamping ring and check for leakage around the clamping ring and valve cap. If leakage is evident from around the clamping ring then the diaphragm is faulty, presumed damaged on assembly and must be renewed.

If leakage is observed from the charging valve cap the 'O' ring should be renewed, but the sphere must be re-charged to 70,31 kg/sq.cm. (1 000 lb/sq.in.) before the cap is refitted. The submerge test

must then be carried out again.
11. After a successful submerged test, the sphere should be thoroughly dried with dry compressed air, particular attention should be paid to the fluid ports which should be blanked off while awaiting fitting to the valve assembly.
12. A check of the accumulator pressure may be taken when the accumulator is fitted to the engine by using the hydraulic system pressure gauge rig (RH 7938) as described under the heading, Hydraulic accumulator - To test.

Hydraulic accumulator valve housing - To dismantle
1. Separate the hydraulic accumulator sphere from the valve housing as described earlier.
2. Remove the end plug from the valve housing, by using a 25,4 mm. A/F (1.00 in. A/F) Allen key or a length of hexagon bar inserted into the plug, then slacken with a suitable spanner.
3. Using a 0.250 in. U.N.F. setscrew screwed into the threaded hole of the valve sealing plug, withdraw the plug from the valve housing and discard the sealing ring.
4. Remove the sealing disc, non-return valve and the return spring from the smaller bore of the bobbin (see Fig. G12).
5. Remove the valve bobbin by gently tapping the valve housing on a piece of wood. Remove and discard the three sealing rings leaving the P.T.F.E. seal in position.
6. Remove the piston from the centre bore of the bobbin, remove and discard the combined Fluon and rubber sealing ring.
7. Remove the regulator valve, spring and adjusting washers from the valve housing.

Hydraulic accumulator valve - To inspect
1. Thoroughly wash all the components, including the valve housing in methylated spirits. Dry, using clean compressed air. Never use cloths to dry components.
2. Inspect the ball seat in the bobbin and the ball of the regulator valve for wear and ingrained dirt. Any dirt should be removed and the parts washed again in methylated spirits. Worn parts should be renewed.
3. Burnish the ball seat of the bobbin, by holding the ball on to the seat and rotating the regulator valve by hand or lightly tap a 3,96 mm. (0.156 in.) diameter ball onto the ball seat, to form a leakproof spherical seat on the bobbin.
4. Inspect all parts, renewing those which may be worn or damaged.

Hydraulic accumulator valve housing - To assemble
Assemble the valve by reversing the procedure for dismantling noting the following points.
1. Lubricate all internal parts with clean brake fluid of the approved type (see Chapter D).
2. Fit new sealing rings to the bobbin, piston and sealing plug.
The anti-extrusion washer must be fitted to the flanged side of the end 'O' ring groove on the bobbin (see Fig. G12).
3. It may be necessary to lightly tap the piston into the bore of the bobbin due to the interference fit of the new seal. This trims the seal and any particles produced must be removed. The piston must then be extracted from the bore, cleaned and fitted again using only finger pressure.
4. After assembling the non-return valve, spring, sealing disc and end plug into the bobbin, check that the non-return valve operates freely in its bore and is returned to its seat by the spring load.
5. Torque tighten the end plug and pipe adapters in accordance with the torque figures quoted in Chapter P.

Hydraulic accumulator sphere and valve housing - To fit
1. Fit a new 'O' ring to the top of the accumulator sphere and screw the sphere into the valve housing. Using the hexagon at the top of the sphere, torque tighten the sphere to the valve housing to the torque figure quoted in Chapter P.
Note
Do not use the charging valve cap as a spannering point.
2. Fit the accumulator to the engine reversing the procedure given for removal. Blanks should only be removed immediately prior to connecting the pipes.
3. All setscrews and pipe connections must be torque tightened in accordance with the figures quoted in Chapter P.
4. After fitting, top-up the fluid reservoir and test the accumulator(s) as described in Hydraulic accumulator - To test. With the engine running all joints and unions which have been disturbed must be leak free prior to tests being carried out.
5. Bleed the system(s) as described in Section G4.

Hydraulic accumulators - To test
1. Depressurise the systems as described in Section G2.
2. Remove the bleed screw from the accumulator. Connect a length of high pressure pipe, fitted with a bleed screw connection and a zero kg/sq.cm. to 210 kg/sq.cm. (zero lb/sq.in. to 3 000 lb/sq.in.) pressure gauge (RH 7938) to the bleed screw outlet of the accumulator.
3. Start the engine. The gauge needle should immediately jump to 70,31 kg/sq.cm. (1 000 lb/sq.in.) which is the nitrogen pressure in the accumulator sphere; then rise slowly to between 168 kg/sq.cm. and 182 kg/sq.cm. (2 400 lb/sq.in. and 2 600 lb/sq.in.). At this pressure the accumulator control valve should operate and the pump should cease to charge the accumulator.
4. After the cut off pressure has been reached note the pressure to which the gauge settles. This settling takes up to one minute and the pressure should not be more than 10,5 kg/sq.cm. (150 lb/sq.in.) below the cut off pressure. The pressure should then remain steady unless the brake pedal

Printed in England
© Rolls-Royce Motors Limited 1978

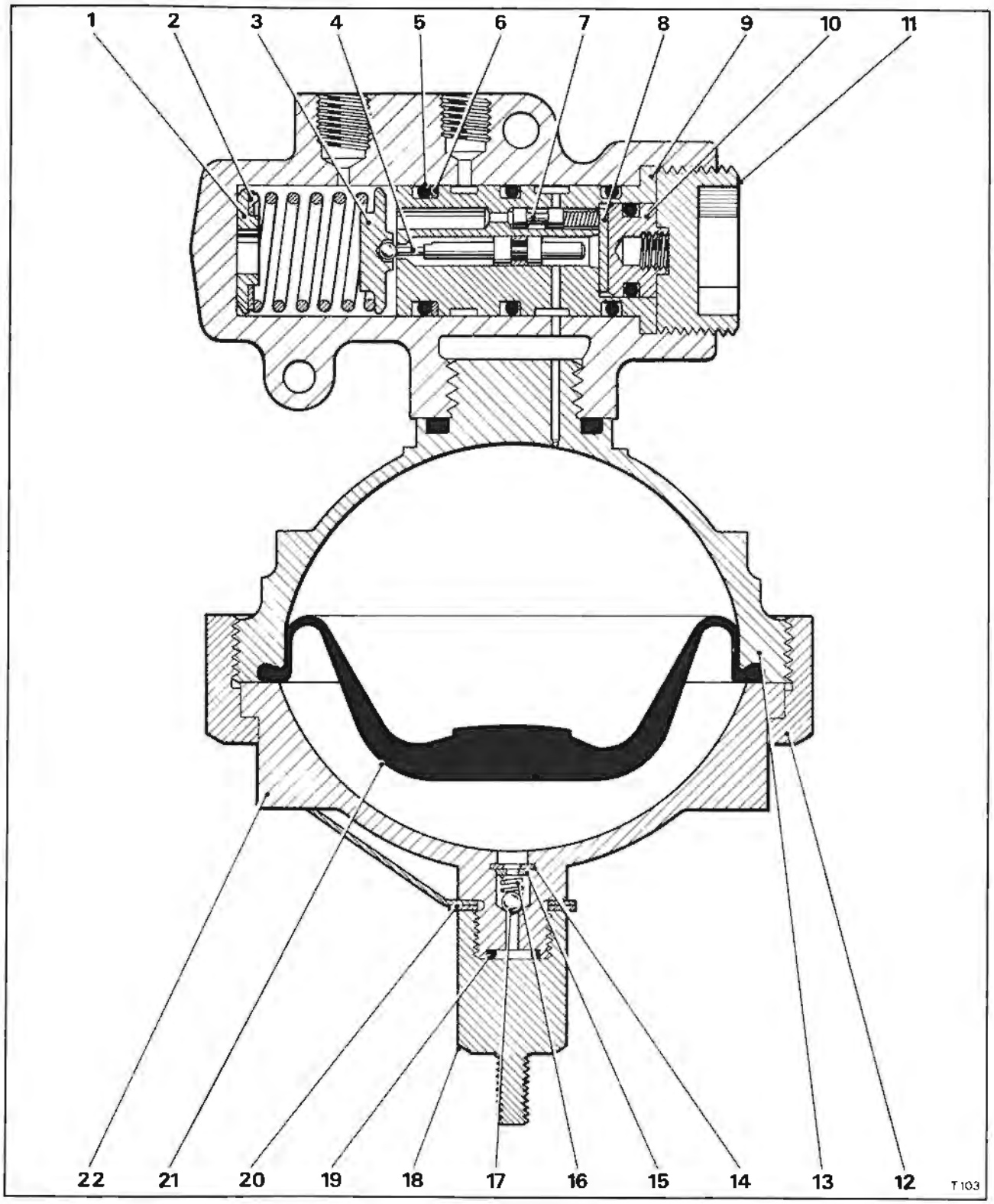

Fig. G12 Hydraulic accumulator

1 Seating washer
2 Adjusting washer(s)
3 Regulator valve
4 Piston and sealing ring
5 Bobbin sealing rings
6 Fluon washer
7 Non-return valve
8 Sealing disc
9 Valve bobbin
10 Valve sealing plug
11 End plug
12 Clamping ring
13 Sphere upper half
14 Circlip
15 Washer
16 Spring
17 Ball
18 Charging valve cap
19 Sealing ring
20 Washer and warning plate
21 Diaphragm
22 Sphere lower half

is operated, the height control is actuated or the accumulator bleed screw opened.

5. Fit a bleed pipe to the gauge connecting pipe bleed screw, open the bleed screw, thus allowing the pressure gauge reading to fall. When the pressure has fallen to between 126,55 kg/sq.cm. and 133,58 kg/sq.cm. (1,850 lb/sq.in. and 1 900 lb/sq.in.) the accumulator control valve should allow the pump to cut in again and charge the accumulator back to 175,77 kg/sq.cm. (2 500 lb/sq.in.).

If the above requirements are met the accumulator is operating correctly.

6. If, on first starting the engine, the pressure gauge needle fluctuates violently, rapidly climbs to 175,77 kg/sq.cm. (2 500 lb/sq.in.) and then immediately falls to zero when the brake pedal is depressed, this indicates a complete loss of nitrogen pressure from the accumulator sphere.

This could be caused by a leaking charging cap or a failure of the diaphragm in the sphere.

7. If when the engine is started, the gauge needle jumps to a pressure less than the accumulator nitrogen pressure of 70,31 kg/sq.cm. (1 000 lb/sq.in.) this indicates a partial loss of nitrogen pressure from the sphere. When the above condition exists the sphere must be further charged.

If, on starting the engine, the pressure gauge correctly jumps to 70,31 kg/sq.cm. (1 000 lb/sq.in.) but then fails to attain between 168 kg/sq.cm. and 182 kg/sq.cm. (2 400 lb/sq.in. and 2 600 lb/sq.in.) this could be due to the accumulator controlling at a low pressure or leakage. Should the gauge needle rise to a pressure below 168 kg/sq.cm. (2 400 lb/sq.in.) and then remain steady the accumulator valve is controlling at too low a pressure. If leakage is suspected the valve assembly should be overhauled or renewed. To adjust the accumulator controlling pressure, partly dismantle the valve housing assembly; fit sufficient adjusting washers behind the regulating spring to obtain a pressure of between 168 kg/sq.cm. and 182 kg/sq.cm. (2 400 lb/sq.in. and 2 600 lb/sq.in.). Adjusting washers are available in a range from between 0,127 mm. and 1,22 mm. (0.005 in. and 0.045 in.). If the regulator spring is renewed, fully compress the new spring several times before fitting in order to reduce initial spring pressure variation.

If observation of the gauge shows that the pump is still pumping (needle fluctuating with the pump pulses) without giving a rise in pressure then there is a leak equal to the pump flow at that pressure. Pump 'cut out' indicated by the change of audible note of the pump can be heard if the end of the engine dipstick is placed on top of the pump and used as a hearing aid.

To verify an accumulator internal leak, depressurise the systems, remove the hose connection and blank off the high pressure outlet from the accumulator. Repeat the test. If the symptoms persist then the accumulator valve body has an internal leak and the valve assembly should be overhauled. If however, the gauge now behaves correctly and the pumps can be heard to 'cut-out' the leakage is occuring downstream and further checks will be necessary in order to isolate the faulty item.

The component isolating procedure necessary to locate the fault consists of depressurising the systems then removing or blanking off the pressure feed to the various components in turn and repeating the test procedure.

The pressure feeds to the components can be readily identified from the colour coding chart (see Section G3) and the symptoms for determining whether units are functioning correctly are given under the applicable test procedures within the respective sections.

Note

When a unit has been blanked off, before removing the blank the systems must be depressurised either by continuous system operation with the engine switched off or by bleeding the appropriate accumulator until it is depressurised.

If when the engine is started, the gauge works correctly and the accumulator controls at between 168 kg/sq.cm. and 182 kg/sq.cm. (2 400 lb/sq.in. and 2 600 lb/sq.in.) but then the pressure drops steadily without brake or height control actuation, until the accumulator allows the pump to cut in again at between 130 kg/sq.cm. and 133,6 kg/sq.cm. (1 850 lb/sq.in. and 1 900 lb/sq.in.) a leak in the system is indicated and the component checking procedure should be carried out to determine the location.

After tests have been carried out involving blanking off components all blanks should be removed and components reconnected. The systems should then be bled in accordance with the information given in Section G4.

Printed in England
© Rolls-Royce Motors Limited 1978
July 1978
T.S.D. 4200

Section G8

Deceleration conscious pressure limiting valve

Introduction

The pressure limiting valve is non-adjustable and should not require servicing other than renewing the valve seals at the recommended mileage. Refer to Service Schedule Manual publication number T.S.D. 4117 for this information.

If a valve is found to be faulty, usually indicated by premature rear brake locking, it should be removed from the car and overhauled.

Pressure limiting valve - To remove

1. Place the car on a ramp and remove the undershield protecting the brake actuation linkage.
2. Depressurise the hydraulic systems as described in Section G2.
3. Disconnect the two pipes from the pressure limiting valve; blank off the pipe ends and valve ports.
4. Remove the split pins and nuts from the two valve mounting bolts; withdraw the bolts and remove the valve and distance pieces.

On left-hand drive cars the angular end plate must be removed to enable the valve and distance pieces to be removed from the mounting bolts.

Pressure limiting valve seals - To renew (see Fig. G13)

1. Remove the pressure limiting valve as described previously.
2. Remove the end plug and sealing washer from the valve body. Invert the valve and remove the spacer and ball.
3. Remove the insert and rubber seal from the bottom of the valve bore. Fit a new seal on the insert.
4. Fit the insert and seal, then the ball, spacer and end plug. Ensure that a new seal is fitted to the end plug.
5. Torque tighten the end plug to the figure quoted in Chapter P.

Pressure limiting valve - To fit

To fit the pressure limiting valve reverse the procedure given for removal noting the following.

1. All nuts must be torque tightened in accordance with the figures quoted in Chapter P prior to the split pins being fitted.
2. On completion the hydraulic systems must be bled as described in Section G4.

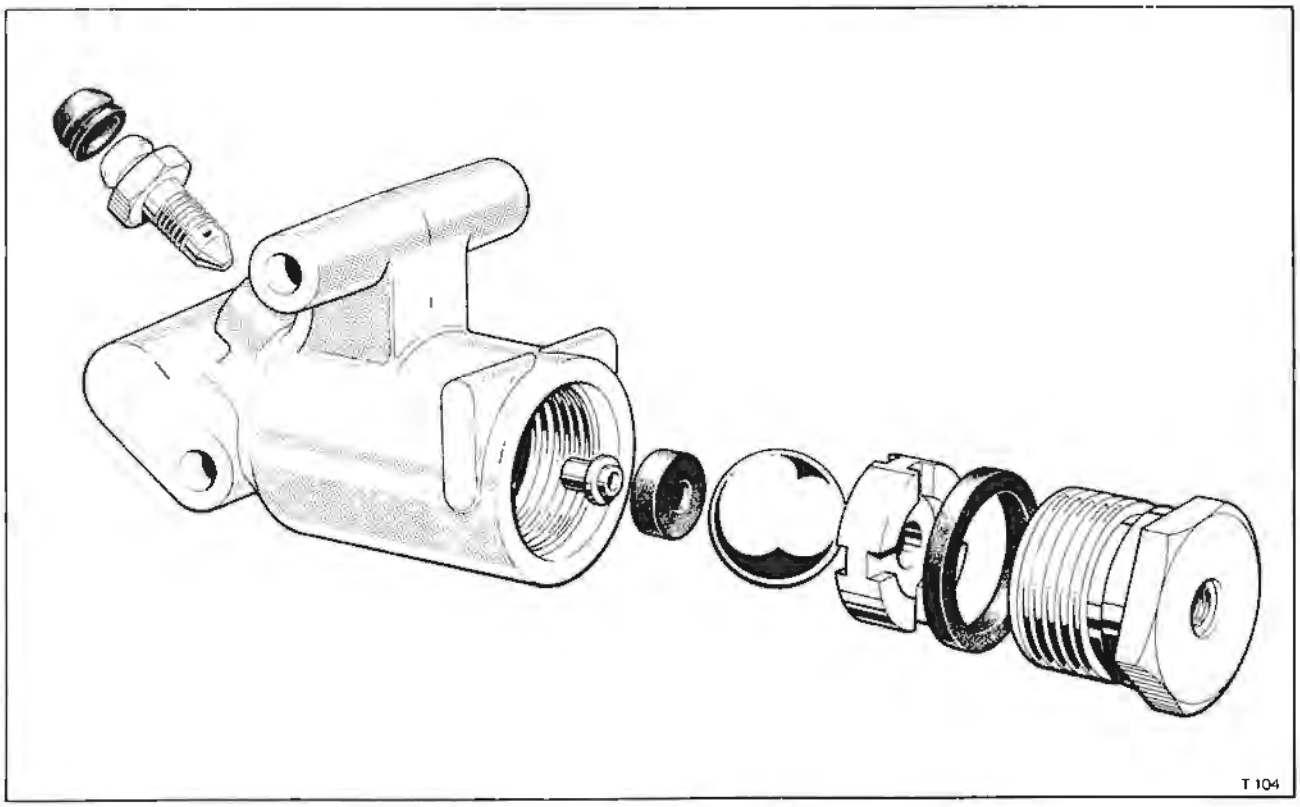

Fig. G13 Deceleration conscious pressure limiting valve

Printed in England
© Rolls-Royce Motors Limited 1978
August 1978
T.S.D. 4200

Section G9

Brake distribution valves

Introduction

The brake distribution valves are situated one above the other within the brake actuation linkage assembly and are operated through linkage and a balance lever arrangement when the foot brake is applied (see Fig. G15).

The distribution valves are identical in operation but are not interchangeable due to differing mounting points and pipe arrangements. Corresponding valves on right-hand and left-hand drive cars are identical.

Complete distribution valve assemblies are available as service exchange units. Only the rubber end cover, return spring and end plug sealing washer are available as separate items. The remaining working parts are subject to very fine limits and are therefore selectively assembled by the manufacturer.

Note

The design of the valve is such that to provide adequate lubrication to the 0,0025 mm. (0.0001 in.) clearance between the operating valve and its bore a small fluid 'leak-off' is permitted. This leakage is visible and takes the form of a small droplet of fluid hanging from the valve base. This is normal.

When deciding whether a valve is leaking excessively, in order to warrant renewal or overhaul; if the fluid 'leak-off' does not impair the braking efficiency of the car or cause a noticeable drop in fluid level in the reservoir, then the valves should be regarded as satisfactory.

Brake distribution valves - To test (on the car)

1. Place the car on a ramp. Isolate the gearchange selector and depressurise the systems as described in Section G2.
2. Remove the undershield from around the brake actuation linkage.
3. Connect a zero kg/sq.cm. to 210 kg/sq.cm. (zero lb/sq.in. to 3 000 lb/sq.in.) pressure gauge with a length of high pressure pipe attached, into the high pressure outlet port of the distribution valve (blue or mauve pipe) or into any convenient junction between the valve and the brake calipers it supplies. The brake caliper bleed screw ports may be used if desired.
4. Start the engine then depress the brake pedal. The brake line pressure shown on the gauge should be proportional to the load applied to the pedal provided the accummulators are fully charged. For a 20,4 kg. (45 lb.) load on the pedal, the line pressure should be approximately 70,31 kg/sq.cm. (1 000 lb/sq.in.). It should also be possible to achieve a line pressure of 140,62 kg/sq.cm. (2 000 lb/sq.in.) for a pedal pressure of approximately 34,0 kg. (75 lb.).

When the brake pedal load is varied continuously, the brake line pressure should vary accordingly, without any marked lag or jerkiness.

If the above effort/pressures are not obtainable or actuation shows marked lag or jerkiness on the gauge, the distribution valve may be considered faulty and must be overhauled or renewed.

5. If a system internal leakage investigation, as described under Hydraulic accumulator - To test, show a distribution valve to be the cause of a loss of accumulator pressure the actual leakage can be checked as follows.
6. Disconnect the low pressure return line from the distribution valve port (black or white pipe). Blank the end of the pipe to prevent drainage of the reservoir.
7. Insert a union and a length of pipe into the distribution valve low pressure return port and place the open end of the pipe into a clean container.
8. Start the engine but do not depress the brake pedal.
9. Top-up the reservoir continuously to prevent the hydraulic fluid from falling below the 'minimum' level mark.

For the valve to be acceptable the fluid leakage should not exceed 25 ml. per half hour with the valve in the 'off' position (ie. brake pedal not applied) or 50 ml. per minute with the brake pedal depressed and held steady under a load of 20,41 kg. (45 lb.) which is equivalent to a brake line pressure of 70,31 kg/sq.cm. (1 000 lb/sq.in.). If the valve leakage exceeds these figures it must be overhauled or renewed.

Brake distribution valves - To remove

1. Place the car on a ramp and depressurise the hydraulic systems as described in Section G2.
2. Remove the undershield from around the brake actuation linkage.
3. Remove the pipes from each valve. Blank off the pipe ends and valve ports.
4. Unlock and remove the securing bolts from each valve, draw the rubber boot seal off the valve. Taking care not to bend the valve actuation push rod, move each valve forward and downward, out of the actuation linkage assembly.

Printed in England
© Rolls-Royce Motors Limited 1978
August 1978
T.S.D. 4200

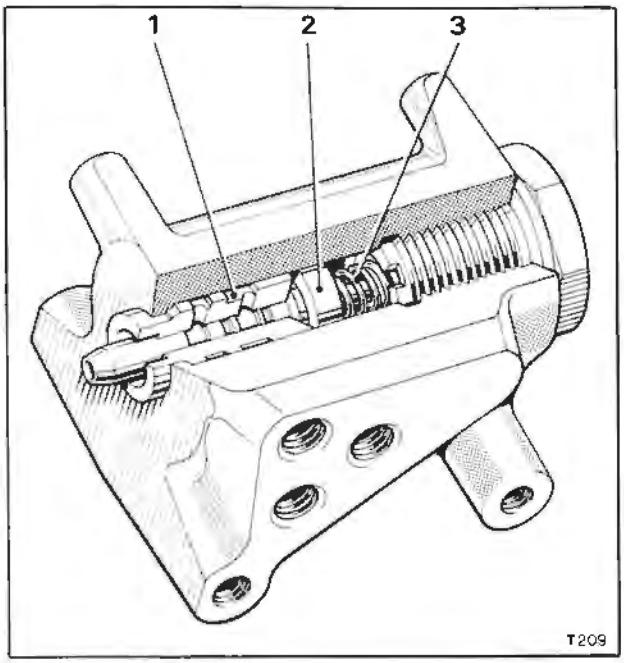

Fig. G14 Distribution valve
1 Valve insert
2 Valve stem
3 Return spring

Brake distribution valve - To dismantle (see Fig. G14)
1. Remove the end plug and sealing washer; collect the return spring.
2. Carefully remove the valve stem. Extreme care should be taken to ensure that the valve stem and its operating bore do not become scratched or damaged.
3. Carefully wash all parts in methylated spirits and dry with clean, dry compressed air.

Brake distrubition valve - To inspect
1. Carefully examine the fine limit bore of the valve insert and the outside diameter of the valve stem. Each surface should be smooth and free from scratches.
2. Lubricate the bore of the valve insert and the valve stem with clean brake fluid. Carefully fit the valve stem into the valve insert bore and check for any axial wear. There should only be sufficient clearance to allow the valve stem to slide freely in the bore, the stem and bore having a clearance of 0,0025 mm. (0.0001 in.).
3. Wash the parts in methylated spirits and dry with clean, dry compressed air.

Brake distribution valves - To assemble
1. Lubricate the bore of the valve insert and the valve stem with approved brake fluid (see Chapter D).
2. Carefully insert the valve stem into the valve insert bore until fully seated. Fit a new return spring.
3. Fit a new sealing washer to the end plug. Fit and torque tighten the plug to the figure quoted in Chapter P.
4. Ensure that the inward and return movement of the valve stem is smooth and does not bind or stick at any point along its travel.

Brake distribution valves - To fit
Fit the distribution valves by reversing the procedure given for removal noting the following points.
1. If a replacement valve is being fitted, remove one of the blanking plugs and allow any fluid to drain from the valve. Re-fit the plug.
2. Torque tighten the mounting bolts and pipe connections in accordance with the figures quoted in Chapter P. Lock the securing bolt tab washers.
3. On completion the hydraulic systems must be bled as described in Section G4.

Printed in England
© Rolls-Royce Motors Limited 1978
August 1978
P.S.D. 4200

Section G10

Brake actuation linkage assembly

Introduction

The brake actuation linkage assembly is mounted just rearward of the toe-board. On right-hand drive cars the assembly is positioned just inboard of the body sill. On left-hand drive cars the assembly is fitted adjacent to the inner side of the body longeron.

The assembly houses the distribution valves, deceleration conscious pressure limiting valve and the stop lamp switch; the assembly being the same for both right and left-hand drive cars.

Brake actuation linkage assembly - To remove

1. Place the car on a ramp; depressurise the hydraulic systems as described in Section G2.
2. Disconnect the battery.
3. Remove the undershield from around the linkage assembly.
4. Disconnect the Lucar connections, then remove the brake stop lamp switch and mounting bracket.
5. Remove the brake pedal pinch bolt from the upper end of the brake pedal lever and ease the pedal stem out of the lever. Collect the rubber seal.
6. Disconnect the pipes from the distribution valves and deceleration conscious pressure limiting valve. Blank off all exposed pipe ends and valve ports.

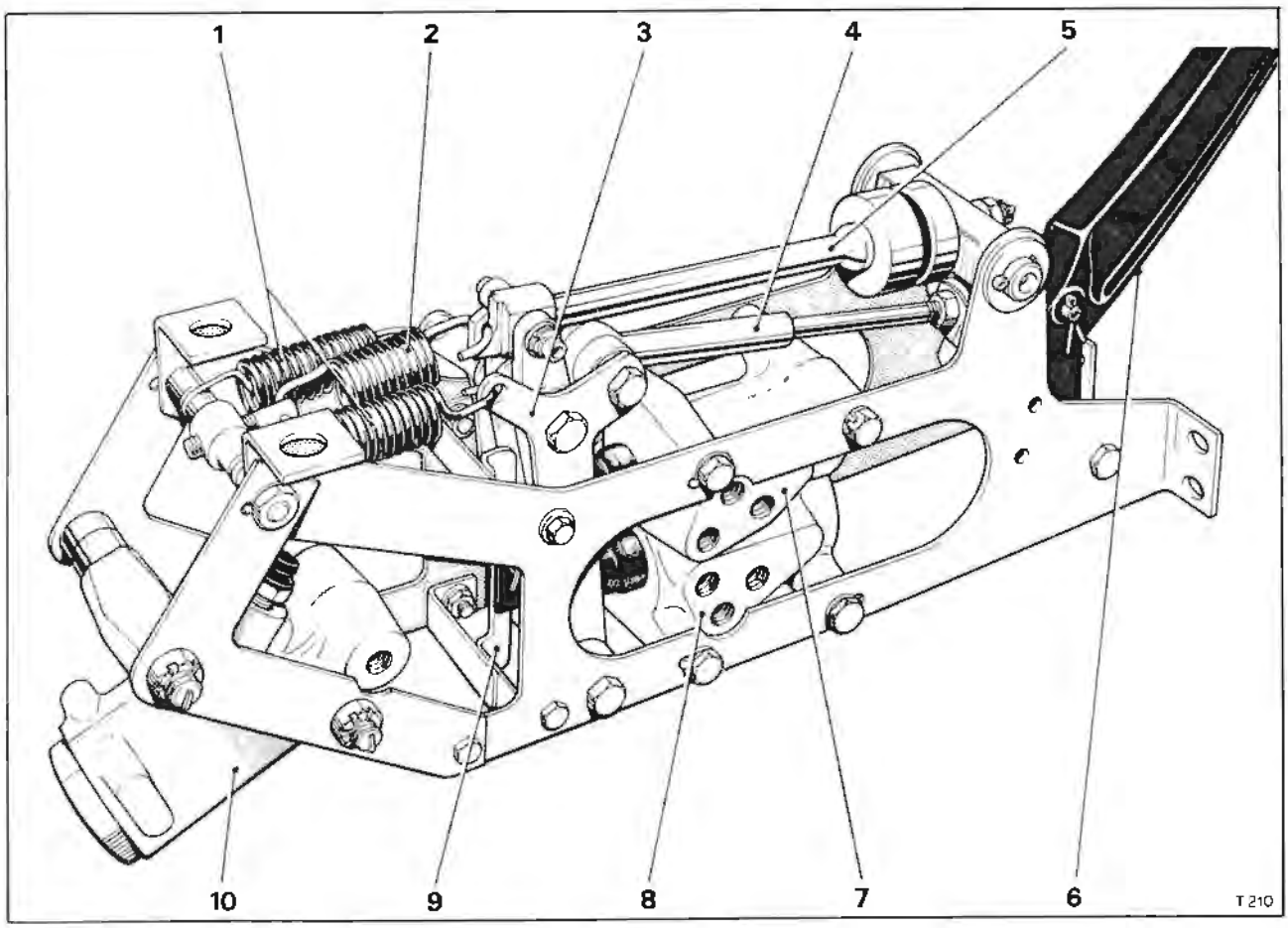

Fig. G15 Brake actuation linkage assembly

1 Return springs
2 Pedal 'feel' spring
3 Balance lever assembly
4 Brake actuation rod
5 Pedal 'feel' rod
6 Brake pedal lever
7 Upper distribution valve (System 1)
8 Lower distribution valve (System 2)
9 'Off' stop bracket
10 Deceleration conscious pressure limiting valve

7. On right-hand drive cars disconnect the petrol pipe clip from the linkage side mounting bracket.
8. Remove the setscrews (right-hand drive cars) or bolt and nuts (left-hand drive cars) securing the linkage assembly side plates at the forward end. Support the linkage assembly and remove the two rear securing setscrews. Lower the assembly from the car.

On left-hand drive cars, the brake pedal lever must be withdrawn from the rubber sealing boot when lowering the actuation linkage from the car.

Important

Under no circumstances should the brake actuation assembly be allowed to hang from the brake pedal, supported by the actuation rod,as this may result in the rod being bent.

Brake actuation linkage - To dismantle

Prior to dismantling the linkage note should be taken of the relative positions of the distance pieces and bolt directions (see Figs. G15 and G16.).
1. Remove the brake actuation linkage from the car as described previously.
2. Remove the split pin and clevis pin from the operating rod pivot on the brake pedal lever.
3. Remove the three springs from the rear of the linkage.

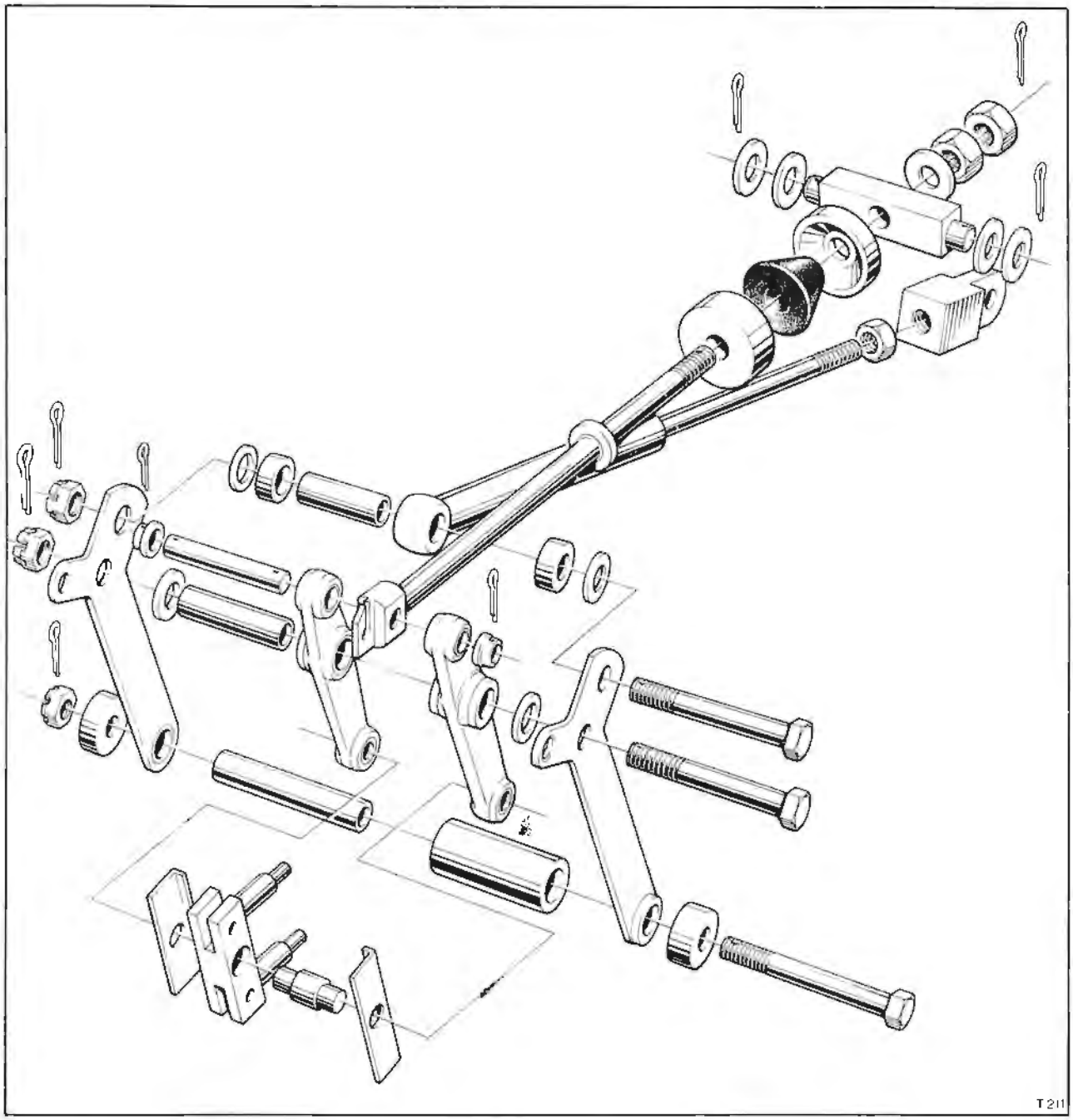

Fig. G16 Brake actuation linkage balance lever assembly

4. Remove the split pin and nuts from the end of the pedal 'feel' rod.
5. Remove the 'off' stop bracket from behind the balance levers.
6. Remove the pivot bolt from the lower end of the balance levers. Ease the levers rearward and carefully withdraw the balance lever push rods from the distribution valves. Remove the distance pieces and pivot tube from the lower end of the balance levers.
7. Lift the levers clear of the side plates and withdraw the 'feel' rod from its retaining bar. Collect the conical rubber and abutment cups.
8. Remove the split pin from one side of the 'feel' rod pivot pin; withdraw the pin and collect the collar.
9. Remove the two bolts retaining the pivot arms to the balance levers. Noting their positions collect the washers, distance pieces and pivot tubes.
10. Remove the balance levers from each side of the distribution valve push rod equalising block, collect the pin retaining plates.

Note
The levers and pivot pins are clearance fits and are easily removed.

Brake linkage assembly bushes and pivot pins - To renew
1. Remove and dismantle the brake linkage as described previously.
2. Carefully press the bushes requiring renewal out of their locations and fit new bushes. The bush bores are machined to final size, therefore no reaming or boring is necessary.
3. Any pivot pins that are worn or damaged must be renewed.

Brake actuation linkage - To assemble
Assemble the linkage by reversing the dismantling procedure noting the following points.
1. Clean all components prior to assembly. Lightly lubricate the linkage pivots, the protruding parts of the distribution valve stems and the push rod location bores with Molytone 'C' grease.
2. All bolts and nuts must be torque tightened to the figures quoted in Chapter P before split pins are fitted and tab washers secured.
3. The linkage should operate freely when located between the assembly side mounting plates. All levers must be absolutely free to move with negligible friction on their pivots. Distance tubes must be similarly free in the Oilite bushes.

Note
All bolts should be fitted in the directions shown in Figure G15 in order that certain individual items may be removed without removing the complete assembly from the car.

Brake actuation linkage - To adjust
Adjustment of the actuation linkage should be carried out in the following sequence.
(a) Distribution valve push rod clearance.
(b) Rubber 'feel' cone setting.
(c) Main 'feel' spring setting.
(d) Brake pedal height setting.

Note
Adjustments 'a', 'b' and 'c' can be carried out with

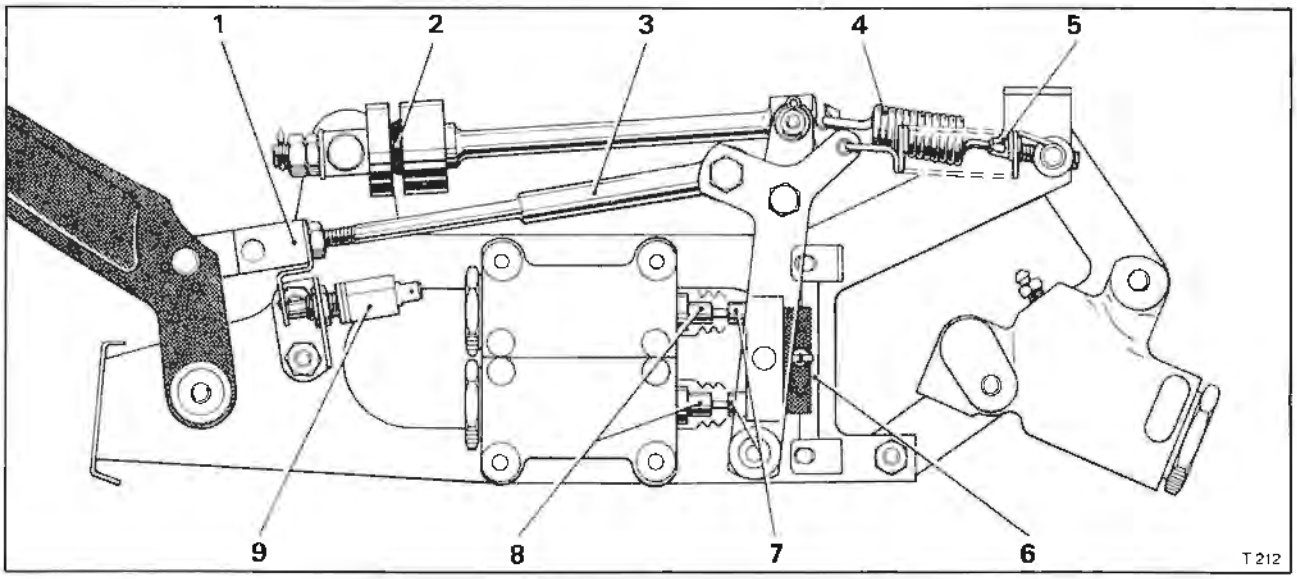

Fig. G17 Brake actuation linkage adjustment points
1 Brake pedal lever adjustment block
2 Rubber 'feel' cone
3 Brake actuation operating rod
4 Main 'feel' spring
5 'Feel' spring adjustment screw
6 Off stop bracket
7 Balance lever push rods
8 Distribution valve stems
9 Brake stop lamp switch

Printed in England
© Rolls-Royce Motors Limited 1978
August 1978
T.S.D. 4200

the actuation linkage assembly removed from the car.

Distribution valve push rods - To set (see Fig. G17)
1. Slacken and unscrew the brake 'feel' rod adjusting nuts until clearance is obtained between the feel rod mounting block and the rubber cone seat.
2. Remove the 'feel' and return springs.
3. Slacken the four bolts securing the 'off' stop bracket to the actuation linkage side plate.
4. Slide the 'off' stop bracket forward on the elongated holes until a clearance of up to 0,254 m.m. (0.010 in.) is obtained between the balance lever push rods and the distribution valve stems; with no preload being applied to the valve stems. Ensure that the setting is equal on each valve, then tighten the bracket securing bolts.

Note
It will be necessary to draw back the two rubber dust covers on the distribution valves in order to check the push rod to distribution valve stem clearance.

Rubber 'feel' cone - To set (see Fig. G17)
1. Fit the two return springs to the linkage assembly. At this point the two abutment cups and the rubber 'feel' cone should be loose and free to slide on the shaft.
2. Tighten the adjusting nut until the clearance between the abutment cups and the rubber cone has been removed, without a preload being applied to the rubber cone.
3. Securely tighten the lock-nut onto the adjusting nut, then depress and release the brake pedal several times to ensure that the cone is seated correctly. Recheck the cone setting. Ensure that a security split pin is fitted to the end of the shaft.

Main 'feel' spring - To set (see Fig. G17)
1. Ensure that the actuation assembly remains in the 'off' position.
2. Fit one end of the 'feel' spring into the adjusting screw fitted in the centre of the spring anchor rod.
3. Rotate the spring and screw half a turn at a time in the direction required until the spring can be fitted into the 'feel' rod hook, with no clearance between the spring and hook, ensure that there is no spring preload.

Note
It is necessary to stretch the spring over the hook to obtain the correct position where clearance is determined.

4. Remove the spring from the hook and rotate the spring and screw 1½ turns clockwise, when viewed from the brake pedal end of the assembly (ie. effectively tensioning the spring). Fit the spring onto the hook.

Note
It is essential to follow both of the previous setting instructions accurately as deviations will completely alter the subjective feel and accepability of brake control.

Clearance between the rubber 'feel' cone and its abutments will cause a spongy, long travel pedal feel at low decelerations; any preload on this rubber will cause jerky initial braking under these conditions.

Inadequate preload on the rear tension spring will produce unwanted free travel at tha pedal followed by jerky initial braking; too much preload on this spring will give jerky initial braking followed by a period of 'spongy' pedal travel.

Brake pedal height setting (see Figs. G18 and G19)
This setting can only be carried out with the actuation linkage assembly fitted to the car.
1. Locate the setting gauge into the brake pedal stem hole in the end of the pedal lever (see Fig. G18). Raise the pedal lever until the gauge touches the underside of the toe-board seal housing.
2. Adjust the block on the lever operating rod until the hole in the block aligns with the hole in the pedal lever.

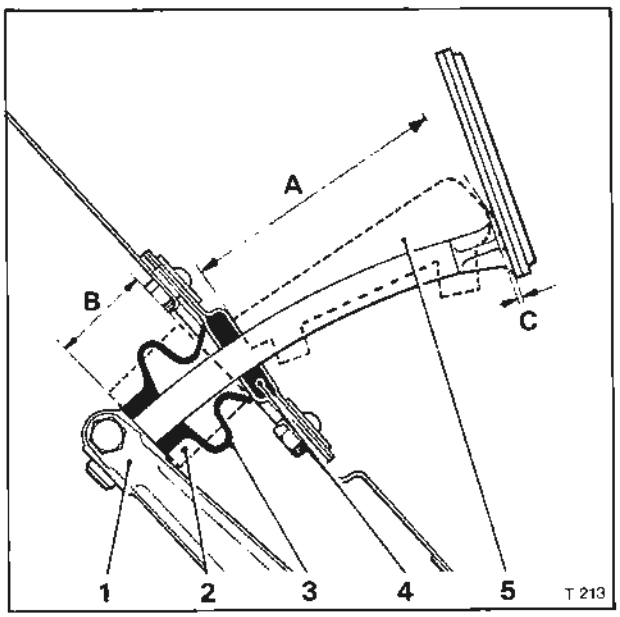

Fig. G18 Brake pedal height settings
1 Brake lever
2 Brake lever setting gauge
3 Rubber seal
4 Toe-board seal and housing
5 Pedal height checking template
A 99,06 mm. to 98,30 mm. (3.90 in. to 3.870 in.)
B 38,10 mm. to 37,97 mm. (1.50 in. to 1.495 in.)
C 0,38 mm. to 5,08 mm. (0.015 in. to 0.20 in.)

Note
Shortening the rod length reduces the gap between the pedal lever and seel plate, half a revolution of the block being equal to approximately 3,17 mm. (0.125 in.) of pedal lever movement.

3. Remove the setting gauge from the brake lever. Connect the rod to the lever by inserting the clevis pin. Fit the split pin.

4. Fit the rubber seal between the brake pedal lever and toe-board seal plate.

On left-hand drive cars slide the convoluted rubber seal over and down the brake pedal lever; fit the two retaining screws and washers. Ensure that the seal does not prevent the lever and linkage returning to the fully 'off' position.

5. Insert the brake pedal through the toe-board felt and rubber seals into the hole in the brake pedal lever.

6. Fit and tighten the pinch bolt to secure the brake pedal lever.

7. Check that the rubber seal does not prevent the actuation linkage returning to the 'off' position and that the brake pedal does not foul the seal housing at any point along its travel.

8. Fit the brake stop lamp switch and adjust the setting as described under Brake stop lamps switch - To adjust.

Brake pedal height - To check

1. Place the checking template as shown in Figure G18 between the underside of the brake pedal and the upper surface of the pedal seal housing with the two lugs of the gauge located under the pedal stem. Rest the flat base of the template on the seal housing. Ensure that both carpet and underlay are removed from the housing surface.

2. If the clearance between the top of the template and the underside of the pedal is less than 0.38 mm. (0.015 in.) or more than 5,08 mm. (0.20 in.) adjust the length of the pedal lever rod as described in Brake pedal height setting.

Brake pedal lever - To remove

1. Place the car on a ramp and remove the under-shield from around the brake actuation linkage.

2. Disconnect the battery.

3. Disconnect the Lucar connections and remove the stop lamp switch.

4. Remove the brake pedal stem pinch bolt from the top of the pedal lever and withdraw the stem out of the lever. Collect the rubber seal from the pedal stem.

5. Remove the split pin and clevis pin from the operating rod pivot on the pedal lever.

6. Remove the bolt and nut from the pedal lever pivot. Remove the lever and collect the pivot tube. On left-hand cars it is necessary to withdraw the lever from the convoluted rubber seal during final removal.

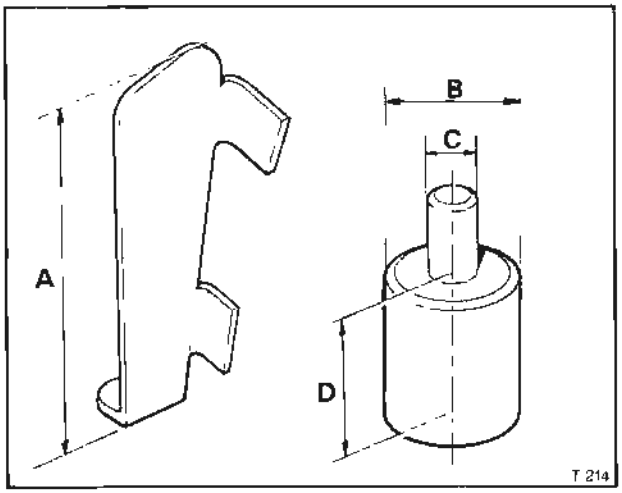

Fig. G19 Brake pedal setting gauge and checking template

- **A** 99,06 mm. to 98,30 mm. (3.90 in. to 3.870 in.)
- **B** 34,92 mm. to 34,29 mm. (1.375 in. to 1.350 in.)
- **C** 12,50 mm. to 12,44 mm. (0.492 in. to 0.490 in.)
- **D** 38,10 mm. to 37,97 mm. (1.50 in. to 1.495 in.)

Brake pedal lever - To fit

To fit the brake pedal lever reverse the procedure given for removal noting the following points.

1. All nuts must be torque tightened to the figures quoted in Chapter P.

2. The pedal lever and the stop lamp switch must be checked for correct operation and adjusted if necessary as described under the appropriate headings in this section.

Brake stop lamp switch - To adjust

With all other adjustments to the brake actuation linkage and brake pedal completed, set the brake stop lamp switch as follows.

1. Slacken the nuts retaining the stop lamp switch to the switch mounting bracket.

2. Switch on the ignition.

3. Adjust the switch position until the stop lamps are illuminated during the initial movement of the footbrake pedal; between 3,2 mm. and 9,5 mm. (0.125 in. and 0.375 in.) of brake travel.

4. Tighten the retaining nuts and again check the stop lamps for operation.

5. Switch off the ignition.

Printed in England
© Rolls-Royce Motors Limited 1978
August 1978
T.S.D. 4200

Section G11

Solenoid and Restrictor valves

Printed in England
© Rolls-Royce Motors Limited 1978
August 1978
T.S.D. 4200

Introduction

The height control solenoid valve and both the high pressure and low pressure restrictor valves are situated on the rear face of the rear suspension crossmember.

A complete solenoid valve can be obtained as a service exchange item or the valve dismantled and overhauled as follows.

Solenoid valve - To remove

1. Depressurise the hydraulic systems as described in Section G2.
2. Disconnect the battery.
3. Remove the Lucar connections from the solenoid valve.
4. Disconnect the three hydraulic pipes and blank off the pipe ends and solenoid valve ports.
5. Remove the two setscrews securing the solenoid valve to the rear suspension crossmember. Remove the solenoid valve.

Solenoid valve - To dismantle (refer to Fig. G20)

1. Remove the retaining clips from the protective rubber cover. Remove the cover to expose the solenoid end face.
2. Unlock the tab washer and remove the nut; discard the tabwasher.
3. Remove the flux plate, carefully withdrawing the two cables from the plate.
4. Note the position of the sealing ring situated immediately behind the flux plate to facilitate assembly (see Fig. G22). Remove and discard the sealing ring.
5. Carefully withdraw the coil from the housing.
6. Remove the spacer.
7. Remove the housing from the solenoid body; remove and discard the sealing ring.
8. From the opposite end of the solenoid valve, remove the lock-nuts then unscrew and remove the valve seat. Remove and discard the sealing ring.
9. Remove the bobbin assembly from the main bore of the solenoid valve. Collect the shims which are situated between the faces of the bobbin and cone valve.
10. Remove the cone valve body from the main bore of the solenoid valve; remove and discard the sealing ring.
11. Remove the cone valve from the body and collect the return spring.
12. Wash all non-electrical parts in methylated spirits and dry with clean dry compressed air, not cloth. Wipe clean the electrical components.
13. Inspect the components for any signs of wear and damage, renew as necessary. Check that the two valves are seating correctly.
14. Check the insulation resistance of the coil. The resistance between either lead and the coil measured at 250 volts DC must not be less than 2 megohms. Renew the coil if necessary.

Note

If leakage is suspected from the joint seal between the solenoid body and extension, the sub-assembly should be renewed. No attempt should be made to correct the fault.

Solenoid valve - To assemble (refer to Figs. G21 and G22)

Assemble the solenoid valve by reversing the dismantling procedure noting the following points.

1. It is essential that all parts are thoroughly cleaned before assembly.
2. Fit the sealing ring to the main valve body. Lightly lubricate the sealing ring with Molytone 'C' grease then slide the outer casing into position.
3. Lubricate the non-electrical components and sealing rings with approved brake fluid (see Chapter D). Note the position of the sealing ring situated between the coil and the flux plate. This ring must be left dry, then cut and suitably positioned to clear the electrical wiring (see Fig. G22).
4. Assemble the bobbin, cone valve and cone valve body without the return spring. Selectively fit shims to point Y shown in Figure G21 until a gap of between 0,20 mm. and 0,28 mm. (0.008 in. and 0.011 in.) is obtained at point Z with the cone valve fully seated. Carefully remove the cone valve body and fit the cone valve return spring prior to fitting the assembly into the main body bore.
5. Set the gap X between the opposing faces of the valve and bobbin assembly and the valve seat to between 0,508 mm. and 0,635 mm. (0.020 in. and 0.025 in.). To obtain this setting, energise the solenoid; push the valve seat fitted with a new sealing ring into the bore of the body assembly; screw in the adjusting sleeve until the valve seat touches the nylon seat of the bobbin.

Checking with a dial test indicator or depth micrometer screw out the adjusting sleeve between 0,508 mm. and 0,635 mm. (0.020 in. and 0.025 in.). Fit and tighten the large lock-nut ensuring that the adjusting sleeve is not rotated.

De-energise the solenoid. This pushes the valve seat against its stop on the adjusting screw. Fit

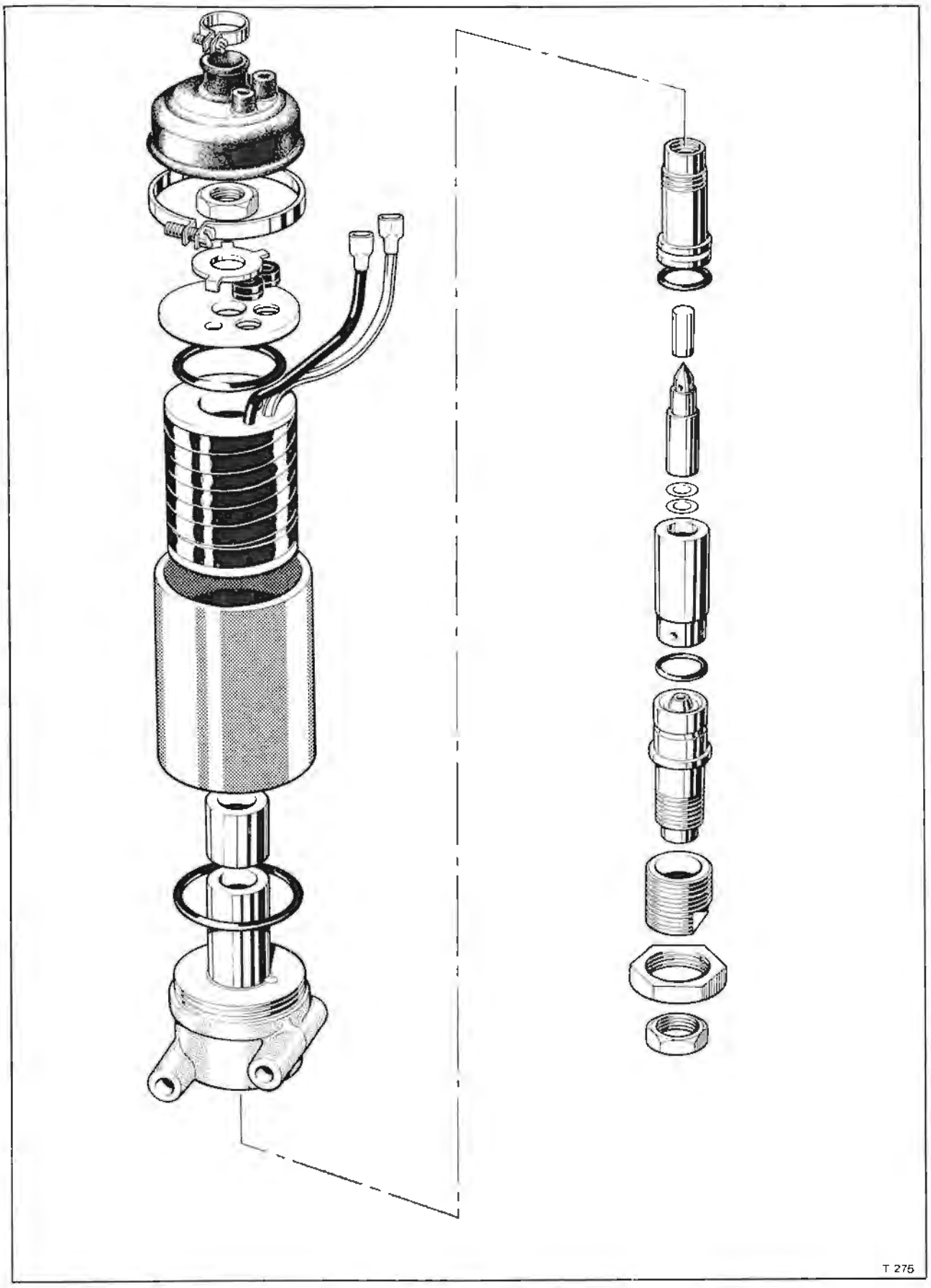

Fig. G20 Height control solenoid valve

and tighten the lock-nut to the valve seat. To avoid damage to the sealing ring ensure that the valve seat does not rotate in the housing.

Note

It is important all the lock-nuts are tightened in the above order and in accordance with the torque figures quoted in Chapter P.

6. Ensure that the solenoid protective rubber cover is clean and in good condition before fitting, renew if necessary.

7. Fit blanking plugs to each port of the valve until the valve is fitted to the car.

Solenoid valve - To fit

Fit the solenoid valve by reversing the procedure given for its removal noting the following points.

1. Torque tighten the setscrews and pipe connections in accordance with the figures quoted in Chapter P.

2. After fitting, bleed the hydraulic system as described in Section G4.

Solenoid valve - To test

If either 'slow' or 'fast' height control is not available the solenoid valve may be checked for correct operation on the car as follows.

1. Run the engine to fully charge the hydraulic systems. Stop the engine but leave the ignition switched on.

2. Disconnect one of the electrical connections from the solenoid valve. This disconnection should cause a light audible click from the solenoid valve. If this is not apparent the valve or electrical circuit is faulty.

If during this valve disconnection test a 'hissing' noise is evident when the electrical

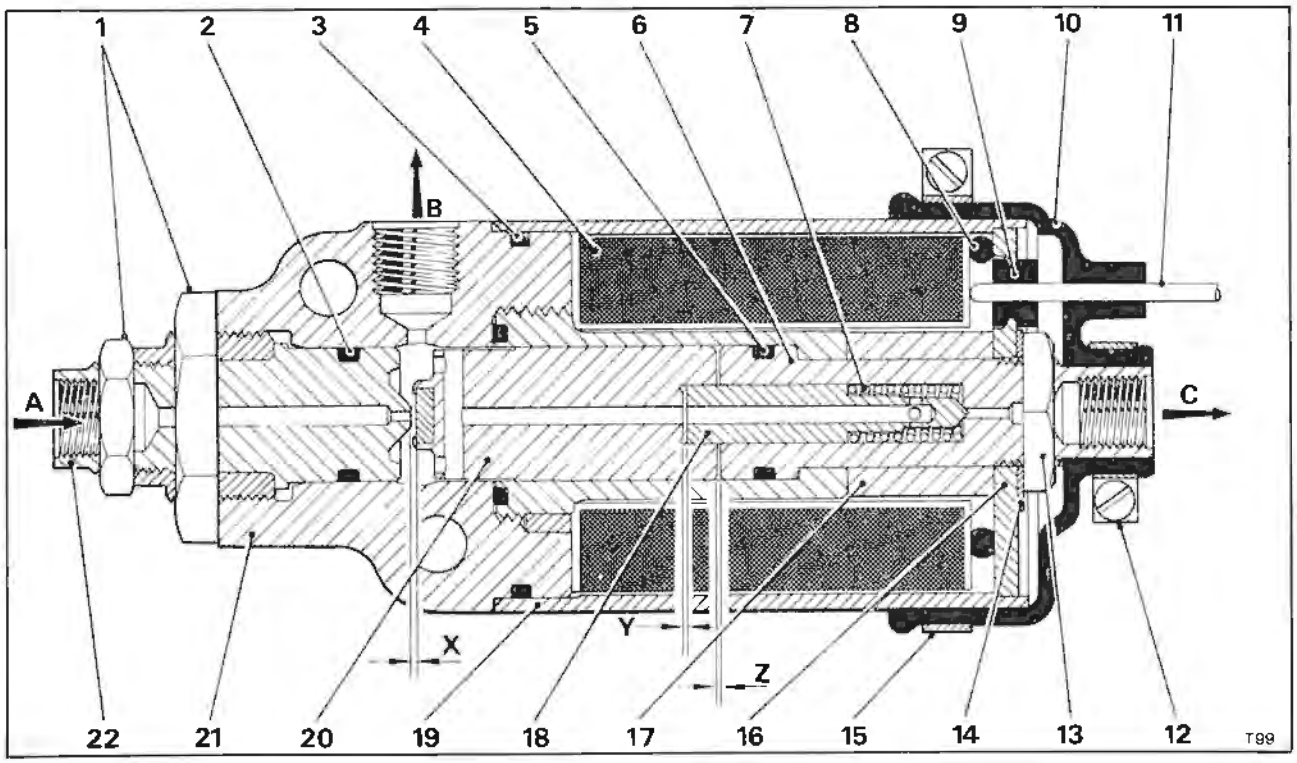

Fig. G21 Height control solenoid valve

1 Locknuts
2 Valve seat sealing ring
3 Coil housing sealing ring
4 Coil
5 Cone valve body sealing ring
6 Cone valve body
7 Return spring
8 Sealing ring (see Fig. 22)
9 Grommet
10 Protective cover
11 Lucar connector lead
12 Retaining clip
13 Lock nut
14 Tabwasher
15 Retaining clip
16 Flux plate
17 Spacer
18 Cone valve
19 Coil housing
20 Bobbin
21 Body and extension assembly
22 Valve seat
A High pressure inlet
B Connection to height control valves
C Low pressure return to reservoir
X Gap 0,50 mm. to 0,63 mm. (0.020 in. to 0.025 in.)
Y Shims - suitable thickness to obtain gap Z
Z 0,20 mm. to 0,28 mm. (0.008 in. to 0.011 in.)

Printed in England
© Rolls-Royce Motors Limited 1978
August 1978
S.D. 4200

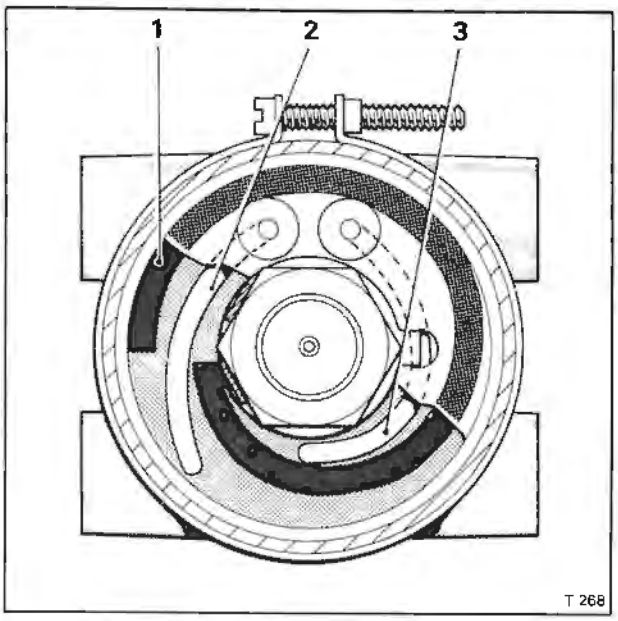

Fig. G22 Height control solenoid valve sealing ring position
1 Sealing ring (cut and positioned)
2 Lucar connector lead
3 Lucar connector lead

connection is disconnected a faulty high pressure valve seat is indicated and the solenoid valve must be overhauled or renewed.

3. Check the electrical circuit by removing the two electrical connections from the solenoid valve and connecting a jumper lead and lamp across the two leads. When the ignition is switched on the lamp should illuminate if the electrical circuit is operating correctly.

4. Remove the jumper lead and lamp and connect it between the solenoid valve terminal and one of the disconnected wires; connect the other wire to the solenoid. If the lamp illuminates when the ignition is switched on, the windings are sound. If the windings are faulty the solenoid valve must be overhauled or renewed.

5. If it has been determined that the solenoid valve is operating correctly but 'fast' height control is still not operating, the solenoid valve restrictors should be checked for blockage as described under Solenoid valve restrictor - To dismantle.

If however it is evident that a leak is occuring in the system, to determine whether the solenoid valve is the cause proceed as follows.

6. Depressurise the systems.

7. Disconnect the solenoid return pipe from the solenoid valve (white line) and blank off the pipe. Insert a union and a length of pipe into the solenoid port and place the open end of the pipe into a clean container.

8. With the solenoid valve electrical leads disconnected (solenoid de-energised) start the engine and charge the hydraulic systems. The valve should hold the pressure internally with no leakage from the return pipe port.

9. Connect the electrical leads to the solenoid valve (solenoid energised) and again check that the valve holds internal pressure. A maximum leakage of 10 ml. from the return pipe port is permissible.

10. If the solenoid is then de-energised, with pressure applied to the inlet port, fluid should flow from the return port for a few seconds then cease. It should be noted however that if fluid does not flow from the port, the cause may be due to there being an easier fluid leak path elsewhere in the system or that the restrictor valves are blocked.

Solenoid valve restrictor - To remove

The two solenoid valve restrictors are incorporated into the high pressure (orange) pipe line and low pressure (white) pipe line respectively. They are both mounted on the rear suspension crossmember.

1. Depressurise the systems as described in Section G2.
2. Disconnect the hydraulic pipes from the restrictor and blank off the pipe ends.
3. Remove the setscrew securing the restrictor to the crossmember. Remove the restrictor.

Solenoid valve restrictor - To dismantle (refer to Fig. G23)

1. Remove the union plug from the restrictor body.
2. Invert the restrictor valve body and collect the sealing ring, restrictor plate, restrictor roller and end plates.
3. Thoroughly clean all components with methylated spirits and dry with clean compressed air.

Solenoid valve restrictor - To assemble

Assemble the restrictor by reversing the dismantling procedure noting the following points.

1. All parts must be thoroughly cleaned before assembly.

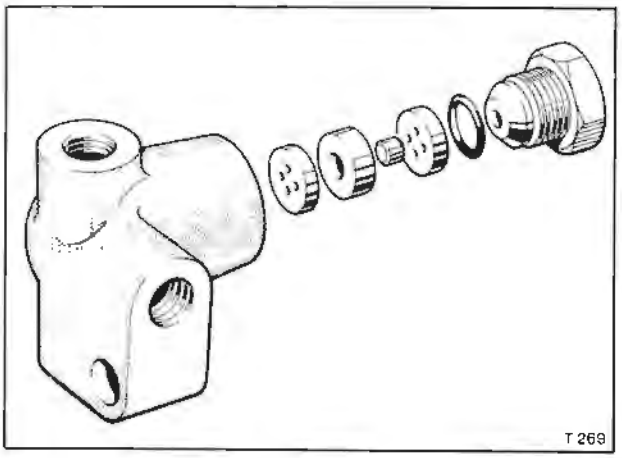

Fig. G23 Solenoid restrictor valve (high and low pressure pipe lines)

2. Ensure that the restrictor roller moves freely in the restrictor plate bore prior to fitting into the valve body.
3. Lightly smear the threads of the union plug with Molytone 'C' grease prior to fitting.
4. Torque tighten the union plug in accordance with the figure quoted in Chapter P.

Solenoid restrictor valve - To fit

Fit the solenoid restrictor valve by reversing the procedure given for removal noting the following points.

1. Torque tighten the valve securing setscrew and pipe connections in accordance with the figures quoted in Chapter P.
2. After fitting, bleed the hydraulic system as described in Section G4.

Printed in England
© Rolls-Royce Motors Limited 1978

Printed in England
© Rolls-Royce Motors Limited 1978
August 1978
P.S.D. 4200

Section G12

Height control valves

Introduction

The height control valves are situated on the outer ends of the rear suspension crossmember and are operated by pivoting links attached to each trailing arm.

Due to the valves containing fine limits and machine matched parts, only certain components are available as individual items. Service replacements for the complete assembly are available if required. Details of the available items are shown in the current parts list.

Height control valves - To remove

1. Place the car on a ramp and depressurise the hydraulic systems as described in Section G2.
2. Remove the flexible and steel pipes from the rear of the height control valve.

Note

All pipe ends, valve ports and junction block ports must have blanks fitted as they are disconnected.

3. **Left-hand height control valve.** Disconnect the two pipes entering the front of the valve at the two three-way junction connectors mounted on the rear face of the rear suspension crossmember (see Fig. G24).

Right-hand height control valve. Disconnect the two pipes entering the front of the valve at the four-way junction connector mounted on the side of the height control valve mounting bracket (see Fig. G25).

4. Slacken the lock-nut and unscrew the adjusting screw from the bottom ball joint of the valve actuation link; disengage the joint.
5. Remove the valve mounting bolts and nuts. Remove the valve, actuation rod and two pipes as a complete assembly.

Height control valves - To dismantle (see Fig. G26)

1. Correlate the position of the operating arm relative to the operating shaft to facilitate assembly. Remove the clamping bolt and operating arm from the shaft.
2. Remove the ram supply adapter complete with washer, sealing ring, nylon valve stop and return spring from the valve; discard the sealing ring.
3. Remove the inlet adapter complete with washer and sealing ring; discard the sealing ring.
4. Remove the return spring and inlet valve from the bore.
5. Remove the nuts and washers securing the halves of the valve together. Carefully separate the halves and discard the sealing rings.
6. Collect the exposed plunger return spring and withdraw the sleeve valve from its bore.

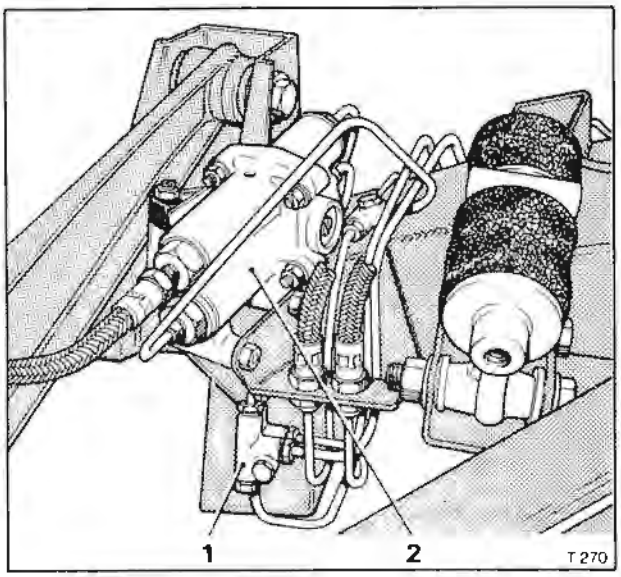

Fig. G24 Left-hand height control valve in position
1 Three-way connectors
2 Height control valve

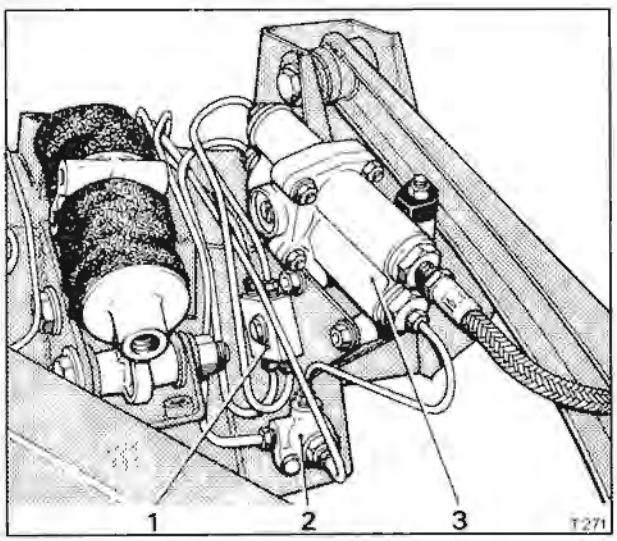

Fig. G25 Right-hand height control valve in position
1 Four-way junction connector
2 High pressure restrictor
3 Height control valve

7. Carefully remove the restrictor valve assembly from the upper bore and collect the spring seating from inside the upper bore of the housing.
8. Remove the solenoid line adapter complete with

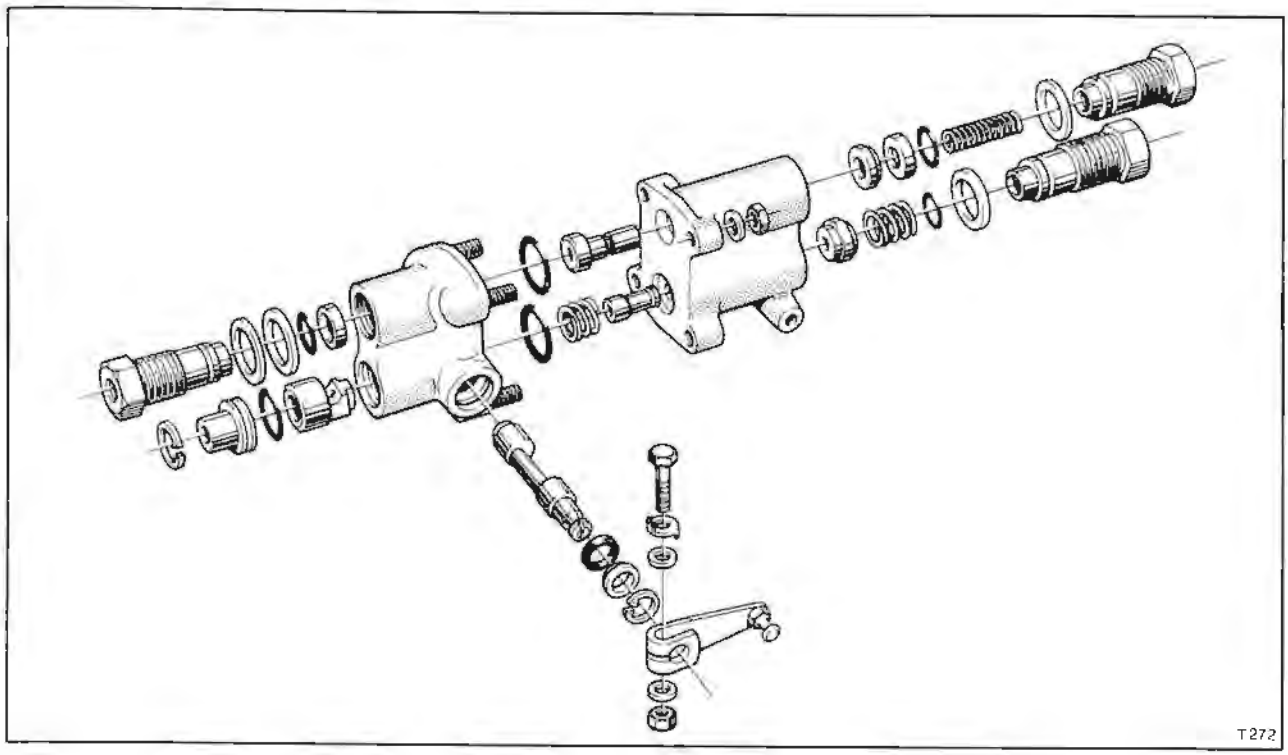

Fig. G26 Height control valve (left-hand shown)

washer, adjusting washers (when fitted) and nylon valve stop; discard the sealing ring.

9. Remove the circlip retaining the fluid return adapter; remove the adapter and discard the sealing ring.

10. Rotate the operating shaft to allow the shaft eccentric to clear the plunger groove; push the plunger out of its bore.

11. Remove the circlips retaining the operating shaft in its bore, remove the stepped washers and press out the shaft. Remove and discard the sealing rings.

12. Thoroughly clean all parts of the valve assembly with methylated spirits and dry with clean compressed air.

13. Inspect all parts for wear and damage. Ensure that the sleeve valve and restrictor valve operate smoothly in their bores without excess radial clearance. Also ensure that the end face of the sleeve valve and the adjacent valve and plunger faces are smooth and free from burrs and damage.

Height control valve - To assemble (see Fig. G27)

Ensure that all parts to be used in the assembly are scrupulously clean.

1. Insert the operating shaft into position in the housing bearing bores; smear the bearings with Molytone 'C' grease. Note that the position of the shaft determines whether the valve assembly is for use on the right-hand or left-hand side of the car.

2. Fit a seal lightly smeared with Molytone 'C' grease to one end of the operating shaft. Ease the seal into its recess using a thin blunt instrument, taking care not to cut the seal.

3. Fit a seal retaining washer over the shaft and locate it in its recess. Pushing gently on the washer, fit the circlip.

4. Fit a seal, retaining washer and circlip to the opposite end of the shaft by repeating Operations 2 and 3.

5. Lightly smear the outside bearing surface and tranverse slot of the plunger with Molytone 'C' grease. Insert the plunger into its bore ensuring that it moves freely. Allow the nose of the plunger to pass the operating shaft then rotate the shaft 180° to locate the plunger into position. Leave the plunger in this position.

6. Fit a sealing ring lubricated with brake fluid onto the fluid return adapter. Insert the adapter into the bore behind the plunger then fit the retaining circlip.

7. Fit a sealing ring lubricated with brake fluid onto the threaded adapter removed from the solenoid connection of the valve body; ensuring that the nylon valve stop is in position. Lubricate the adapter threads with Molytone 'C' grease.

8. Fit the large washer and any adjusting washers that were previously fitted onto the adapter then fit and tighten the adapter into the casing.

9. Lubricate the restrictor valve and sleeve valve with recommended brake fluid (see Chapter D), and insert them into their respective bores ensuring that they move freely.

10. Fit a sealing ring into each groove in the centre joint face of the valve casing and fit the return

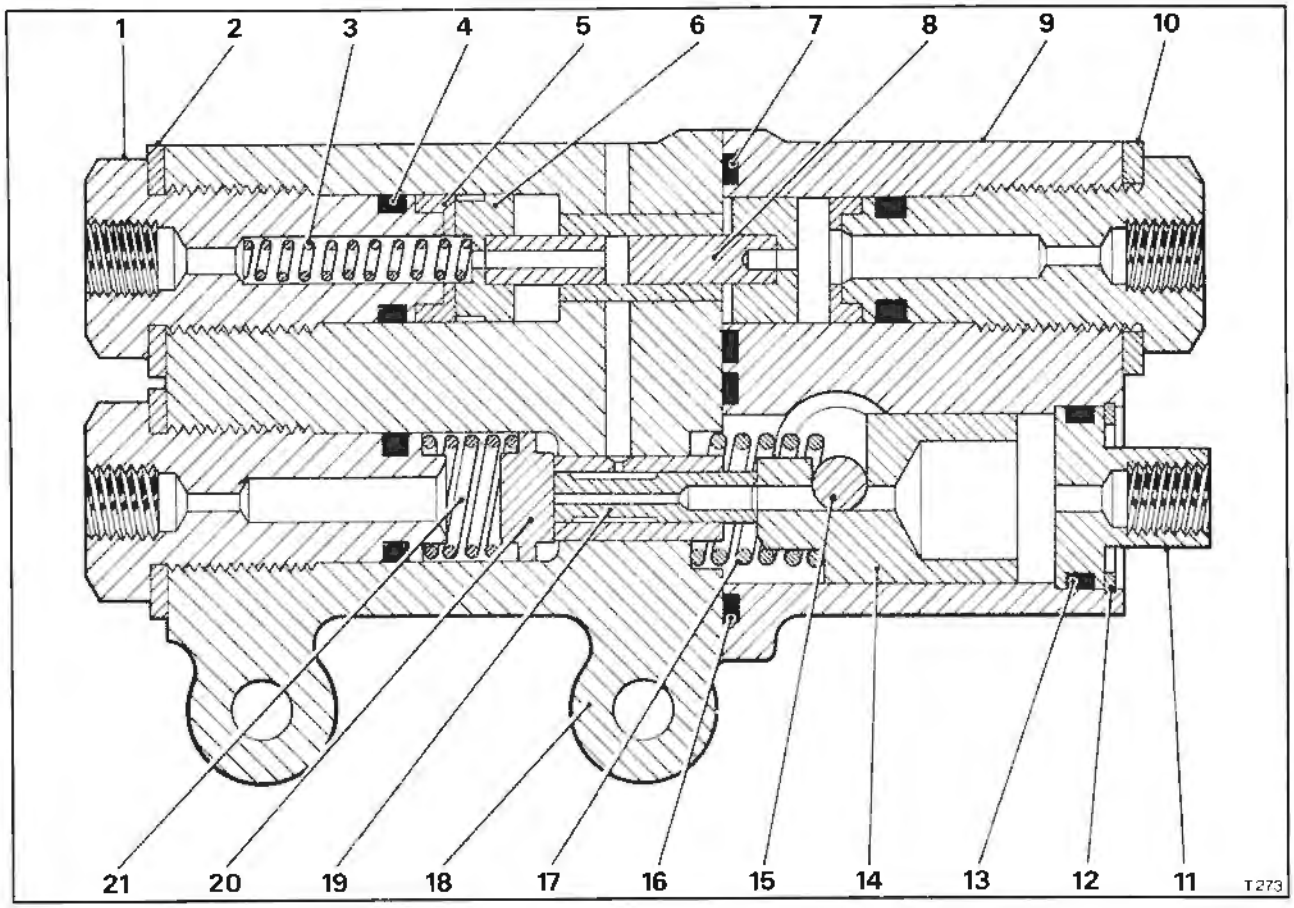

Fig. G27 Height control valve

1 Adapter (3)
2 Washer (3)
3 Return spring
4 Sealing ring (3)
5 Nylon valve stop (2)
6 Return spring seat
7 Sealing ring
8 Sleeve valve
9 Housing
10 Washer (plus adjusting washers if fitted)
11 Fluid return adapter
12 Circlip
13 Sealing ring
14 Plunger
15 Operating shaft
16 Sealing ring
17 Spring
18 Housing
19 Restrictor valve
20 Inlet valve
21 Spring

spring over the nose of the plunger.

11. Carefully secure the valve housing and casing together using the four nuts and washers.

12. Fit a sealing ring lubricated with brake fluid to the two remaining adapters then lightly smear the threads with Molytone 'C' grease. One adapter should be fitted with a nylon valve stop.

13. Carefully insert a straight length of clean 1,59 mm. (0.062 in.) diameter wire approximately 15 cm. (6 in.) long through the adapter fitted with the nylon stop. Thread the return spring onto the wire and into the adapter bore. Locate the spring seat on the wire to abut the spring.

14. Locate the large washer on the adapter then carefully locate the end of the wire in the restrictor valve bore. Slide the parts down the wire into their correct positions then screw and tighten the adapter into position in the housing and withdraw the wire.

15. Fit the nylon inlet/exhaust valve in the following manner. Rest the valve on a short length of clean aluminium bar of approximately 12,7 mm. (0.50 in.) diameter. Invert the height control valve assembly and feed the bar and valve carefully into the housing bore. Upturn the valve assembly and withdraw the bar.

16. Fit the return spring, locate the large washer on the adapter then fit and tighten the adapter into the bore.

17. Fit blanking plugs to the exposed ports of the valve to prevent the ingress of dirt.

18. Fit the operating lever onto the operating shaft; align the correlation marks made prior to removal and fit the clamping bolt. Torque tighten the bolt to the figure quoted in Chapter P.

Printed in England
© Rolls-Royce Motors Limited 1978
August 1978
T.S.D. 4200

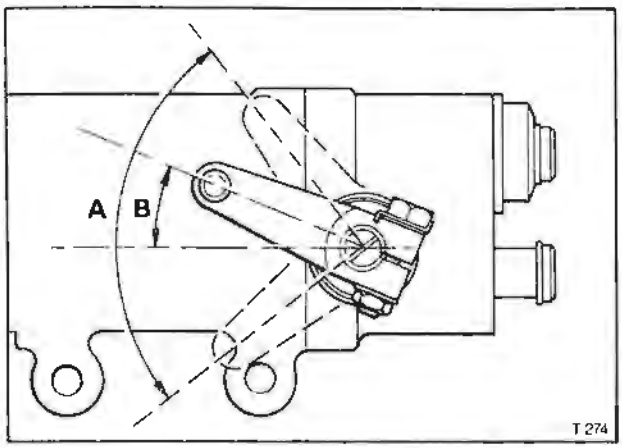

Fig. G28 Height control valve operating arm position and range

- **A** Approximate operating range without internal disengagement
- **B** 22° to 20° from horizontal position (see Operation 18 of Height control valve - To assemble.)

If the operating lever and shaft have not been correlated the correct position for the operating lever on the shaft should be determined as follows.

Fit the operating arm onto the shaft but do not tighten the clamping bolt.

Using a length of rod approximately 2,54 mm. (0.10 in.) diameter inserted through the inlet port adapter, push and retain the nylon inlet valve on its seat.

Carefully rotate the operating shaft in a clockwise direction until internal contact between the plunger and sleeve valve is felt.

Position the operating arm as shown in Figure G28 and tighten the clamp bolt.

Note

The operating shaft should only be rotated within the range shown in Figure G28. Further rotation will cause the shaft to disengage from the plunger. If disengagement occurs a thin rod should be inserted through the return port adapter and the plunger carefully pushed down the bore while the operating shaft is slowly rotated to re-engage in the plunger.

Height control valve - To fit

To fit a height control valve, reverse the procedure given for its removal, noting the following points.

1. The operating link joints must be lubricated with Rocol MTS 1000 grease or equivalent and then adjusted to give complete freedom of movement without free play.
2. All setscrews, nuts and pipe connections should be torque tightened in accordance with the figures quoted in Chapter P.
3. After fitting a height control valve, the hydraulic system must be bled as described in Section G4 and the height control valves 'set' to give the correct car levelled height.

Levelled height - To set

If the height control valves are removed from the car, on their replacement the levelled height must be checked and adjusted as necessary.

Note

Before any attempt is made to set the levelled height it is important that the car suspension height is correct. For details of the checking procedure reference should be made to Chapter H.

1. Weight the car with four occupants, or weights to a total of approximately 272 kg. (600 lb.) equally disposed between the front and rear seats. The fuel tank should contain 45 litres (10 Imp. gal. 12 US gal.) of fuel and all accessories, spare wheel and tools must be fitted in their respective locations.
2. Ensure the gearchange selector is in the 'P' Park position then remove the gearchange thermal cut-out from the fuse board.
3. Start the engine and allow the system to fully pressurise.
4. Check the levelled height by measuring the height 'A' (see Fig. G29) from the level surface on which the car stands, to the centre line of the rearmost bottom bolt which secures the forged bracket of the rear suspension crossmember to the body sill. Measure height 'B' from the level surface to the centre line of the rearmost bottom bolt which secures the rear hub assembly to the trailing arm. The difference between these two heights should be between 19,05 mm. and 25,4 mm. (0.750 in. and 1.0 in.). The maximum permissible difference in height between each side of the car being 4,76 mm. (0.187 in.).

On cars destined for USA and Canada with the exception of the Camargue a 12,50 mm. (0.50 in.) thick aluminium ring and second flexible seating washer are fitted to meet the statutory condition of car height.

In this case the difference between dimensions 'A' and 'B' should be between 3,80 mm. and 10,16 mm. (0.150 in. and 0.40 in.).

It is necessary to take two measurements at each point. Before taking the first measurement the

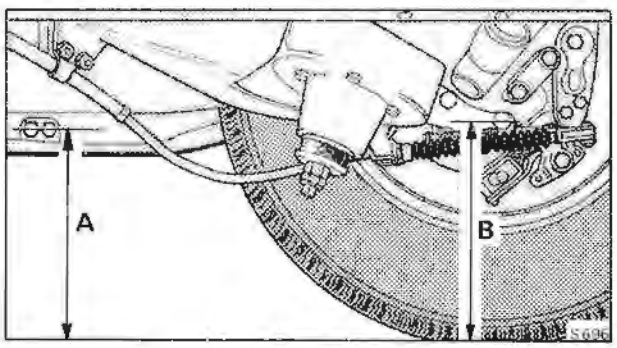

Fig. G29 Levelled height setting measurement positions

- **A** Ground to centre line of body bracket setscrew
- **B** Ground to centre line of axle yoke setscrew

car should be lifted approximately 5,08 cm. (2.0 in.) above its static position, then lowered gently and the measurements noted. The car should then be depressed approximately 5,08 mm. (2.0 in.) below its static position and allowed to rise before the second measurements are taken.

The average of the two measurements taken at points 'A' and 'B' should then be used when calculating the levelled height.

5. The levelled height is adjusted by altering the position of the control link bottom ball pivot in the elongated attachment hole on the trailing arm. Raising the ball pivot will increase the car levelled height, lowering the ball pivot will decrease the height.

It should be noted that although only one levelling valve may have been disconnected, both sides of the car must be checked for correct levelled height setting, as alteration to one side will affect the other.

Height control valves - To test (on the car)

The height control valves can be isolated and checked for operation on the car as follows.

1. Depressurise the hydraulic systems as described in Section G2 and isolate the gear-change by removing the thermal cut-out.

2. Remove the feed pipe (orange line) from one of the height control valves at the three-way junction on the rear crossmember and blank off the pipe end. Fit a blank capable of withstanding full hydraulic pressure to the three-way junction.

3. Start and run the engine at approximately 1000 r.p.m. If the height control valve on the opposite side of the car to the isolated valve was not operating before but now operates correctly then the isolated valve or its associated height control ram is faulty.

4. Stop the engine, depressurise the systems and reconnect the height control valve feed.

5. A further check can be made by removing the height control valve return pipe (white line) from the junction on the rear suspension crossmember. Blank off the junction and insert the end of the pipe into a clean container.

6. Disconnect the height control valve operating arm and link from its pivot on the suspension then push the operating arm upwards. Run the engine at approximately 1000 r.p.m.

Fluid should not flow from the pipe, if it does, the height control valve is faulty and should be overhauled or renewed.

7. Pull the control lever down so as to lower the car levelled height.

Fluid contained in the ram(s) should now flow into the container and then stop when the ram(s) are completely exhausted. If the flow does not stop then the height control valve has a faulty valve seat.

8. If the valve is working correctly, depressurise the systems and reconnect the height control valve return pipe.

Printed in England
© Rolls-Royce Motors Limited 1978
August 1978
T.S.D. 4200

Printed in England
© Rolls-Royce Motors Limited 1978
August 1978
T.S.D. 4200

Section G13

Height control rams

Introduction

The height control rams are situated above each rear road spring. With the exception of Corniche Convertible cars access to the rams is through the luggage compartment of the car.

On Corniche Convertible cars the rams are removed down the road spring aperture, necessitating the removal of the rear road spring.

Height control ram - To remove
Silver Shadow II, Bentley T2, Silver Wraith II, Corniche Saloon and Camargue

1. Depressurise the hydraulic systems as described in Section G2.
2. Attach bleed tubes to the height control ram bleed screws; open the bleed screws and allow any remaining fluid to drain into a clean container.
3. **Cars destined for countries other than U.S.A. and Canada**
Remove the trim from the forward panel and corners of the luggage compartment.
Cars destined for U.S.A. and Canada
Remove the screws retaining the sealing panel at the forward end of the luggage compartment. Remove the panel to expose the fuel tank.
Remove the fuel tank as described in Chapter K.
4. Disconnect the hydraulic pipes from the top of the ram body and blank off each pipe and port.
5. Unscrew the three ram retaining setscrews equal amounts to allow the road spring connector tube to lift under road spring pressure until it abuts the underside of the spring pot. When this is achieved, remove the setscrews completely.
6. Ease the ram housing upwards to gain access to the ram piston slots, then using the hook wrench (RH 8051) unscrew the ram piston from the connector tube. Remove the ram from the car.

Height control ram - To remove
Convertible cars

1. Depressurise the hydraulic systems as described in Section G2.
2. Attach bleed tubes to the height control ram bleed screws; open the bleed screws and allow any remaining fluid to drain into a clean container.
3. Remove the rear seat cushions, backrest and trims to expose the ram securing setscrews on the base of the hood stowage compartment (see Chapter S).
4. Using special peg spanner and extension bar (RH 8048) inserted through the centre of the road-spring unlock, but do not unscrew fully the ram piston from the connector tube.

Note
When unlocking the ram piston from the connector tube the spanner must be turned clockwise.

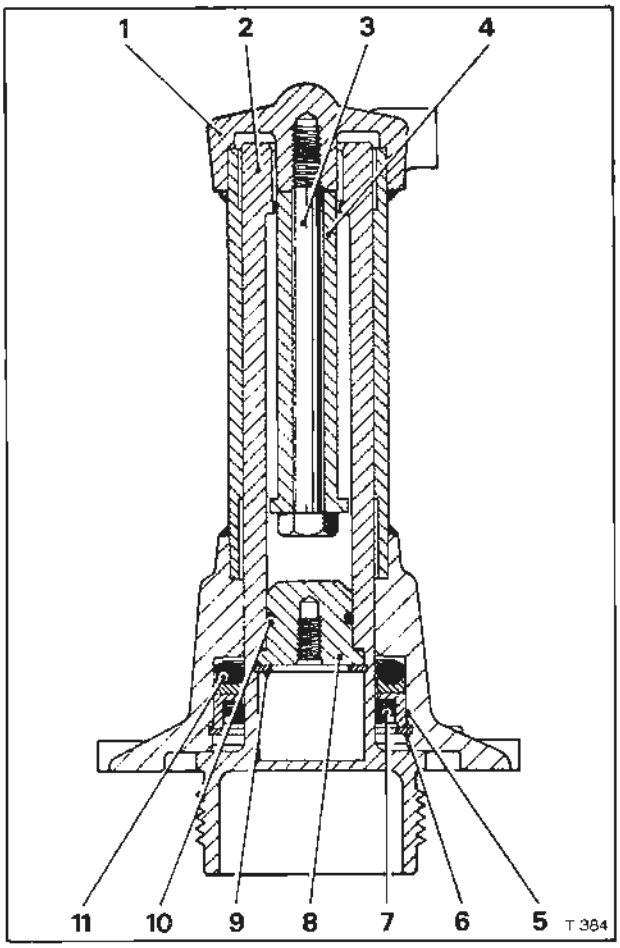

Fig. G30 Height control ram
Silver Shadow II, Bentley T2, Silver Wraith II, Corniche Saloon and Camargue

1 Housing
2 Piston
3 Travel limiting stop setscrew
4 Travel limiting stop
5 Seal housing
6 Circlip
7 Wiper seal
8 Sealing plug
9 Circlip
10 Sealing ring
11 Main seal

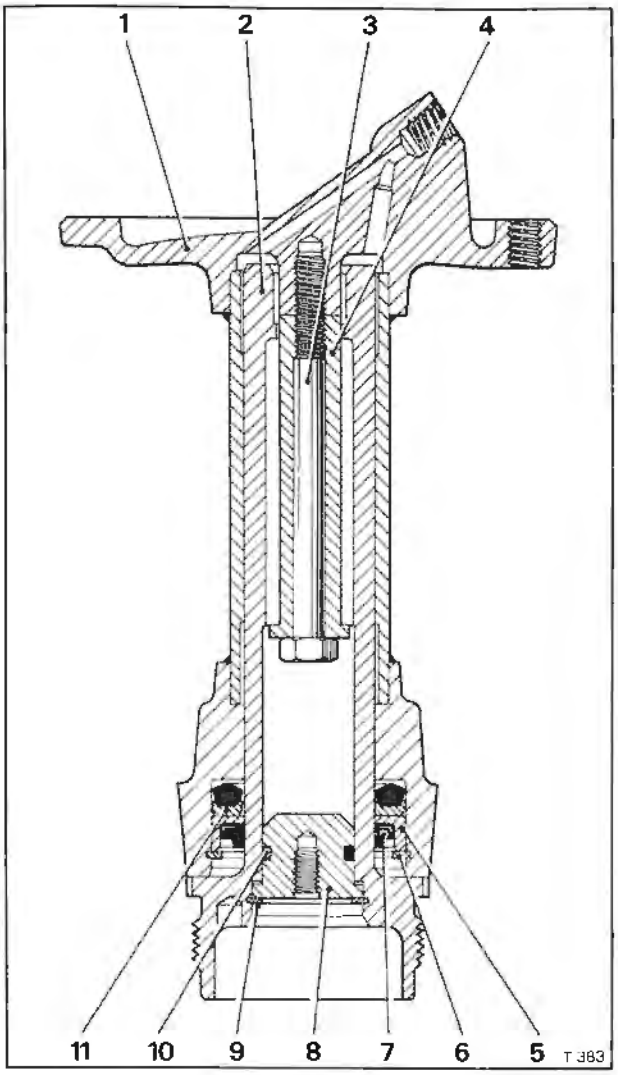

Fig. G31 Height control ram
Convertible cars

1 Housing
2 Piston
3 Travel limiting stop setscrew
4 Travel limiting stop
5 Seal housing
6 Circlip
7 Wiper seal
8 Sealing plug
9 Circlip
10 Sealing ring
11 Main seal

An alternative method is to proceed with Operation 5 onwards and separate the ram piston and connector tube on the workbench.

5. Remove the ram securing setscrews from the base of the hood stowage compartment.

6. Remove the road spring, connector tube and ram assembly from the car as described in Chapter H.

7. Separate the ram assembly from the connector tube by unscrewing the ram piston from the connector tube.

Height control ram - To dismantle (see Figs. G30 and G31)

1. Remove the circlip retaining the sealing plug in the piston bore.

2. Withdraw the sealing plug from the piston bore. Discard the sealing ring.

A 0.250 in. UNF threaded hole is provided in the end of the plug to facilitate removal.

3. Using a suitable spanner unscrew the travel limiting stop setscrew. Withdraw the ram piston from the housing and collect the travel limiting stop and setscrew.

4. Remove the seal retaining circlip from the ram housing then extract the wiper seal, seal housing and main seal.

5. Thoroughly clean and inspect all items for wear and damage. Any score marks should be removed from the piston by use of a fine grade emery cloth prior to final cleaning.

Height control ram - To assemble

1. Lubricate a new main seal with recommended brake fluid (see Chapter D) and insert it into position in the ram housing as shown in Figure G32.

2. Lubricate a new wiper seal with brake fluid and gently push it into place in the seal housing.

3. Insert the wiper seal and housing into position in the ram housing. Ensure that the flat face of the housing abuts the main seal. Fit the seal retaining circlip.

4. Slide the piston into the ram housing taking care not to damage the seal lips.

5. Fit the setscrew and travel limiting stop and torque tighten the setscrew to the figure quoted in Chapter P.

6. Smear the new piston blanking plug seal with Molytone 'C' grease or equivalent and fit it onto the plug.

7. Press the blanking plug into position in the ram piston and fit the retaining circlip.

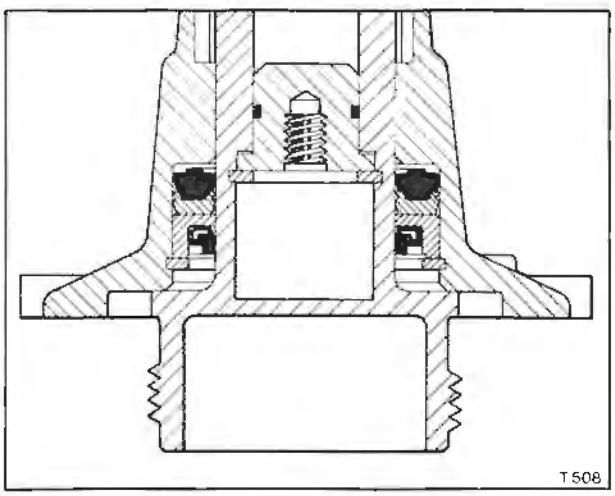

Fig. G32 Height control ram seals

Height control ram - To fit
Fit the height control ram by reversing the procedure for removal noting the following points.
1. All nuts and setscrews should be torque tightened in accordance with the figures quoted in Chapter P.
2. After fitting the height control ram, bleed the height control system as described in Section G4.
3. Check the ram and all the disturbed pipe connections for leaks prior to fitting the body trims.

Height control ram - To test (on the car)
The only likely failures on a height control ram are seal failures. If a ram piston blanking plug seal or main piston seal fail this will be visually evident as hydraulic fluid will be seen running down the damper casing or road spring.

Printed in England
© Rolls-Royce Motors Limited 1978
August 1978
T.S.D. 4200

Section G14

Pressure switches

Introduction

The accumulator pressure switches are situated in the engine compartment on the right-hand longeron (No. 1 system accumulator) and the left-hand longeron (No. 2 system accumulator).

The pressure switches are operated by the pressurised fluid in the hydraulic systems and will illuminate the warning panel(s) situated on the interior facia if the pressure in the hydraulic system(s) falls below a safe working pressure. It is important therefore that the warning panel lamps are not operated due to a faulty switch.

In the event of a pressure switch failure the pressure switch should be renewed.

Pressure switch - To test

1. The hydraulic pressure switches are designed to 'fail safe' i.e. if a pressure switch fails it will operate the facia panel warning lamps.

2. The warning lamp bulbs can be checked for correct operation by moving the gear range selector lever to the 'D' drive position and turning the ignition key against the spring pressure to the 'start' position. This operation should result in all of the panels in the warning cluster situated on the facia being illuminated.

Important

Ensure that both the parking brake and foot brake are firmly applied when carrying out this operation.

3. The easiest method of testing a hydraulic pressure switch is by substitution. If this is not possible the following procedure should be carried out.

4. Depressurise the hydraulic systems as described in Section G2.

5. Remove the bleed screw from the three-way adapter on the left-hand pressure switch and connect a zero kg/sq.cm. to 210 kg/sq.cm. (zero lb/sq.in. to 3 000 lb/sq.in.) pressure gauge fitted with a connecting pipe and bleed screw into the adapter.

6. Connect a battery and test lamp in series to the pressure switch as shown in Figure G34. The test lamp should illuminate, confirming that the switch contacts are made, denoting no brake fluid pressure.

7. Start and run the engine at approximately 800 r.p.m. and observe the pressure gauge. The test lamp should extinguish at a pressure not exceeding 45,70 kg/sq.cm. (650 lb/sq.in.). Switch off the ignition and using a bleed tube attached to the gauge feed pipe bleed screw slowly bleed off the fluid into a clean container thus allowing the hydraulic pressure to fall. Observe the pressure at which the test lamp illuminates, this pressure should not be less than 17,58 kg/sq.cm. (250 lb/sq.in.).

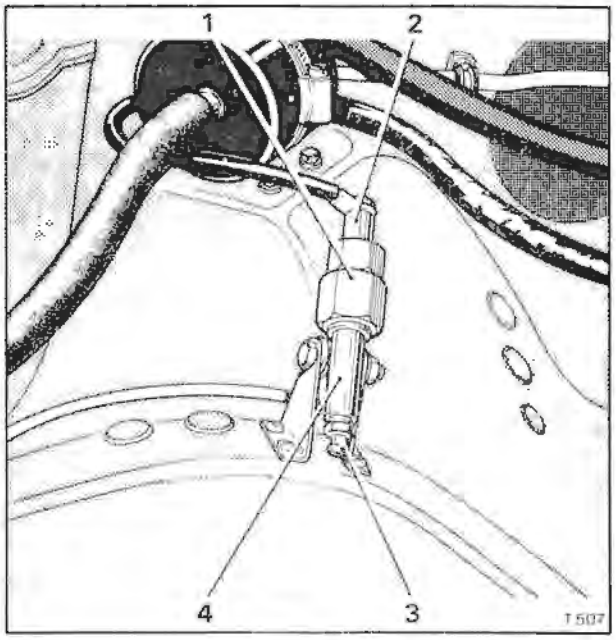

Fig. G33 Pressure switch (left-hand longeron)
1 Pressure switch
2 Electrical connection
3 Bleed screw
4 Three-way adapter

Note

On cars destined for use in Australia, Canada and the U.S.A. higher rated pressure switches are fitted. The operating pressures for these switches are as follows:

84,39 kg/sq.cm. (1 200 lb/sq.in.) test lamp extinguished.

63,28 kg/sq.cm. (900 lb/sq.in.) test lamp illuminated.

8. In order to test the pressure switch fitted to the right-hand longeron (No. 1 system) the pressure switch should be exchanged with the left-hand (No. 2 system) pressure switch and Operations 5 to 7 inclusive repeated.

9. When tests and rectifications have been completed the systems must be bled as described in Section G4.

Pressure switch - To renew

1. Depressurise the hydraulic systems as described in Section G2.

Printed in England
© Rolls-Royce Motors Limited 1978
August 1978
T.S.D. 4200

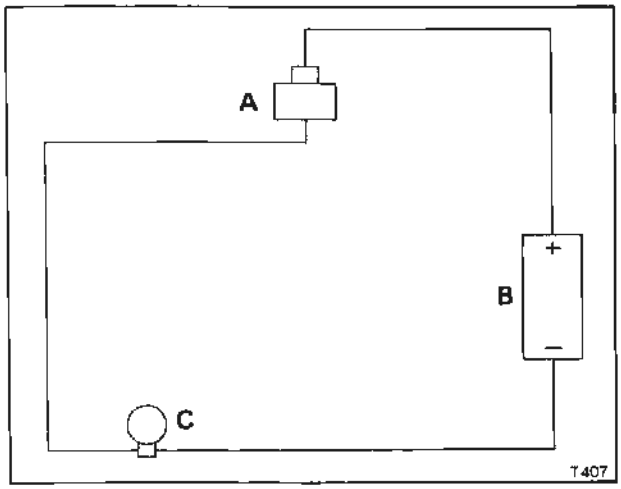

Fig. G34 Pressure switch test circuit
A Pressure switch
B Battery
C Test lamp

2. Disconnect the electrical connection from the top of the pressure switch. Unscrew the pressure switch from the three-way adapter; discard the two aluminium sealing washers.
3. Screw a new pressure switch into the three-way adapter, fitting a new sealing washer to each side of the distance washer on the switch connection. Torque tighten the switch to the figure quoted in Chapter P.
4. Fit the electrical connection to the pressure switch contact pin.
5. When fitting is completed bleed the hydraulic system as described in Section G4.

Section G15

Front and rear disc brakes

Introduction

Disc brakes are fitted to all four wheels; each front wheel being fitted with two twin cylinder calipers and each rear wheel with a large four cylinder caliper.

The calipers are divided between the two hydraulic systems, providing an integrated braking system in which each system can operate independently in the event of system failure.

Bleed screws are fitted to the inner faces of each caliper to facilitate bleeding of the two systems.

The rear brake calipers have the mechanically operated parking brake pads situated beneath them. On application of the parking brake the wedge shaped brake pads act on each side of the rear brake disc (refer to Section G16 for details).

Inspection of all brake pads must be carried out at the specified service intervals; for details reference should be made to the Service Schedule Manual publication number T.S.D. 4117.

In order to obtain maximum efficiency and safety from the braking systems it is important that only replacement disc pads of approved design and material specification are fitted.

It is important when changing brake pads that the friction material of the new pads is of the same type and grade as that fitted to the other brake calipers; otherwise it will be necessary to renew all the brake pads.

Brake pads of different specification or different manufacturers vary in their friction, wear and operating characteristics and if mixed could have an adverse effect on braking performance.

The brake pads must be renewed when the brake pad linings are worn to within 3,18 mm. (0.125 in.) of the back plate.

After fitting new brake pads an initial running-in period of between 1100 kilometres and 1300 kilometres (700 miles and 800 miles) should be observed.

During this initial running-in period, the brakes should not be applied harshly or for prolonged periods from high speeds except in an emergency. The force with which the brakes are applied may be progressively increased towards the end of the running-in period.

Note

If the brakes are to be relined with pads which have different recommended linings from those previously fitted the disc faces should be cleaned prior to fitting the new pads. All traces of the old pad material should be removed by hand rotating the disc whilst applying fine emery cloth to the disc faces. Do not emery the disc radially. **It is again stressed that the same type and grade of pad linings must be fitted to all six brake calipers.**

Front wheel brake pads - To renew

1. Depressurise the hydraulic system as described in Section G2.

Note

This operation is not essential for brake pad renewal but is recommended as a safety precaution in the event of the brake pedal being accidentally depressed whilst the brake pads are removed.

2. Slacken but do not remove the front road wheel retaining nuts.
3. Securely chock the rear road wheels, then jack up the front of the car. Support the car with stands and sill blocks.
4. Remove the front road wheels.
5. Remove the spring clips from the two brake pad retaining pins (see Fig. G35) and withdraw the pins.
6. Using extractor tool (RH 8928) withdraw the brake pads from the caliper.
7. Prior to fitting the new brake pads, inspect the caliper piston dust seals for signs of damage or heat hardening and renew as necessary.
8. Carefully press the caliper pistons back into their bores, taking care not to damage or trap the piston seals. Ensure that the seal retaining clips are correctly located.
9. Fit the new pads by reversing the removal procedure, ensuring that the spring clips are correctly located in the pad retaining pins.

On later cars a 'M' shaped anti-rattle spring is fitted onto the brake pad retaining pin, on the leading side of the caliper pad i.e. upper pin on the front wheel, front brake caliper and lower pin on the front wheel, rear brake caliper (see Fig. G36). One spring only is fitted to each brake caliper.

The brake pads differ from those fitted to the earlier type of brake caliper in that an additional hole is incorporated to accommodate the 'M' spring.

Always ensure that the 'M' spring is fitted correctly as follows.

1. Fit the brake pads into the caliper and insert the trailing, pad retaining pin. Secure the pin with the retaining clip.
2. Locate the ends of the 'M' spring into the central holes of the brake pad back plate.

Printed in England

© Rolls-Royce Motors Limited 1978

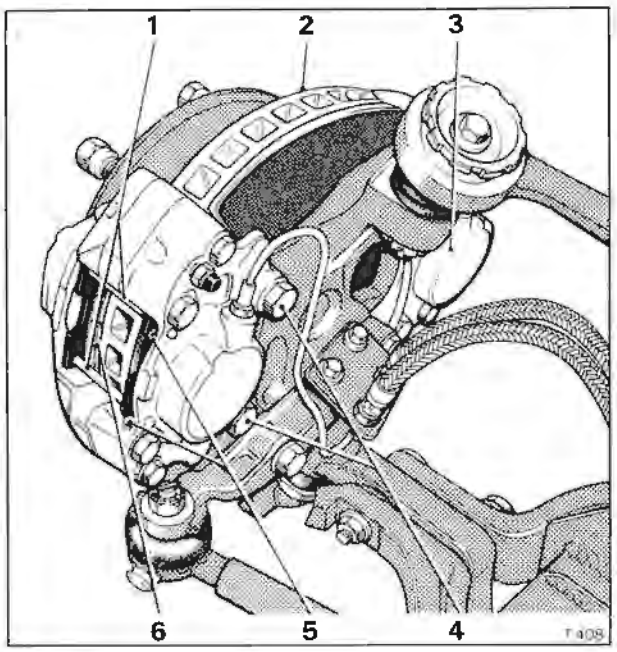

Fig. G35 Front wheel brake calipers
1 Brake pad retaining pins
2 Brake disc
3 Rear caliper
4 Caliper retaining bolts
5 Spring clips
6 Brake pad

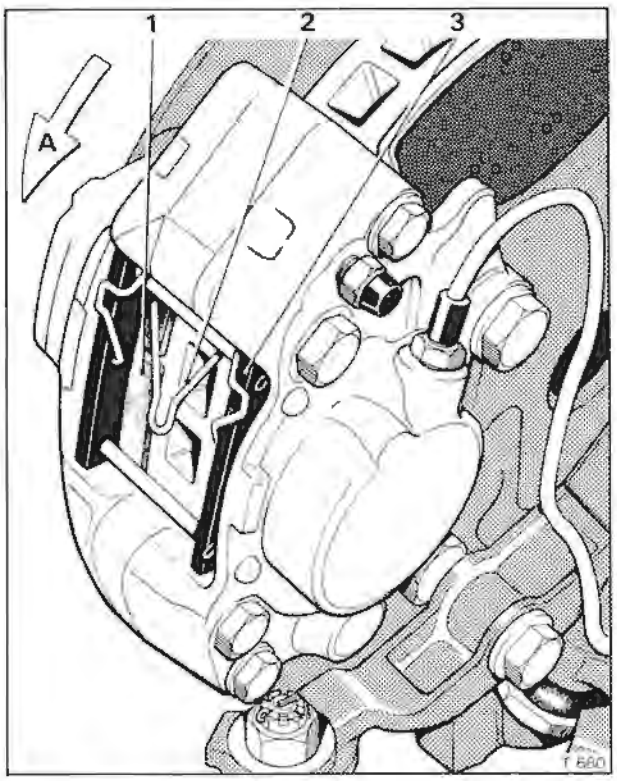

Fig. G36 Front wheel brake caliper 'M' spring type
1 Brake pad
2 'M' spring
3 Brake pad backing plate
A Direction of forward rotation of brake disc

3. Ease the spring into position and secure with the leading pad retaining pin. Fit the pin retaining clip.
4. Ensure that the centre of the 'M' spring points in the same direction as the forward rotation of the brake disc.

Note
When fitting the 'M' spring the 'ears' of the spring must rest on the edge of the brake pad backing plate, with the bends at the top of the 'M' figuration butting against the caliper body.

Do not compress the two bends of the spring more than the normal gap between the two brake pads otherwise the spring may become permanently set.

Due to inherent distortion during pad wear new 'M' springs must be fitted whenever replacement brake pads are fitted.

Rear wheel brake pads - To renew
1. Depressurise the hydraulic system as described in Section G2.

Note
This operation is not essential for brake pad renewal but is recommended as a safety precaution in the event of the brake pedal being accidentally depressed whilst the brake pads are removed.

2. Securely chock the front road wheels, then jack up the rear of the car as necessary. Support the car with stands and sill blocks.
3. Remove the rear road wheels.
4. Remove the spring clips from the two brake pad retaining pins (see Fig. G38) and withdraw the pins. Collect the anti-rattle spring clip from the rear of each brake pad.
5. Withdraw the brake pads from the caliper using the extractor tool (RH 8929).
6. Prior to fitting the new pads, inspect the caliper piston dust seals for signs of damage or heat hardening and renew as necessary.
7. Carefully press the caliper pistons back into their bores, taking care not to damage or trap the seal. Ensure that the seal retaining clips are correctly located.
8. Fit the new pads by reversing the removal procedure, ensuring that the anti-rattle spring clips and pad retaining pin clips are correctly located (see Fig. G38).

Front brake caliper - To remove (refer to Fig. G35)
1. Depressurise the hydraulic systems as described in Section G2.
2. Securely chock the rear road wheels.
3. Remove the wheel disc, (see Section R1) then slacken but do not remove the wheel retaining nuts.
4. Raise the front of the car on a hydraulic jack. Securely support the car on stands and sill blocks.
5. Remove the road wheel.
6. Disconnect the caliper feed pipe and blank off the pipe end and caliper port against the ingress of dirt.

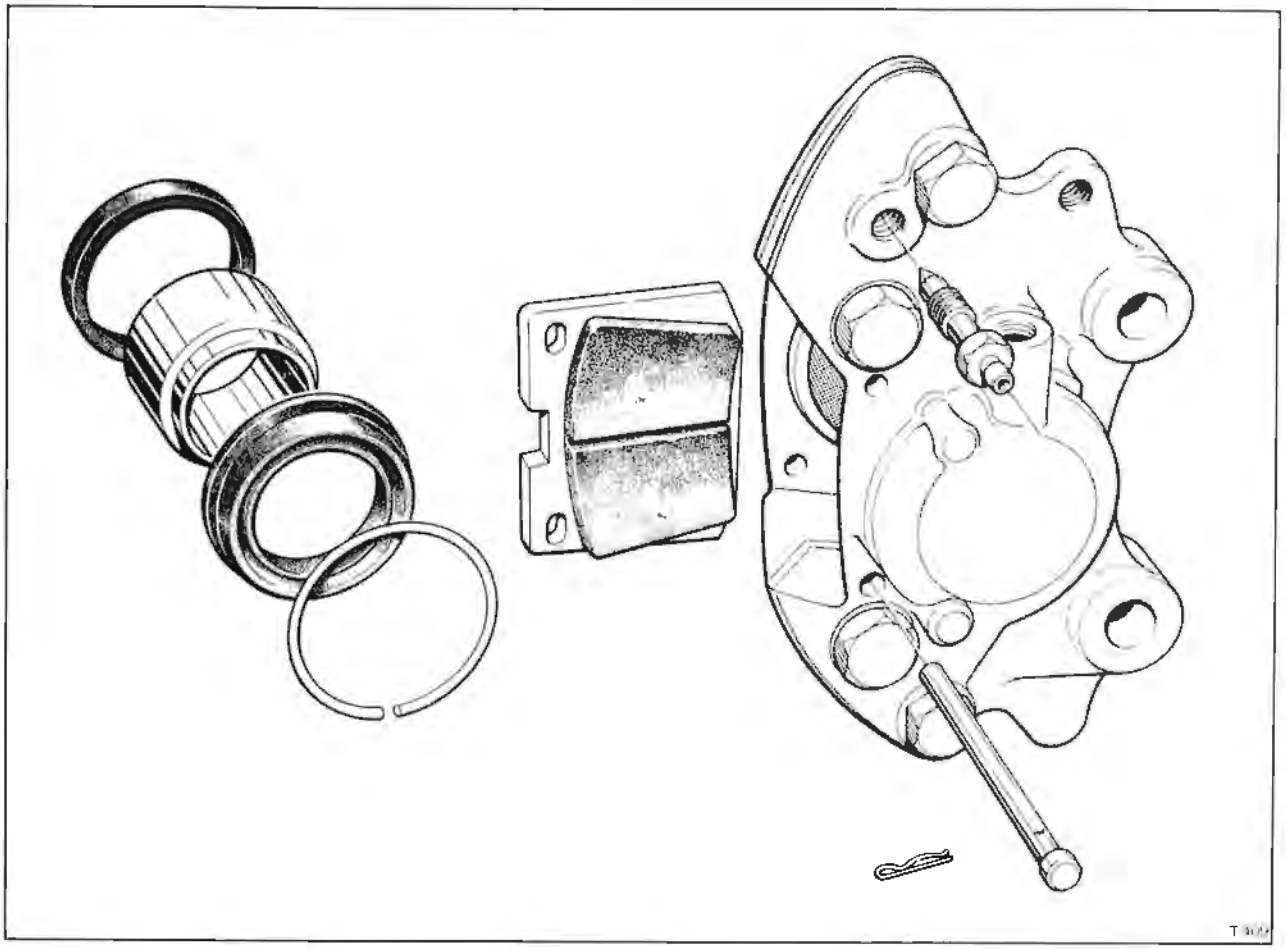

Fig. G37 Front wheel brake caliper

7. Remove the fitted bolts which secure the caliper to the axle yoke. Remove the caliper from the car.
8. It is recommended that a distance piece is fitted between the caliper pads after removal to prevent the pistons from easing out of their bores.

Rear brake caliper - To remove (refer to Fig. G38)
1. Depressurise the hydraulic systems as described in Section G2.
2. Securely chock the front wheels of the car.
3. Remove the wheel disc (see Section R1) then slacken but do not remove the wheel retaining nuts.
4. Raise the rear of the car on a hydraulic jack. Securely support the car on stands and sill blocks. Do not allow the full load of the suspension to hang on the rebound straps.
5. Remove the road wheel.
6. Disconnect the two caliper feed pipes from the caliper and blank off the pipe ends and caliper ports against the ingress of dirt.
7. Remove the split pin and clevis pin from the twin links on the parking brake caliper linkage. Collect the waved anti-rattle washer.
8. Remove the fitted bolts securing the caliper to the hub yoke. Remove the caliper from the car.
9. Fit a distance piece between the caliper pads to prevent the pistons easing out of their bores.

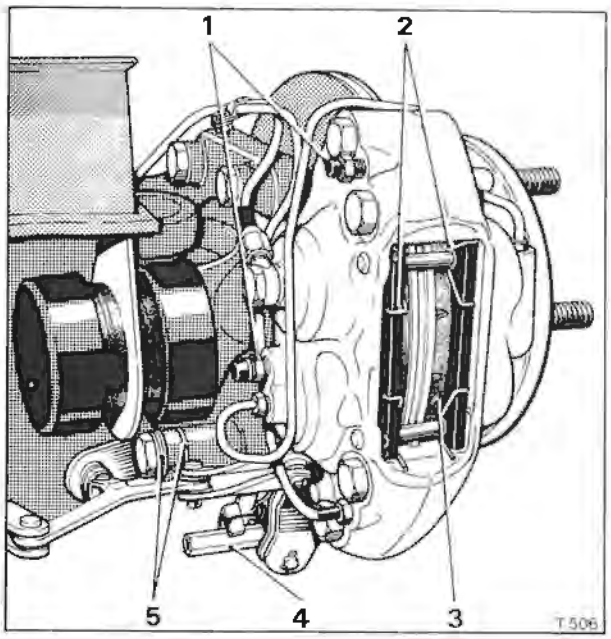

Fig. G38 Rear wheel brake caliper
1 Bleed screws
2 Anti-rattle spring clips
3 Brake pad
4 Parking brake adjuster
5 Parking brake lever adjustment washers

Printed in England
© Rolls-Royce Motors Limited 1978
December 1978
T.S.D. 4200

Brake caliper piston seals - To renew

The brake caliper seals should be renewed at the intervals specified in the Service Schedule Manual publication number T.S.D. 4117.

1. Depressurise the hydraulic systems as described in Section G2.
2. Remove the brake caliper from the car and remove the brake pads as described previously.
3. Remove the spring clip retaining the caliper piston dust seal; remove the dust seal.
4. Ease the piston from its bore taking care not to damage the piston.
5. Remove the piston seal from the caliper bore.
6. Clean the caliper bore and piston with methylated spirits and dry thoroughly using dry compressed air.
7. Immerse the new piston seal in approved brake fluid (refer to Chapter D), then carefully insert it into the groove in the caliper bore, ensuring it is correctly seated.
8. Lubricate the piston outside diameter with a small quantity of approved brake fluid, then carefully fit the piston.
9. Fit a new dust seal around the piston top and over the caliper bore flange. Fit the spring ring taking care not to 'pinch' the seal with the ends of the ring.

Brake calipers - To fit

Fit the brake calipers by reversing the respective removal procedure noting the following points.

1. All setscrews and pipe connections must be torque tightened in accordance with the figures quoted in Chapter P.
2. Ensure that a minimum clearance of 8,00 mm. (0.312 in.) is maintained between the caliper bridge pipe and the brake disc when fitting rear brake calipers.
3. When fitting is completed bleed the hydraulic systems as described in Section G4.

Note

The supply pipe connection ports on the front wheel brake calipers are a metric threaded fitting and only pipes fitted with the correct metric pipe nuts should be used.

Brake disc - To remove

1. Depressurise the hydraulic systems as

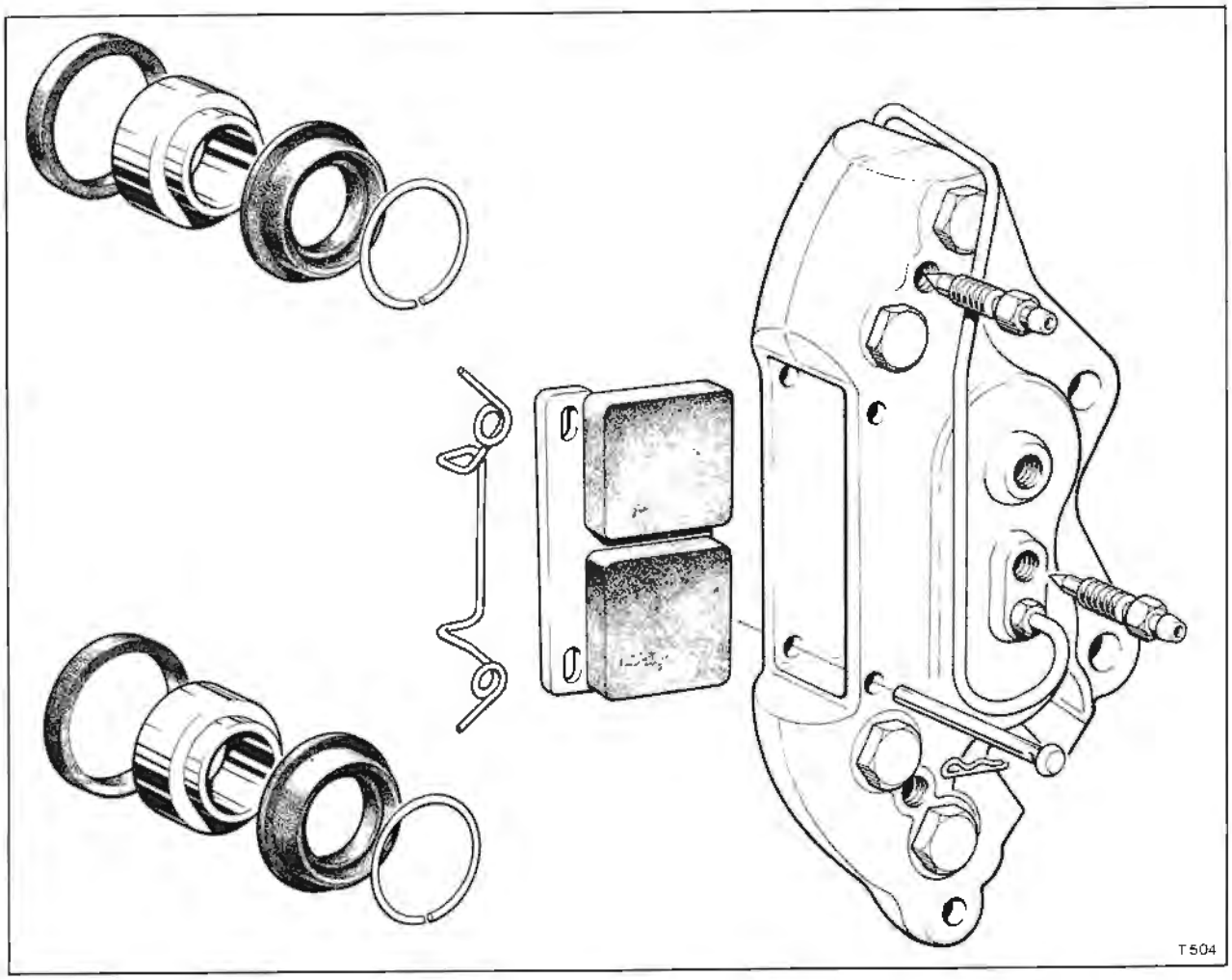

Fig. G39 Rear wheel brake caliper

described in Section G2.
2. Remove the front or rear hub as necessary, following the procedure described in Chapter J Rear hubs or Chapter H Front hubs.
3. To remove a front brake disc remove the set-screws securing the disc to the hub.
4. To remove a rear brake disc dismantle the rear hub as described in Chapter J then unscrew the disc retaining setscrews.

Brake disc - To fit
Fit the brake disc by reversing the procedure for removal noting the following points.
1. All setscrews must be torque tightened in accordance with the figures quoted in Chapter P.
2. The hubs must be assembled and fitted as described in their respective Chapter H or J.
3. On completion the hydraulic systems must be bled as described in Section G4.

Note
New brake discs are treated with a protective film. When a new disc has been fitted the brakes should be gently applied until the protective film has been removed from the working surface of the disc by the first few brake applications.

If only one front brake disc has been replaced the car will gently pull to the side opposite the new disc until the protective film has been removed.

Printed in England
© Rolls-Royce Motors Limited 1978
December 1978
T.S.D. 4200

Section G16

Parking brake linkage

Introduction

The parking brake is operated by a hand pulled mechanism on right-hand drive cars and by a foot pedal application with a hand pull release on left-hand drive cars. Both types of mechanism operate a caliper lever arrangement fitted beneath the two rear hydraulic brake calipers. These levers apply a wedge shaped friction pad to each side of the brake disc.

The parking brake pads should be manually adjusted at the intervals specified in the Service Schedule Manual publication T.S.D. 4117.

Hand operated ratchet assembly - To remove
Right-hand drive cars

1. Place the car on a ramp and securely chock the road wheels. Release the parking brake to the 'off' position.
2. At the intermediate linkage on the underside of the body, unhook the parking brake return spring from the operating lever. Remove the clevis pin attaching the front parking brake cable to the end of the lever (see Fig. G40).
3. Remove the trim retaining screw from the centre panel of the parking brake handle aperture.
4. Remove the Lucar connectors from the micro-switch mounted on the lower end of the ratchet assembly cover tube.
5. Remove the setscrews securing the upper support bracket to the facia structure.
6. Remove the setscrew securing the lower support bracket.
7. Ease the complete ratchet assembly downwards, from beneath the facia.
8. Draw the ratchet assembly away from the toeboard and disconnect the cable from the retaining piece bolted to the bottom of the operating rod; remove the assembly.

Hand operated ratchet assembly - To dismantle

1. Remove the ratchet assembly from the car as described previously.
2. Remove the cable retainer from the lower end of the operating rod. Refit the screw into the operating rod to retain the coil spring and end fittings.
3. Remove the cheese headed screw and washer from behind the cover tube locking nut.
4. Unscrew the locking nut from behind the upper support bracket.
5. Withdraw the operating rod and roller assembly from the cover tube.

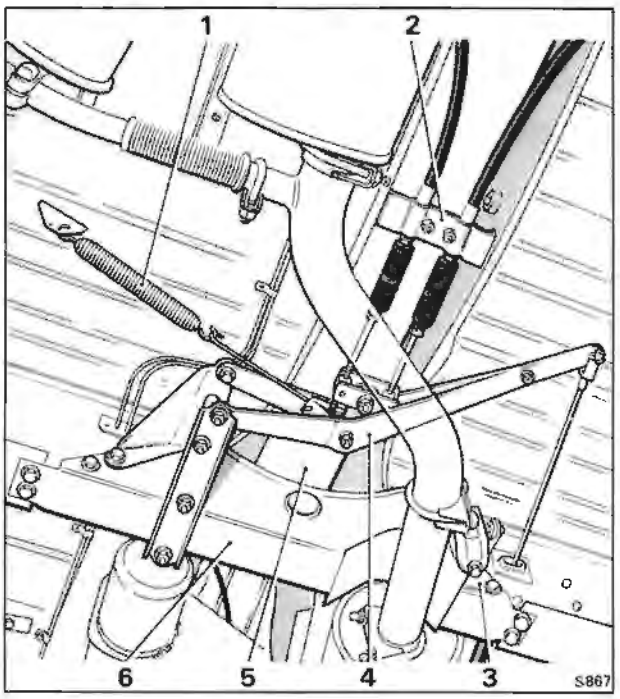

Fig. G40 Parking brake intermediate linkage (Right-hand drive cars)
1 Return spring
2 Abutment bracket-rear brake cables
3 Exhaust mount
4 Operating lever
5 Propeller shaft
6 Centre body member

Note
The roller assembly can be extracted from the cover tube by pulling the assembly to the top of the tube then tilting the tube and carefully manipulating first one roller then the other roller out of the slots.

6. Remove the retaining screw from the lower end of the operating rod. Slide the coil spring, stop plate, roller assembly and distance piece off the operating rod.
7. Remove the operating rod from the upper housing and separate the housing and ratchet components.
8. All the components should be inspected for signs of wear and damage, paying particular attention to the bushes, ratchet assembly and springs. New parts should be fitted as necessary.

Hand operated ratchet assembly - To assemble

Assemble the ratchet assembly by reversing the

Printed in England
© Rolls-Royce Motors Limited 1978

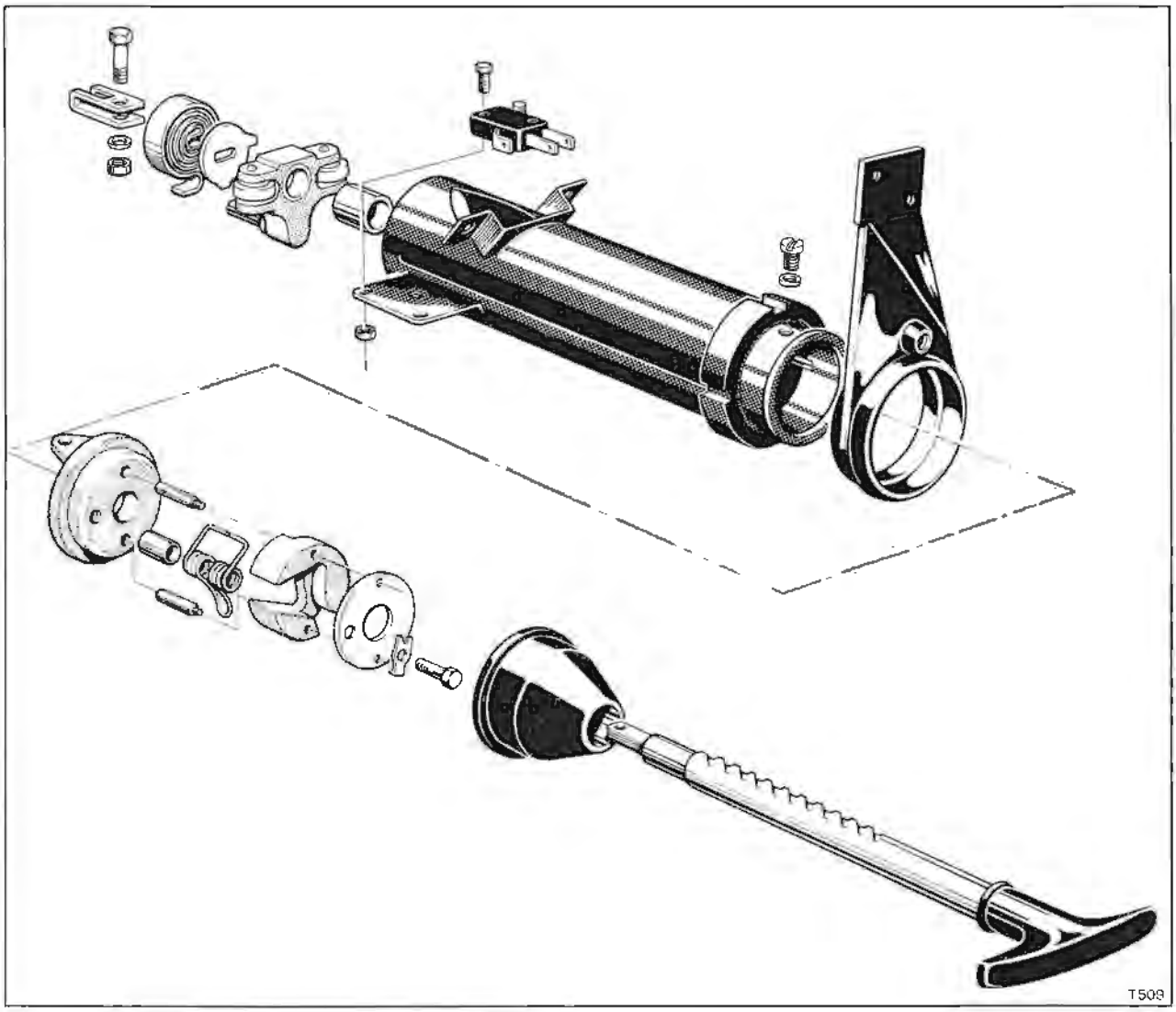

Fig. G41 Parking brake ratchet assembly (Right-hand drive cars)

procedure given for dismantling noting the following points.

1. The hand operating rod is spring loaded and must turn in a clockwise direction from the horizontal position to release the ratchet mechanism. For correct operation ensure that the coil spring and stop plate fitted below the roller assembly are as shown in Figure G41.
2. Lightly lubricate the ratchet pawls and roller mechanism using Retinax 'A' grease or equivalent.
3. Care must be taken when entering the rollers and operating rod into the cover tube slots. The tube should be held at an angle to the control rod. Enter one roller into the tube, then carefully manipulate the other roller into position.
4. The cable retainer should be fitted after the control rod and roller assembly has been fitted into the cover tube.
5. Adjust the micro-switch so that on the initial movement of the parking brake the facia warning panel marked PARKING BRAKE illuminates.

Hand operated ratchet assembly - To fit

Fit the ratchet assembly by reversing the procedure given for removal noting the following points.

1. All setscrews should be torque tightened in accordance with the figures quoted in Chapter P.
2. Care should be taken to ensure the brake cable end is located correctly in the connector link.
3. Ensure that the brake cable is correctly positioned in the guide pulleys.
4. Check the operation of the mechanism to ensure free movement of the ratchet assembly and brake cable.

Foot operated parking brake mechanism - To remove
Left-hand drive cars

1. Place the car on a ramp and securely chock the road wheels. Release the parking brake to the 'off' position.
2. At the intermediate linkage on the underside of the body, unhook the parking brake return spring

from the operating lever. Remove the clevis pin attaching the front brake cable to the lever (see Fig. G42)

3. Remove the knee roll trim from the parking brake area as described in Chapter S in order to gain access to the four setscrews which retain the foot pedal mechanism.

4. Disconnect the Lucar connections from the micro-switch.

5. Disconnect the brake cable from the retaining piece on the actuation lever.

6. Remove the four pedal mechanism retaining setscrews and lower the mechanism from beneath the facia.

Foot operated parking brake mechanism - To dismantle

1. Remove the foot operated parking brake mechanism as described previously.

2. Remove the spring plate and release lever return springs.

3. Dismantle the parking brake foot mechanism by removing the pivot bolts from the foot pedal lever, sprag plate, release actuator and hand release lever. Remove these items from the mounting bracket frame; collect the distance tube from each pivot.

4. Separate the release actuator from the intermediate lever by removing the clamping setscrew, collect the distance piece.

5. Inspect all items for wear and damage; renew parts as necessary.

Foot operated parking brake mechanism - To assemble (see Fig. G43)

Assembly the parking brake mechanism by reversing the procedure given for dismantling noting the following points.

1. The inside of the sprag plate hole should be sparingly smeared with Retinax 'A' grease or equivalent.

Note

The sprag rod must be clean, dry and free of lubricant.

2. The sprag plate pivot bolt should be fitted with the bolt head on the left-hand side of the frame. All other bolts should be fitted from the right-hand side of the frame.

3. Adjust the mechanism as described under Foot operated parking brake - To adjust.

4. All setscrews should be torque tightened to the figures quoted in Chapter P.

Foot operated parking brake - To adjust (see Fig. G44)

1. Slacken the setscrew securing the intermediate lever to the actuator.

2. Slowly depress the pedal from the 'off' position. The sprag plate will rise from its 'off' position for approximately one third of the sprag rod's length,

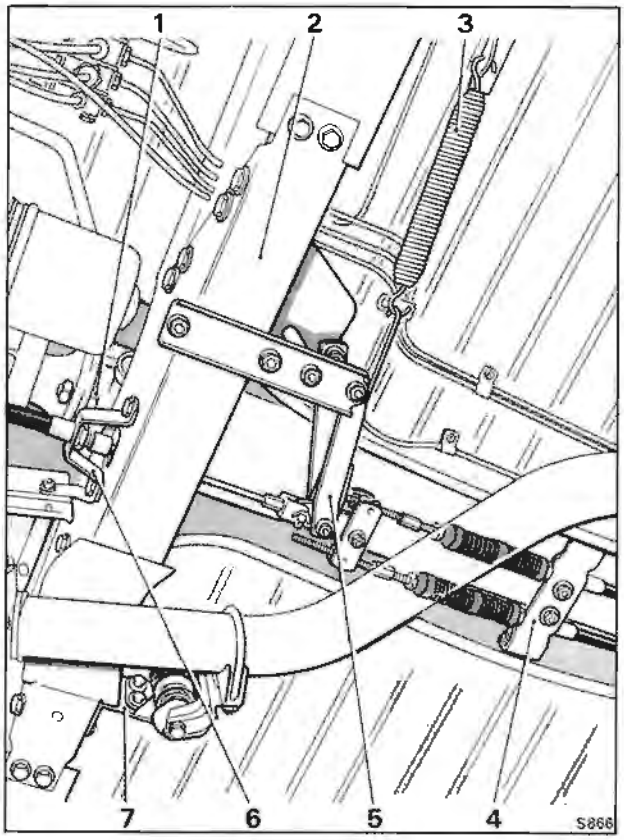

Fig. G42 Parking brake intermediate linkage (Left-hand drive cars)

1 Propeller shaft
2 Centre body member
3 Return spring
4 Abutment bracket-rear brake cables
5 Operating lever
6 Mounting bracket-front brake cable
7 Exhaust mount

then lower for the remainder of pedal travel. With the sprag plate in its highest position adjust the actuator to obtain a clearance of 0,127 mm. to 0,254 mm. (0.005 in. to 0.010 in.) between the actuator pawl and the sprag plate. Tighten the setscrew securing the intermediate lever to the actuator.

3. With the sprag rod approximately 3,17 mm. (0.125 in.) away from its rubber off stop, set the warning lamp micro-switch so that it operates i.e. the point where the switch gives an audible click. Check that the switch roller assembly is not trapped between the switch body and roller ramp when the sprag rod is against the 'off' stop.

Note

Operations 1 to 3 inclusive can be carried out with the parking brake mechanism removed from the car.

4. Release the parking brake caliper adjusters at the rear wheels to enable the parking brake pedal to be fully depressed to the floor. Check the release handle travel; there should be a minimum of 12,70 mm. (0.50 in.) extra travel (measured at the

Printed in England
© Rolls-Royce Motors Limited 1978
December 1978
T.S.D. 4200

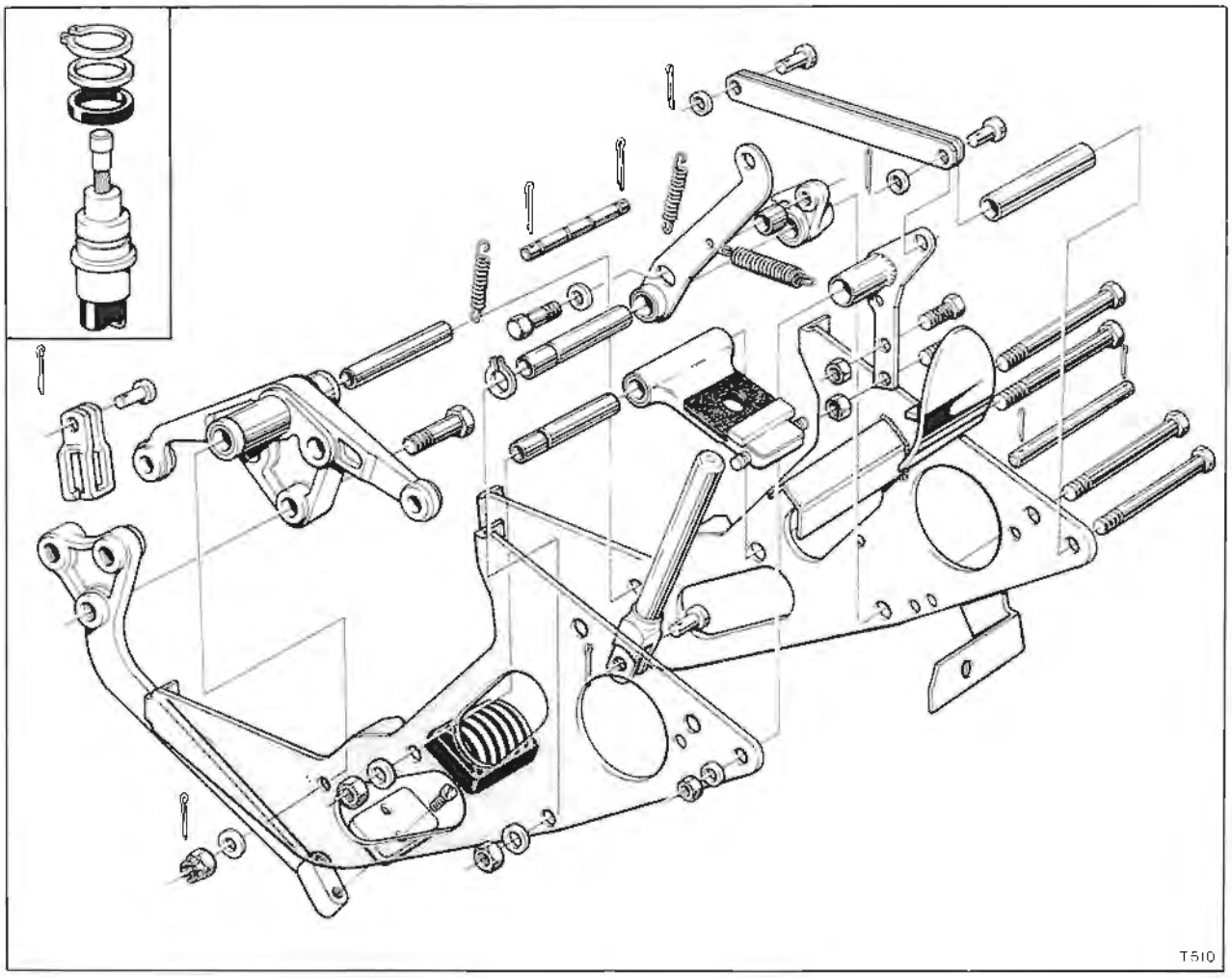

Fig. G43 Foot operated parking brake and cable connection

end of the release handle) after the point of release of the mechanism. If the handle travel is incorrect the clearance between the actuator pawl and the sprag plate should be checked as described previously in Operation 2.

5. Adjust the parking brake cables and pads as described in their relevant sections.

6. Apply the parking brake. The foot pedal should remain in the 'on' position without slipping until the mechanism is released. If slipping occurs inspect the sprag rod and sprag plate for signs of wear and replace as necessary.

7. Check that the facia warning lamp marked PARKING BRAKE is extinguished when the brake is released to the 'off' position.

Foot operated parking brake - To fit

Fit the foot operated parking brake by reversing the procedure for removal noting the following points.

1. All setscrews should be torque tightened in accordance with the figures quoted in Chapter P.

2. Care should be taken to ensure the brake cable end is located correctly in the connector link.

3. Check the operation of the parking brake as described in Foot operated parking brake - To adjust.

Parking brake front cable - To remove

Right-hand drive cars

1. Remove the hand operated ratchet assembly as described under Hand operated ratchet assembly - To remove.

2. Remove the circlip retaining the rubber seal to the brake cable on the interior side of the toeboard. Remove the seal from the cable.

3. Remove the two setscrews retaining the felt seal housing to the engine side of the toeboard. Withdraw the cable from the housing and felt seal.

4. Remove the two brake cable guide pulleys; collect the distance tube from the centre of each pulley (see Fig. G45).

5. Remove the nuts and bolts retaining the brake cable outer cover to their mountings on the underside of the body. Also remove the clips retaining the cable in position along the body.

6. Carefully withdraw the brake cable from

Printed in England
© Rolls-Royce Motors Limited 1978
December 1978
T.S.D. 4200

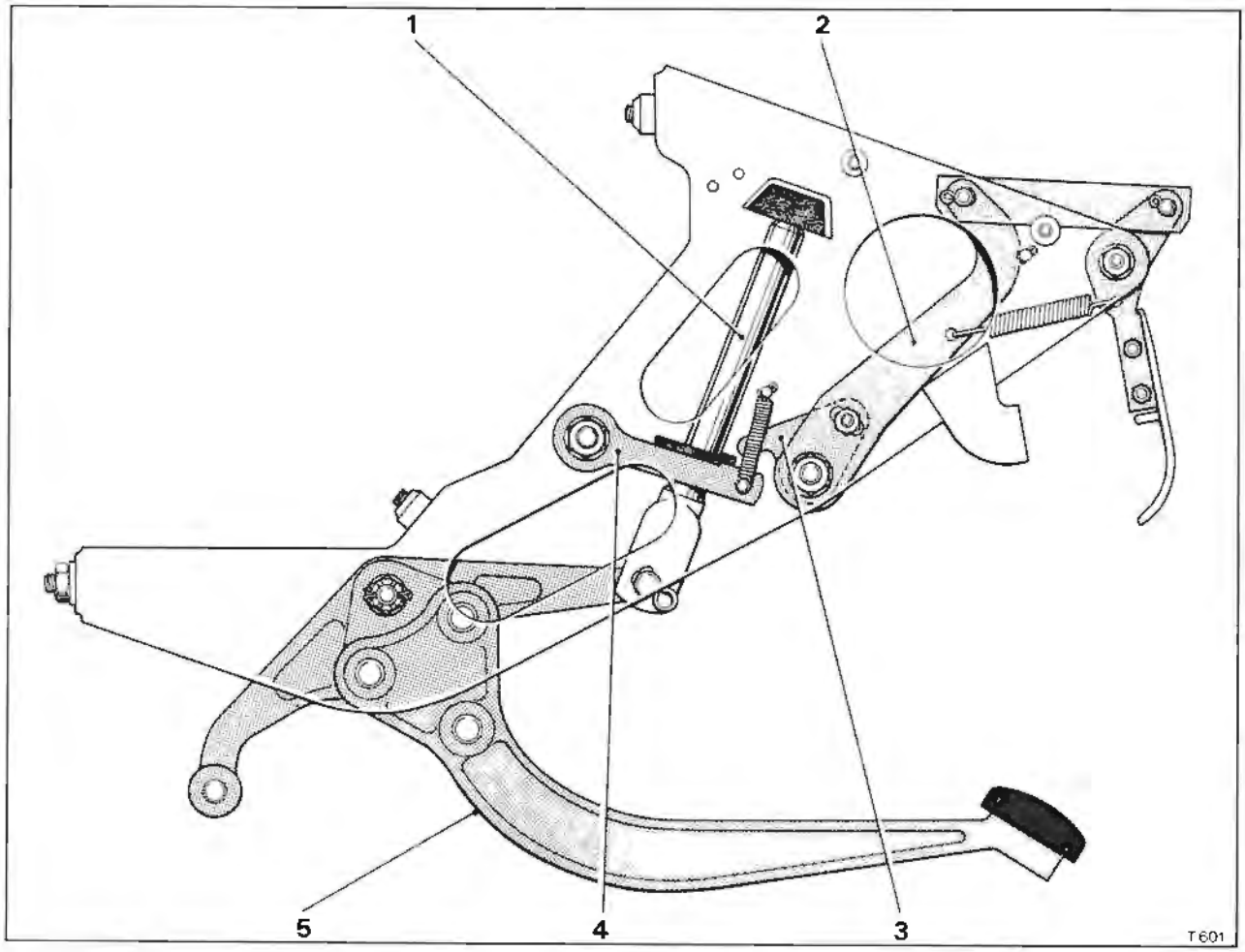

Fig. G44 Foot operated parking brake components

1 Sprag rod
2 Intermediate lever
3 Actuator
4 Sprag plate
5 Foot pedal

behind the exhaust pipe heatshield and remove it from the car.

Parking brake front cable - To fit
Right-hand drive cars

Fit the parking brake front cable by reversing the procedure given for removal noting the following points.

1. All setscrews and nuts should be torque tightened in accordance with the figures quoted in Chapter P.

2. Lubricate the guide pulley pivots with Molytone 265 grease and the pulley grooves with Midland Silicones MS44 grease.

Note

Use of any other grease on the pulley grooves could have a harmful effect on the inner cable low friction coating.

3. Ensure that the guide pulley cable retainers are correctly located in the pulley mounting brackets.

4. Check for freedom of movement during the application and release of the parking brake. The parking brake should operate freely without roughness or binding throughout its operation.

5. Adjust the parking brake cables and calipers as described under Parking brake cables and calipers - To adjust.

Parking brake front cable - To remove
Left-hand drive cars

1. Carry out Operations 1 and 2 of Foot operated parking brake mechanism - To remove.

2. Disconnect the front end of the brake cable from the retaining piece on the actuation lever of the foot pedal mechanism.

3. Remove the circlip retaining the outer cable to the car floor below the foot pedal mechanism. Withdraw the front end of the brake cable from the car floor; collect the washer and rubber seal.

4. Disconnect the rear end of the outer cable from the support bracket on the centre crossmember of the body.

5. Disconnect the clip securing the cable to the bracket on the transmission sump. Remove the brake cable from the car.

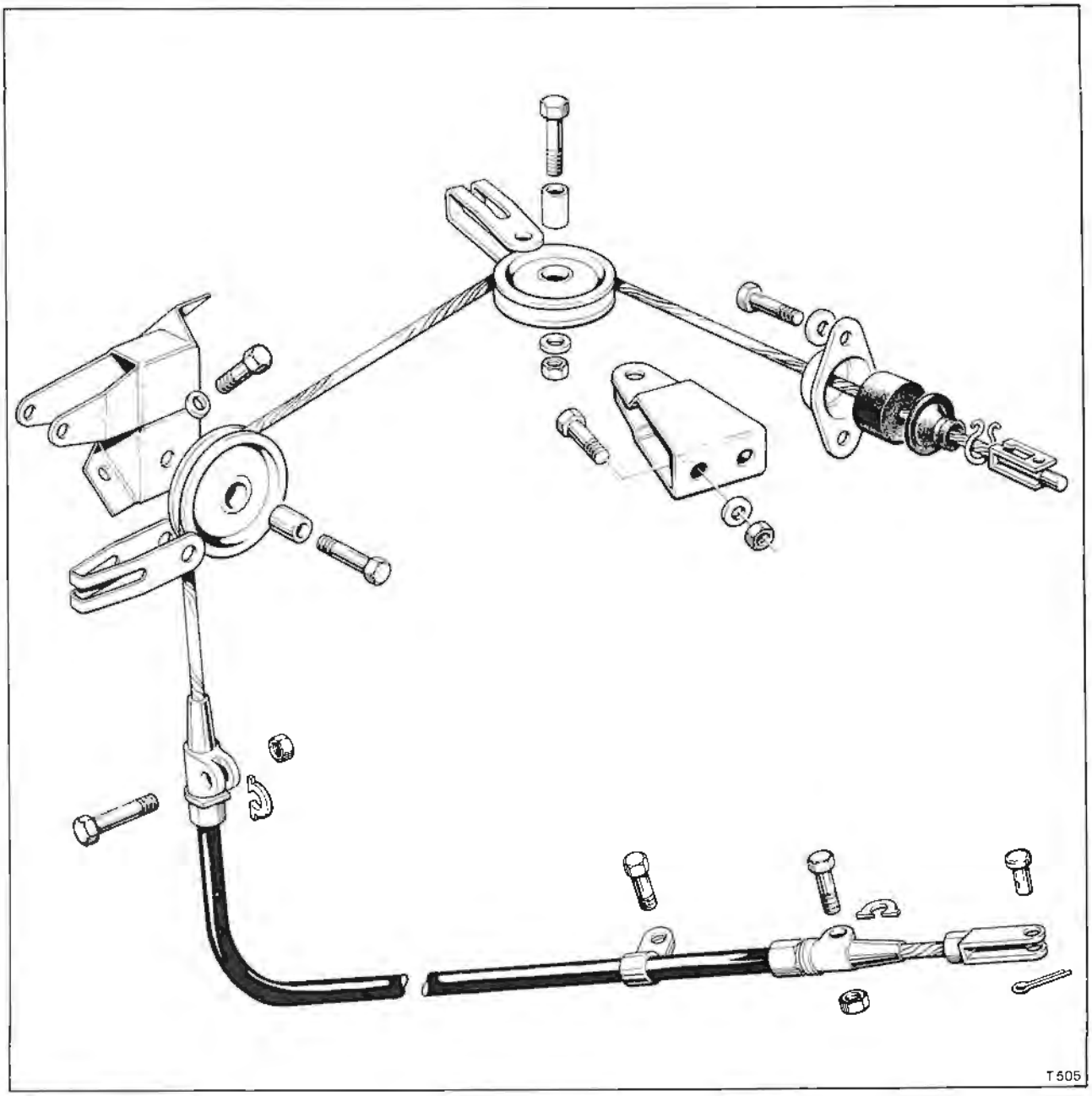

Fig. G45 Parking brake front cable and pulleys (Right-hand drive cars)

Parking brake front cable - To fit

Left-hand drive cars

Fit the front cable by reversing the procedure given for removal noting the following points.

1. All setscrews and nuts should be torque tightened in accordance with the figures quoted in Chapter P.
2. Lubricate the clevis pin with Molytone 265 grease prior to fitting.
3. Check for freedom of operation during the application and release of the parking brake. The parking brake should operate freely without roughness or binding throughout its operation.
4. Adjust the parking brake cables and calipers (see Parking brake cables and calipers - To adjust).

Parking brake rear cables - To remove

Although the parking brake intermediate linkages, situated on the centre body crossmember are different for right-hand and left-hand drive cars, the rear brake cable arrangements are identical.

1. Disconnect the rear cables at the equaliser fitted to the intermediate linkage on the centre body crossmember.
2. Disconnect the rear end of each cable from the parking brake caliper mechanism.
3. Remove the two centre bolts from the abutment bracket at the front end of the cables; collect the top clamping plate.
4. Disconnect the cable support clips from each cable; remove the cables from the car.

Printed in England
© Rolls-Royce Motors Limited 1978

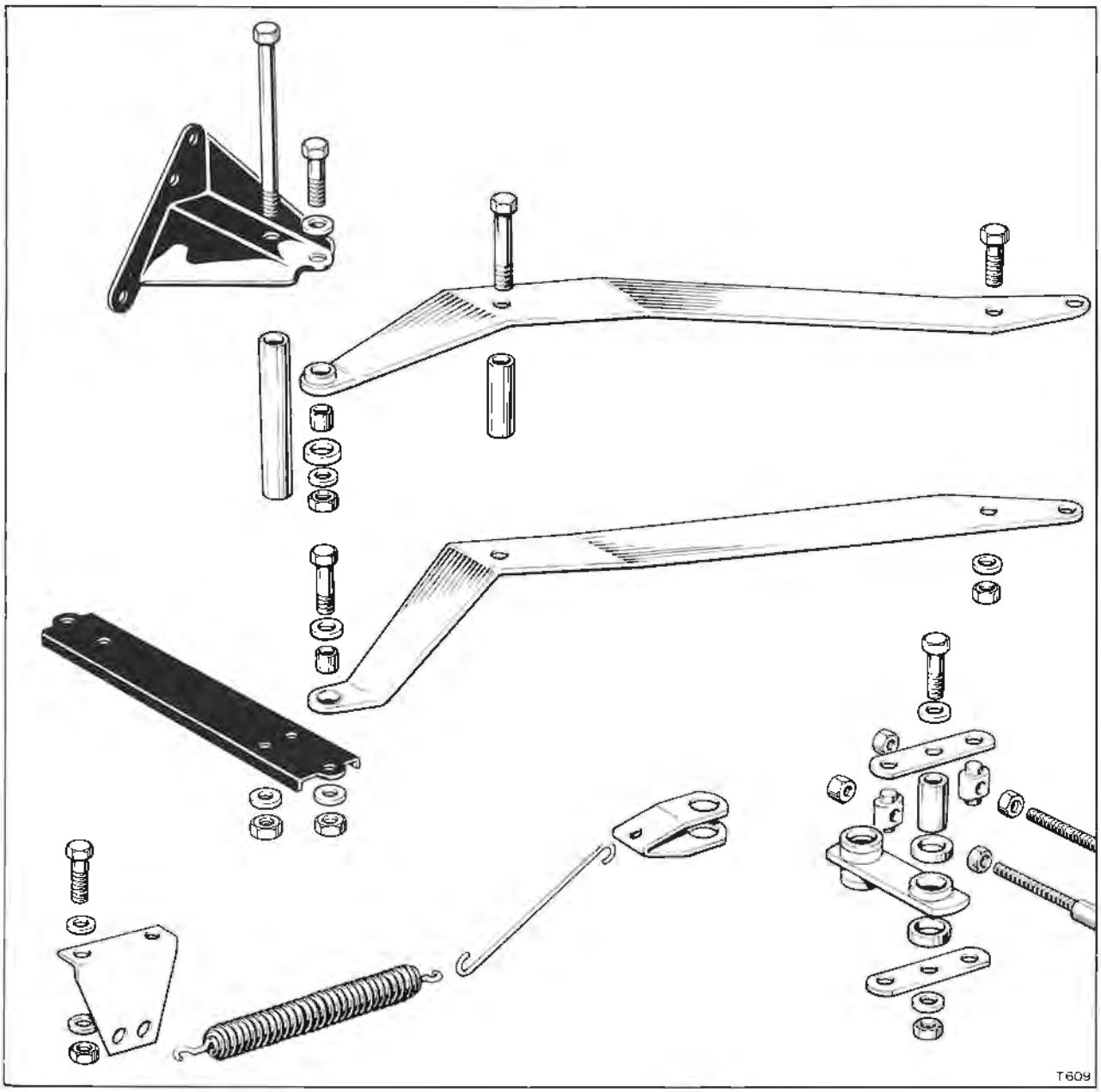

Fig. G46 Parking brake intermediate linkage (Right-hand drive cars)

Parking brake rear cables - To fit
Fit the parking brake rear cables by reversing the procedure given for removal noting the following points.
1. All setscrews and nuts should be torque tightened in accordance with the figures quoted in Chapter P.
2. Lubricate the clevis pins and cable adjustment threads with Molytone 265 grease prior to fitting.
3. Check for freedom of operation during the application and release of the parking brake. The parking brake should operate freely without roughness or binding throughout its operation.
4. Ensure that the cables are held correctly by the cable support clips. The front clip on each cable can be adjusted on elongated holes and should hold the cable firmly in position, whilst the clips on the trailing arms should allow the nylon covered section of the cable to slide freely through them.
5. Adjust the cables as described under Parking brake cables and calipers - To adjust.

Parking brake cables and calipers - To adjust
Before any adjustments are made to the parking brake rear cables the calipers on each rear wheel should be set as follows
1. Remove the clevis pin connecting the brake cable to the caliper lever. The position of the clevis

December 1978
T.S.D. 4200

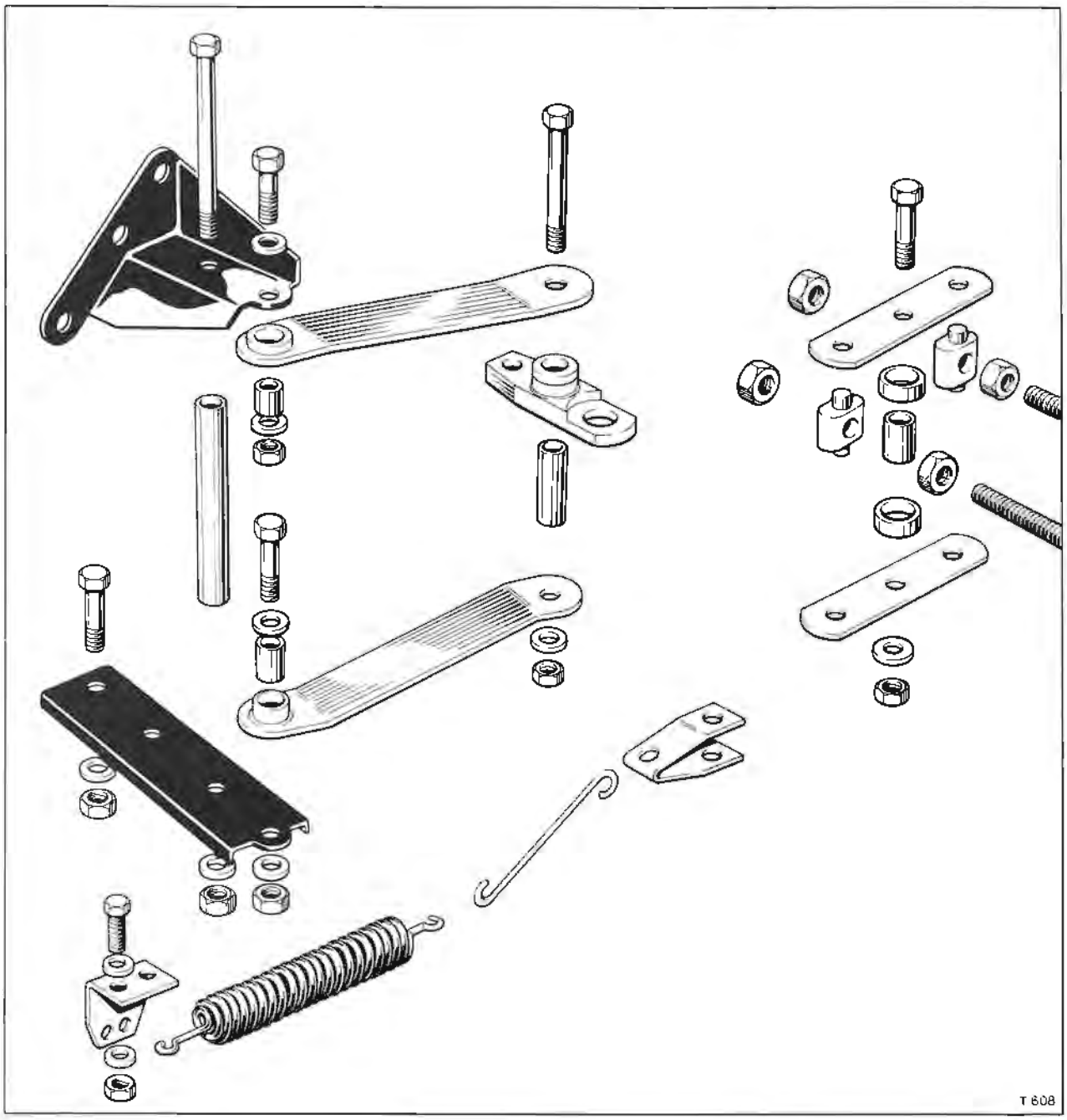

Fig. G47 Parking brake intermediate linkage (Left-hand drive cars)

pin hole in the lever must be set by correctly positioning the washers situated on the lower rear hub mounting bolts (see Fig. G38). Five washers must always be fitted to each bolt. One washer must always be fitted beneath the bolt head; the remaining four should be fitted either between the pivot bracket and trailing arm or directly below the bolt head, depending on the adjustment required. The adjustment is correct when there is a clearance of approximately 4,80 mm. (0.187 in.) between the washer on the spring guide rod and the spring abutment bracket with the caliper in the fully 'off' position.

2. Connect the rear brake cable to the caliper lever.

3. Ensure that the parking brake is in the fully 'off' position. Adjust the rear cables at the equeliser on the intermediate linkage until the caliper 'off stops' are just clear of the caliper. Measure the gap beneath each 'off stop' and lengthen the cables at the adjusters by this amount.

Note

The cables must be adjusted so that the equaliser transverse link, lies at right angles to the centre line of the car with the parking brake in the 'off' position.

4. Raise each rear wheel in turn so that it is free to rotate. Turn the caliper adjuster clockwise until the parking brake pads grip the brake disc. At this point it should only just be possible to rotate the wheel by hand. Turn the adjuster anti-clockwise a quarter turn (three clicks on the nut) to obtain minimum clearance between the pads and disc.
5. Ensure that the centralising straps are forcing the pads away from the disc when the handbrake is in the 'off' position. If not, remove the retaining bolt securing the straps; bend the straps outwards then re-assemble.
6. When new brake pads have been fitted carry out the pad bedding operation as described under Parking brake pads - To 'bed-in'.

Parking brake pads - To renew (see Fig. G49)
The parking brake pads should be inspected at the recommended intervals (see Service Schedule Manual publication T.S.D. 4117). The pads must be renewed when the friction material has worn to within 3,18 mm. (0.125 in.) of the pad back plates.
1. Securely chock the front wheels.
2. Raise the rear of the car and place sill blocks under the rear end of the body sills. Support the trailing arms; do not allow the suspension rebound straps to support the full suspension load.
3. Remove the rear wheel trims and the rear wheels.
4. Release the parking brake to the 'off' position.
5. Disconnect the twin links from the caliper lever. Collect the waved washer.
6. Unscrew and remove the caliper adjuster. Collect the adjuster clicker plate.
7. Unhook the pad retention springs from each brake pad; noting that the larger spring is fitted to the inner parking brake pad.
8. Lift out the parking brake pads from the caliper and remove the retention springs.
9. Fit the springs to the new pads, then locate the pads in position. Hook the springs onto the caliper levers.
10. Complete the assembly by reversing the removal procedure and adjusting the calipers and cables as described under Parking brake cables and calipers - To adjust.

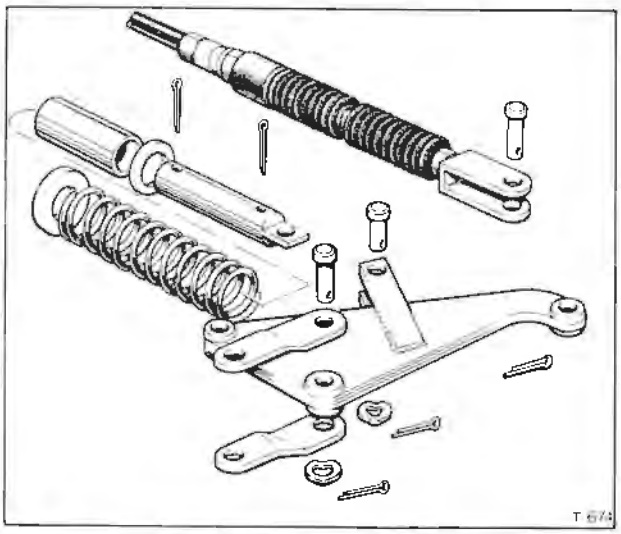

Fig. G48 Operating lever and guide rod - Parking brake caliper

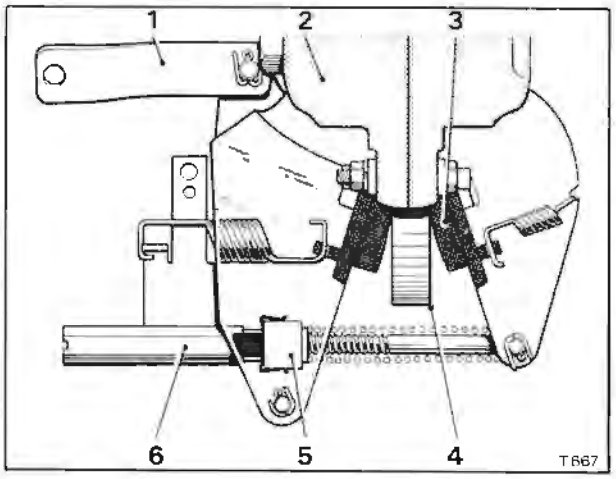

Fig. G49 Parking brake caliper
1 Twin connecting links
2 Rear brake caliper
3 Parking brake pads
4 Brake disc
5 Adjuster clicker block
6 Adjuster

Parking brake pads - To 'bed-in'
When new parking brake pads are fitted to the car the following 'bedding-in' procedure should be carried out.
1. Drive the car at 48 k.p.h. (30 m.p.h.) and apply the parking brake to bring the car to rest. The parking brake should be applied in such a way that the retardation of the car is constant without locking the wheels. This operation should be carried out nine times, allowing at least one minute to elapse between applications to prevent overheating.
2. Re-adjust the parking brake calipers as described under Parking brake cables and calipers - To adjust.

Printed in England
© Rolls-Royce Motors Limited 1978

Section G17

Brake and height control hydraulic systems

Systematic check sequence chart

Facia warning lamps 1 BRAKE PRESSURE and/or 2 BRAKE PRESSURE illuminated (Intermittently or continuously)

Sheet 1 of 2

Printed in England

© Rolls-Royce Motors Limited 1979

January 1979

TSD 4200

Operation 1

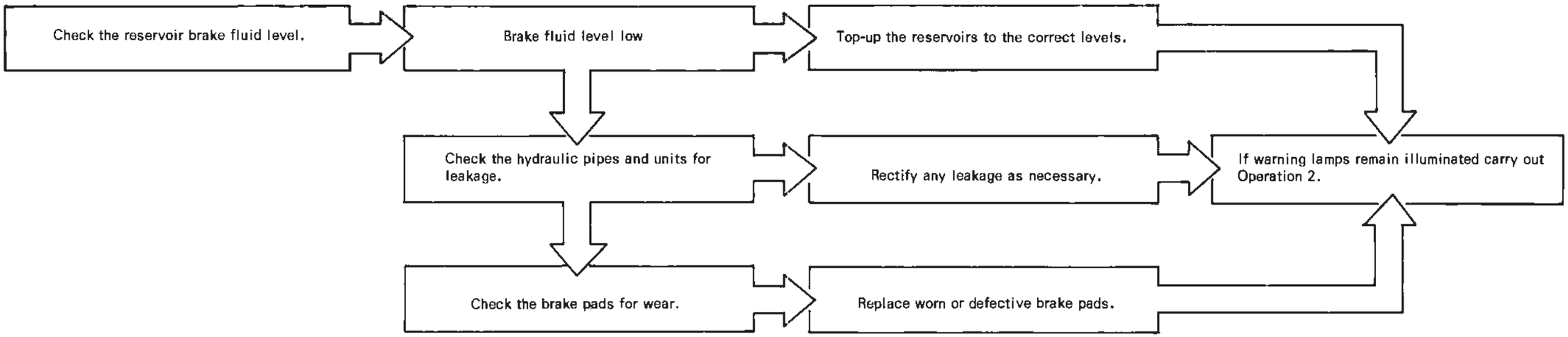

Operation 2

Depressurise the hydraulic systems (see Section G2).
Insert a length of high pressure pipe fitted with a bleed screw connection and a zero kg/sq.cm. to 210 kg/sq.cm. (zero lb/sq.in. to 3000 lb/sq.in.) pressure guage into the accumulator bleed screw tapping of the system being checked. Start the engine and allow it to idle at approximately 1000 r.p.m. Carefully observe the pressure gauge.

The correct behaviour of the gauge is as follows. The pressure gauge needle should bounce to between 63,25 kg/sq.cm. and 70,31 kg/sq.cm. (900 lb/sq.in. and 1000 lb/sq.in.) either immediately, or after two or three flicks. The pressure recorded at this point indicates the nitrogen pressure in the accumulator sphere.
The needle should then rise steadily, pulsing at camshaft speed to between 168 kg/sq.cm. and 182 kg/sq.cm. (2400 lb/sq.in. and 2600 lb/sq.in.). The pressure should then fall back and settle. This settling takes up to one minute and should not be more than 10,5 kg/sq.cm. (150 lb/sq.in.) below cut-off pressure. This indicates the correct build up and cut-off of the accumulator and that the system is functioning correctly.

The warning lamp(s) remain on.
The hydraulic pressure has built up normally indicating a fault is in the warning lamp circuit.

Check the warning light circuit and rectify as necessary.

The pressure gauge needle rises slowly from zero, or bounces up to an initial pressure of less than 63,25 kg/sq.cm. (900 lb/sq.in.) This indicates a loss of nitrogen pressure in the accumulator sphere, usually causing the warning lamp(s) to illuminate after a reduced number of brake pedal applications.

Charge the accumulator sphere with nitrogen gas to the correct pressure (see Section G7) Carry out Operation 2 to check operation of the accumulator.

The warning lamp remains on or goes out but the pressure does not build up correctly.

Carry out Operation 3
See Sheet 2 of 2

Section G17

Brake and height control hydraulic systems

Systematic check sequence chart

Facia warning lamps 1 BRAKE PRESSURE and/or 2 BRAKE PRESSURE illuminated (Intermittently or continuously)

Sheet 2 of 2

Printed in England

© Rolls-Royce Motors Limited 1979

January 1979

TSD 4200

Printed in England

© Rolls-Royce Motors Limited 1979

January 1979

TSD 4200

Operation 3

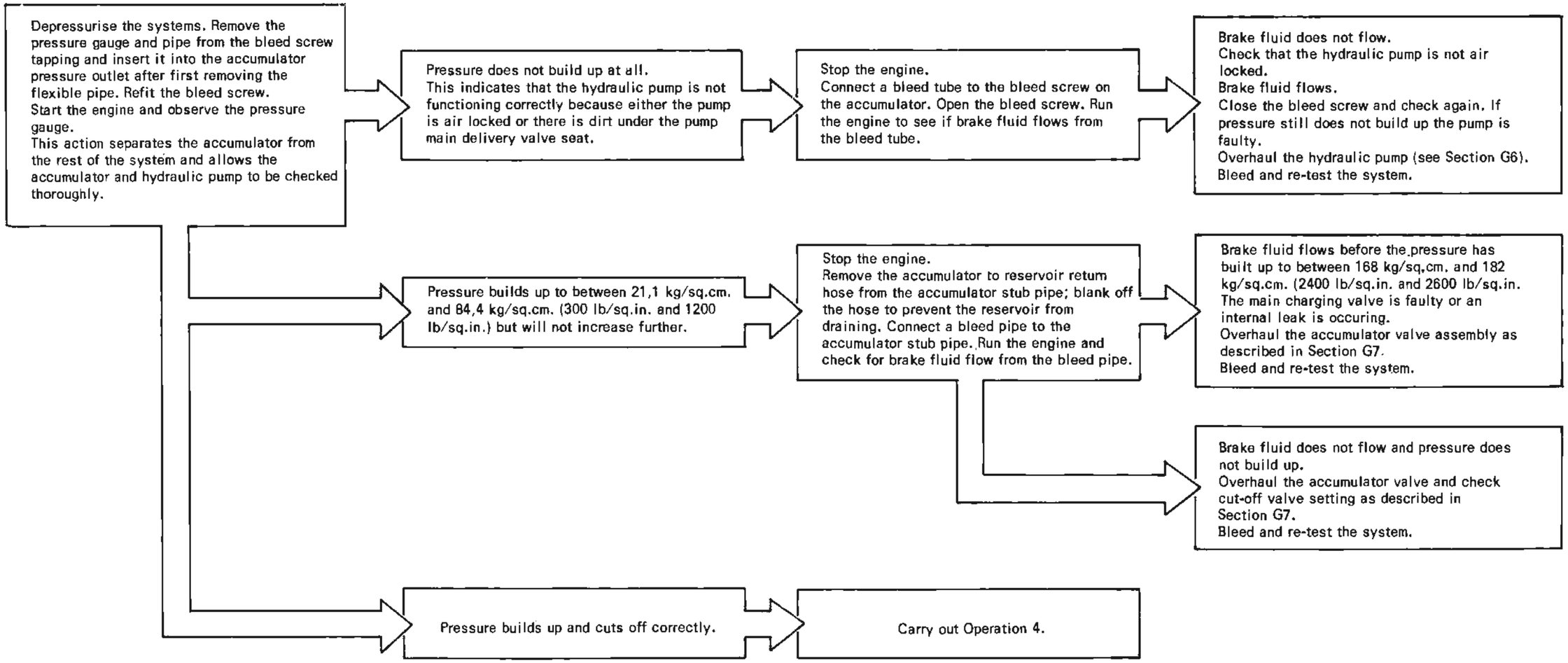

Operation 4

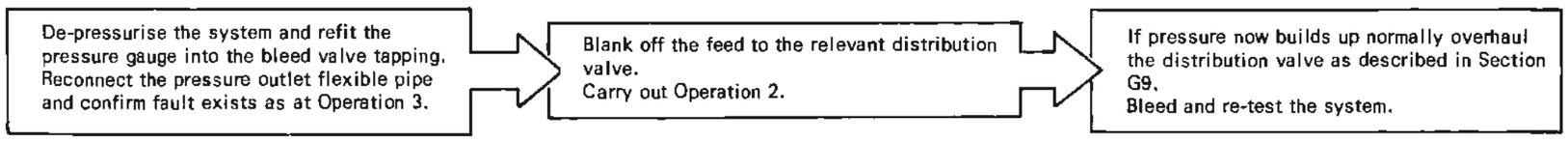

Operation 5

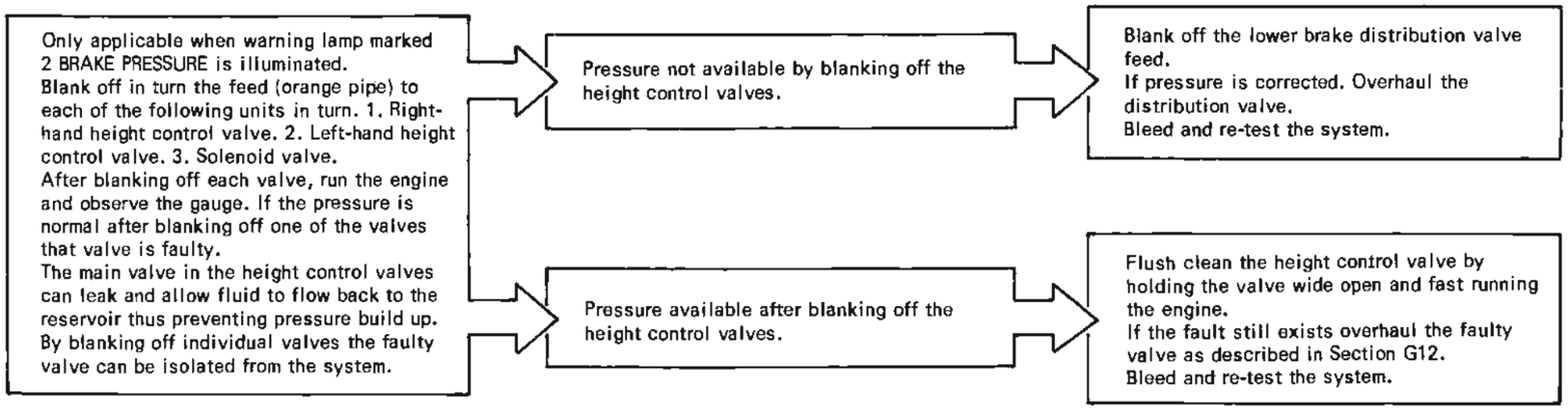

Chapter G

Part II
Hydraulic systems
Hydraulic system mineral oil (LHM)

Applicable to Corniche and Camargue cars from serial number 50 001

Section

G1m Introduction
G2m Special precautions
G3m Hydraulic system pipework
G4m Bleeding the hydraulic systems
G5m Hydraulic mineral oil reservoirs
G6m Hydraulic pumps
G7m Hydraulic accumulators
G8m Deceleration conscious pressure limiting valve
G9m Brake distribution valves
G10m Brake actuation linkage assembly
G11M Priority valves
G12M Height control valves
G13m Minimum pressure valves
G14m Gas springs and suspension struts
G15m Pressure switches
G16m Front and rear disc brakes
G17m Parking brake linkage
G18m Fault diagnosis



Printed in England
© Rolls-Royce Motors Limited 1979
February 1979
T.S.D. 4200

Mineral oil hydraulic system colour coding and component location

Right-hand drive cars

Figure G1m



Printed in England

© Rolls-Royce Motors Limited 1979

February 1979

TSD 4200

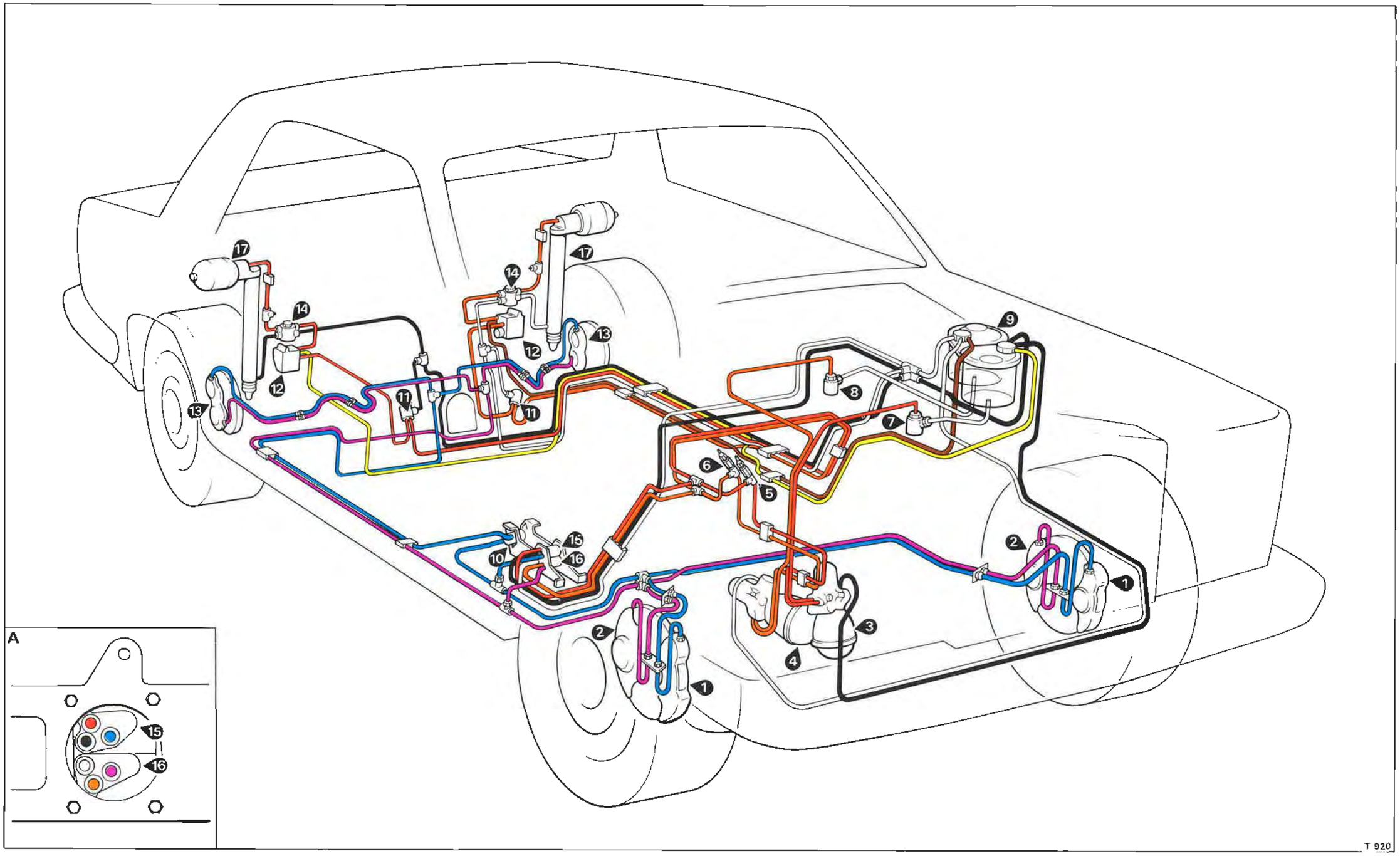

Fig. G1m Mineral oil hydraulic system colour coding and component location (Right-hand drive cars)

1 Twin cylinder disc brake caliper (No.1 system)
2 Twin cylinder disc brake caliper (No.2 system)
3 Hydraulic accumulator (No1 system)
4 Hydraulic accumulator (No.2 system)
5 Pressure switch (No.1 system)
6 Pressure switch (No.2 system)
7 Hydraulic pump (No.1 system)
8 Hydraulic pump (No.2 system)
9 Hydraulic mineral oil reservoirs
10 Deceleration conscious pressure limiting valve
11 Priority valve
12 Height control valve
13 Four cylinder disc brake caliper
14 Minimum pressure valve
15 Distribution valve (No.1 system)
16 Distribution valve (No.2 system)
17 Gas spring and suspension strut
A Distribution valve ports

Mineral oil hydraulic system colour coding and component location

Left-hand drive cars

Figure G2m



Printed in England

© Rolls-Royce Motors Limited 1979

February 1979

TSD 4200

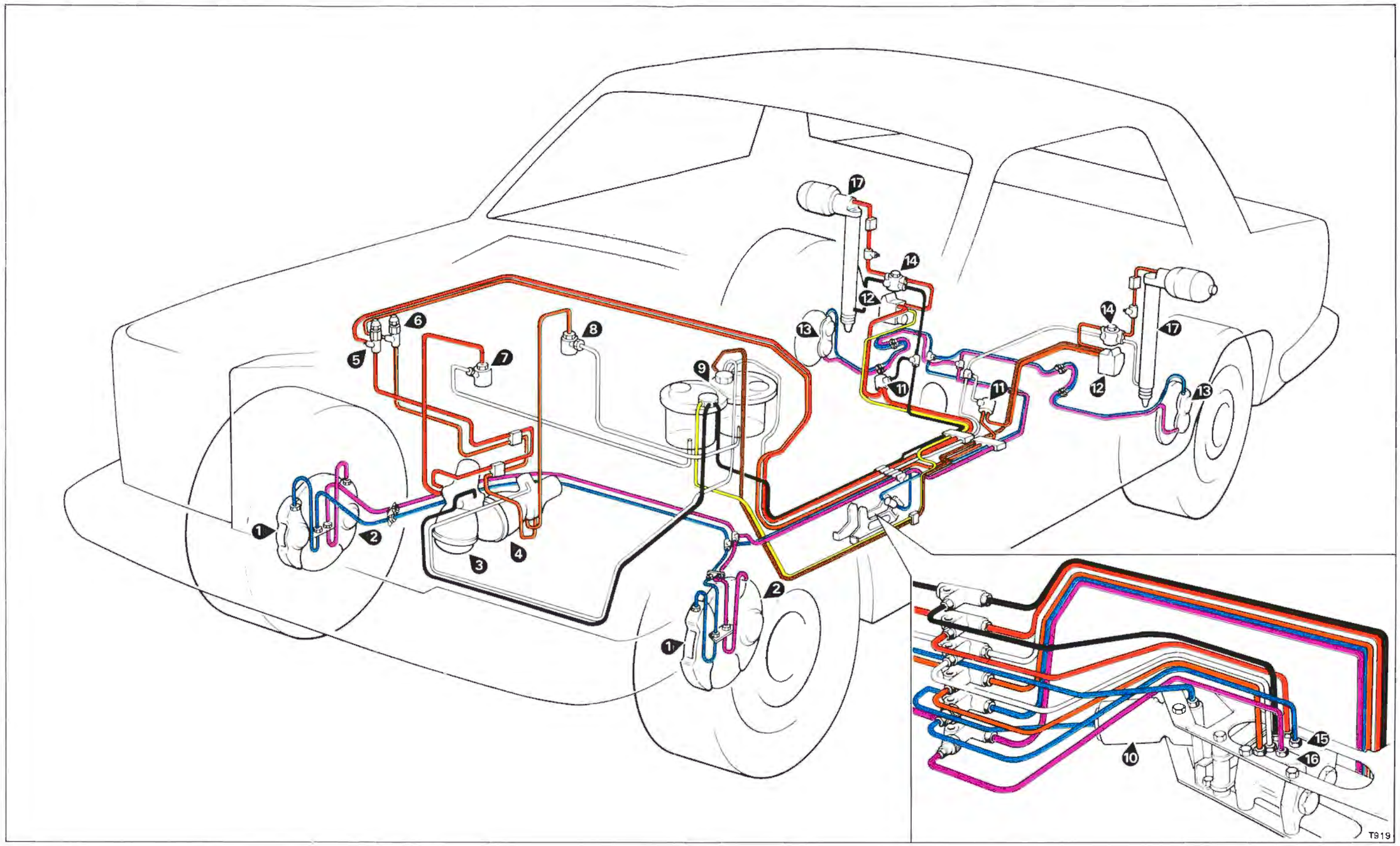

Fig. G2m Mineral oil hydraulic system colour coding and component location (Left-hand drive cars)

1 Twin cylinder disc brake caliper (No.1 system)
2 Twin cylinder disc brake caliper (No.2 system)
3 Hydraulic accumulator (No.1 system)
4 Hydraulic accumulator (No.2 system)
5 Pressure switch (No.1 system)
6 Pressure switch (No.2 system)
7 Hydraulic pump (No.1 system)
8 Hydraulic pump (No.2 system)
9 Hydraulic mineral oil reservoirs
10 Deceleration conscious pressure limiting valve
11 Priority valve
12 Height control valve
13 Four cylinder disc brake caliper
14 Minimum pressure valve
15 Distribution valve (No.1 system)
16 Distribution valve (No.2 system)
17 Gas spring and suspension strut

Diagram of hydraulic systems

Figure G3m



Printed in England

© Rolls-Royce Motors Limited 1979

February 1979

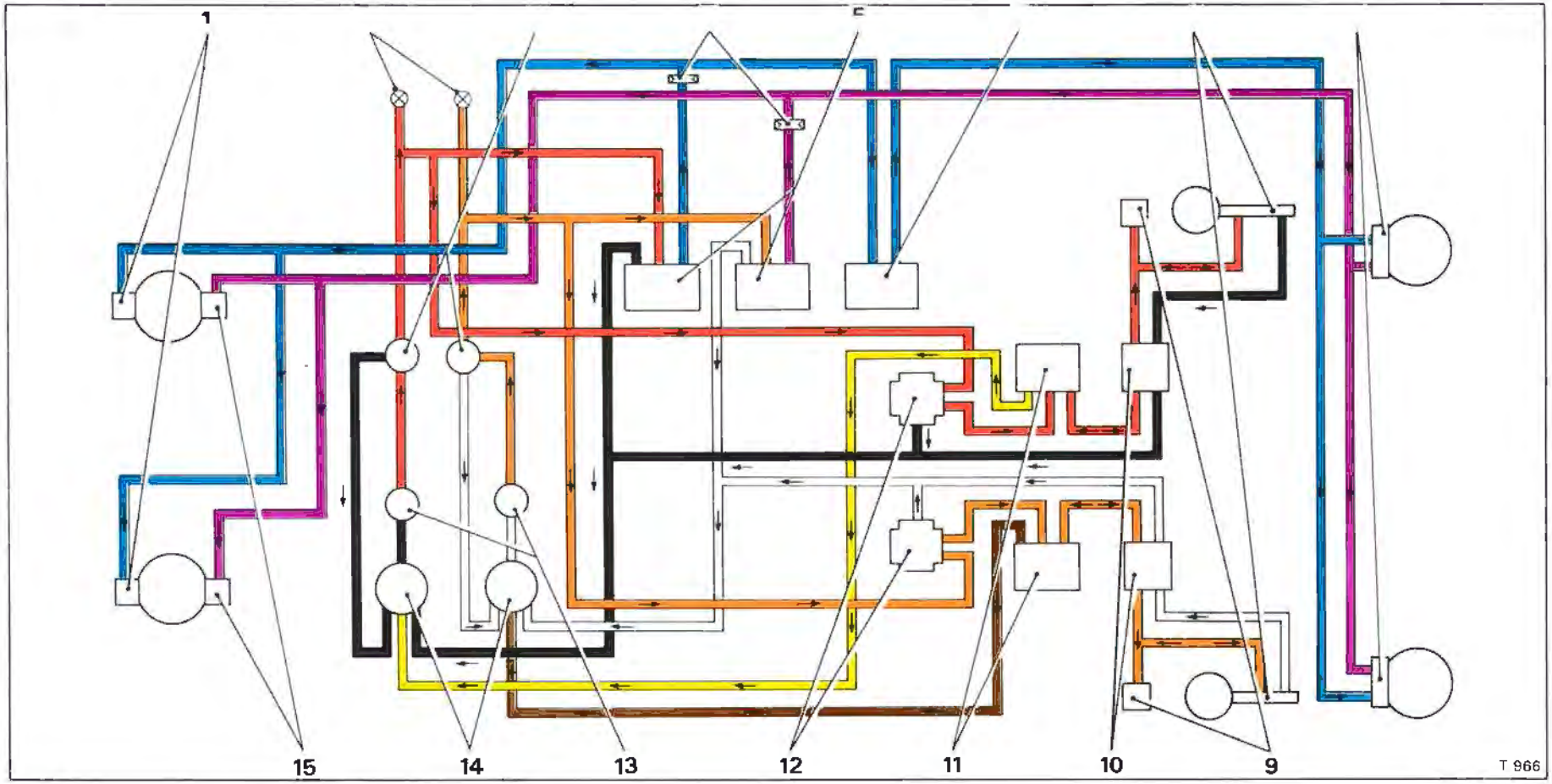

No. 1 Braking and right-hand side levelling system

High pressure
Brake line pressure
Low pressure
Levelling valve return

No.2 Braking and left-hand side levelling system

High pressure
Brake line pressure
Low pressure
Levelling valve return

Fig. G3m Diagram of hydraulic systems

1 Front wheel front brake calipers
2 Pressure switches
3 Hydraulic accumulators
4 Restrictors
5 Brake distribution valves
6 Deceleration conscious pressure limiting valve
7 Suspension struts
8 Rear wheel brake calipers
9 Suspension strut bleed points
10 Minimum pressure valves
11 Levelling valves
12 Priority valves
13 Hydraulic brake pumps
14 Mineral oil reservoirs
15 Front wheel rear brake calipers

Section G1m

Introduction

Chapter G Part II covers the components for the two independently power operated braking systems, the height control system and the mechanically operated parking brake fitted to Rolls- Royce and Bentley Corniche and Rolls-Royce Camargue cars, serial numbers 50 001 onwards.

These cars use hydraulic system mineral oil in the hydraulic systems.

The braking systems consist of two independent circuits.'System 1' operates the front road wheels, front brake calipers and the upper cylinders of the rear road wheel brake calipers. 'System 2' operates the front road wheel rear brake calipers and the lower cylinders of the rear road wheel brake calipers. All wheels are fitted with disc brakes.

Pressure for the system is supplied by two hydraulic accumulators,mounted on the 'A' bank side of the engine. The accumulators are charged by engine operated hydraulic pumps. The hydraulic pump situated in front of the engine air inlet manifold supplies hydraulic mineral oil to the front (vertically mounted) accumulator (System 1). The hydraulic pump situated at the rear of the engine supplies hydraulic mineral oil to the rear (horizontally mounted) accumulator (System 2). Both accumulators also supply pressurised hydraulic mineral oil to the height control system.

Each accumulator sphere is divided into two chambers by a diaphragm, a charge of nitrogen gas being applied and retained in one chamber by the diaphragm.

As an accumulator commences to be charged with hydraulic system mineral oil from its hydraulic pump, only a small amount of hydraulic system mineral oil is required to be pumped into the other chamber to raise its pressure to that of the initial charge of nitrogen. Hydraulic system mineral oil will continue to be pumped into this chamber against steadily increasing pressure as the diaphragm is lifted, compressing the gas above it, until the pressure regulator in the accumulator valve housing operates and unloads the hydraulic pump by allowing the hydraulic system mineral oil to bypass back to the reservoirs.The pressure of hydraulic system mineral oil stored in the sphere is maintained by the gas pressing against the diaphragm, the pressure reducing as hydraulic system mineral oil is used, until the regulator allows the pump to re-charge the sphere.

Spheres similar to those used on the accumulator but with lower nitrogen gas pressure are incorporated into the rear suspension struts, the gas under pressure acting as a spring. Hydraulic system mineral oil fed from the two accumulators flows into or out of the suspension strut spheres as varying loads are applied to the car. The quantity is controlled by the two height control valves with hydraulic system mineral oil exhausted from the suspension spheres being returned to its respective reservoir.

A pressure priority valve is incorporated into each system to ensure that the braking systems have priority over the rear suspension. If the pressure in a system(s) falls unduly the priority valve(s) will close and isolate the suspension system, allowing the pressure available to be utilised for braking purposes.

Also incorporated into each system is a minimum pressure valve. The purpose of this valve is to retain a pre-determined pressure in the rear suspension strut spheres when the engine is switched off and the car unloaded. This retention of pressure reduces the time and amount of pressurised hydraulic system mineral oil required to fully charge the hydraulic systems upon the initial starting of the engine.

The mechanical parking brake arrangement is hand operated on right-hand drive cars. On left-hand drive cars the parking brake is applied by a foot operated pedal and released by a hand lever.

Both types of brake operate two additional brake pads onto each rear brake disc.

Printed in England

© Rolls-Royce Motors Limited 1979

February 1979

TSD 4200

Section G2m

Special precautions

Printed in England

© Rolls-Royce Motors Limited 1979

February 1979

TSD 4200

Important

Hydraulic system mineral oil must be used in the hydraulic systems of cars with serial numbers from 50 001

Under no circumstances should a conventional synthetic brake fluid be substituted for the genuine hydraulic system mineral oil.

Before attempting any work on the hydraulic systems of the car, service personnel must note carefully the contents of this section and be fully conversant with the precautions required to ensure adequate safety and correct system operation.

The hydraulic systems operate at high pressure

Pipes and components must never be removed when the hydraulic systems are in a charged state.

Before any work, except specified test, is carried out on the hydraulic systems, depressurisation of the systems must be carried out.

All hydraulic system equipment should carry identification to show the type of system for which it may be used i.e. RR 363 Brake Fluid (colour reference yellow) for cars with serial numbers prior to 50 000 or Hydraulic system mineral oil (colour reference green) for cars with serial numbers from 50 001 onwards.

To assist in the identification marking of mineral oil components and equipment, self adhesive labels bearing the logo as shown in Figure G4m are available from the Parts Department at Crewe.

Hydraulic system mineral oil

Hydraulic system mineral oil is **Green** in colour. It is essential that only approved hydraulic system mineral oil is used (see Chapter D - Lubricants). Contamination of mineral oil hydraulic systems or components with any conventional vegatable or synthetic type of brake fluid will cause seals and hoses to deteriorate which could result in eventual brake faults.

To avoid contamination all mineral oil containers and components should be stored in a clearly defined area away from that used for conventional brake fluid.

Hydraulic system mineral oil can cause damage to tyres. In the event of mineral oil coming into contact with a tyre, damage can be prevented if the mineral oil is removed immediately using a soap solution. Finally wash the tyre with clean water.



Fig. G4m Hydraulic system mineral oil logo

Component identification

All components which are susceptible to damage from brake fluids are colour coded **Green** and have **GMF** prefix part numbers e.g. GMF 1062.

Other components in the system which are not susceptible to brake fluid damage (i.e. metal pipes and connectors) are neither colour coded nor do they have a GMF prefix part number. It must be stressed however that these parts must not become contaminated with brake fluid as this could circulate to other components in the hydraulic systems.

For details of individual component identification reference should be made to the relevent component section in this chapter.

Cleanliness

For the correct functioning of the hydraulic system meticulous care should be taken to ensure complete cleanliness at all times.

Since both the braking system and height control system, have components with very fine manufacturing tolerances, the ingress of even very small particles of foreign matter could have very serious effects on the operation of the systems.

Care must be taken to ensure that at all times, only clean hydraulic system mineral oil is used in the system and that any overhauled units or components are not exposed to contamination during assembly or fitting.

Contact with conventional brake fluids must be avoided at all times as these fluids have a detrimental effect on the rubber seals and hoses used in hydraulic mineral oil systems.

Depressurising the system
Method 1
Switch on the ignition and pump the brake pedal 50 to 60 times until the facia warning panels marked 1 BRAKE PRESSURE and 2 BRAKE PRESSURE are illuminated. Switch off the ignition.

To depressurise the rear suspension strut place a bleed tube to each strut bleed screw in turn. Open the bleed screw and allow the hydraulic system mineral oil to bleed into a clean container until the flow ceases.

Method 2
Open the bleed screw on both accumulators and allow sufficient time for the mineral oil pressure to discharge back to the reservoir. These bleed screws are in integral part of the accumulator, the mineral oil being allowed to flow from the accumulator sphere back to the reservoir when the bleed screw is opened (see Fig. G13m). Switch on the ignition and check that the facia warning panels marked 1 BRAKE PRESSURE and 2 BRAKE PRESSURE are illuminated.

Depressurise the rear suspension struts as described in Method 1.

Accumulator and Gas spring spheres
The accumulator and gas spring spheres are charged on one side of their diaphragms with nitrogen gas to a pressure of between 60 to 64 bars (870lb/sq.in. to 928lb/sq.in.) and 14 to 16 bars (203lb/sq.in. to 232lb/sq.in.) respectively prior to despatch from the factory.

Each sphere is marked with a band of white paint or a stick on yellow label when charged. The charge pressure in bars is stamped on the non-return valve cap at the end of the sphere.

A date of manufacture is also marked on each sphere. It is recommended that spheres are stored and issued from stock in date sequence.

Bleeding the hydraulic systems
It is recommended that the gear change thermal cut-out is removed from the fuseboard situated beneath the facia, to isolate the electric gear change whilst the systems are bled.

Only use hydraulic system mineral oil bleed equipment when bleeding the hydraulic systems. **Never connect equipment that has been used for conventional brake fluids to the system.**

The bleed screws for the accumulators are an integral part of the accumulator valve housing and bleed hose connection is not required.

Reference should be made to Section G4m.for details of the complete bleeding procedure.

When bleeding the hydraulic system, any hydraulic system mineral oil that has been spilt onto the tyres must be removed. The use of a soap solution and a final rinse with clean water is recommended for this purpose.

Under no circumstances should hydraulic system mineral oil be allowed to remain on the tyres for prolonged periods as this will cause tyre damage.

Removing components
Prior to disconnecting any pipes or removing hydraulic components from the car, the area around the pipes and components should be thoroughly cleaned. Particular attention should be given to the localised areas around the pipe unions and their corresponding ports.

Whenevever units, pipes or components are disconnected from the hydraulic systems all open ports and pipe ends must be blanked off immediately, to avoid contamination of the system.

It is stressed that the clean condition of any blanks used is equally as important as the clean condition of the components they seal.

Blanks which have been used on cars with conventional brake fluid systems should not be used, unless they have been thoroughly cleaned and all traces of brake fluid removed.

Note
Masking tape and/or cork bungs do not constitute blanks.

Quantities of blanks may be obtained, on request, from the Parts Department at Crewe.

In addition, special pressure blanks are available, capable of withstanding full hydraulic system pressure. These blanks should be used during testing and fault diagnosis procedures where it may be necessary to blank off a pipe or component and then charge the systems. When fitted these blanks must be torque tightened to the figures quoted for the pipe unions which they replace.

Cleaning components
Methylated spirit is the only recommended cleaner.

Components which have been removed should be thoroughly cleaned before replacement.

Rubber pipes, sealing rings and other components should be washed in methylated spirit and then dried with dry compressed air.

Note
When rubber seals are washed in methylated spirits, they must not be allowed to soak, as prolonged immersion could have a detrimental effect.

Metal pipes requiring the removal of underseal and road dirt from their outer surfaces, may be cleaned with trichlorethylene or paraffin. In such cases, a final cleaning procedure and flushing of the pipe internal bore using methylated spirit should be carried out. Blow dry with clean compressed air.

Cloths even the lint free types, should never be used to clean hydraulic components.

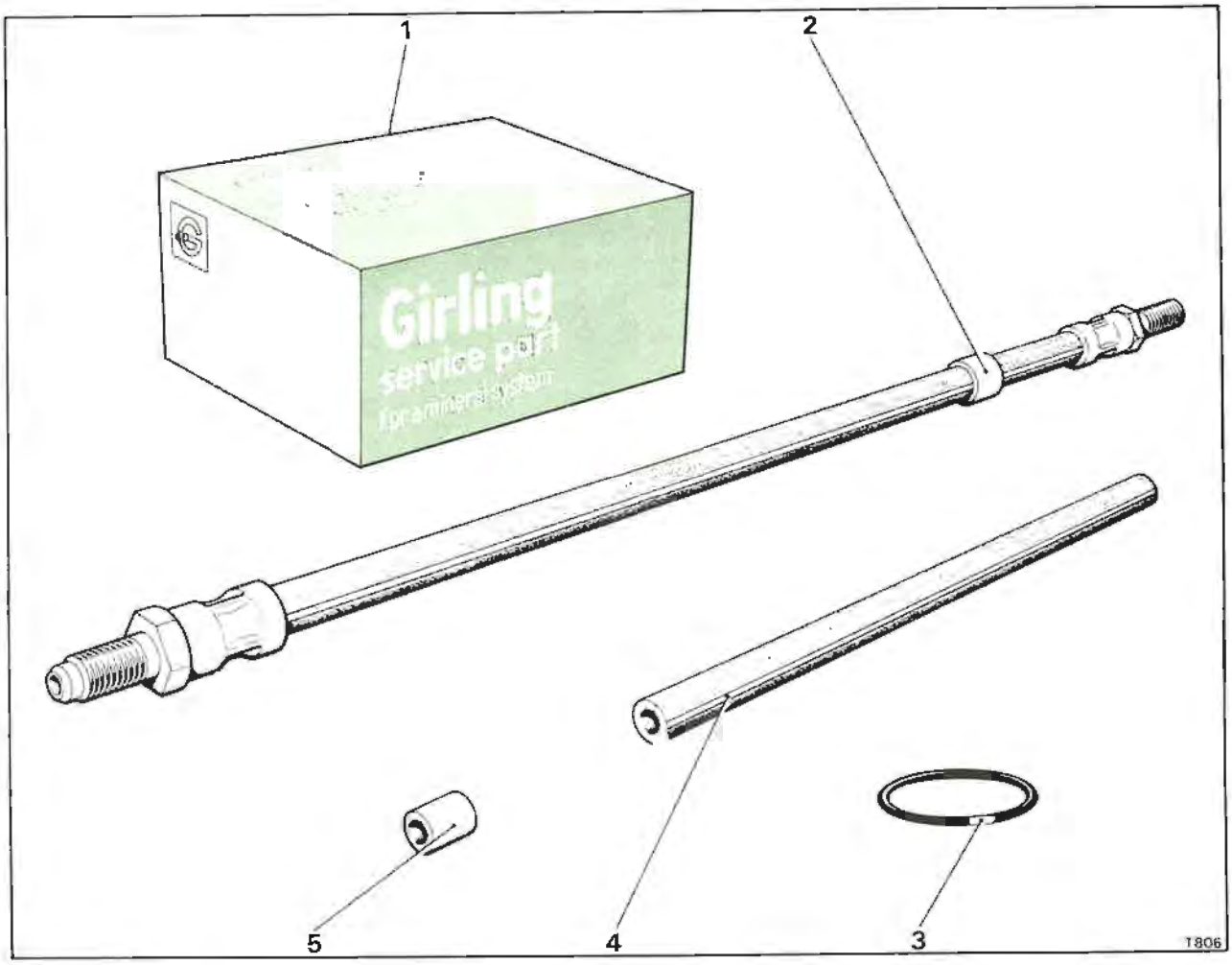

Fig. G5m Hydraulic system mineral oil component identification

1 Brake seal kit container
2 Flexible brake hose (green collar and strip)
3 Sealing ring (green paint mark)
4 Brake hose (green strip)
5 Pipe seal (green outer surface)

Service equipment

All service equipment should be clearly marked to indicate the type of hydraulic system for which it is suitable.

Under no circumstances should equipment used for conventional brake fluids be used on a mineral oil hydraulic system or component.

Only pressure gauges, test and bleed equipment bearing hydraulic system mineral oil identifications should be connected to a mineral oil system.

Hydraulic system - General maintenance

When the hydraulic reservoir and systems are drained completely always fill with fresh clean hydraulic system mineral oil of the specified type. Refer to Chapter D for the correct specification.

After filling the systems, bleed as described in Section G4m.

Servicing rubber components

In the interest of safety, the rubber components used in the hydraulic systems have been allotted specific 'life' mileages at the completion of which or at the nearest service prior to completion it is recommended that the components are renewed. Reference should be made to Service Schedule Manual publication number T.S.D.4117 for this information.

Only rubber components bearing mineral oil identification marks should be fitted to a mineral oil hydraulic system.

Under no circumstances must a rubber component for a conventional brake fluid system be substituted for the correct component.

Fitting replacement units

Replacement hydraulic units are tested and blanked

Printed in England
© Rolls-Royce Motors Limited 1979
February 1979
TSD 4200

off before being despatched from the factory.

It is advisable, when fitting a replacement unit, that when the unit has been placed in position and the blanks removed, the mineral oil in the unit is allowed to drain before the pipes are connected.

When drained, the pipes should be connected and the appropriate bleeding operations carried out.

Note
The mineral oil should not be blown out, allowing it to drain is sufficient.

Storage and transportation
The care taken to prevent contamination of components during storage or transportation is extremely important.

All mineral oil components should be stored in a seperate and clearly defined area from that used for conventional brake fluid components.

Replacement parts, pipes and units must be clearly identified and securely sealed with the correct blanks. Blanks should not be removed until immediately prior to fitting; the replacement parts must also be protected from dust and damage.

Sealing rings and rubber pipes in storage should be protected from dust, light and heat in order to reduce deteriation of the rubber.

Where mineral oil components are transported or returned to the manufacturer they should be clearly marked as being for use on mineral oil hydraulic systems.

Section G3m

Hydraulic system pipework

Printed in England

© Rolls-Royce Motors Limited 1979

February 1979

TSD 4200

Except in certain cases where flexible hoses are used to accommodate movement between two units the hydraulic system mineral oil is carried in bundy tubing.

The pipework, with the exception of the flexible hoses is almost entirely 4,76mm. (0.186 in.) diameter bundy tubing. The only exceptions are the reservoir end of the return pipe from the accumulator to the reservoir and the supply pipe from the brake pump to the accumulator, these are 6,35mm. (0.250 in.) diameter. The metal section of the feed pipes from the reservoir to the hydraulic pumps are 9,52mm. (0.375 in.) diameter. The accumulator return pipe connection is of 9,52mm.(0.375 in.) diameter but is reduced to take a 6,35mm. (0.250 in.) bore hose connection.

To enable pipe identification neoprene sleeves are fitted to each end of the metal pipes, except for the short bridge pipe fitted to each rear caliper. A chart quoting the pipe colours and functions is given on Page G3m - 2. This chart should be consulted to determine the function of each pipe i.e. high pressure, low pressure and system.

Generally, pipework connections are effected by flared pipe ends and unions, either male or female as necessary. Conical seats are machined in the components or junctions to seat the flares and provide effective joints.

On the accumulators and priorty valves a different type of connection is used requiring the fitting of a small rubber sleeve (see Fig. G6m). Sealing is achieved by deformation of the rubber when the sleeve nut is tightened.

To fit this type of connection the procedure given at the end of this section should be carried out.

In certain flexible pipe joints, face seals and copper washers are employed. A new copper washer must be fitted whenever the pipe is removed.

If hydraulic pipes are disturbed the following points should be noted.

The area around the pipe union and pipe end should be thoroughly cleaned before the union is unscrewed.

Pipe ends should always be blanked off immediately after removal. The blanks should not be removed until immediately prior to fitting.

Whenever pipes are removed, the flares should be inspected for serviceability. Pipes showing signs of damage, cracking or collapse must be renewed.

Before fitting,pipes and unions should be cleaned thoroughly using methylated spirits, then blown through with clean dry compressed air. Particular attention should be paid to the union and the exterior of the pipe immediately behind the flares.

When fitting pipes, do not overtighten unions as this could cause damage to pipe flares.

If, when a pipe is removed, the coloured sleeves are in poor condition they should be renewed. This is best achieved by expanding a new correctly coloured rubber sleeve sufficiently to clear the union, using a small three pronged expanding hand tool (i.e. Penguin pliers).

Identification sleeves are not fitted to the flexible hoses but the sleeves on the connecting pipes at either end may be used to identify the flexible pipe and its function.

The flexible and metal pipes can be readily identified by means of the colour coding and component location layout (see Figs. G1m and G2m). Also refer to the function chart shown on Page G3m-2.

Note

The two high pressure pipes from the hydraulic pumps to the hydraulic accumulators and the feeds from the reservoir to the hydraulic pumps are not marked and do not connect to any other marked pipes. Since these pipes are the only ones without means of identification confusion should not arise.

Extreme caution should be taken when fitting or renewing flexible pipes to ensure that the correct type of pipe is fitted, in the correct location and in accordance with the colour coding.

In the interest of safety, the flexible pipes fitted to the hydraulic systems have been allotted specific 'life' mileages at the completion of which or at the nearest service prior to completion it is recommended that the flexible pipes are renewed.

For recommended 'life' mileages reference should be made to the Service Schedule Manual publication number T.S.D. 4117.

When renewing flexible pipes and hoses, only those conforming with hydraulic system mineral oil requirements and bearing mineral oil identification marks should be fitted (see Fig. G5m). Under no circumstances must any other type of flexible pipe or hose be fitted.

When removing rigid or flexible pipes, the positions of all clipping points and pipe routing should be noted to ensure that, when fitted, no chafing or vibration of the pipes can occur. Always ensure that the flexible hoses and rigid pipes are routed to clear other components and that clearance is maintained during the full range of steering and

suspension movement.

It should be noted that certain 4,76 mm. (0.186 in.) diameter pipes are not available as spares and in the event of a replacement being required it is recommended that they are produced using 'Armco' 25 microns zinc plated, fully chromate passivated bundy tubing. Care should be taken to avoid sharp bends when producing replacement pipes as this will cause the plating to fracture.

Note

The pipe connection tappings on the front road wheel brake calipers, accumulators, levelling valves and priority valves have a metric thread form. Care should be taken when producing replacement pipes to ensure that the correct type of pipe nut is fitted.

All pipes must be thoroughly cleaned using methylated spirit and dried using clean compressed air. The ends should then be blanked until immediately prior to fitting.

After fitting of replacement pipes they should be leak checked and then coated with underseal if they are in an exposed position.

Non-standard torque figures are specified for certain pipe unions and fittings. These figures are given in Chapter P which also quotes all standard and non-standard torque figures. These figures must be adhered to at all times to avoid overtightening and possible damage.

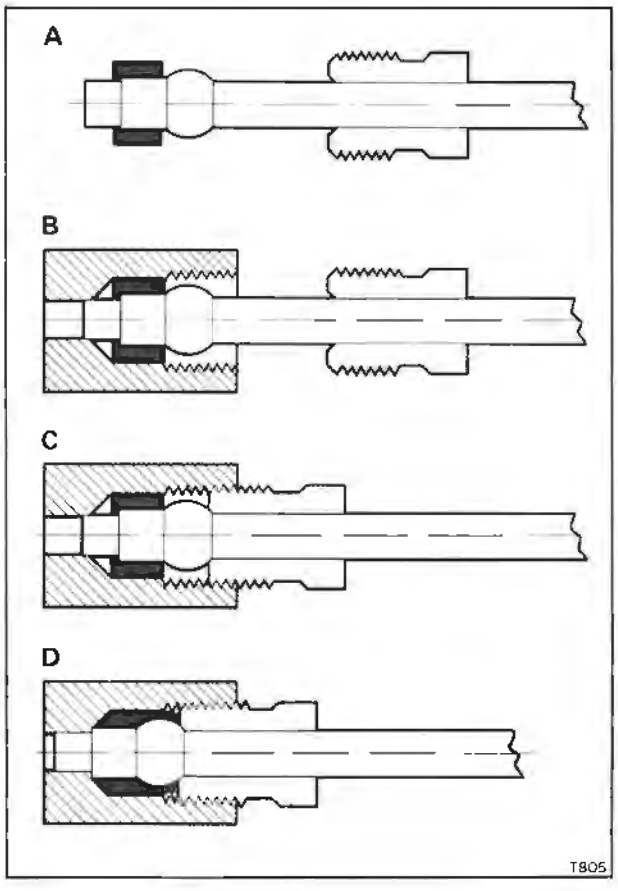

Fig. G6m Fitting a sleeved pipe connection

Rubber sleeve pipe connection - To fit (see Fig. G6m)

A. Slide the rubber sleeve onto the pipe until it abuts the collar.

B. Insert the small end of the pipe into the close fitting bore at the bottom of the threaded connection port.

C. Carefully centralise the pipe in the bore and screw in the sleeve nut until it abuts the pipe collar.

D. Torque tighten the nut to the figure quoted in Chapter P.

Note

The rubber sleeve must be renewed each time the pipe is disconnected.

It is important that the torque figure quoted in Chapter P is not exceeded as damage to the pipe end could result, causing pipe restriction and difficulty in withdrawing the pipe end from the connection bore.

Pipework colour coding

Colour	Function	Location
Red	High pressure No. 1 system	Brake and height control; pipes from the front hydraulic pump, to the front (vertically mounted) accumulator and from the front accumulator to the upper distribution valve. Also from the front accumulator to the right-hand rear levelling strut, passing through the right-hand priority valve, height control valve and minimum pressure valve.
Blue	High pressure (with footbrake applied) No. 1 system	Brake line; pipes from the upper distribution valve to the front brake calipers on the front wheels and the upper cylinders on the rear wheel brake calipers.
Yellow	Low pressure No. 1 system	Height control return; pipes from the right-hand height control valve to the front reservoir.
Black	Low pressure No. 1 system	Brake and height control; pipes from the upper distribution valve to the front reservoir and from the right-hand levelling strut through the minimum pressure valve and priority valve to the front reservoir. Also the return pipe from the front accumulator to the front reservoir.
Orange	High pressure No. 2 system	Brake and height control; pipes from the rear hydraulic pump to the rear (horizon-

		tally mounted) accumulator and from the rear accumulator to the lower distribution valve. Also from the rear accumulator to the left-hand rear levelling strut passing through the left-hand priority valve, height control valve and minimum pressure valve.
Mauve	High pressure (with footbrake applied) No. 2 system	Brake line; pipes from the lower distribution valve to the rear brake calipers on the front wheels and the lower cylinders on the rear wheel brake calipers, including the rear caliper bridge pipe.
Brown	Low pressure No. 2 system	Height control return; pipes from the left-hand height control valve to the rear reservoir.
White	Low pressure No. 2 system	Brake and height control return; pipes from the lower distribution valve to the rear reservoir and from the left-hand levelling strut through the minimum pressure valve and priority valve to the rear reservoir. Also the return pipe from the rear accumulator to the rear reservoir.

Printed in England
© Rolls-Royce Motors Limited 1979

Printed in England

© Rolls-Royce Motors Limited 1979

February 1979

TSD 4200

Section G4m

Bleeding the hydraulic systems

Introduction

In order to obtain optimum performance of the hydraulic systems, it is essential that they are free of air at all times. The two hydraulic systems are re-circulatory and therefore, if air is allowed to enter them at any point it will reduce the efficiency.

Bleed screws are provided on the side of the accumulators, on each pair of brake calipers,on each suspension strut and on the deceleration conscious pressure limiting valve. The accumulator bleed screws are an intergral part of the valve housing and do not require the connection of a bleed pipe during the bleeding operation. The bleed screws for the suspension struts are situated on each side of the car just rearward of the rear road springs and height control valves.

The accumulators are situated on the front right-hand ('A'bank) side of the engine. The accumulator for the number one system is vertically mounted and the number two system accumulator horizontally mounted.

The two hydraulic system mineral oil reservoirs are situated on the left-hand side of the engine compartment.

The front hydraulic reservoir supplies hydraulic system mineral oil for the number one system. From the reservoir mineral oil is supplied to the front brake pump, which in turn supplies hydraulic system mineral oil under pressure to the vertically mounted accumulator, the upper distribution valve, the front brake calipers on the front wheels, the upper cylinders of the rear brake calipers and the right-hand suspension strut.

The rear reservoir supplies hydraulic system mineral oil for the number two system. From the reservoir, mineral oil is supplied to the rear brake pump which in turn supplies hydraulic system mineral oil under pressure to the horizontally mounted accumulator, the lower distribution valve, the rear brake calipers on the front wheels, the lower cylinders of the rear brake calipers and the left-hand suspension strut.

When a rectification has been carried out between the brake pumps and the distribution or height control valves it will be necessary to bleed at all the bleed points in that particular circuit.

If however a rectification has been carried out between the distribution valves and the brake calipers, it should only be necessary to bleed at the bleed points between the distribution valve and the calipers in the faulty circuit.

Whenever in doubt it is advisable to bleed the complete system.

The power brake circuits should be bled at low pressure, ensuring that the systems are depressurised and the mineral oil levels in the reservoirs are kept above the minimum marks at all stages of the bleeding operation.

To obtain low pressure bleeding the system(s) must remain open at all times. Throughtout the bleeding operation, the brake pressure warning panel(s) marked 1 BRAKE PRESSURE and /or 2 BRAKE PRESSURE should be illuminated. Only when bleeding the suspension struts should the systems be fully pressurised and the warning panel lamps extinguished.

When bleeding the suspension struts, the interior of the car should be weighted to compress the suspension sufficiently for the height control valves to actuate, thus allowing pressurised mineral oil to flow to the suspension struts and bleed screws. The engine should be allowed to run for four minutes prior to bleeding, to ensure the systems are fully charged. Bleed both suspension struts until all the air bubbles have been expelled then allow fifteen seconds to elapse before fully tightening each bleed screw.

Bleeding the systems

The following information is a comprehensive bleeding operation which should be carried out to ensure removal of air from the complete hydraulic systems. However as previously stated, each system can be bled seperately at all points downstream of any replacements or pipe disconnections. A planned bleeding chart is given at the end of this section, but if any doubt exists, it is advisable to bleed the complete system concerned.

Whilst bleeding is being carried out, it is essential that the mineral oil level in the two reservoirs is kept to at least the topping-up mark on the level indicator plate, using clean hydraulic system mineral oil. Reference should be made to Chapter D for approved types.

All bleed screws should be torque tightened in accordance with the figures quoted in Chapter P.

When bleeding the hydraulic systems ensure that only equipment suitable for hydraulic system mineral oil is used. Never use equipment that has been used with a synthetic brake fluid i.e. RR 363 Brake fluid.

Attach a length of bleed tube to each bleed screw prior to the bleed screw being opened, immerse the free end of the tube in approximately

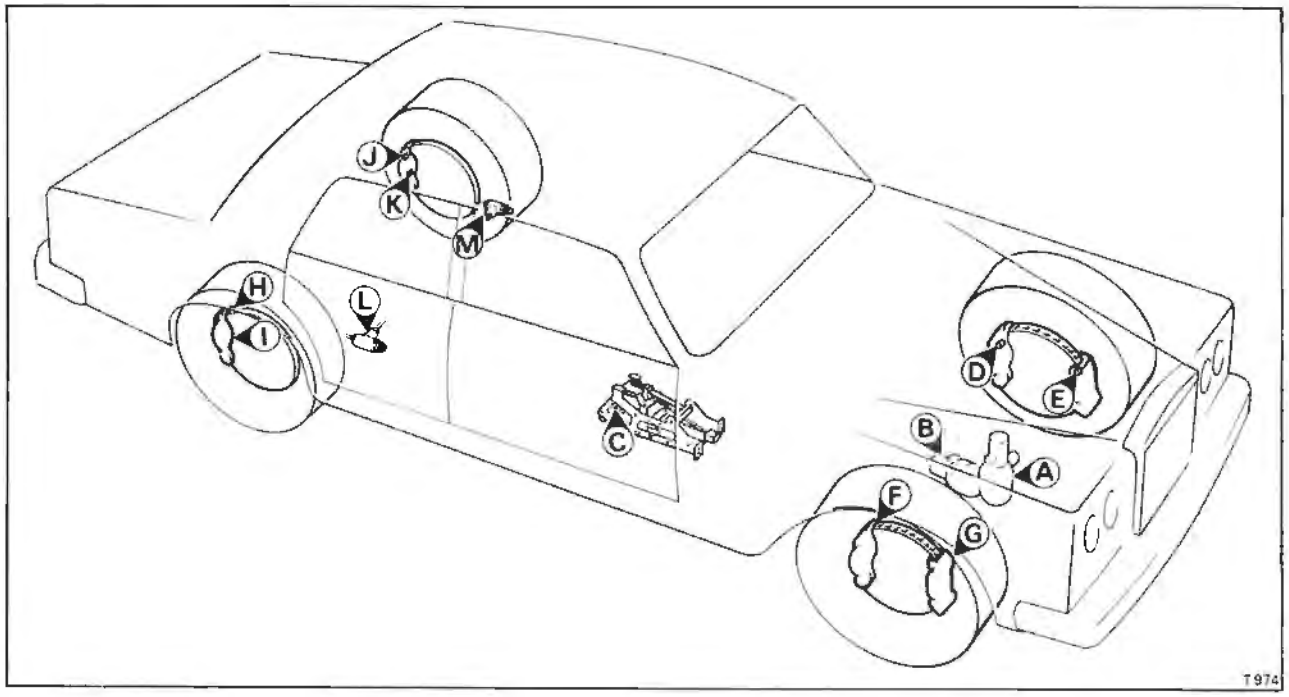

Fig. G7m Mineral oil hydraulic system bleed points

A Accumulator (No.1 system)
B Accumulator (No.2 system)
C Deceleration conscious pressure limiting valve
D Rear caliper left-hand front wheel
E Front caliper left-hand front wheel
F Rear caliper right-hand front wheel
G Front caliper right-hand front wheel
H Right-hand rear caliper (upper cylinder)
I Right-hand rear caliper (lower cylinder)
J Left-hand rear caliper (upper cylinder)
K Left-hand rear caliper (lower cylinder)
L Right-hand suspension strut (underside rear floor)
M Left-hand suspension strut (underside rear floor)

2,5 cm. (1 in.) of hydraulic system mineral oil contained in a clean bottle.

Bleed tube attachement is not necessary when bleeding the accumulators, as bleeding is effected internally through the accumulator valve housing, the mineral oil being allowed to flow back to its respective reservoir when the bleed screw is released approximately one revolution (see Fig. G13m).

With the gear selector in the 'P' park position and the parking brake applied the following sequence of operations should be carried out (refer to Fig.G7m).

Remove the gear change thermal cut-out from the fuseboard.

Depressurise the hydraulic systems as described in Section G2m. Complete depressurisation of the suspension struts is not necessary.

Open the accumulator bleed screws, Points A and B. Start and run the engine at 1 500 r.p.m. for one minute. Ensure that the facia warning panels 1 BRAKE PRESSURE and 2 BRAKE PRESSURE are illuminated.
Switch off the engine.
Close the accumulator bleed screws points A and B
Open bleed screws at points C,D and E.
Depress the foot brake pedal.
Start and run the engine at 1 000 r.p.m.
Allow points C,D and E to bleed until air free.
Open bleed screws F and G; allow bleeding to start.
Close bleed screws at points C,D and E.
Bleed at points F and G until air free.
Open bleed screws at points H and I; allow bleeding to start. Close bleed screws at points F and G.
Bleed at points H and I until air free.
Open bleed screws J and K; allow bleeding to start.
Close bleed screws at points H and I.
Bleed at points J and K until air free.
Close bleed screws at points J and K.
Release the foot brake pedal.

Add weight to rear of car to actuate levelling valves.
Allow systems to pressurise (facia warning panels extinguished).
Open bleed screws at points L and M; bleed until air free.
Close bleed screws at points L and M.
Check the hydraulic system mineral oil levels in the reservoirs and top-up as necessary.
Switch off engine.
Fit rubber dust cover to each bleed screw.

Note
System 1 BRAKE PRESSURE bleed points A, C, E, G, H, J and L. System 2 BRAKE PRESSURE bleed points B, D, F, I, K, and M.

When bleeding the suspension struts extra care should be taken when slackening the bleed screws as the system will be operating at full pressure.

Any hydraulic system mineral oil that has been spilt onto the tyres must be removed. The use of a soap solution and a final rinse with clear water is recommended for this purpose.

Under no circumstances should hydraulic system mineral oil be allowed to remain on the tyres for prolonged periods as this will cause tyre damage.

Sectional bleed requirements

Red pipe line (No. 1 system)
Any pipe disturbed between the front hydraulic reservoir, front hydraulic pump, accumulator (vertically mounted), upper distribution valve and right-hand suspension strut.

Bleed the complete system: accumulator, deceleration conscious pressure limiting valve, front calipers on the front wheels, upper cylinders on the rear wheel calipers and right-hand suspension strut.

Orange pipe line (No. 2 system)
Any pipe disturbed between the rear hydraulic reservoir, rear hydraulic pump, accumulator (horizontally mounted), lower distribution valve and left-hand suspension strut.

Bleed the complete system; accumulator, rear calipers on the front wheels, lower cylinders on the rear wheel calipers and left-hand suspension strut.

Blue pipe line (No. 1 system)
Any pipe disturbed between the upper brake distribution valve and front calipers on the front wheels and the upper cylinders on the rear wheel calipers.

Bleed the deceleration conscious pressure limiting valve, the front calipers on the front wheels and the upper cylinder on the rear wheel calipers.

Mauve pipe line (No. 2 system)
Any pipe disturbed between the lower brake distribution valve and rear calipers on the front wheel and lower cylinder on the rear wheel calipers.

Bleed the rear calipers on the front wheels and the lower cylinders on the rear wheel calipers.

After bleeding, the systems must be fully charged and the reservoirs topped-up in accordance with the instructions given on the reservoir instruction plate.

Printed in England
© Rolls-Royce Motors Limited 1979
February 1978
TSD 4200

Section G5m

Hydraulic mineral oil reservoirs

Introduction

The two hydraulic mineral oil reservoirs are situated on the left-hand valance of the engine compartment. Mineral oil for System 1 is contained in the front reservoir and for System 2 in the rear reservoir.

The reservoirs are made from a translucent material to enable the level and colour of the mineral oil to be seen. To indicate a low mineral oil level, each reservoir contains a float actuated reed switch. This switch will cause a facia warning lamp to illuminate should the mineral oil in the reservoir fall below a pre-set level.

Providing that the correct precautions are taken against the ingress of dirt into the systems and that perfectly clean hydraulic system mineral oil is always used when topping-up, the reservoirs will only require servicing at the intervals specified in the Service Schedule Manual publication number T.S.D. 4117.

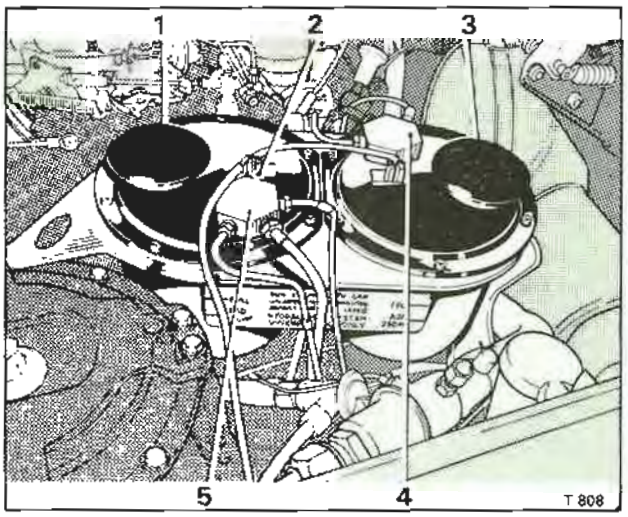

Fig. G8m Hydraulic system mineral oil reservoir
1 Filler cap (No.1 system)
2 Mineral oil level switch connection
3 Filler cap (No.2 system)
4 Pipe connection block (No.2 system)
5 Pipe connection block (No.1 system)

Hydraulic mineral oil reservoir - To remove (refer to Fig. G8m)

The reservoirs can be removed individually from their support bracket.

1. Depressurise the hydraulic systems as described in Section G2m.
2. Disconnect the battery.
3. Disconnect the Lucar connector from the top of the reservoir.
4. To drain the reservoir, slacken the hose clip situated in the centre of the reservoir to hydraulic pump supply pipe. Compress the rubber hose section of the pipe to prevent mineral oil flow, then carefully withdraw the hose off the metal connecting pipe. Place the end of the hose into a clean container and allow the mineral oil to drain from the reservoir.
5. Blank off the hose and pipe ends.
6. Disconnect the pipe connections from the top of the reservoir and ease the pipes clear of the reservoir.
7. Remove the multi-lingual information plate from the top of the reservoirs.
8. Remove the small retaining screws from the top flange of the reservoir.
9. Lift the reservoir from the mounting bracket.

If necessary repeat the above operations to remove the remaining reservoir.

Reservoir - To dismantle, clean and assemble (refer to Fig.G9m)

1. Drain and remove the reservoir as described under Hydraulic mineral oil reservoir - To remove.
2. Carefully remove the reservoir lid and seal.
3. Remove the screws securing the reed switch and float assembly to the underside of the reservoir lid. Ensure that no foreign matter adheres to the magnet on the reed switch float.
4. Remove the reservoir filler neck filter.
5. Using a suitable broad ended screwdriver placed between the bottom of the reservoir and the outlet filter carefully ease the filter off its snap-on connection neck.

Note

When removing the inlet and outlet filters care should be taken to ensure that, the fine mesh of the filters is not torn or damaged.

Care must also be taken during dismantling and cleaning to ensure that the reed switch stem is not bent or damaged, as this will cause the switch to be inoperative.

6. Thoroughly clean all parts with methylated spirits, drying them with dry compressed air. Ensure that all holes and adapter threads are carefully cleaned and have blanks fitted.
7. Assemble the reservoir by reversing the dismantling procedure.

Printed in England
© Rolls-Royce Motors Limited 1979
February 1979
TSD 4200

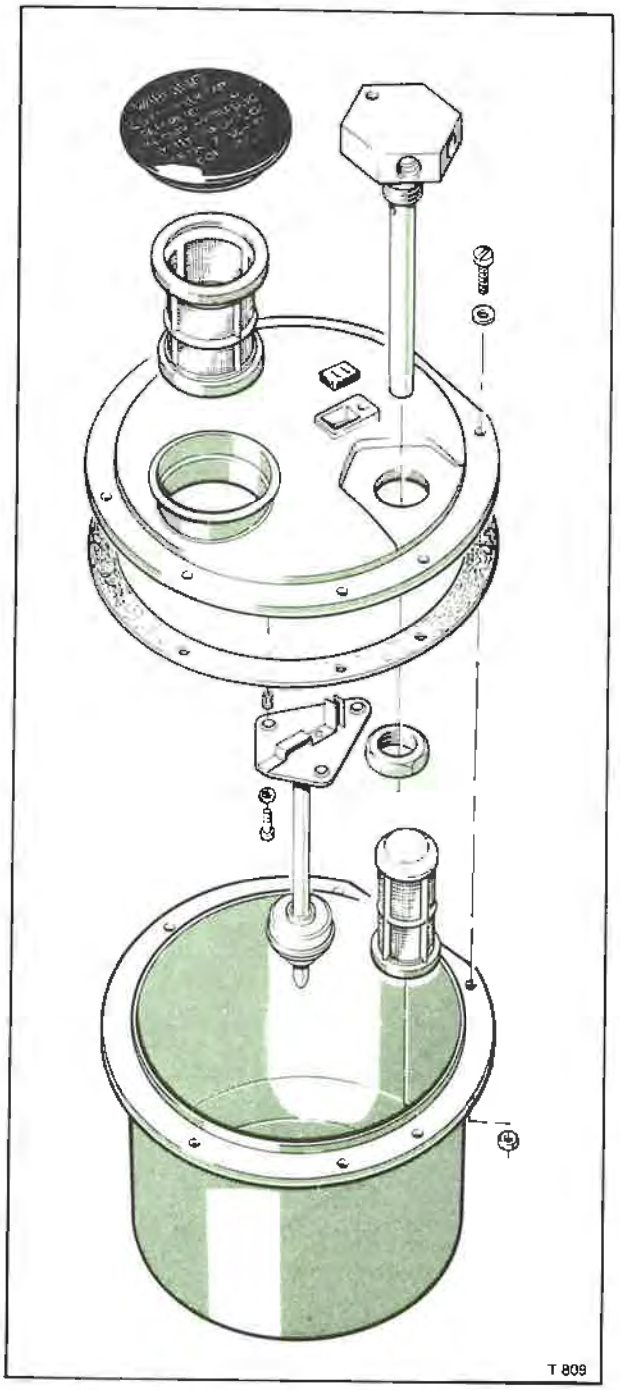

Fig. G9m Hydraulic system mineral oil reservoir

Reservoir - To fit and top-up

Fit the reservoir(s) by reversing the procedure given for removal noting the following points.

1. When the reservoir(s) have been fitted ensure that all pipes are connected and torque tightened (see Chapter P).
2. Fill the reservoirs with clean hydraulic system mineral oil (see Chapter D) until the levels in the reservoirs are slightly above the topping-up mark on the level indication plate.
3. Run the engine for approximately four minutes, then top-up the reservoir to the correct levels. Never allow the mineral oil levels to fall below the minimum level.
4. Check for leaks especially around all unions and pipes which have been disturbed.
5. The hydraulic system(s) must then be bled completely as described in Section G4m.

Reed switch - To remove

In the event of a low mineral oil level reed switch being faulty renewal can be carried out as follows.

Drainage of the reservoir is not necessary.

1. Remove the multi-lingual information plate from the top of the reservoirs.
2. Disconnect the battery.
3. Disconnect the Lucar connection from the top of the relevant reservoir.
4. Disconnect the pipe connections from the manifold block on top of the reservoir.
5. Remove the screws retaining the reservoir lid; carefully lift the lid and allow the mineral oil to drain from its underside before removing the lid completely.
6. Remove the screws retaining the reed switch to the underside of the reservoir lid and remove the reed switch Ensure that no foreign matter adheres to the float magnet.

Reed switch - To fit

To fit a reed switch, reverse the procedure for removal noting the following points.

1. All parts should be thoroughly cleaned with methylated spirits prior to assembly.
2. All screws and pipe connections should be torque tightened in accordance with the figures quoted in Chapter P.

Printed in England

© Rolls-Royce Motors Limited 1979

February 1979

TSD 4200

Section G6m

Hydraulic pumps

Introduction

The hydraulic pumps used on cars with a mineral oil hydraulic system, can be distinguished from those used on conventional brake fluid systems, by the green plastic disc fitted beneath the top adapter of the pump and the smaller pressure outlet adapter.

Internally the pump has a larger diameter plunger than pumps using RR 363 brake fluid and seals to meet mineral oil requirements.

The brake pump push rod has a collapsible section of increased diameter; the top edge of the push rod being chamfered for identification (see Fig. G10m).

Never fit a brake pump or push rod from a conventional (RR 363) brake fluid system as a replacement.

When overhauling a mineral oil brake pump always ensure that sealing rings bearing mineral oil identification marks are fitted (see Section G2m).

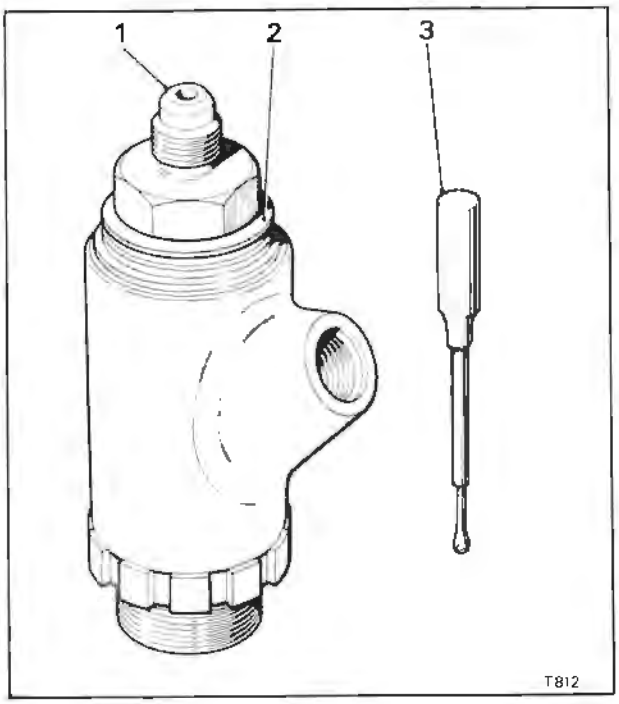

Fig. G10m Mineral oil hydraulic pump identification features

1 Smaller pipe connection
2 Green disc
3 Chamfered end face

Hydraulic pump housing sealing rings - To renew

If hydraulic system mineral oil leakage occurs from a brake pump housing it is possible to renew the two sealing rings with the pump(s) in position using the following procedure.

1. Depressurise the hydraulic systems as described in Section G2m.

2. On cars fitted with a Solex carburetter remove the air cleaner.

3. Ensure that the pump(s) and the surrounding area is thoroughly clean.

4. Compress the rubber hose section of the hydraulic pump low pressure inlet pipe to prevent mineral oil flow. Remove the hose from the pump inlet stub pipe. Suitably blank the hose end or allow the hydraulic system mineral oil to drain into a clean container.

Note

To enable work to be carried out on the rear hydraulic pump the ignition distributor should be removed as described in Chapter M.

To gain access to the front hydraulic pump; on cars fitted with a Solex carburetter, the fuel pipes should be removed from above the hydraulic pump.

On cars fitted with an exhaust emission control system, the three way connector and check valve must be removed.

5. Disconnect the high pressure outlet and low pressure inlet pipes from the hydraulic pump.

6. Remove the circlip from the top of the pump and draw the outer housing upwards and off the pump.

7. Discard the two sealing rings; fit new sealing rings lubricated with clean hydraulic system mineral oil of the approved type.

8. Fit the pump outer housing, aligning the port with the inlet pipe. Press the housing firmly into position then fit the circlip.

9. Prime the pump with approved hydraulic system mineral oil. Connect the low pressure feed and high pressure outlet pipes to the pump, also connect the low pressure hose from the reservoir.

10. Top-up the reservoir(s) with approved hydraulic system mineral oil (see Chapter D) and bleed the hydraulic systems as described in Section G4m.

Hydraulic pumps - To remove

1. Carry out Operations 1 to 6 inclusive of Hydraulic pump housing sealing rings - To renew.

2. Using special box spanner (RH 8428) unscrew and remove the pump from its pedestal on the tappet chest cover; blank off the pedestal against the ingress of dirt.

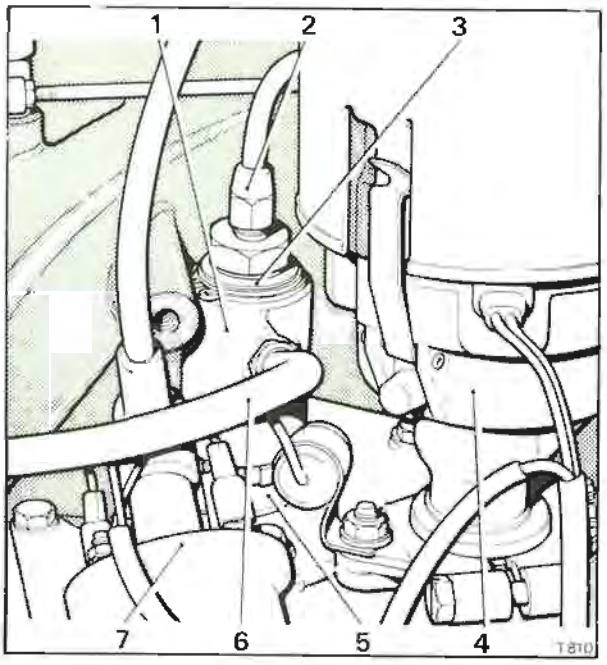

Fig. G11m Rear hydraulic pump (No.2 system)

1 Pump outer housing
2 High pressure outlet pipe
3 Green identification disc
4 Ignition distributor
5 Pump mounting pedestal
6 Low pressure inlet pipe
7 Ignition coil

Note
The pump cannot be removed using the top adapter as a spannering point.

Hydraulic pump - To dismantle
When two pumps are being dismantled the components from each pump must not be interchanged.

1. Remove the adapter from the top of the pump and withdraw the non-return valve assembly from the bore.

Gentle use of a small screwdriver may be necessary to assist removal of the chamfered washer. If the washer has spread it should be discarded and a new one fitted on assembly.

2. Remove the inlet valve ring, spacer ring and conical valve spring.

3. From the lower end of the pump remove the circlip and withdraw the plunger and spring coller; collect the spring.

4. Carefully withdraw the plunger barrel from the pump body.

Note
The barrel and plunger are a matched ground component and pieces are not interchangeable with pieces from other assembles.

5. Remove and discard the three 'O' rings from the pump body.

6. To dismantle the non-return valve assembly, remove the circlip, push out the valve from the outer body and collect the spring, end stop and valve.

Hydraulic pump components - To clean and inspect
Important
Ensure that all components are absolutely clean.

Tapped holes require special attention to ensure that they are free from foreign matter and slivers of thread which might break off during assembly and become entrapped in the hydraulic system. One method of achieving this is to screw slave adapters or setscrews down the threads before thoroughly cleaning the components in methylated spirits and drying with dry compressed air, not cloth.

It is important that the seating of the valves is correct and that the finely machined barrel and plunger are not scored or damaged.

Under normal circumstances after a thorough cleaning and the introduction of a new set of sealing rings, the only parts that might need renewal are the small coil springs.

Hydraulic pump - To assemble (refer to Fig. G12m)
Lubricate the components and sealing rings with approved hydraulic system mineral oil (see Chapter D) prior to fitting into their respective positions. Ensure all sealing rings being used are for use with hydraulic system mineral oil.

1. Lubricate all parts including sealing rings with approved hydraulic system mineral oil (see Chapter D) prior to fitting in their respective positions.

2. Fit the small 'O' ring into position in the centre bore of the pump body.

3. Insert the plunger barrel into the pump body, pressing it through the sealing ring until it abuts the shoulder.

4. Insert and locate the spacer; fit the valve spring (crowned face towards inlet valve) and the inlet valve into position adjacent to the barrel head. Ensure that the seating face of the valve is free from damage marks otherwise the efficiency of the pump will be reduced.

5. Assemble the non-return valve, reversing the procedure given for dismantling. Ensure that the valve is fully seated and the circlip correctly located in its groove. The end stop should be drawn upward to abut the circlip.

6. Fit the non-return valve assembly, larger diameter leading, into the pump body bore to abut the inlet valve ring.

7. Fit the chamfered sealing ring, small bore diameter leading into the pump body bore to abut the shoulder to the non-return valve.

8. Fit the adapter to the top of the pump body; torque tighten to the figure quoted in Chapter P. Blank off the union.

9. Fit the coil spring into the lower end of the pump body.

10. Fit the spring collar to the barrel plunger and carefully insert the plunger into the bore of the barrel.

11. Depress the plunger against the spring sufficiently to enable the circlip to be fitted in its location.

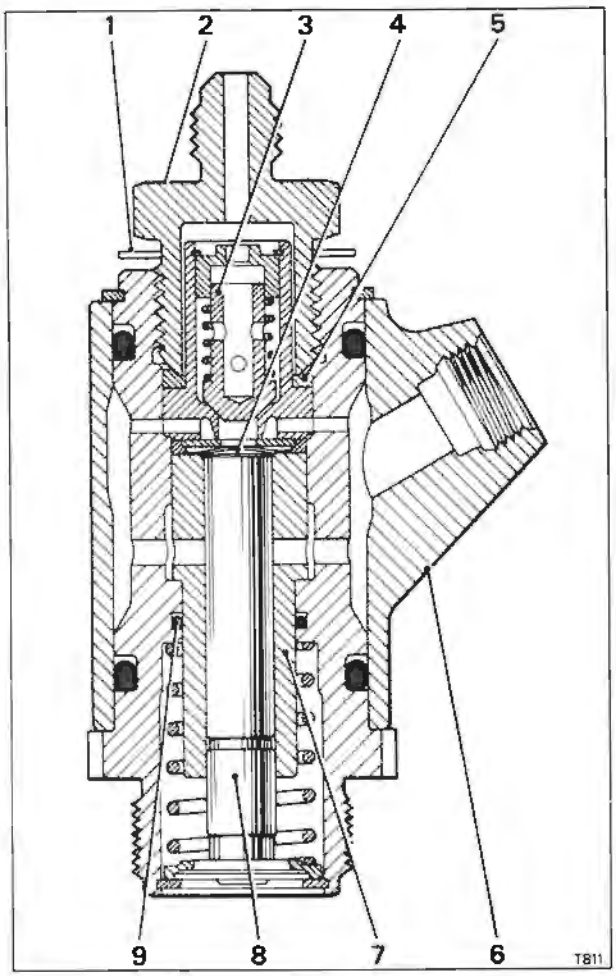

Fig. G12m Hydraulic pump

1 Identification disc
2 Adapter - high pressure inlet
3 Non-return valve
4 Inlet valve
5 Chamfered ring
6 Outer housing
7 Pump barrel
8 Plunger
9 Sealing ring

1. The hydraulic pump and pipe connections should be torque tightened in accordance with the figures **12.** Fit the two 'O' rings to the outside of the pump body. The pump is now ready for fitting to the engine.

Hydraulic pump - To fit and set

Prior to fitting the pump to the engine tappet cover flange, ensure that the shim washer fitted between the pump mounting flange and tappet cover is of the correct thickness and that the push rod is the correct type (see Fig. G10m). For the correct setting procedure of the pump reference should be made to Chapter E.

To fit the hydraulic pump, reverse the procedure for removal noting the following points.

quoted in Chapter P. The pump should only be tightened using special box spanner (RH 8428); the top adapter should never be used as a spannering point.

2. Bleed the hydraulic systems as described in Section G4m. Check all disturbed pipe connections for leaks.

Hydraulic pumps - To test (on the car)

1. Depressurise the system as described in Section G2m.

2. Disconnect the accumulator to reservoir return pipe at the manifold on top of the respective reservoir. Attach a bleed tube onto the end of the pipe, place and secure the other end of the tube in a clean measuring vessel.

3. Open the bleed screw on the accumulator which is supplied by the brake pump being checked.

4. Ensure that the appropriate reservoir is full and start the engine.

5. Hydraulic system mineral oil should flow from the bleed tube in a series of spurts, coinciding with each revolution of the camshaft. The rate of flow should be approximately 300 ml. per minute at an engine speed of 1 000 r.p.m.

6. If hydraulic system mineral oil does not flow or the pumped quantity is below requirements, the pump should be removed and overhauled.

Printed in England
© Rolls-Royce Motors Limited 1979

Section G7m

Hydraulic accumulators.

Introduction

The hydraulic accumulators are mounted at the front of the crankcase on 'A' bank side of the engine.

The front accumulator which is vertically mounted supplies the No.1 Hydraulic system, the horizontally mounted rear accumulator supplies the No.2 Hydraulic system.

Both accumulators have an internal bleed screw incorporated in the valve housing. Bleeding or depressurising of an accumulator is achieved by slackening the bleed screw (see Fig. G13m) approximately one revolution. This allows the hydraulic system mineral oil to return internally through the valve housing to its respective reservoir.

In the event of accumulator failure only the accumulator valve assembly, the sphere or a complete accumulator are available for replacements. All spheres will be charged to a pressure of between 60 bars and 64 bars (870 lb/sq. in. and 928 lb/sq. in.) prior to despatch from the manufacturer, the charge pressure in bars being stamped on the screw head at the top of the sphere. Whenever a sphere is found to be below working pressure a replacement sphere must be fitted; **no attempt should be made to recharge the sphere.**

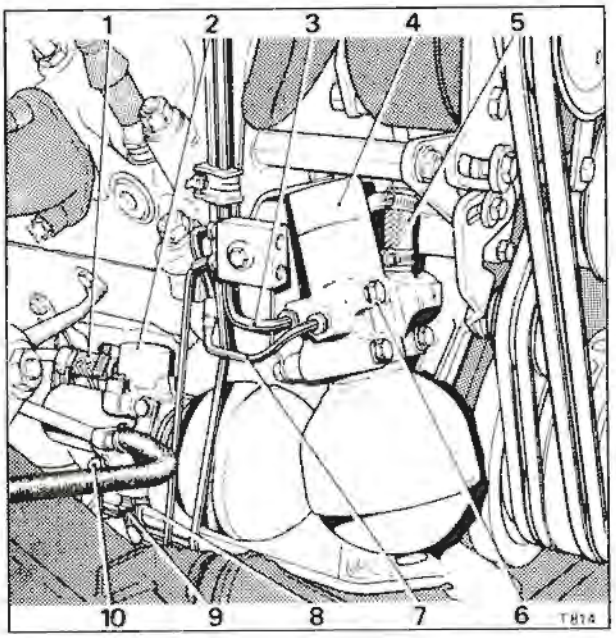

Fig. G13m Hydraulic accumulators

1 Low pressure return to reservoir
2 Accumulator (No.2 system)
3 High pressure inlet from pump
4 Accumulator (No.1 system)
5 Low pressure return to reservoir
6 Bleed screw
7 High pressure outlet to upper distribution valve and right-hand suspension strut
8 High pressure inlet from pump
9 High pressure outlet to lower distribution valve and left-hand suspension strut
10 Bleed screw

Hydraulic accumulator - To remove

It should be noted that the high pressure pipe connections on the accumulators are of the rubber sleeve type (see Section G3m). All pipes and ports should have blanks fitted when disconnected.

1. Depressurise the hydraulic system as described in Section G2m.

2. Disconnect the high pressure outlet pipe (orange or red) from the accumulator and connector block; remove the pipe.

3. Disconnect the high pressure inlet pipe from the accumulator.

Note

When removing a front accumulator it will be necessary to detach the outlet pipe connector block from its mounting bracket to allow the inlet pipe to be withdrawn from the accumulator port.

4. Fit a hose clamp to the intermediate hose of the accumulator return pipe to prevent the flow of hydraulic system mineral oil from the reservoir.

5. Unscrew the worm drive clip on the small accumulator return pipe connection and withdraw the pipe and hose from the accumulator.

6. Remove the setscrew from the mounting bracket at the end of the accumulator.

7. Support the accumulator, then remove the two remaining securing bolts; collect the distance pieces. Lower the accumulator from the engine.

Hydraulic accumulator - To fit

Fit the accumulator to the engine by reversing the procedure given for removal noting the following points.

1. When fitting the high pressure pipe connections new rubber sleeves must be fitted to the pipe ends. For fitting instructions reference should be made to Section G3m.

2. All setscrews and pipe connections must be torque tightened in accordance with the figures quoted in Chapter P.

3. After fitting, top-up the reservoir(s) with

Printed in England
© Rolls-Royce Motors Limited 1979

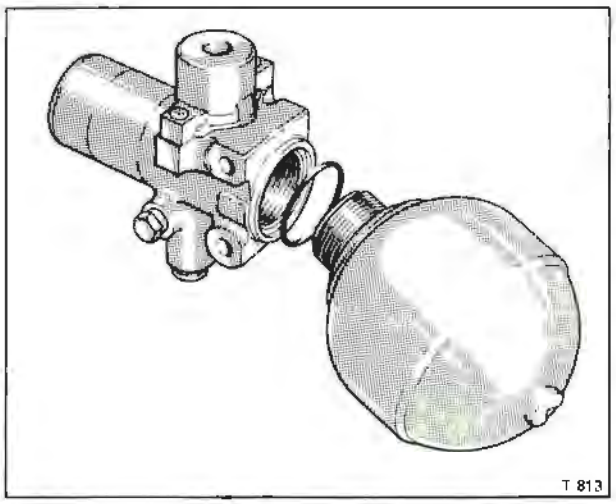

Fig. G14m Hydraulic accumulator with sphere removed

recommended hydraulic system mineral oil (see Chapter D). With the engine running leak check all joints and unions which have been disturbed.
4. Test the accumulator as described in Hydraulic accumulator - To test.
5. Bleed the hydraulic system(s) as described in Section G4m.

Hydraulic accumulator sphere - To renew (see Fig. G14m)
1. Remove the accumulator as described under Hydraulic accumulator - To remove.
2. Carefully hold the valve body of the accumulator in a vice, then using a suitable strap spanner located around the circumference of the sphere, unscrew and remove the sphere from the valve housing. Discard the sealing ring.
3. Locate a new sealing ring lubricated with clean hydraulic system mineral oil into the valve body.
4. Fit the new sphere to the valve body and torque tighten to the figure quoted in Chapter P.
5. Fit the accumulator as described under Hydraulic accumulator - To fit.

Hydraulic accumulator - To test
1. Depressurise the hydraulic system as described in Section G2m.
2. Replace the pressure switch of the relevent system with a length of high pressure pipe fitted with a bleed screw connection and a 210 kg/sq. cm. (3 000 lb/sq. in.) pressure gauge (RH 9546).
3. Start the engine. The gauge needle should immediately rise to 63 kg/sq. cm. (900 lb/sq. in.) indicating the nitrogen gas pressure in the accumulator sphere. The pressure should then slowly rise to a pressure of between 167 kg/sq. cm. and 177 kg/sq. cm. (2 393 lb/sq. in. and 2 538 lb/sq. in.). At this pressure the accumulator cut-out valve should actuate and the pump cease to charge the accumulator.
4. After the cut-out pressure has been reached note the pressure to which the gauge settles. This settling takes up to one minute and the pressure should not be more than 10,5 kg/sq. cm. (150 lb/sq. in.) below the cut-off pressure. The pressure should then remain steady unless the brake pedal is applied or the height control system actuated.
5. Fit a bleed tube onto the bleed screw of the gauge connecting pipe. Open the bleed screw and allow the pressure gauge reading to fall. When the pressure has fallen to between 142 kg/sq. cm. and 152 kg/sq. cm. (2 031 lb/sq. in. and 2 176 lb/sq. in.) the accumulator control valve should allow the hydraulic pump to recharge the accumulator.
6. If, on first starting the engine, the pressure gauge needle fluctuates violently, rapidly climbs to 175,5 kg/sq. cm. (2 500 lb/sq. in.) and then immediatly falls to zero on application of the brake pedal, a complete loss of nitrogen gas pressure from the accumulator sphere is indicated.
7. In the event of the nitrogen gas pressure of the accumulator being less than 42 kg/sq. cm. (600 lb/sq. in.) (refer to Operations 3 and 6) the accumulator sphere must be renewed.
8. If the cut-in and cut-out pressures of the accumulator are outside the limits quoted in Operations 3 and 5 the accumulator valve assembly must be renewed.
9. If the pressure continues to fall after the accumulator has reached the cut-out pressure of between 167 kg/sq. cm. and 177 kg/sq. cm. (2 393 lb/sq. in. and 2 538 lb/sq. in.) and then settled an internal leak is indicated.
10. If observation of the gauge shows that the pump is still pumping (needle fluctuating with the pump pulses) without giving a rise in pressure then there is a leak equal to the pump flow at that pressure. Pump 'cut-out' indicated by the change of audible note of the pump can be heard if the end of tne engine dipstick is placed on top of the pump and used as a hearing aid.

To verify an accumulator internal leak, depressurise the system and remove the outlet pipe from the pressure switch threeway connection. Blank off the port using a blank capable of withstanding full hydraulic system pressure. Repeat the test. If the symptoms persist, the accumulator valve assembly has an internal leak and the valve assembly should be renewed. If however the gauge now behaves correctly and the pump can be heard to cut-out the leakage is occuring downstream and a component isolating procedure should be under-taken.

The component isolating procedure necessary to locate the fault consists of depressurising the systems then removing or blanking off the pressure feed to the various components in turn and repeating the test procedure.

The pressure feeds to the components can be readily identified from the colour coding chart (see Section G3m).

Note
Always ensure that the mineral oil in the reservoirs

is above the minimum level at all times during the test procedure.
When a unit has been blanked off, before removing the blank, the systems must be depressurised either by continuous system operation with the engine switched off or by bleeding the appropriate accumulator until it is depressurised.

After tests have been carried out involving blanking off components all blanks should be removed and components reconnected. The systems should then be bled in accordance with the information given in Section G4m.

Printed in England

© Rolls-Royce Motors Limited 1979

February 1979

TSD 4200

Section G8m

Deceleration conscious pressure limiting valve

Introduction

The deceleration conscious pressure limiting valve is non-adjustable and should not require servicing.

If a valve is found to be faulty usually indicated by premature rear brake locking, the complete valve should be renewed.

Replacement seal kits are not available for this valve.

Under no circumstances should a complete valve assembly or seals for use with conventional brake fluid (i.e. RR 363) systems be fitted, as a replacement.

To enable the valve to be identified as a hydraulic system mineral oil component the body of the valve is coloured green and a green identification tab is fitted to the valve bleed screw.

Deceleration conscious pressure limiting valve - To remove

1. Place the car on a ramp and remove the undershield protecting the brake actuation linkage.
2. Depressurise the hydraulic systems as described in Section G2m.
3. Disconnect the two pipes from the pressure limiting valve; blank off the pipe ends and valve ports.
4. Remove the split pins and nuts from the two valve mounting bolts; withdraw the bolts and remove the valve and distance pieces.

On left-hand drive cars the angular end plate must be removed to enable the valve and distance pieces to be removed from the mounting bolts.

Deceleration conscious pressure limiting valve - To fit

To fit the pressure limiting valve reverse the procedure given for removal noting the following.

1. All nuts must be torque tightened in accordance with the figures quoted in Chapter P prior to the split pins being fitted.
2. On completion the hydraulic system must be bled as described in Section G4m.

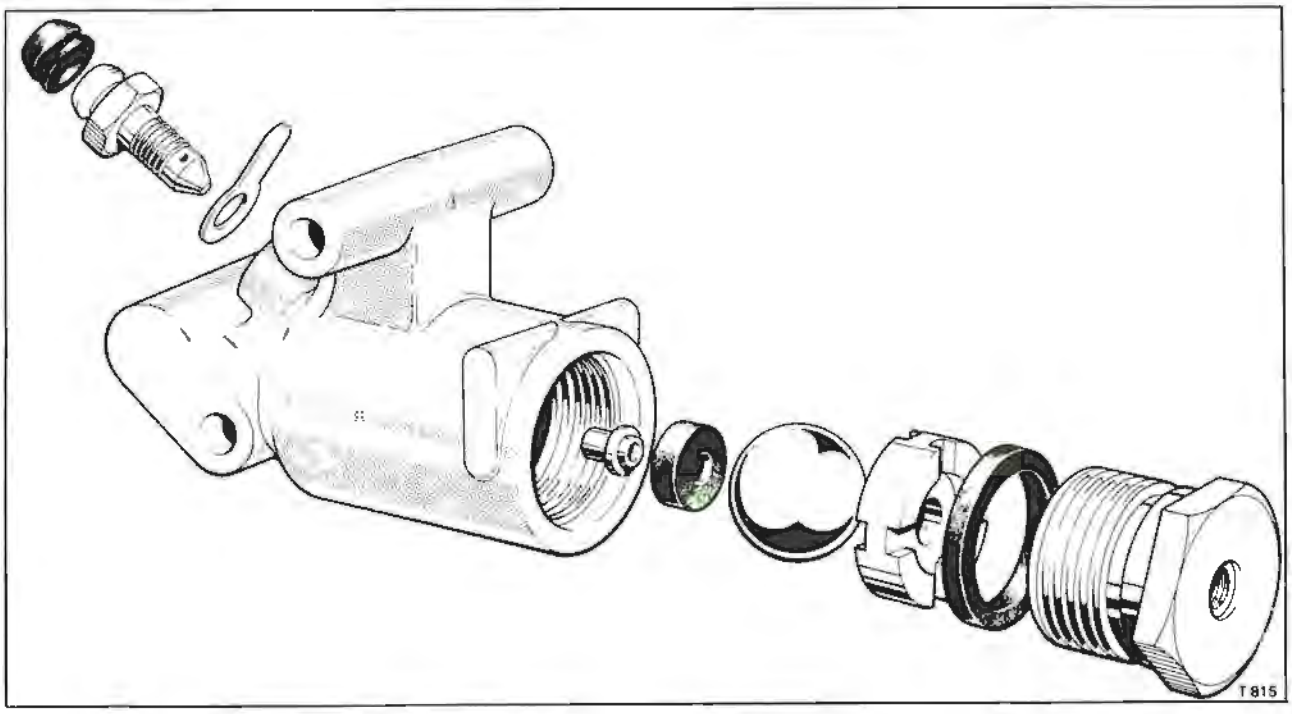

Fig. G15m Deceleration conscious pressure limiting valve

Printed in England

© Rolls-Royce Motors Limited 1979

Section G9m

Brake distribution valves

Printed in England

© Rolls-Royce Motors Limited 1979

Introduction

The brake distribution valves fitted to cars with mineral oil hydraulic systems are identical in appearance to those fitted to cars using conventional brake fluid (i.e. RR 363). In order to identify valves suitable for use with hydraulic system mineral oil the valve body and end plug are painted green.

Under no circumstances should distribution valves for use with a conventional brake fluid system be fitted as a replacement.

The distribution valves are situated one above the other within the brake actuation linkage assembly and are operated through linkage and a balance lever arrangement when the footbrake is applied (see Fig. G17m).

Both valves are identical in operation but have differing mounting points and pipe arrangements. Corresponding valves on right-hand and left-hand drive cars are identical.

Complete distribution valve assemblies are available as service exchange units. Only the rubber end cover, return spring and end plug sealing washer are available as seperate items. The remaining working parts are subject to very fine limits and are therefore selectively assembled by the manufacturer.

Note

The design of the valve is such that to provide adequate lubrication to the 0,0025 mm. (0.0001 in.) clearance between the operating valve and its bore, a small hydraulic system mineral oil 'leak-off' is permitted. This leakage is visable and takes the form of a small droplet of mineral oil hanging from the valve base. This is normal.

To determine if a valve is leaking excessively requiring renewal or overhaul, check that the 'leak-off' does not impair the braking efficiency of the car or cause a noticeable drop of hydraulic system mineral oil in the reservoir. If these conditions are satisfactory the valve should be regarded as serviceable.

Brake distribution valve - To test (on the car)

1. Place the car on a ramp. Isolate the gearchange selector and depressurise the systems as described in Section G2m.

2. Remove the undershield from around the brake actuation linkage.

3. Connect a zero kg/sq. cm. to 210 kg/sq. cm. (zero lb/sq. in. to 3 000 lb/sq. in.) pressure gauge with a length of high pressure pipe attached, into the high pressure outlet port of the distribution valve (blue or mauve pipe). Alternatively connect the gauge into any convenient junction between the valve and the brake calipers it supplies. The brake caliper bleed screw ports may be used if desired.

4. Start the engine then depress the brake pedal. The brake line pressure shown on the gauge should be proportional to the load applied to the pedal provided the accumulators are fully charged. For a 20,4 kg, (45 lb.) load on the pedal, the line pressure should be approximately 70,31 kg/sq. cm. (1 000 lb/sq. in.). It should also be possible to achieve a line pressure of 140,62 kg/sq. cm. (2 000 lb/sq. in.) for a pedal pressure of approximately 34,0 kg. (75 lb.).

When the brake pedal load is varied continuously, the brake line pressure should vary accordingly, without any marked lag or jerkiness.

If the above effort/pressures are not obtainable or actuation shows marked lag or jerkiness on the gauge, the distribution valve may be considered faulty and must be overhauled or renewed.

5. If a system internal leakage investigation, as described under Hydraulic accumulators - To test, show a distribution valve to be the cause of a loss in accumulator pressure the actual leakage can be checked as follows.

6. Disconnect the low pressure return line from the distribution valve port (black or white pipe). Blank the end of the pipe to prevent drainage of the reservoir.

7. Insert a union and a length of pipe into the distribution valve low pressure return port and place the open end of the pipe into a clean container.

8. Start the engine but do not depress the footbrake pedal.

9. Top-up the reservoir continuously to prevent the hydraulic system mineral oil from falling below the 'add' level mark.

For the valve to be acceptable the hydraulic system mineral oil leakage should not exceed 25 ml. per half hour with the valve in the 'off' position (i.e. brake pedal not applied) or 50 ml. per minute with the brake pedal depressed and held steady under a load of 20,41 kg. (45 lb.). This load is equevalent to a brake line pressure of 70,31 kg/sq. cm. (1 000 lb/sq. in.). If the valve leakage exceeds these figures it must be overhauled or renewed.

Brake distribution valves - To remove

1. Place the car on a ramp and depressurise the hydraulic systems as described in Section G2m.

2. Remove the undershield from around the brake

Febraury 1979

TSD 4200

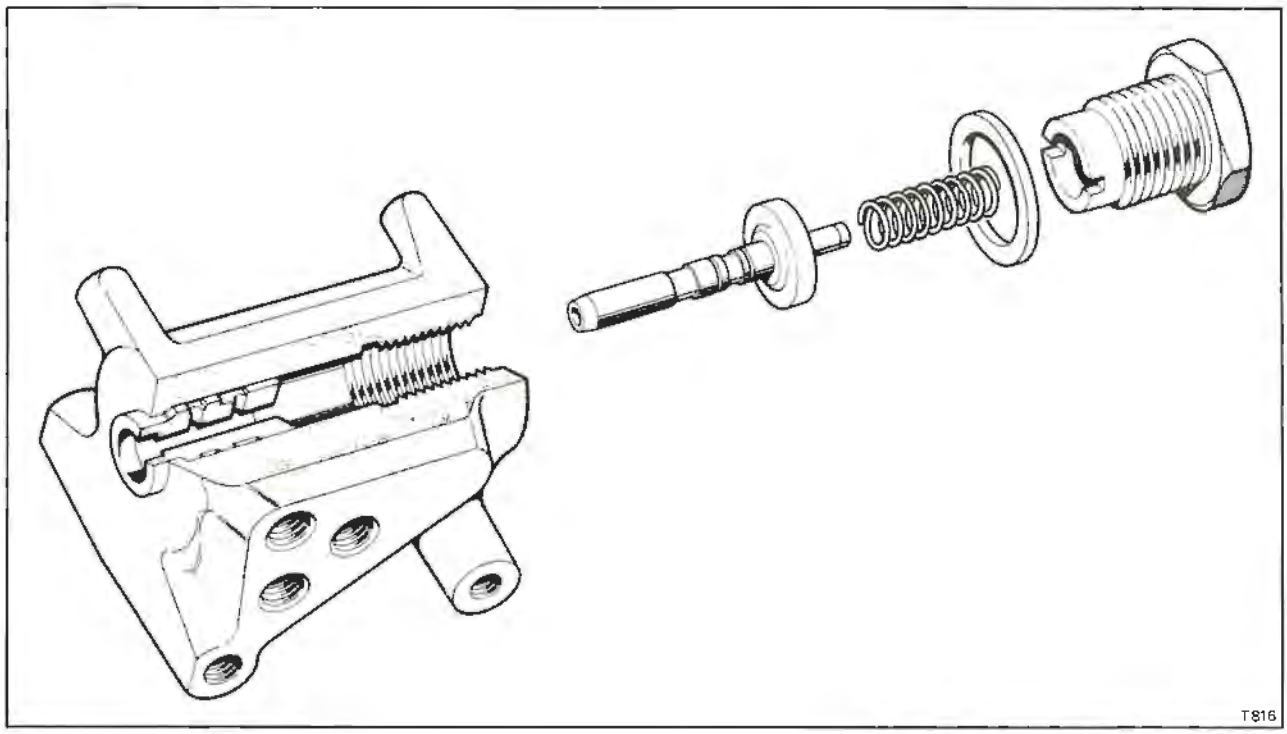

Fig. G16m Distribution valve

actuation linkage.
3. Remove the pipes from each valve. Blank off the pipe ends and valve ports.
4. Unlock and remove the securing bolts from each valve, drew the rubber boot seal off the valve. Taking care not to bend the valve actuation push rod, move each valve forward and downward, out of the actuation linkage assembly.

Brake distribution valve - To dismantle (see Fig. G16m)

1. Remove the end plug and sealing washer; collect the return spring.
2. Carefully remove the valve stem. Extreme care should be taken to ensure that the valve stem and its operating bore do not become scratched or damaged.
3. Carefully wash all parts in methylated spirits and dry with clean, dry compressed air.

Brake distribution valve - To inspect

1. Carefully examine the fine limit bore of the valve insert and the outside diameter of the valve stem. Each surface should be smooth and free from scratches.
2. Lubricate the bore of the valve insert and the valve stem with clean hydraulic system mineral oil. Carefully fit the valve stem into the valve insert bore and check for any axial wear. There should only be sufficient clearance to allow the valve stem to slide freely in the bore, the stem and bore having a clearance of 0,0025 mm. (0.0001 in.).
3. Wash the parts in methylated spirits and dry with clean dry compressed air.

Brake distribution valve - To assemble

1. Lubricate the bore of the valve insert and the valve stem with approved hydraulic system mineral oil (see Chapter D).
2. Carefully insert the valve stem into the valve insert bore until fully seated. Fit a new return spring.
3. Fit a new sealing washer to the end plug. Fit and torque tighten the plug to the figure quoted in Chapter P.
4. Ensure that the inward and return movement of the valve stem is smooth and does not bind or stick at any point along its travel.

Brake distribution valves -To fit

Fit the distribution valves by reversing the procedure given for removal noting the following points.
1. If a replacement valve is being fitted, remove one of the blanking plugs and allow any hydraulic system mineral oil to drain from the valve. Re-fit the plug.
2. Torque tighten the mounting bolts and pipe connections in accordance with the figures quoted in Chapter P. Lock the securing bolt tab washers.
3. On completion the hydraulic systems must be bled as described in Section G4m.

Printed in England
© Rolls-Royce Motors Limited 1979
February 1978
TSD 4200

Section G10m

Brake actuation linkage assembly

Introduction

The brake actuation linkage assembly is mounted just rearward of the toe-board. On right-hand drive cars the assembly is positioned just inboard of the body sill. On left-hand drive cars the assembly is fitted adjacent to the inner side of the body longeron.

The assembly houses the distribution valves, deceleration conscious pressure limiting valve and the stop lamp switch; the assembly being the same for both right and left-hand drive cars.

Always ensure that replacement distribution valves and pressure conscious deceleration valve fitted to this assembly are for use with hydraulic system mineral oil and bear the relevant identification markings (see Sections G8m and G9m).

Under no circumstances must valves for use with conventional brake fluid systems (i.e. RR 363) be used for replacements.

Brake actuation linkage assembly - To - remove

1. Place the car on a ramp; depressurise the hydraulic systems as described in Section G2m
2. Disconnect the battery.
3. Remove the undershield from around the linkage assembly.
4. Disconnect the Lucar connections, then remove the brake stop lamp switch and mounting bracket.

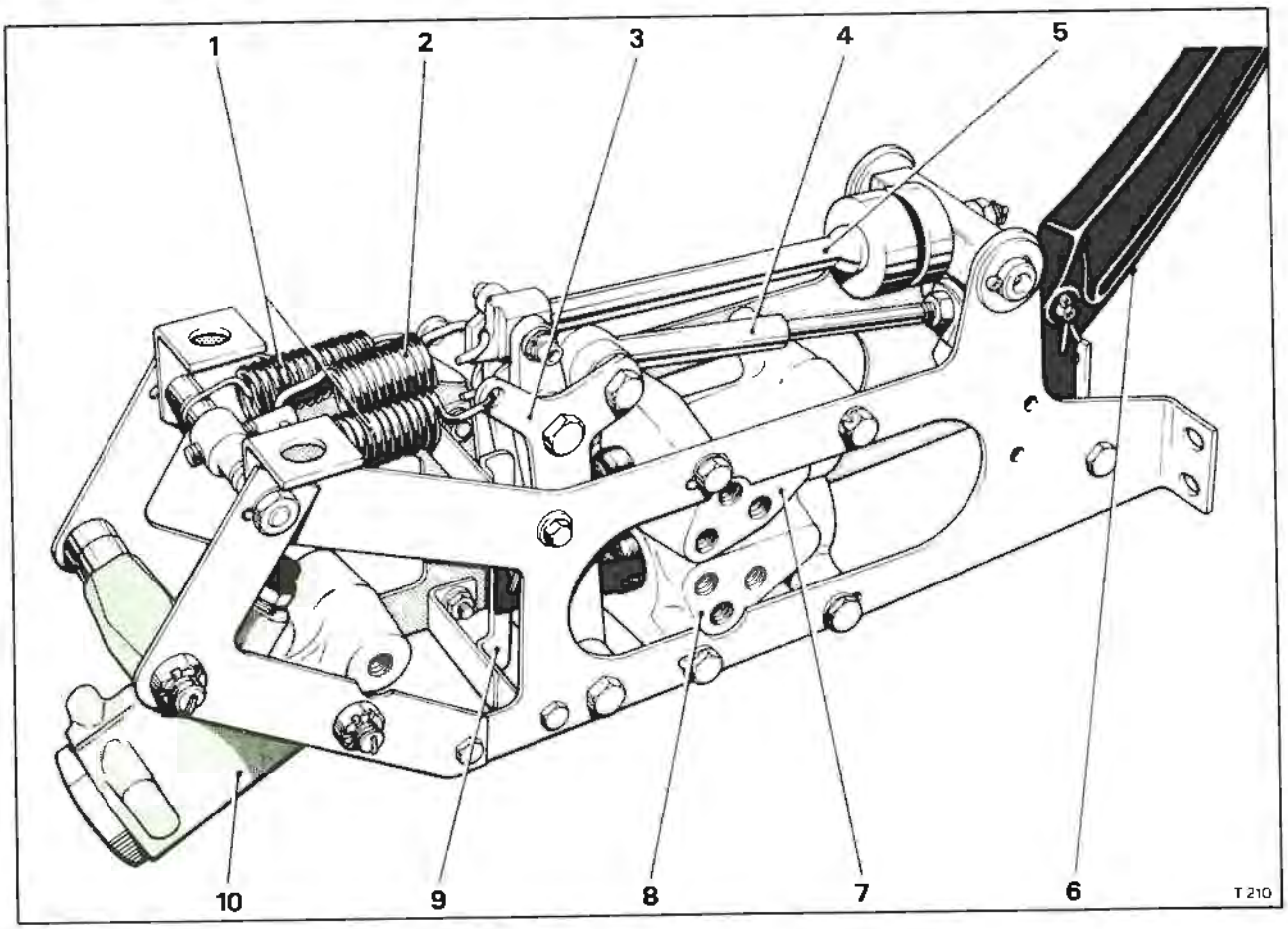

Fig. G17m Brake actuation linkage assembly

1 Return springs
2 Pedal 'feel' spring
3 Balance lever assembly
4 Brake actuation rod
5 Pedal 'feel' rod
6 Brake pedal lever
7 Upper distribution valve (No.1 system)
8 Lower distribution valve (No.2 system)
9 'Off' stop bracket
10 Deceleration conscious pressure limiting valve

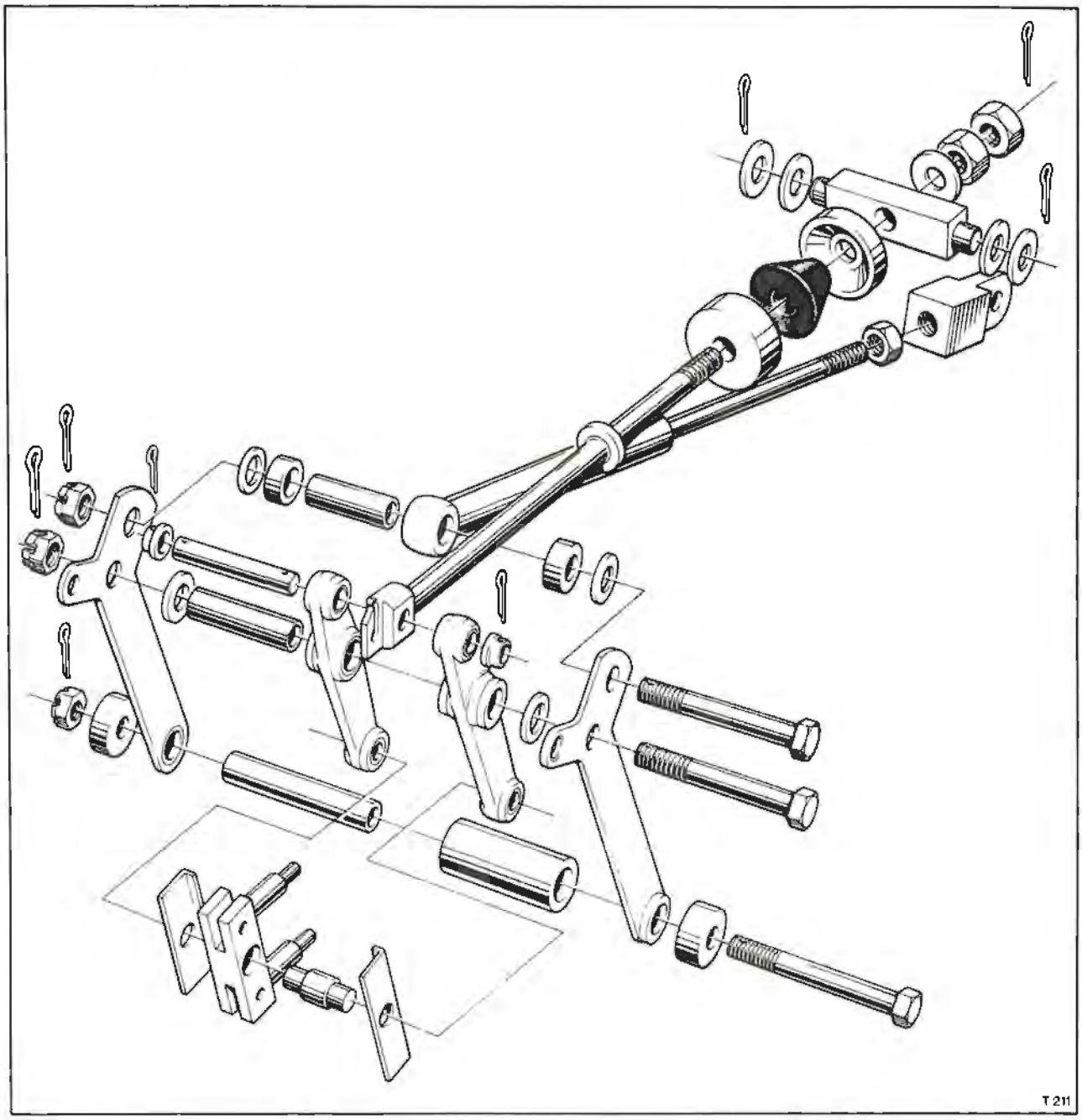

Fig. G18m Brake actuation linkage balance lever assembly

5. Remove the brake pedal pinch bolt from the upper end of the brake pedal lever and ease the pedal stem out of the lever. Collect the rubber seal.
6. Disconnect the pipes from the distribution valves and deceleration conscious pressure limiting valve. Blank off all exposed pipe ends and valve ports.
7. On right-hand drive cars disconnect the petrol pipe clip from the linkage side mounting bracket.
8. Remove the setscrews (right-hand drive cars) or bolts and nuts (left-hand drive cars) securing the linkage assembly side plates at the forward end. Support the linkage assembly and remove the two rear securing setscrews. Lower the assembly from the car.

On left-hand drive cars, the brake pedal lever must be withdrawn from the rubber sealing boot when lowering the actuation linkage from the car.

Important

Under no circumstances should the brake actuation assembly be allowed to hang from the brake pedal, supported by the actuation rod, as this may result in the rod being bent.

Brake actuation linkage - To dismantle

Prior to dismantling the linkage note should be taken of the relative positions of the distance pieces and bolt directions (see Figs. G17m and G18m).

1. Remove the brake actuation linkage from the car as described previously.
2. Remove the split pin and clevis pin from the operating rod pivot on the brake pedal lever.
3. Remove the three springs from the rear of the linkage.
4. Remove the split pin and nuts from the end of the pedal 'feel' rod.
5. Remove the 'off' stop bracket from behind the balance levers.
6. Remove the pivot bolt from the lower end of the balance levers. Ease the levers rearward and carefully withdraw the balance lever push rods from the distribution valves. Remove the distance pieces and pivot tube from the lower end of the balance levers.
7. Lift the levers clear of the side plates and withdraw the 'feel' rod from its retaining bar. Collect the conical rubber and abutment cups.
8. Remove the split pin from one side of the 'feel' rod pivot pin, withdraw the pin and collect the collar.
9. Remove the two bolts retaining the pivot arms to the balance levers. Noting their positions collect the washers, distance pieces and pivot tubes.
10. Remove the balance levers from each side of the distribution valve push rod equalising block, collect the pin retaining plates.

Note
The levers and pivot pins are clearance fits and are easily removed.

Brake linkage assembly bushes and pivot pins - To renew
1. Remove and dismantle the brake linkage as described previously.
2. Carefully press the bushes requiring renewal out of their locations and fit new bushes. The bush bores are machined to final size, therefore no reaming or boring is necessary.
3. Any pivot pins that are worn or damaged must be renewed.

Brake actuation linkage - To assemble
Assemble the linkage by reversing the dismantling procedure noting the following points.
1. Clean all components prior to assembly. Lightly lubricate the linkage pivots, the protruding parts of the distribution valve stems and the push rod location bores with Molytone 'C' grease.
2. All bolts and nuts must be torque tightened to the figures quoted in Chapter P before split pins are fitted and tab washers secured.
3. The linkage should operate freely when located between the assembly side mounting plates. All levers must be absolutely free to move with negligible friction on their pivots. Distance tubes must be similarly free in the Oilite bushes.

Note
All bolts should be fitted in the directions shown in Figure G17m in order that certain individual items may be removed without removing the complete assembly from the car.

Brake actuation linkage - To adjust
Adjustment of the actuation linkage should be carried out in the following sequence.
(a) Distribution valve push rod clearance.
(b) Rubber 'feel' cone setting.
(c) Main 'feel' spring setting.
(d) Brake pedal height setting.

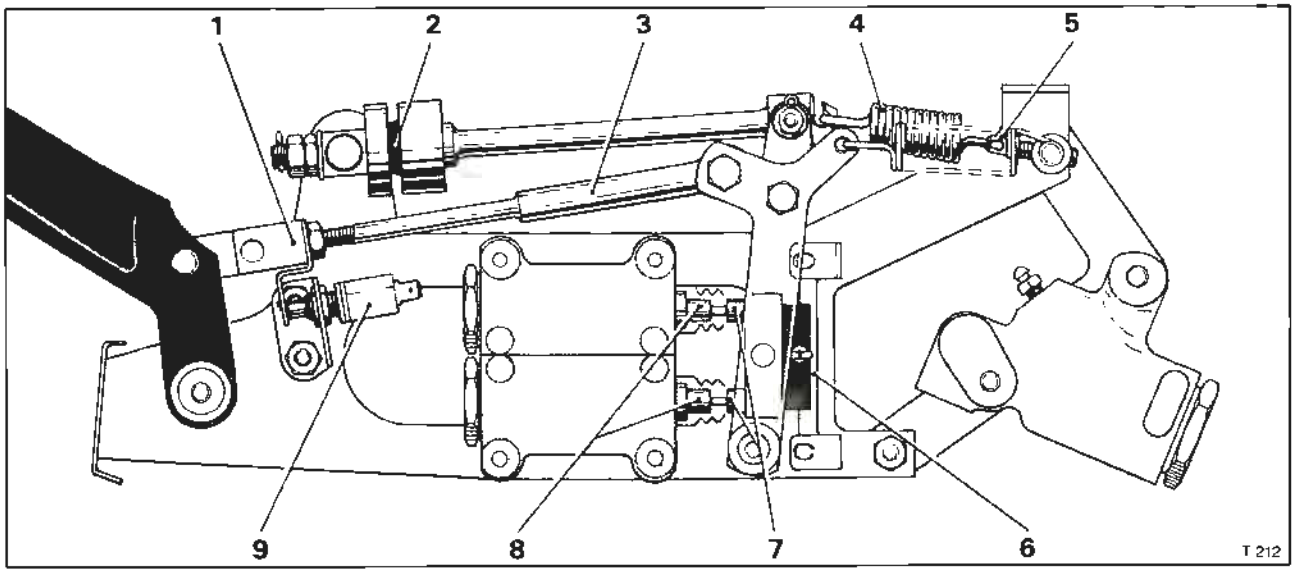

Fig. G19m Brake actuation linkage adjustment points
1 Brake pedal lever adjustment block
2 Rubber 'feel' cone
3 Brake actuation operating rod
4 Main 'feel' spring
5 Feel spring adjustment screw
6 Off stop bracket
7 Balance lever push rods
8 Distribution valve stems
9 Brake stop lamp switch

Printed in England
© Rolls-Royce Motors Limited 1979

Note
Adjustments 'a', 'b' and 'c' can be carried out with the actuation linkage assembly removed from the car.

Distribution valve push rods - To set (see Fig. G19m)
1. Slacken and unscrew the brake 'feel' rod adjusting nuts until clearance is obtained between the feel rod mounting block and the rubber cone seat.
2. Remove the 'feel' and return springs.
3. Slacken the four bolts securing the 'off' stop bracket to the actuatuion linkage side plate.
4. Slide the 'off' stop bracket forward on the elongated holes until a clearance of up to 0,254 mm. (0.010in.) is obtained between the balance lever push rods and the distribution valve stems; with no preload being applied to the valve stems. Ensure that the setting is equal on each valve, then tighten the bracket securing bolts.

Note
It will be necessary to draw back the two rubber dust covers on the distribution valves in order to check the push rod to distribution valve stem clearance.

Rubber 'feel' cone - To set (see Fig. G19m)
1. Fit the two return springs to the linkage assembly. At this point the two abutment cups and the rubber 'feel' cone should be loose and free to slide on the shaft.
2. Tighten the adjusting nut until the clearance between the abutment cups and the rubber cone has been removed, without a preload being applied to the rubber cone.
3. Securely tighten the lock-nut onto the adjusting nut, then depress and release the brake pedal several times to ensure that the cone is seated correctly. Recheck the cone setting. Ensure that a security split pin is fitted to the end of the shaft.

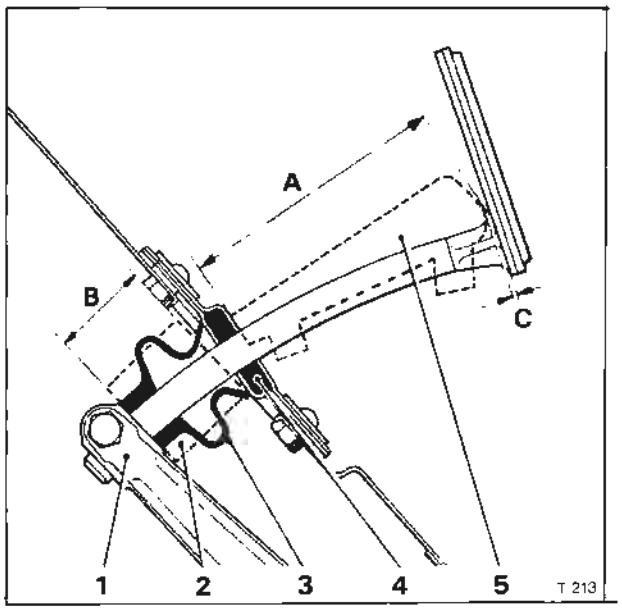

Fig. G20m Brake pedal height settings
1 Brake lever
2 Brake lever setting gauge
3 Rubber seal
4 Toe-board seal and housing
5 Pedal height checking template
A 99,06 mm. to 98,30 mm. (3.90 in. to 3.870 m.)
B 38,10 mm. to 37,97 mm. (1.50 in. to 1.495 in.)
C 0,38 mm. to 5,08 mm. (0.015 in. to 0.20 in.)

Main 'feel' spring - To set (see Fig. G19m)
1. Ensure that the actuation assembly remains in the 'off' position.
2. Fit one end of the 'feel' spring into the adjusting screw fitted in the centre of the spring anchor rod.
3. Rotate the spring and screw half a turn at a time in the direction required until the spring can be fitted into the 'feel' rod hook, with no clearance between the spring and hook, ensure that there is no spring preload.

Note
It is necessary to stretch the spring over the hook to obtain the correct position where clearance is determined.

4. Remove the spring from the hook and rotate the spring and screw 1½ turns clockwise, when viewed from the brake pedal end of the assembly (i.e. effectively tensioning the spring). Fit the spring onto the hook.

Note
It is essential to follow both of the previous setting instructions accurately as deviations will completely alter the subjective feel and acceptability of brake control.

Clearance between the rubber 'feel' cone and its abutments will cause a spongy, long travel pedal feel at low decelerations; any preload on this rubber will cause jerky initial braking under these conditions.

Inadequate preload on the rear tension spring will produce unwanted free travel at the pedal followed by jerky initial braking; too much preload on this spring will give jerky initial braking followed by a period of 'spongy' pedal travel.

Brake pedal height setting (see Figs. G20m and G21m)
This setting can only be carried out with the actuation linkage assembly fitted to the car.
1. Locate the setting gauge into the brake pedal stem hole in the end of the pedal lever (see Fig. G20m). Raise the pedal lever until the gauge touches the underside of the toe-board seal housing.
2. Adjust the block on the lever operating rod until the hole in the block aligns with the hole in the pedal lever.

Note
Shortening the rod length reduces the gap between the pedal lever and seal plate, half a revolution of

the block being equal to approximately 3,17mm. (0.125 in.) of pedal lever movement.
3. Remove the setting gauge from the brake lever. Connect the rod to the lever by inserting the clevis pin. Fit the split pin.
4. Fit the rubber seal between the brake pedal lever and toe-board seal plate.

On left-hand drive cars slide the convoluted rubber seal over and down the brake pedal lever; fit the two retaining screws and washers. Ensure that the seal does not prevent the lever and linkage returning to the fully 'off' position.
5. Insert the brake pedal through the toe-board felt and rubber seals into the hole in the brake pedal lever.
6. Fit and tighten the pinch bolt to secure the brake pedal lever.
7. Check that the rubber seal does not prevent the actuation linkage returning to the 'off' position and that the brake pedal does not foul the seal housing at any point along its travel.
8. Fit the brake stop lamp switch and adjust the setting as described under Brake stop lamp switch - To adjust.

Brake pedal height - To check
1. Place the checking template as shown in Figure G20m between the underside of the brake pedal and the upper surface of the pedal seal housing with the two lugs of the gauge located under the pedal stem. Rest the flat base of the template on the seal housing. Ensure that both carpet and underlay are removed from the housing surface.
2. If the clearance between the top of the template and the underside of the pedal is less than 0,38 mm. (0.015 in.) or more than 5,08 mm. (0.20 in.) adjust the length of the pedal lever rod as described in Brake pedal height setting.

Brake pedal lever - To remove
1. Place the car on a ramp and remove the undershield from around the brake actuation linkage.
2. Disconnect the battery.
3. Disconnect the Lucar connections and remove the stop lamp switch.
4. Remove the brake pedal stem pinch bolt from the top of the pedal lever and withdraw the stem out of the lever. Collect the rubber seal from the pedal stem.
5. Remove the split pin and clevis pin from the operating rod pivot on the pedal lever.
6. Remove the bolt and nut from the pedal lever pivot. Remove the lever and collect the pivot tube. On left-hand cars it is necessary to withdraw the lever from the convoluted rubber seal during final removal.

Brake pedal lever - To fit
To fit the brake pedal lever reverse the procedure given for removal noting the following points.
1. All nuts must be torque tightened to the figures quoted in Chapter P..
2. The pedal lever and the stop lamp switch must be checked for correct operation and adjusted if necessary as described under the appropriate headings in this section.

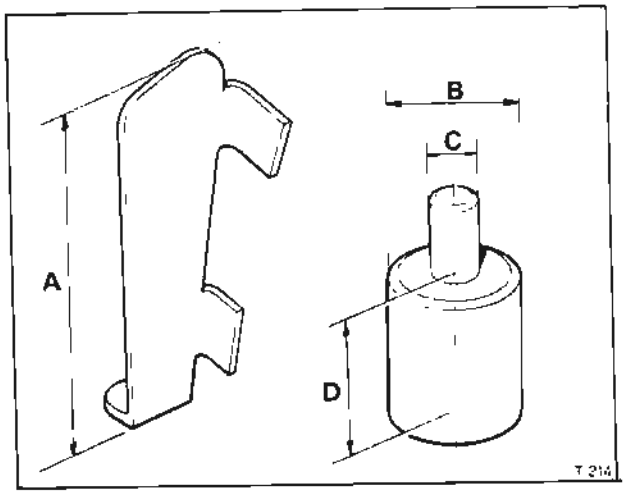

Fig. G21m Brake pedal setting gauge and checking template
- **A** 99,06 mm. to 98,30 mm. (3.90 in. to 3.870 in.)
- **B** 34,92 mm. to 34,29 mm. (1.375 in. to 1.350 in.)
- **C** 12,50 mm. to 12,44 mm. (0.492 in. to 0.490 in.)
- **D** 38,10 mm. to 37,97 mm. (1.50 in. to 1.495 in.)

Brake stop lamp switch - To adjust
With all other adjustments to the brake actuation linkage and brake pedal completed, set the brake stop lamp switch as follows.
1. Slacken the nuts retaining the stop lamp switch to the switch mounting bracket.
2. Switch on the ignition.
3. Adjust the switch position until the stop lamps are illuminated during the initial movement of the footbrake pedal; between 3,2 mm. and 9,5 mm. (0.125 in. and 0.375 in.) of brake travel.
4. Tighten the retaining nuts and again check the stop lamps for operation.
5. Switch off the ignition.

Printed in England
© Rolls-Royce Motors Limited 1979
February 1979
TSD 4200

Section G11m

Priority valves

Printed in England
© Rolls-Royce Motors Limited 1979

Introduction

The priority valves are mounted on the underside of the body, between the rear seat heel board and the rear suspension crossmember.

A priority valve is incorporated into the supply line to each height control valve. The function of this valve is to prevent the flow of hydraulic system mineral oil to the height control valves until a pressure of between 71 kg/sq.cm.and 92 kg/sq.cm. (1 015 lb/sq.in. and 1 305 lb/sq.in.) is attained in the accumulators. This flow prevention ensures there is sufficient pressure in the hydraulic systems to operate the height control mechanism without jeopardising the braking efficiency of the car.

If the pressure in the hydraulic system(s) falls unduly while the engine is running, the priority valve(s) will close and isolate the suspension height control mechanism. The reduced hydraulic pressure is then totally utilised for braking purposes.

The priority valves are non-serviceable units therefore, in the event of valve malfunction the complete valve assembly must be renewed.

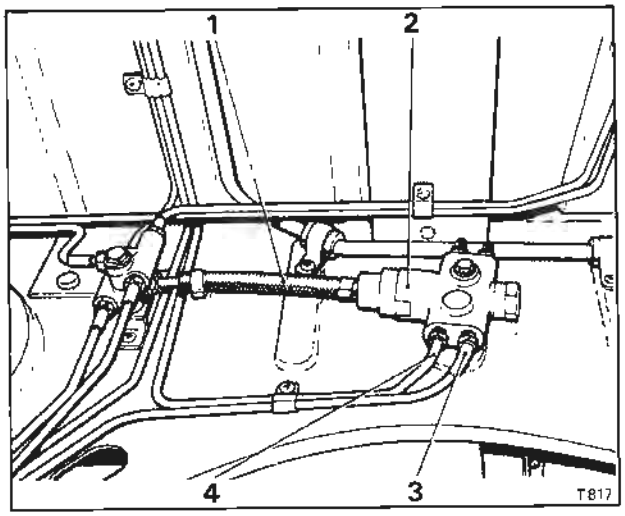

Fig. G22m Priority valve (Right-hand shown)
1 Valve seepage return pipe
2 Priority valve (No.1 system)
3 Inlet pipe from accumulator
4 Outlet pipe to height control valve

Priority Valve - To remove (see Fig. G22m)

1. Depressurise the hydraulic systems as described in Section G2m.
2. Disconnect the seepage return hose from the three way connector.
3. Disconnect the two high pressure pipes from the valve and discard the rubber end seal from each pipe.
4. Unscrew the valve retaining setscrew and remove the valve.
5. Remove the sepage pipe from the valve.

Priority valve - To fit

1. Push the sepage pipe onto the stub pipe at the top of the valve. Fit a new retaining clip and secure it in position using crimping pliers.
2. Fit new rubber end seals to the two high pressure pipes and connect the pipes to the valve ports.

Note

Reference should be made to Section G3m before fitting this type of pipe connection.

3. Fit and torque tighten the valve retaining set-screw to the figures quoted in Chapter P.

Priority valve - To test

1. Depressurise the hydraulic systems as described in Section G2m.
2. Remove the pressure switch from the hydraulic system, relevant to the priority valve being tested. Connect a zero kg/sq.cm. to 210 kg/sq.cm. (zero lb/sq.in. to 3 000 lb/sq.in.) pressure gauge into the pressure switch adapter.
3. Add weight to the luggage compartment of the car equal to 140 kg (300 lb).
4. Start and run the engine at approximately 1000 rpm.
5. Note the pressure registered on the pressure gauge at the point where the car commences to level. This pressure should not exceed 91,35 kg/sq. cm. (1 305 lb/sq.in.).
6. Switch off the ignition.
7. Attach bleed pipes to the rear suspension strut bleed screws. Carefully open the bleed screws. Allow the hydraulic system mineral oil to flow into a clean container until the levelling system is fully exhausted,indicating that the priority valve has closed.
8. The pressure retained in the braking system and registered on the pressure gauge with the priority valve closed must not be less than 71,05 kg/sq.cm. (1 015 lb/sq.in.).
9. If the valve operating pressures are not within the above limits the priority valve must be renewed.
10. After the tests have been completed top-up the reservoirs to the correct levels with clean recommended hydraulic system mineral oil (see Chapter D).

Section G12m

Height control valves

Introduction

The height control valves are mounted on the underside of the car body adjacent to each rear suspension spring. Actuation of the valves is controlled by pivoting links attached to each trailing arm. Both valves are identical.

The height control valves regulate the flow of hydraulic system mineral oil either to or from the rear suspension struts, dependant on the variation in load applied to the rear suspension. Any sustained change in the suspension height of the car operates the valves. Under extra load conditions (i.e. car standing height is low) pressurised hydraulic system mineral oil is allowed to pass from the accumulator, through the height control valves to the rear suspension struts. When the car load is reduced (i.e. car standing height is high), the height control valves allow hydraulic system mineral oil to return from the rear suspension struts to the respective system reservoirs.

The height control valves are non-serviceable units, therefore, in the event of valve malfunction the complete valve assembly must be renewed.

In order to obtain the correct standing height of the car reference should be made to Section H4m. Any error in standing height cannot be corrected by adjustment of the height control valve actuation links.

When work is being carried out on the levelling system of the car it should be noted that the height control valves are designed to give a delay of between 15 and 30 seconds before they respond to movement of the operating lever.

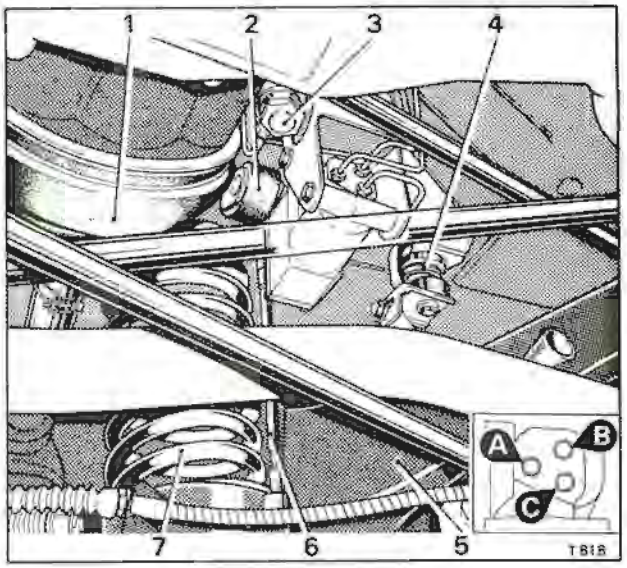

Fig. G23m Height control valve (left-hand shown)

1 Axle half-shaft
2 Height control valve
3 Minimum pressure valve
4 Exhaust mount
5 Trailing arm
6 Height control valve actuation link
7 Rear suspension coil spring
A Return to reservoir
B Inlet from priority valve
C Outlet to minimum pressure valve

Height control valve - To remove (see Fig. G23m)

1. Place the car on a ramp and depressurise the hydraulic system as described in Section G2m.
2. Disconnect the valve actuation link from the trailing arm.
3. Remove the three pipe connections from the valve assembly; fit blanks to the pipe ends and valve ports.
4. Remove the valve mounting bolts and lower the valve from its mounting bracket.
5. Remove the valve actuation link from the operating arm.

Height control valve - To fit

Fit the height control valve by reversing the procedure for removal noting the following points.

1. Before connecting the valve actuation link to the trailing arm, the standing height of the car must be checked as described in Section H4m and the actuation link adjusted as described under Height control valve - To set.

Note

Corrections to the car standing height cannot be made by adjustment of the actuation link.

2. All setscrews and pipe connections should be torque tightened in accordance with the figures quoted in Chapter P.
3. After fitting a height control valve the hydraulic system must be bled as described in Section G4m.

Height control valve - To set

1. Using jacks and sill blocks located under the sills of the car adjust the front and rear car standing height to the dimensions given in Chapter H Part II.

Note

In order to retain the car on the jacks and sill blocks, ballast weights should be applied to the luggage compartment and interior of the car.

Printed in England
© Rolls-Royce Motors Limited 1979
October 1979
TSD 4200

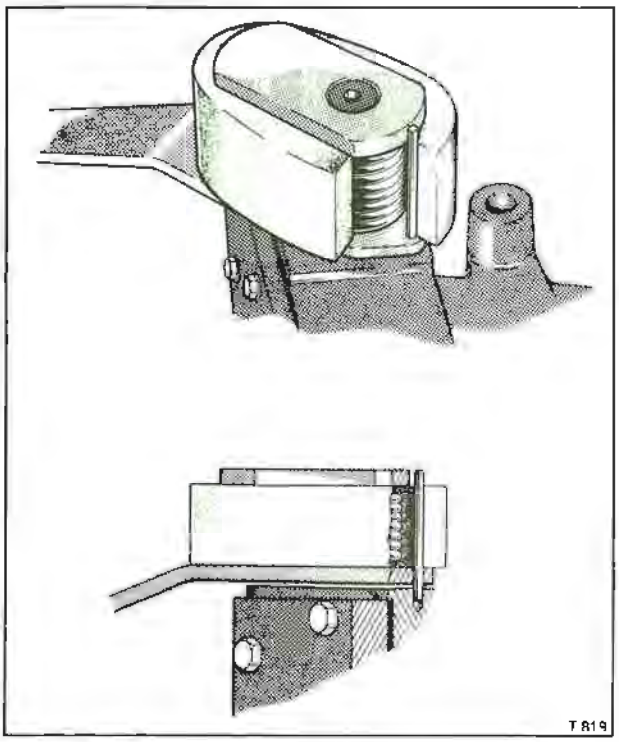

Fig. G24m Height control valve actuation arm location pin

2. Fit the operating arm location pin into position on the height control valve (see Fig. G24m).
3. With the car standing height correct, adjust the operating arm actuation link until the ends can be located onto the ball pins on the operating arm and suspension trailing arm. Lubricate the joints with Rocol MTS 1000 grease or equivalent. Adjust the joints to give complete freedom of movement without free play.
4. Remove the location pin from the height control valve operating arm

Failure to remove the location pin will result in severe damage to the height control valve when suspension movement occurs.

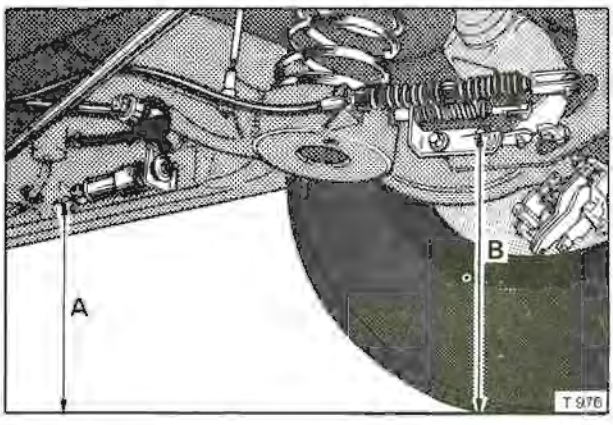

Fig. G25m Levelled height setting measurement positions

5. Remove the ballast weights, jacks and sill blocks.
6. If any hydraulic pipes have been disconnected bleed the hydraulic system as described in Section G4m.

Levelled height - To check

Before any attempt is made to check the levelled height it is important that the car standing height is correct. For details of the setting procedure reference should be made to Chapter H Part II.

1. With the car at the correct standing height, adjust the height control valve actuation arm links as described under Height control valve - To set.
2. Weight the front compartment of the car with two occupants or weights to a total of approximately 140 kg. (300 lb.) equally disposed between the two front seats. The fuel tank should contain 45 litres (10 Imp. gal. 12 U.S. gal.) of fuel. All accessories, spare wheel and tools must be fitted in their respective positions.
3. Add additional weights to the luggage compartment of the car equal to 230 kg. (500 lb.). Unlike the standing height checking operations, the weight must remain in the luggage compartment throughout the levelled height checking operations.
4. Ensure the gear change selector is in the 'P' park position then remove the thermal cut-out from the fuseboard. Start the engine and allow the car to attain its levelled height position.
5. Measure the levelled height. The levelled height measurements are taken at the same points on the car as those for the rear standing height (see Fig. G25m). Calculate the levelled height by measuring the height 'A' from the level surface on which the car stands to the centre of the foremost bolt attaching the rear sub-frame mounting bracket to the body sill. Measure height 'B' from the level surface to the centre of the rearmost bolt attaching the parking brake linkage to the trailing arm. For the levelled height to be correct the dimension 'A' should be within a tolerance of between plus 6,35 mm. and minus 11,43 mm. (plus 0.250in. and minus 0.450in.) of the dimension at point 'B'. If the height of the car is outside of these tolerances the height control valve should be renewed.

On Corniche cars destined for U.S.A. and Canada, the additional spacers fitted to the rear suspension springs must be taken into account when calculating the levelled height. On these cars 15,24 mm. (0.60.) must be added to the dimension taken at 'B' prior to the comparison of 'A' and 'B' being made.

The above limits allow for a tolerance on the height control valve neutral position, therefore the length of the actuatuion arm link of the valve should.not be adjusted.

Section G13m

Minimum pressure valve

Introduction

The minimum pressure valves are incorporated into the hydraulic systems between the height control valves and the suspension struts. Each valve is mounted behind its respective height control valve.

The purpose of the valves is to retain a pre-determined hydraulic pressure in the suspension struts.

During normal system operation, the minimum pressure valve is held in the open position by hydraulic system pressure and the flow of hydraulic system mineral oil between the height control valve and suspension strut is uninterrupted.

If however the hydraulic pressure supply to the suspension strut falls below 21 kg/sq.cm. (300 lb/sq.in.) the minimum pressure valve will close and isolate the suspension struts from the system.

The minimum pressure valves are non-serviceable items, therefore, in the event of a valve malfunction the complete valve assembly must be renewed.

Minimum pressure valve - To renew (see Fig. G26m.)

1. Place the car on a ramp and depressurise the hydraulic system as described in Section G2m.

2. Disconnect the pipe connections from the valve; fit blanks to all pipe ends and valve ports.

3. Remove the valve mounting bolts. Remove the valve from the car.

4. Fit a new minimum pressure valve by reversing the procedure for removal.

5. Torque tighten all bolts and pipe connections to the figures quoted in Chapter P.

6. Bleed the hydraulic system as described in Section G4m.

Minimum pressure valves - To test

1. Depressurise the hydraulic system as described in Section G2m.

2. Remove the suspension strut bleed screws. Connect a zero kg/sq.cm. to 210 kg/sq.cm. (zero lb/sq.in. to 3 000 lb/sq.in.) pressure gauge into both bleed screw adapters.

Note

Although zero kg/sq.cm. to 210 kg/sq.cm. (zero lb/sq.in. to 3 000 lb/sq.in.) gauges are quoted, it is essential that they give a correct reading in the 7 kg/sq.cm. to 28 kg/sq.cm. (100 lb/sq.in. to 400 lb/sq.in.) range. If gauge protection valves are used zero kg/sq.cm. to 70 kg/sq.cm. (zero lb/sq.in. to 1 000 lb/sq.in.) are preferred.

3. Ensure the front and rear standing height of the car are correct as described in Chapter H Part II Section H4m.

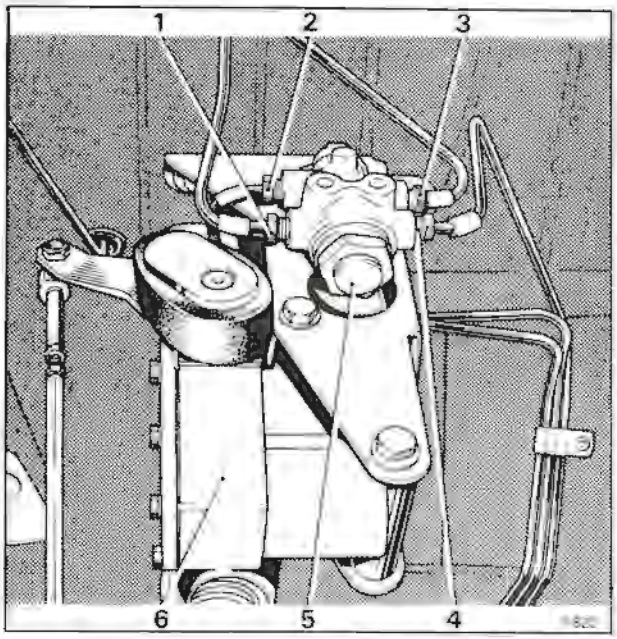

Fig. G26m Minimum pressure valve

1 Seepage return pipe from suspension strut
2 Supply pipe from height control valve
3 Supply pipe to suspension strut
4 Seepage return pipe to reservoir
5 Minimum pressure valve
6 Height control valve

4. Weight the front compartment with two occupants or weights of approximately 140 kg. (300lb.) equally disposed between the two front seats. The fuel tank should contain 45 litres (10 Imp. gal. 12 U.S. gal.) of fuel. All accessories, spare wheel and tools should be in their respective positions.

5. Ensure the gearchange selector is in 'P' park position and the gearchange thermal cut-out is removed from the fuseboard. Start the engine.

6. Add an additional 230 kg. (500 lb.) of load to the luggage compartment of the car. Allow the car to level (approximately 30 seconds).

7. Gradually remove the additional weight from the luggage compartment and allow the levelling system to exhaust.

8. Disconnect the height control valve actuation links from the trailing arms. Pull the actuation arms slowly downward approximately 25,4 mm. (1.0 in.) to ensure the systems are completely exhausted.

Printed in England
© Rolls-Royce Motors Limited 1979
February 1979
TSD 4200

Note
It is important to exhaust the height control valves slowly when checking the minimum pressure valve setting, otherwise an inconsistant pressure reading will result.

9. With the height control systems exhausted, the minimum pressure valves should retain a pressure of of between 21 kg/sq.cm. and 24,5 kg/sq.cm. (300 lb/sq.in. and 350 lb/sq.in.) in the suspension struts. The actual retained pressure will be registered on the pressure gauges inserted at the bleed connections. Should the retained pressure be outside the above limits the faulty valve(s) should be renewed.

Printed in England

© Rolls-Royce Motors Limited 1979

February 1979

TSD 4200

Section G14m

Gas springs and Suspension struts

Introduction

The rear suspension struts are mounted between the rear of each suspension trailing arm and the car body and are situated beneath each rear wheel arch. A gas spring is bolted to the top of each strut.

With the exception of Corniche Convertible cars the gas springs and top mounting of the suspension struts are situated in the luggage compartment of the car.

On Corniche Convertible cars access to the gas spring and upper mount of the strut is in the hood storage compartment.

The gas spring and suspension strut combine to perform the functions of car height levelling and suspension damper. The suspension strut is similar in design to a conventional damper but is supplied with pressurised mineral oil from its respective hydraulic system accumulator. The gas spring consists of a sphere similar to that fitted to the hydraulic accumulator devided into two chambers by a rubber diaphragm. Nitrogen gas at a pressure of 14,21 kg/sq.cm. (203 lb/sq.in.) is applied and retained on one side of the diaphragm. Mineral oil fills the other half of the sphere and the suspension struts.

When the road wheel hits a bump the piston of the suspension strut is forced upwards. This action forces mineral oil into the gas spring sphere compressing the gas behind the diaphragm. Conversely when the road wheel travels over a hollow the piston is forced down by the expansion of the gas.

Holes machined into the suspension strut piston allow a restricted mineral oil flow from one side of the piston to the other thus acting as a shock damper

Height control is achieved by increasing or decreasing the amount of mineral oil in the suspension strut and gas spring assembly. If extra load is applied to the car the height control valves will actuate and allow extra mineral oil to flow into the suspension strut. This increase in the volume of mineral oil, within the suspension strut, forces the piston down, effectively raising the body height of the car to the correct levelled height position. When load is removed from the car, the height control valve is actuated in the opposite direction, allowing the excess mineral oil to exhaust from the suspension strut to the respective reservoir, thus lowering the height of the car body.

Gas spring spheres and suspension struts are both non-serviceable items, therefore in the event of failure a new component must be fitted.

No attempt should be made to charge a gas spring sphere. All spheres are charged to the correct pressure prior to despatch from the manufacturer.

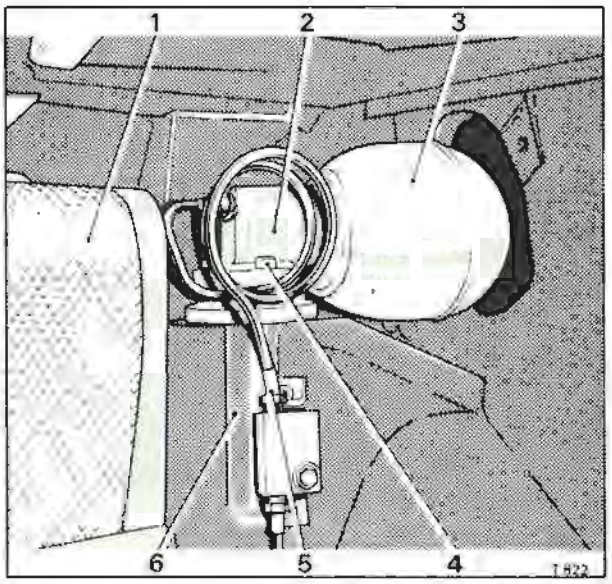

Fig. G27m Gas spring sphere

1 Fuel tank
2 Adapter
3 Sphere
4 Mounting setscrew
5 Pressure supply pipe
6 Car body strut tower

Note

Although zero kg/sq.cm. to 210 kg/sq.cm. (zero lb/sq.in. to 3 000 lb/sq.in.) pressure gauges are quoted for the testing of the gas spring sphere and suspension strut in this section it is essential that the gauges give correct readings in the 7 kg/sq.cm. to 28 kg/sq.cm. (100 lb/sq.in. to 400 lb/sq.in.) range. If gauge protection valves are used zero kg/sq.cm. to 70 kg/sq.cm. (zero lb/sq.in. to 1 000 lb/sq.in.) are preferable.

Gas spring sphere - To remove (see Fig G27m)

1. Depressurise the hydraulic system as described in Section G2m.

2. Cars other than Corniche Convertible

Remove the screws retaining the sealing panel at the forward end of the luggage compartment. Remove the panel to expose the fuel tank and gas spring spheres.

Corniche Convertible

Remove the rear seat cushions, backrest and trims (see Chapter S) to expose the gas spring sphere at the rear of the hood storage compartment.

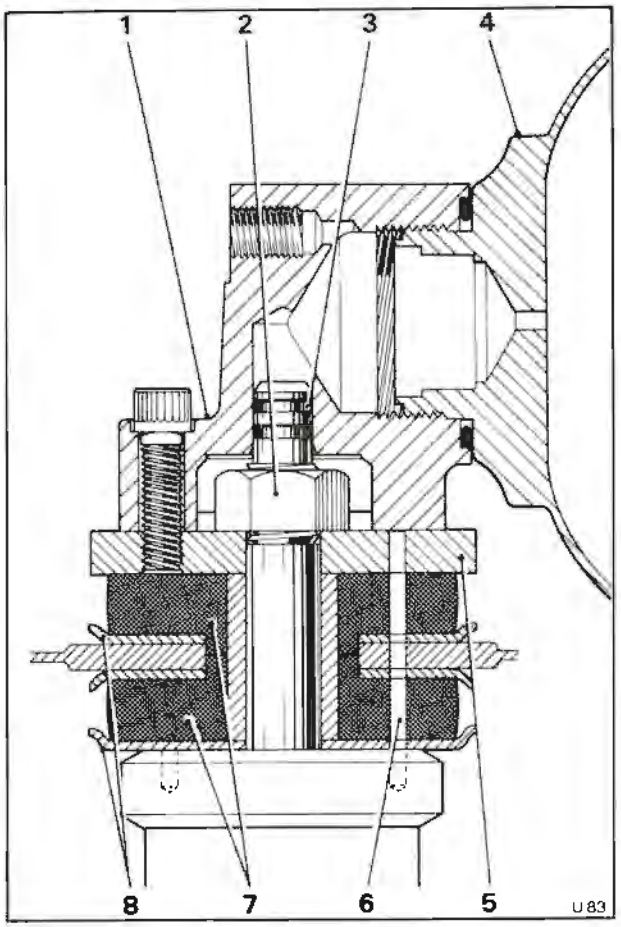

Fig. G28m Gas spring to suspension strut mounting

1 Adapter
2 Strut retaining nut
3 Sealing rings
4 Gas spring sphere
5 Gas spring mounting plate
6 Location peg holes
7 Rubber mounts
8 Cupwasher

3. Disconnect the coiled feed pipe from the gas spring, blank off the pipe and port.
4. Remove the three Allen screws from the gas spring adapter.
5. Carefully lift the adapter and sphere off the top of the suspension strut and remove it from the car. Discard the sealing rings.
6. Secure the sphere adapter in a soft-jawed vice and using a suitable strap spanner, unscrew the sphere from the adapter. Discard the sealing ring.

Gas spring sphere - To fit (see Fig. G28m)
Fit the sphere by reversing the procedure for removal noting the following points.
1. Ensure that the components are absolutely clean and free from burrs before assembly.
2. Lubricate the new sealing rings with clean hydraulic system mineral oil.
3. If a replacement sphere is being fitted, remove the blanking cover and allow any hydraulic system mineral oil to drain from the sphere.
4. Torque tighten all setscrew and pipe connections in accordance with the figures quoted in Chapter P.
5. On completion bleed the hydraulic system as described in Section G4m. Check all disturbed joints and pipe connections for leaks.
6. Fit the luggage compartment (other than Convertible cars) or interior trim (Convertible cars) as described in Chapter S.

Suspension strut - To remove
1. Place the car on a ramp and securely chock the front wheels.
2. Depressurise the hydraulic system as described in Section G2m.
3. Raise the rear of the car and place sill blocks under the rear end of the body sills. Support the trailing arms; do not allow the suspension rebound struts to support the full suspension load.
4. Remove the relevant rear wheel trim and the rear wheel.
5. Remove the gas spring sphere as described under Gas spring sphere - To remove. Fit a protective blank to the top of the strut.
6. Disconnect the seepage return pipe from the lower end of the suspension strut. Blank off the port and pipe connections.
7. Remove the retaining nut from the upper suspension strut mount. Collect the rubber mounting bush, gas spring mount and cup washer.
Note
In order to prevent rotation of the strut during removal of the retaining nut the location pin should be inserted through the mount. For details refer to suspension strut - To fit.
8. Remove the self-locking nut from the lower end of the suspension strut situated at the rear of the suspension trailing arm. Collect the rubber mounting bush and cup washer.
9. Support the suspension strut, then carefully push the piston rod fully into the strut. Lower the suspension strut from beneath the car taking care not to damage the gas spring connection stem. Collect the rubber mounts, distance pieces and cup washers.
Note
When pushing the piston rod into the suspension strut care should be taken to ensure that any mineral oil remaining in the strut is not forced from the gas spring connection stem.

Suspension strut - To fit (see Fig. G30m)
In order to correctly locate the suspension strut into position location holes are situated in the top face of the suspension strut and mount components. These location holes can be aligned using a 76,20 mm. (3.0in.) length of 4,75 mm. (0.187in.) bar. The location peg can be fitted to either of two

diametrically opposed holes in the strut, dependant on which side of the car the suspension strut is to be fitted. When positioned correctly the seepage drain unions should point rearwards on both sides of the car. Fit the suspension strut by reversing the procedure for removal noting the following points.

1. Fully compress the suspension strut; retain the piston rod in this position with a suitable piece of wire or rubber band attached to the drain union.
2. Fit the upper strut mount, distance piece, cup washers and locating peg into position on the strut stem.
3. Pass the strut stem through the hole in the body strut tower using the peg to locate its angular position i.e. drain union to the rear of the car.
4. Fit the cup washer, rubber mount and gas spring mount onto the strut stem and location pin. Fit and torque tighten the stem nut to the figures quoted in Chapter P.
5. Remove the location pin
6. Connect the strut piston rod to the trailing arm using a new self-locking nut.
7. Remove the protective cap from the strut stem. Lubricate the two stem sealing rings with hydraulic system mineral oil prior to fitting to the strut stem.
8. Fit the gas spring sphere assembly onto the strut stem mount, taking care not to damage the sealing rings (see Gas spring sphere - To fit).
9. All nuts, setscrews and pipe connections should be torque tightened in accordance with the figures quoted in Chapter P.
10. On completion, bleed the hydraulic system as described in Section G4m.
11. Check the levelled height of the car as described in Section G12m.

Gas spring and suspension strut operating pressures - To check

To ensure the levelling system operating pressures are within the correct operating range it is essential to check the system pressures whenever a mal-function of the levelling system or ride deterioration is suspected.

1. Check the car front standing height as described in Chapter H Part II Section H4m and correct if necessary.
2. Depressurise the hydraulic system as described in Section G2m.
3. Remove the suspension strut bleed screws and connect a zero kg/sq.cm. to 210 kg/sq.cm. (zero lb/sq.in. to 3 000 lb/sq.in.) pressure gauge into each bleed screw adapter.
4. Weight the front compartment of the car with two occupants or weight of approximately 140 kg. (300 lb.) equally disposed between the front seats. The fuel tank should contain 45 litres (10 Imp.gal. 12 U.S. gal.) of fuel. All accessories, spare wheel and tools must be fitted in their respective locations.
5. Ensure the gearchange selector is in the 'P' park position then remove the gearchange thermal cut-out from the fuseboard.

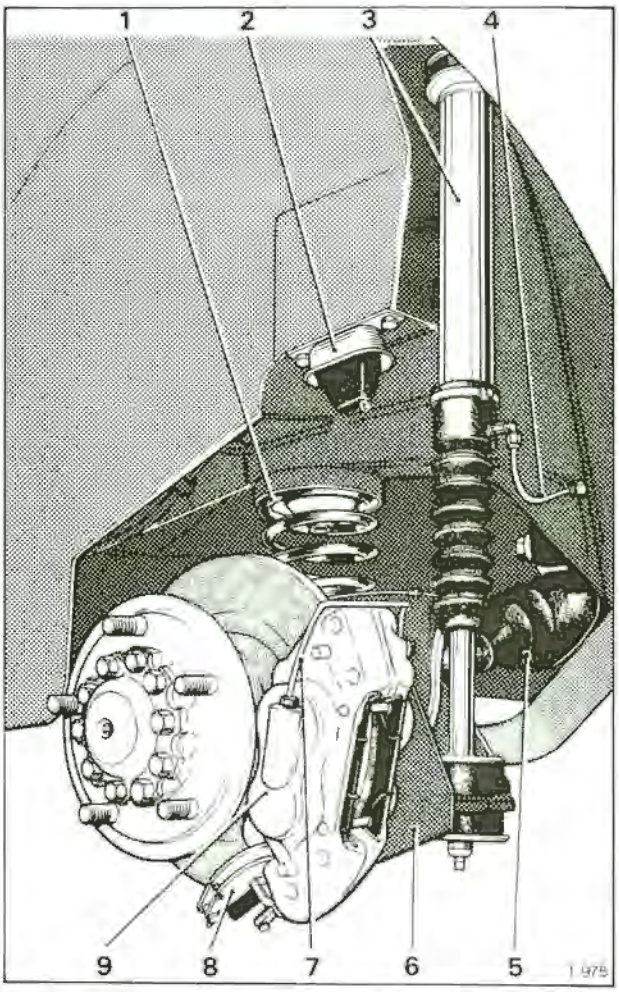

Fig. G29m Rear suspension strut

1 Rear suspension spring
2 Bump stop
3 Suspension strut
4 Seepage return pipe
5 Half-shaft
6 Trailing arm
7 Caliper bridge pipe
8 Parking brake caliper
9 Brake caliper

6. Start the engine and allow the systems to fully pressurise.
7. Place additional weights to a value of 230 kg. (500 lb.) into the luggage compartment of the car; allow the car to level (approximately 30 seconds).
8. Remove the weight from the luggage compartment of the car. Allow sufficient time for the car to level again. Check the pressure gauge readings and the rear standing height of the car. Check the standing height by measuring the height 'A' (see Fig. G25m) from the level surface on which the car stands, to the centre of the foremost bolt attaching the rear-frame mounting bracket to the body sill. Measure height 'B' from the level surface to the centre of the rearmost bolt attaching the parking brake linkage to the trailing arm. For the standing height to be

Printed in England
© Rolls-Royce Motors Limited 1979
February 1979
TSD 4200

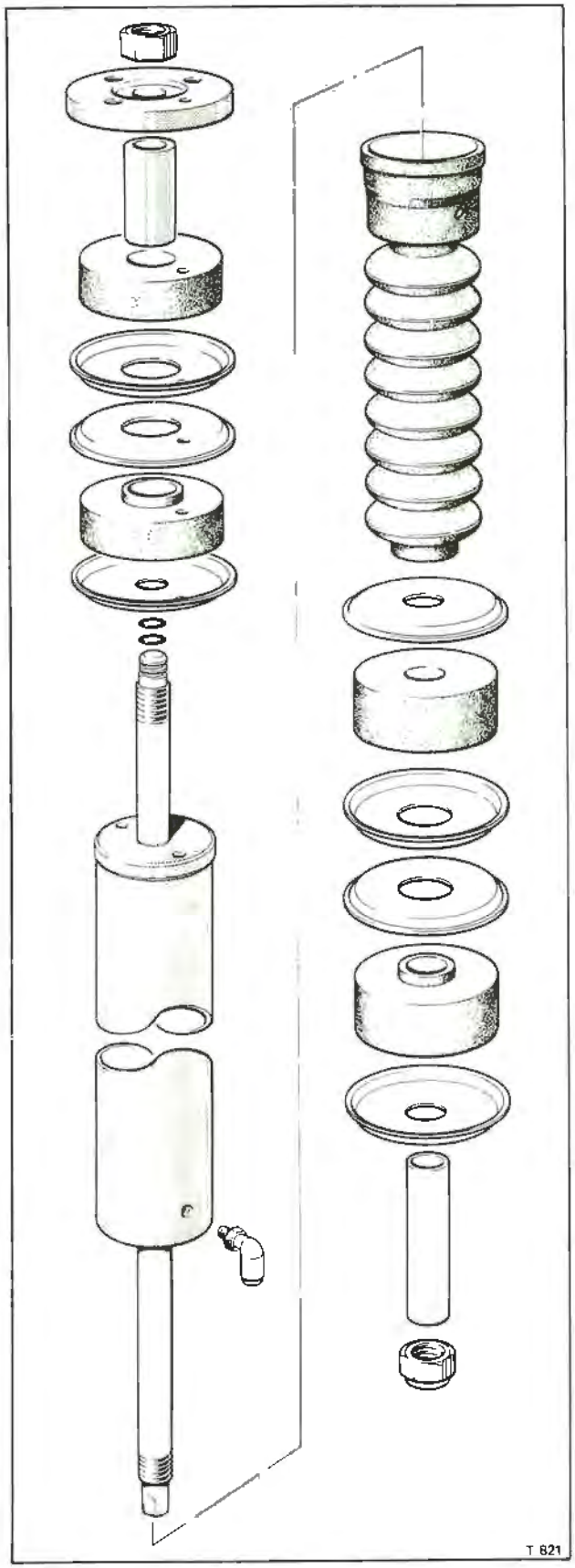

Fig. G30m Rear suspension strut mounts

correct the dimension 'A' should be within a tolerance of between plus 5,08 mm. and minus 3,17 mm. (plus 0.20 in. and minus 0.125 in.) of the dimension at 'B'.

On Corniche cars destined for U.S.A. and Canada an additional spacer ring is fitted to each rear suspension spring to meet the statutory condition of car height. In this case 15,24 mm. (0.60 in.) should be added to the dimension taken at 'B' prior to the comparision of the two dimensions 'A' and 'B' being made.

8. With the standing height correct, the pressure registered on each pressure gauge should be between 21 kg/sq.cm. and 24,5 kg/sq.cm. (300 lb/sq.in. and 350 lb/sq.in.).

If the pressure is above 24,5 kg/sq.cm. (350 lb/sq.in.) the suspension spring has sagged and extra spring packings should be fitted to the springs until the strut pressure registered on the gauge is within the 21 kg/sq.cm. to 24,5 kg/sq.cm. (300 lb/sq.in. to 350 lb/sq.in.) limit.

If the strut pressure is above 24,5 kg/sq.cm. (350 lb/sq.in.) and the standing height is high, either the height control valve is failing to exhaust mineral oil from the strut or the minimum pressure valve setting is too high. Since the latter is an unlikely cause of the fault, the height control valve should be checked as described in Section G12m under Height control valve - To set.

9. Repeat Operation 4 to 8 inclusive. If the fault still persists, renew the height control valve.

10. If the suspension strut pressure is low and the standing height of the car is low either,

a. The height control valve is not admitting oil to the suspension strut, requiring the valve to be renewed.

b. The height control valve is incorrectly adjusted and should be adjusted as described in Section G12m under Height control valve - To adjust.

c. There is a leak from the height control valve minimum pressure valve, suspension strut, gas adapter or associated piping.

Gas spring sphere gas charge pressure - To check

1. Depressurise the hydraulic systems as described in Section G4m.

2. Remove the suspension strut bleed screw from the three-way adapter and fit a zero kg/sq.cm. to 210 kg/sq.cm. (zero lb/sq.in. to 3 000 lb/sq.in.) pressure gauge into the adapter.

3. Load the car sufficiently to ensure the height control valves are in the open position.

4. Ensure the gearchange selector is in the 'P' park position, then remove the gearchange thermal cut-out.

5. Start the engine; note the instantaneous pressure registered on the pressure gauge as the height control valve operates. This initial pressure is the gas spring sphere charge pressure, the sphere having a gas pressure of between 14,21 kg/sq.cm. and 16,24 kg/sq.cm. (203 lb/sq.in. and 232 lb/sq.in.) when fully charged.

In the event of the gas spring sphere gas pressure falling below 10,5 kg/sq.cm. (150 lb/sq.in.) the sphere must be renewed.

Section G15m

Pressure switches

Introduction

Both accumulator pressure switches are situated in the engine compartment on the right-hand valance.

The pressure switches are actuated by the hydraulic system mineral oil in the hydraulic systems and will illuminate the warning panel(s) situated on the facia if the pressure in the hydraulic system(s) falls below a safe working pressure. It is important therefore that the switches are operating correctly at all times.

In the event of a pressure switch failure the pressure switch must be renewed.

Whenever a pressure switch is fitted it is important that only a switch suitable for use with hydraulic system mineral oil is used.

Pressure switches suitable for use with hydraulic system mineral oil can be identified by a green plastic disc fitted around the centre of the switch.

Never fit a pressure switch intended for use with conventional brake fluids (i.e. RR 363) as a replacement.

Pressure switch - To test

1. The hydraulic pressure switches are designed to 'fail safe' i.e. if a pressure switch fails it will operate the facia panel warning lamps.

2. The warning lamp bulb can be checked for correct operation by moving the gear range selector lever to the 'D' Drive position and turning the ignition key against the spring pressure to the 'start' position. This operation should result in all of the panels in the warning cluster situated on the facia being illuminated.

Important

Ensure that both the parking brake and footbrake are applied when carrying out this operation.

3. The best method of testing a hydraulic pressure switch is by substitution. If this is not possible the following procedure should be carried out.

4. Depressurise the hydraulic systems as described in Section G2m.

5. Remove the outlet connection from the pressure switch three way adapter and connect a zero kg/sq. cm. to 210 kg/sq.cm. (zero lb/sq.in. to 3 000 lb/sq. in.) pressure gauge fitted with a connection pipe and bleed screw into the adapter.

6. Connect a battery and test lamp in series to the pressure switch as shown in Figure G32m. The test lamp should illuminate, confirming that the switch contacts are made, denoting no brake fluid pressure.

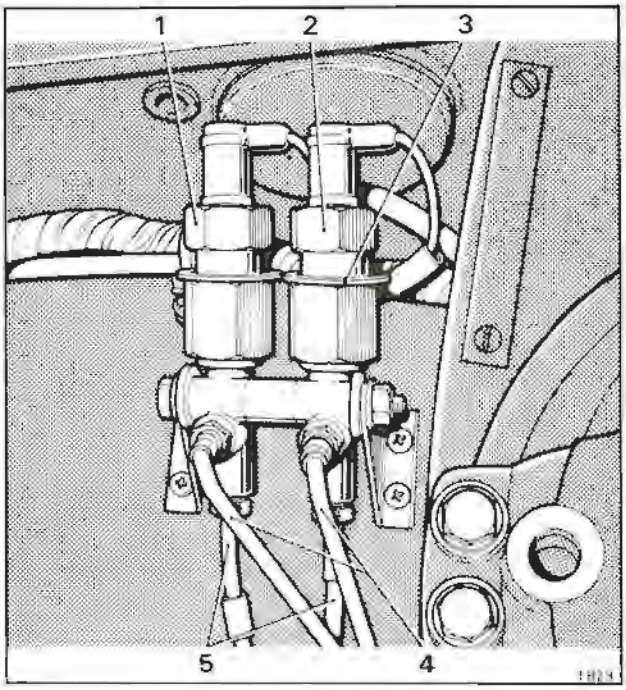

Fig. G31m Pressure switches

1 Pressure switch (No.1 system)
2 Pressure switch (No.2 system)
3 Green identification disc
4 Supply pipes to distribution valves and suspension struts.
5 Supply pipes from accumulators

7. Start and run the engine at approximately 800 r.p.m. and observe the pressure gauge. The test lamp should extinguish at a pressure not exceeding 45,70 kg/sq.cm. (650 lb/sq.in.). Switch off the ignition and using a bleed tube attached to the gauge feed pipe bleed screw, slowly bleed off the mineral oil into a clean container, thus allowing the hydraulic pressure to fall. Observe the pressure at which the test lamp illuminates, this pressure should not be less than 17,58 kg/sq.cm. (250 lb/sq.in.).

8. When tests and rectifications have been completed the systems must be bled as described in Section G4m.

Pressure switch - To renew (see Fig. G31m)

1. Depressurise the hydraulic systems as described in Section G2m.

2. Disconnect the electrical connection from the top of the pressure switch. Unscrew the pressure switch

Printed in England
© Rolls-Royce Motors Limited 1979
February 1979
TSD 4200

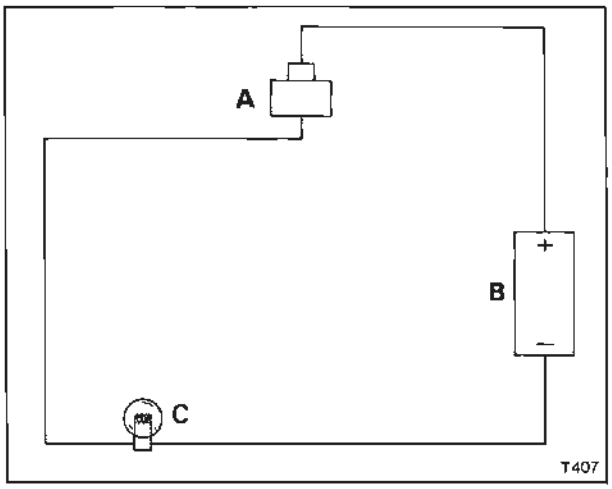

Fig. G32m Pressure switch test circuit
- A Pressure switch
- B Battery
- C Test lamp

from the threeway adapter; discard the two aluminium sealing washers.

3. Screw a new pressure switch into the three-way adapter, fitting a new sealing washer to each side of the distance washer on the switch connection. Torque tighten the switch to the figures quoted in Chapter P.

4. Fit the electrical connection to the pressure switch contact pin.

5. When fitting is completed bleed the hydraulic system as described in Section G4m.

Section G16m

Front and rear disc brakes

Printed in England

© Rolls-Royce Motors Limited 1979

Introduction

Two twin cylinder calipers are fitted to each front wheel and a four cylinder caliper to each rear wheel.

The calipers are divided between the two independently operated hydraulic systems. System 1 operates the front calipers on the front wheels and the upper cylinders on the rear wheel calipers. System 2 operates the rear calipers on the front wheels and the lower cylinders on the rear wheel calipers.

Bleed screws are fitted to the inner faces of each caliper to facilitate bleeding of the two systems.

Brake calipers fitted to cars with mineral oil hydraulic systems are similar in appearance to those fitted to cars using conventional brake fluid (i.e. RR 363). In order to distinguish calipers suitable for use with hydraulic system mineral oil a section of the outer surface is painted green. The calipers are also fitted with a green identification tag around each bleed screw.

Under no circumstances should a caliper for use with conventional brake fluid be used as a replacement.

In order to obtain maximum efficiency and safety from the braking systems it is important that only replacement disc pads of approved design and material specification are fitted.

Brake pads of different specification or different manufacture vary in their friction, wear and operating characteristics and if mixed could have an adverse effect on braking performance.

It is important when changing brake pads that the friction material of the new pads is of the same type and grade as that fitted to the other brake calipers; otherwise it will be necessary to renew all the brake pads.

Inspection of all brake pads must be carried out at the specified service intervals; for details reference should be made to the Service Schedule Manual publication number T.S.D. 4117.

The brake pads must be renewed when the brake pad linings are worn to within 3,18 mm. (0.125 in.) of the back plate.

After fitting new brake pads an initial running-in period of between 1 100 kilometres and 1 300 kilo-metres (700 miles and 800 miles) should be observed.

During this initial running-in period, the brakes should not be applied harshly or for prolonged periods from high speeds except in an emergency. The force with which the brakes are applied may be progressively increased towards the end of the running-in period.

Note

If the brakes are to be relined with pads which have different recommended linings from those previously fitted, the disc faces should be cleaned prior to fitting the new pads. All traces of the old pad material should be removed by hand rotating the disc whilst applying fine emery cloth to the disc faces. Do not emery the disc radially. Always ensure that the same type and grade of pad lining is fitted to all six brake calipers.

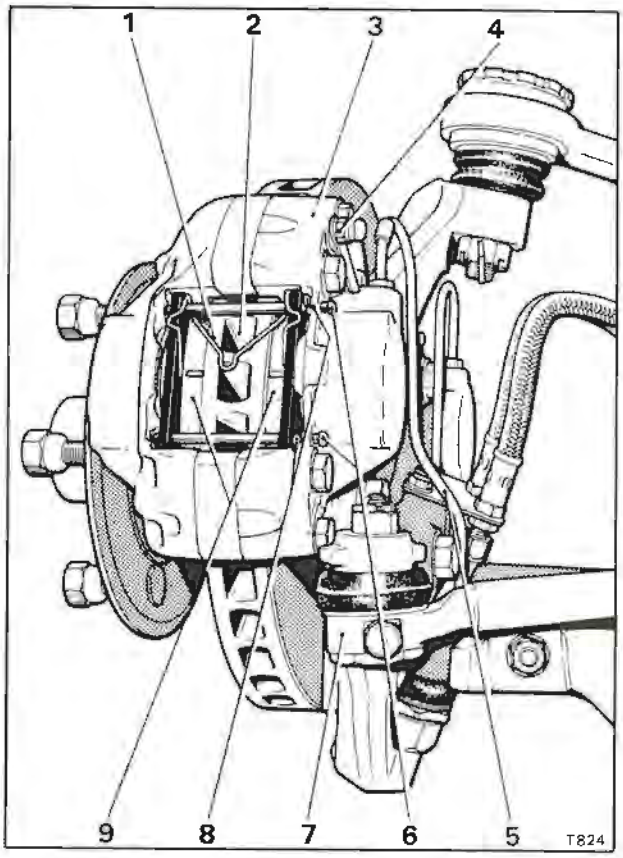

Fig. G33m Front wheel front brake caliper

1 'M' spring
2 Brake disc
3 Brake caliper
4 Bleed screw
5 Brake pressure supply pipe
6 Brake pad retaining pins
7 Track rod
8 Pin retaining clips
9 Brake pads

Front wheel brake pads - To renew

1. Depressurise the hydraulic system as described in Section G2m.

Note

This operation is not essential for brake pad renewal but is recommended as a safety precaution in the event of the brake pedal being accidentally depressed whilst the brake pads are removed.

2. Slacken but do not remove the front road wheel retaining nuts.
3. Securely chock the rear road wheels; jack up the front of the car. Support the car with stands and sill blocks.
4. Remove the front road wheels.
5. Remove the spring clips from the two brake pad retaining pins. Withdraw the pins from the caliper. Unclip the 'M' spring from the rear of each brake pad.
6. Withdraw the brake pads from the caliper.
7. Prior to fitting the new brake pads, inspect the caliper piston dust seals for signs of damage or heat hardening and renew as necessary.
8. Carefully press the caliper pistons back into their bores, taking care not to damage or trap the piston seals. Ensure the piston seal retaining clips are correctly located.
9. Fit the new brake pads into position in the caliper.
10. Fit the trailing, brake pad retaining pin through the caliper and brake pads. Secure the pin with the retaining clip.
11. Locate the ends of the 'M' spring into the centre holes of the brake pad back plate. Ease the spring into position and secure with the leading, pad retaining pin. Fit the pin retaining clip. When fitted the 'ears' of the 'M' spring must rest on the edge of the brake pad backing plate, with the bends at the top of the 'M' figuration butting against the caliper body (see Fig. G33m).

Note

The 'M' spring is only fitted onto the brake pad retaining pin at the leading end of the caliper, i.e. upper pin on the front wheel, front brake caliper and lower pin on the front wheel, rear brake caliper.

When fitting the 'M' spring do not compress the spring more than the normal gap between the two brake pads, otherwise permanent distortion of the spring may occur.

Due to inherent distortion during pad wear, new 'M' springs should be fitted whenever the brake pads are renewed.

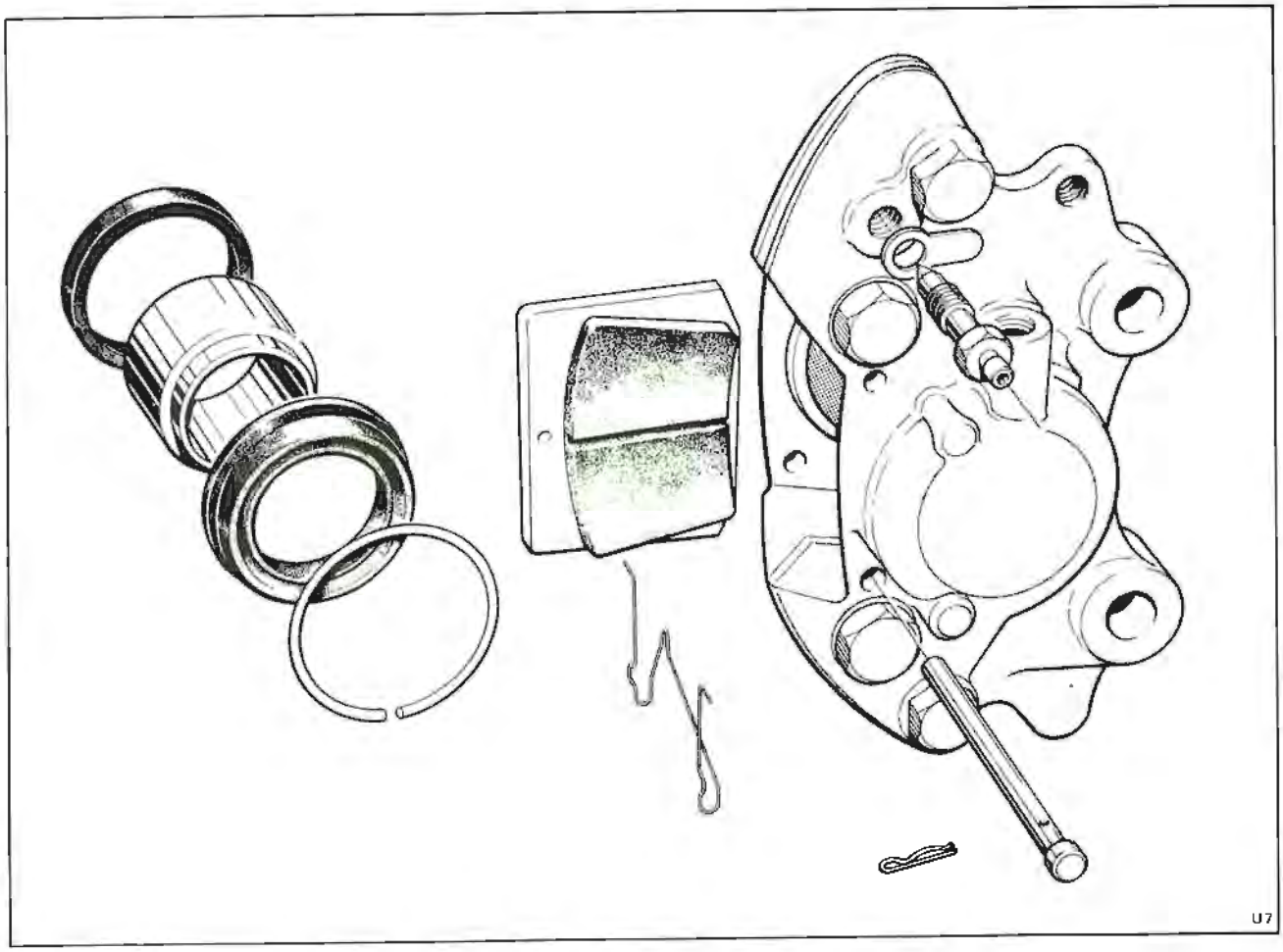

Fig. G34m Front wheel brake caliper (left-hand rear shown)

Printed in England

© Rolls-Royce Motors Limited 1979

Rear wheel brake pads - To renew

1. Depressurise the hydraulic system as described in Section G2m.

Note

This operation is not essential for brake pad renewal but is recommended as a safety precaution in the event of the brake pedal being accidentally depressed whilst the brake pads are removed.

2. Securely chock the front road wheels, then jack up the rear of the car. Support the car with stands and sill blocks.

3. Remove the rear road wheels.

4. Remove the spring clips from the two brake pad retaining pins (see Fig. G35m) and withdraw the pins. Collect the anti-rattle spring clip from the rear of each brake pad.

5. Withdraw the brake pads from the caliper.

6. Prior to fitting the new pads, inspect the caliper piston dust seals for signs of damage or heat hardening and renew as necessary.

7. Carefully press the caliper pistons back into their bores, taking care not to damage or trap the seals. Ensure that the seal retaining clips are correctly located.

8. Fit the new pads by reversing the removal procedure. Ensure that the anti-rattle spring clips and pad retaining pin clips are correctly located (see Fig. G35m).

Front brake caliper - To remove

1. Depressurise the hydraulic systems as described in Section G2m.

2. Securely chock the rear road wheels.

3. Remove the wheel disc from the front wheel then slacken but do not remove the wheel retaining nuts.

4. Raise the front of the car on a hydraulic jack. Securely support the car on stands and sill blocks.

5. Remove the road wheels.

6. Disconnect the caliper feed pipe and blank off the pipe end and caliper port against the ingress of dirt.

7. Remove the fitted bolts which secure the caliper to the axle yoke. Withdraw the caliper off the brake disc.

8. It is recommended that a distance piece is fitted between the caliper pads after removal to prevent the piston easing out of their bores.

Rear brake caliper - To remove

1. Depressurise the hydraulic systems as described in Section G2m.

2. Securely chock the front wheels of the car.

3. Remove the wheel disc from the rear road wheel, then slacken but do not remove the wheel retaining nuts.

4. Raise the rear of the car with a hydraulic jack. Securely support the car on stands and sill blocks. Do not allow the full load of the suspension to hang on the suspension struts.

5. Remove the road wheel.

6. Disconnect the parking brake operating rod from the caliper lever.

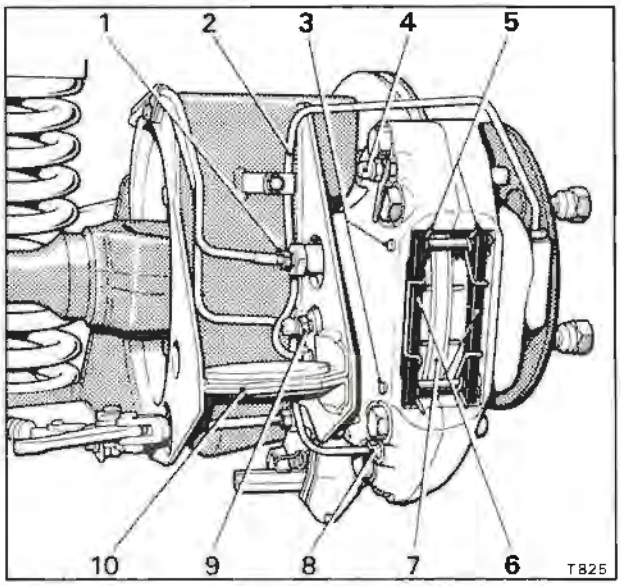

Fig. G35m Rear wheel brake caliper

1 Upper cylinder supply pipe
2 Lower cylinder bridge pipe
3 Brake pad retaining pins
4 Upper cylinder bleed screw (No.1 system)
5 Anti-rattle spring clips
6 Brake pads
7 Brake disc
8 Lower cylinder supply pipe
9 Lower cylinder bleed screw (No2 system)
10 Trailing arm suspension strut mount

7. Disconnect the two feed pipes from the caliper; fit blanks to the pipe ends and caliper ports.

8. Remove the caliper bridge pipe; fit blanks to the pipe ends and caliper ports.

9. Remove the pipe connection adapter and lower bleed screws from the inner face of the caliper.

10. Remove the fitted bolts securing the caliper to the rear hub yoke.

11. Carefully withdraw the caliper off the brake disc.

Note

If difficulty is experienced in withdrawing the caliper from the brake disc, slacken the four bolts securing the hub yoke to the trailing arm approximately four revolutions. Carefully draw the hub assembly away from the trailing arm until sufficient clearance is obtained to allow the removal of the caliper from the brake disc.

Brake caliper piston seals - To renew

The brake caliper seals should be renewed at the intervals specified in the Service Schedule Manual publication number T.S.D. 4117.

Only seals suitable for use with hydraulic system mineral oil must be fitted. Under no circumstances should seals for use with conventional brake fluid (i.e. RR 363) be used.

February 1979

TSD 4200

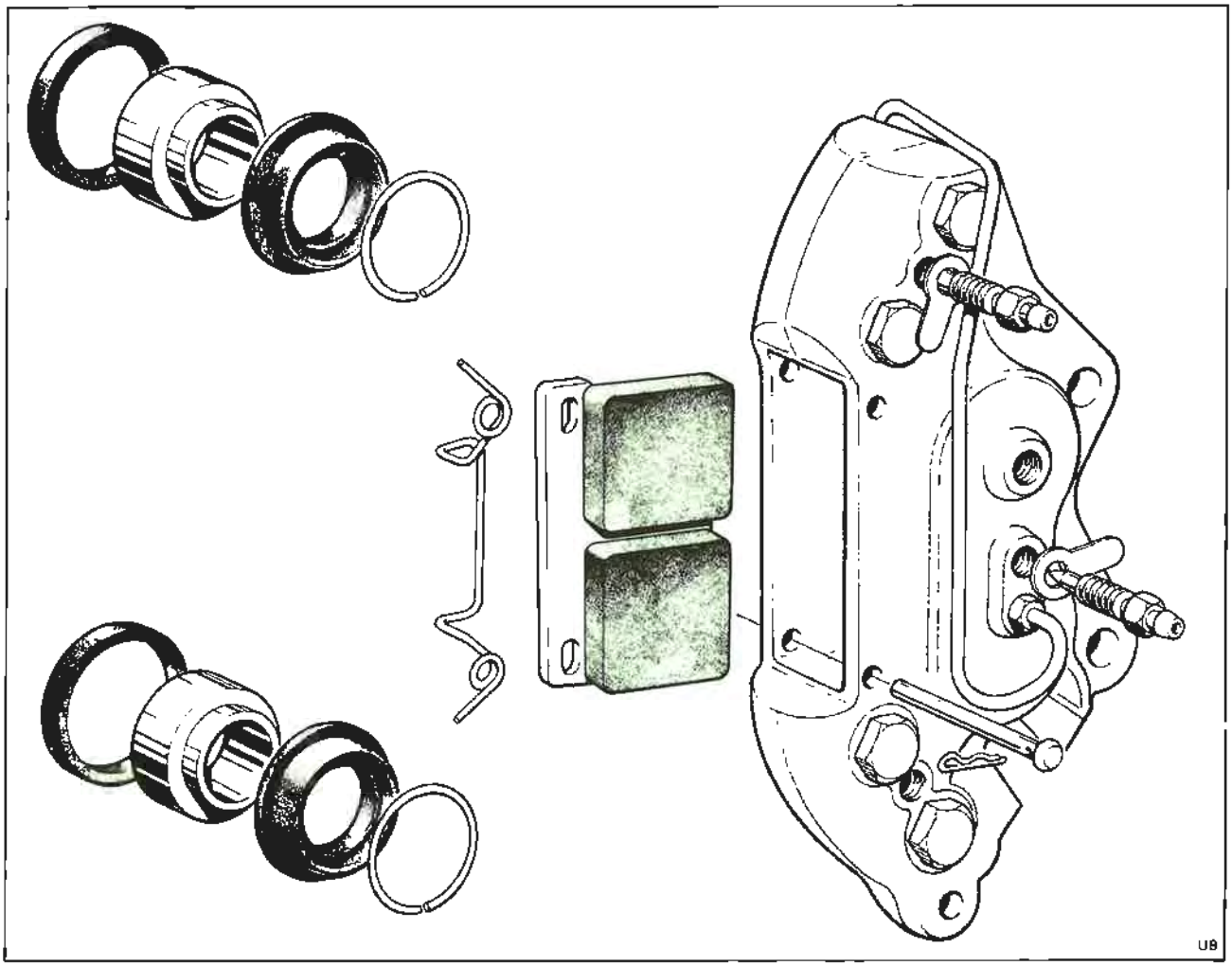

Fig. G36m Rear wheel brake caliper

1. Depressurise the hydraulic systems as described in Section G2m.
2. Remove the brake caliper from the car and remove the brake pads as described previously.
3. Remove the spring clip retaining the caliper piston dust seal; remove the dust seal.
4. Ease the piston from its bore taking care not to damage the piston.
5. Remove the piston seal from the caliper bore.
6. Clean the caliper bore and piston with methylated spirits, and dry thoroughly using dry compressed air.
7. Immerse the new piston seal in approved hydraulic system mineral oil (refer to Chapter D), then carefully insert it into the groove in the caliper bore, ensuring it is correctly seated.
8. Lubricate the piston outside diameter with a small quantity of approved hydraulic system mineral oil, then carefully fit the piston.
9. Fit a new dust seal around the piston top and over the caliper bore flange. Fit the spring ring taking care not to 'pinch' the seal with the ends of the ring.

Brake calipers - To fit

Fit the brake calipers by reversing the respective removal procedure noting the following points.

1. All setscrews and pipe connections must be torque tightened in accordance with the figures quoted in Chapter P.
2. Ensure that a minimum clearance of 8,00 mm. (0.312 in.) is maintained between the caliper bridge pipe and the brake disc when fitting rear brake calipers.
3. When fitting is completed bleed the hydraulic systems as described in Section G4m.

Note

The supply pipe connection ports on the front wheel brake calipers are a metric threaded fitting and only pipes fitted with the correct metric pipe nuts should be used.

Brake disc - To remove

1. Depressurise the hydraulic systems as described in Section G2m.
2. Remove the front or rear hub as necessary, following the procedure described in Chapter H

Front hubs or Chapter J Rear hubs.
3. To remove a front brake disc remove the setscrews securing the disc to the hub.
4. To remove a rear brake disc dismantle the rear hub as described in Chapter J then unscrew the disc retaining setscrews.

Brake disc - To fit
Fit the brake disc by reversing the procedure for removal noting the following points.
1. All setscrews must be torque tightened in accordance with the figures quoted in Chapter P.
2. The hubs must be assembled and fitted as described in their respective Chapter H or J.
3. On completion the hydraulic systems must be bled as described in Section G4m.

Note
New brake discs are treated with a protective film. When a new disc has been fitted the brakes should be gently applied until the protective film has been removed from the working surface of the disc by the first few brake applications.

If only one front brake disc has been replaced the car will gently pull to the side opposite the new disc until the protective film has been removed.

Printed in England
© Rolls-Royce Motors Limited 1979

Section G17m

Parking brake linkage

Printed in England

© Rolls-Royce Motors Limited 1979

Introduction

The parking brake is operated by a hand pulled mechanism on right-hand drive cars and by a foot pedal application with a hand pull release on left-hand drive cars. Both types of mechanism operate a caliper lever arrangement fitted beneath the two rear hydraulic brake calipers. These levers apply a wedge shaped friction pad to each side of the brake disc.

The parking brake should be inspected for wear and manually adjusted at the intervals specified in the Service Schedule Manual publications T.S.D. 4117.

Pads must be renewed when the friction material has worn to within 3,18 mm. (0.125 in.) of the pad back plates.

Hand operated ratchet assembly - To remove

Right-hand drive cars

1. Place the car on a ramp and securely chock the road wheels. Release the parking brake to the 'off' position.

2. At the intermediate linkage on the underside of the body, unhook the parking brake return spring from the operating lever. Remove the clevis pin attaching the front parking brake cable to the end of the lever (see Fig. G37m).

3. Remove the trim retaining screw from the centre panel of the parking brake handle aperture.

4. Remove the Lucar connectors from the micro-switch mounted on the lower end of the ratchet assembly cover tube.

5. Remove the setscrews securing the upper support bracket to the facia structure.

6. Remove the setscrew securing the lower support bracket.

7. Ease the complete ratchet assembly downwards, from beneath the facia.

8. Draw the ratchet assembly away from the toe-board and disconnect the cable from the retaining piece bolted to the bottom of the operating rod; remove the assembly.

Hand operated ratchet assembly - To dismantle

1. Remove the ratchet assembly from the car as described previously.

2. Remove the cable retainer from the lower end of the operating rod. Refit the screw into the operating rod to retain the coil spring and end fittings.

3. Remove the cheese headed screw and washer from behind the cover tube locking nut.

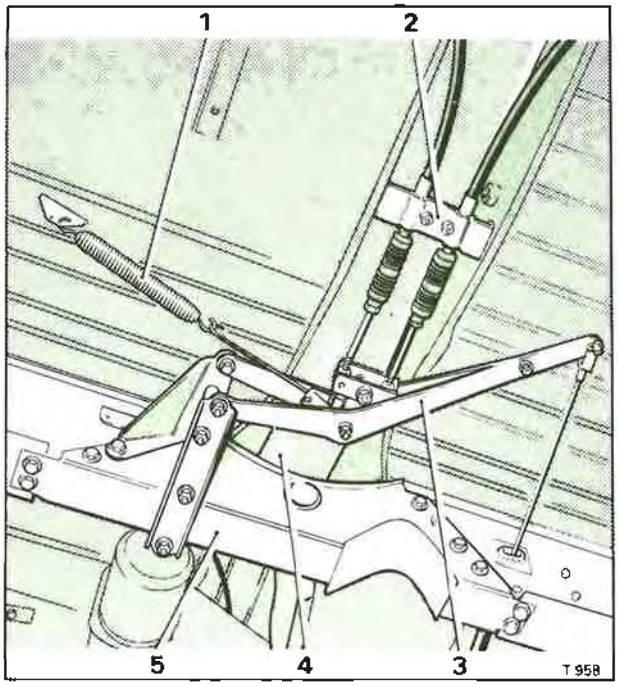

Fig. G37m Parking brake intermediate linkage (Right-hand drive cars)

1 Return spring
2 Abutment bracket rear brake cables
3 Operating lever
4 Propeller shaft
5 Centre body member

4. Unscrew the locking nut from behind the upper support bracket.

5. Withdraw the operating rod and roller assembly from the cover tube.

The roller assembly can be extracted from the cover tube by pulling the assembly to the top of the tube, then tilting the tube and carefully manipulating first one roller then the other roller out of the slots.

6. Remove the retaining screw from the lower end of the operating rod. Slide the coil spring, stop plate, roller assembly and distance piece off the operating rod.

7. Remove the operating rod from the upper housing and seperate the housing and ratchet components.

8. Inspect all components for signs of wear and damage, paying particular attention to the bushes, ratchet assembly and springs. New parts should be fitted as necessary.

February 1979

TSD 4200

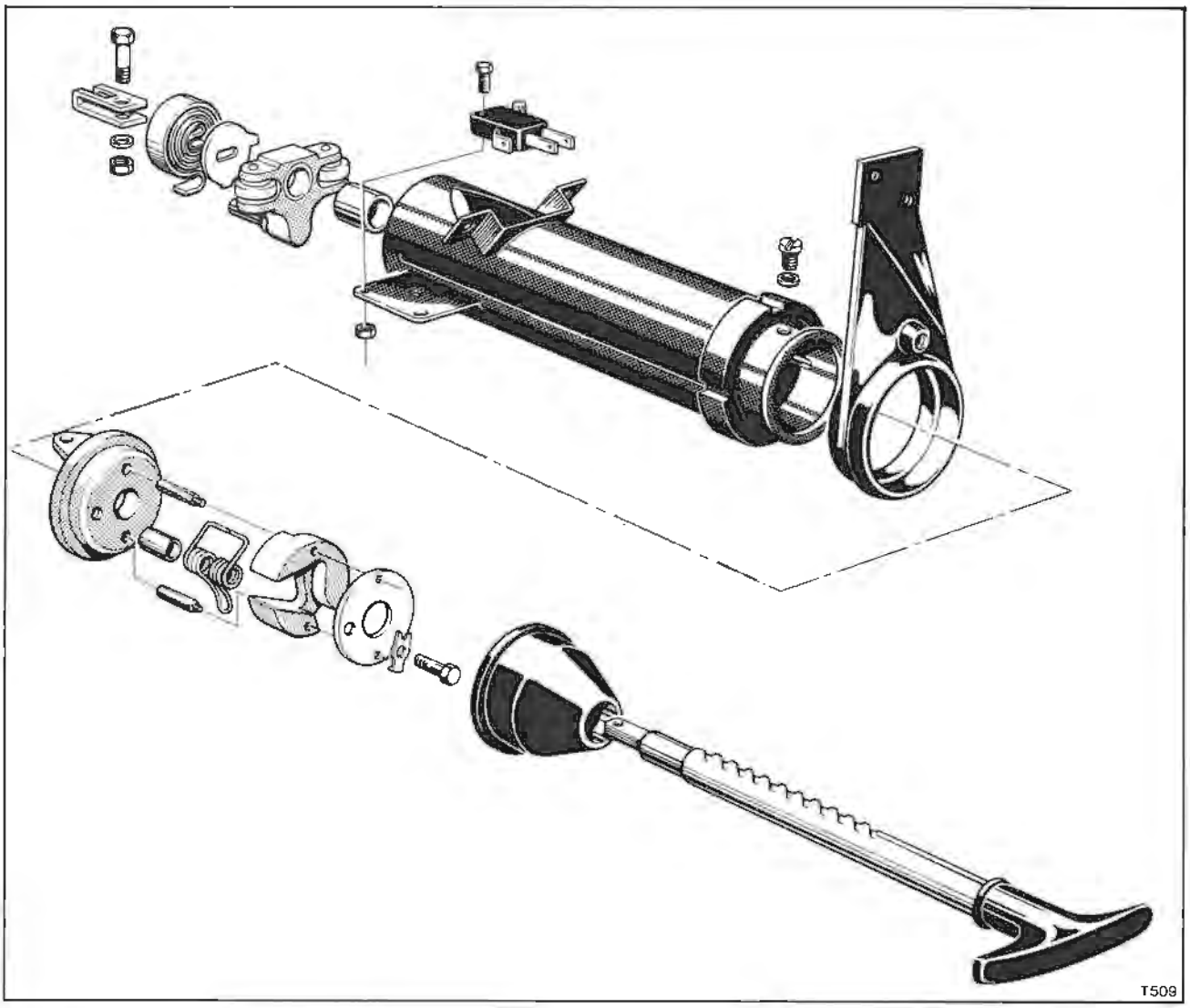

Fig. G38m Parking brake ratchet assembly (Right-hand drive cars)

Hand operated ratchet assembly - To assemble
Assemble the ratchet assembly by reversing the procedure given for dismantling noting the following points.
1. The hand operating rod is spring loaded and must turn in a clockwise direction from the horizontal position to release the ratchet mechanism. For correct operation ensure that the coil spring and stop plate fitted below the roller assembly are located as shown in Figure G38m.
2. Lightly lubricate the ratchet panels and roller mechanism using Retinax A grease or equivalent.
3. Care must be taken when entering the rollers and operating rod into the cover tube slots. Hold the tube at an angle to the control rod. Enter one roller into the tube, then carefully manipulate the other roller into position.
4. The cable retainer should be fitted after the control rod and roller assembly has been fitted into the cover tube.
5. Adjust the micro-switch so that on the initial movement of the parking brake the facia warning panel marked PARKING BRAKE illuminates.

Hand operated ratchet assembly - To fit
Fit the ratchet assembly by reversing the procedure given for removal noting the following points.
1. All setscrews should be torque tightened in accordance with the figures quoted in Chapter P.
2. Care should be taken to ensure the brake cable end is located correctly in the connector link.
3. Ensure that the brake cable is correctly positioned in the guide pulleys.
4. Check the operation of the mechanism to ensure free movement of the rachet assembly and brake cable.

Foot operated parking brake mechanism - To remove
Left-hand drive cars
1. Place the car on a ramp and securely chock the

road wheels. Release the parking brake to the 'off' position.

2. At the intermediate linkage on the underside of the body, unhook the parking brake return spring from the operating lever. Remove the clevis pin attaching the front brake cable to the lever (see Fig. G39m).

3. Remove the knee roll trim from the parking brake area as described in Chapter S in order to gain access to the four setscrews which retain the foot pedal mechanism.

4. Disconnect the Lucar connections from the micro-switch.

5. Disconnect the brake cable from the retaining piece on the actuation lever.

6. Remove the four pedal mechanism retaining setscrews and lower the mechanism from beneath the facia.

Foot operated parking brake mechanism - To dismantle

1. Remove the foot operated parking brake mechanism as described previously.

2. Remove the sprag plate and release lever return springs.

3. Dismantle the parking brake foot mechanism by removing the pivot bolts from the foot pedal lever, sprag plate, release actuator and hand release lever. Remove these items from the mounting bracket frame; collect the distance tube from each pivot.

4. Seperate the release actuator from the intermediate lever by removing the clamping setscrew, collect the distance piece.

5. Inspect all items for wear and damage; renew parts as necessary.

Foot operated parking brake mechanism - To assemble (see Fig. G40m)

Assemble the parking brake mechanism by reversing the procedure given for dismantling noting the following points.

1. Sparingly smear the inside of the sprag plate hole with Retinex 'A' grease or equivalent.

Note

The sprag rod must be clean, dry and free of lubricant.

2. The sprag plate pivot bolt should be fitted with the bolt head on the left-hand side of the frame. All other bolts should be fitted from the right-hand side of the frame.

3. Adjust the mechanism as described under Foot operated parking brake - To adjust.

4. All setscrews should be torque tightened to the figures quoted in Chapter P.

Foot operated parking brake - To adjust (see Fig. G41m)

Operations 1 to 3 inclusive can be carried out with the parking brake mechanism removed from the car.

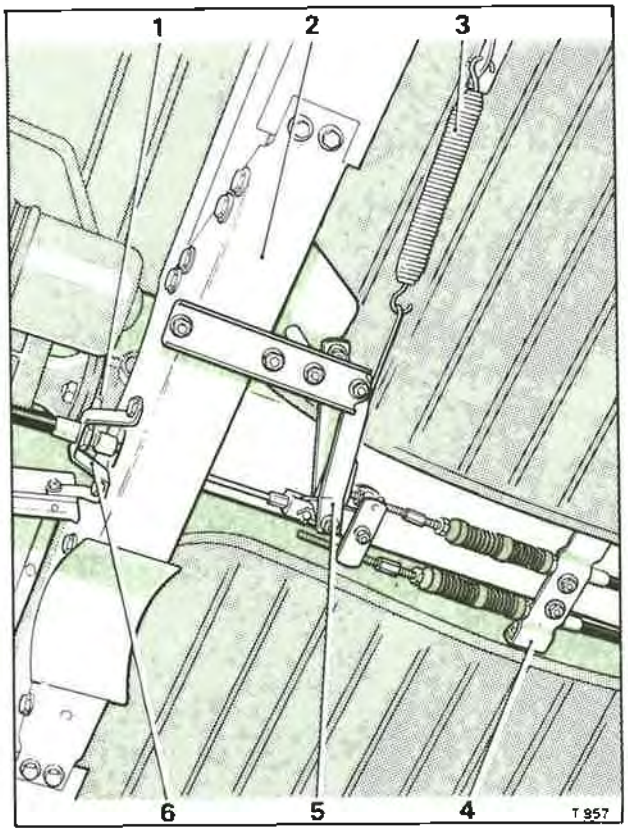

Fig. G39m Parking brake intermediate linkage (Left-hand drive cars)

1 Propeller shaft
2 Centre body member
3 Return spring
4 Abutment bracket - rear brake cables
5 Operating lever
6 Mounting bracket - front brake cable

1. Slacken the setscrew securing the intermediate lever to the actuator.

2. Slowly depress the pedal from the 'off' position. The sprag plate will rise from its 'off' position for approximately one third of the sprag rod's length, then lower for the remainder of pedal travel. With the sprag plate in its highest position adjust the actuator to obtain a clearance of 0,127 mm. to 0,254 mm. (0.005 in. to 0.010 in.) between the actuator pawl and the sprag plate. Tighten the setscrew securing the intermediate lever to the actuator.

3. With the sprag rod approximately 3,17 mm. (0.125 in.) away from its rubber off stop, set the warning lamp micro-switch so that it operates i.e. the point where the switch gives an audible click. Check that the switch roller assembly is not trapped between the switch body and roller ramp when the sprag rod is against the 'off' stop.

4. Release the parking brake caliper adjusters at the rear wheels to enable the parking brake pedal to be fully depressed to the floor. Check the release

Printed in England
© Rolls-Royce Motors Limited 1979

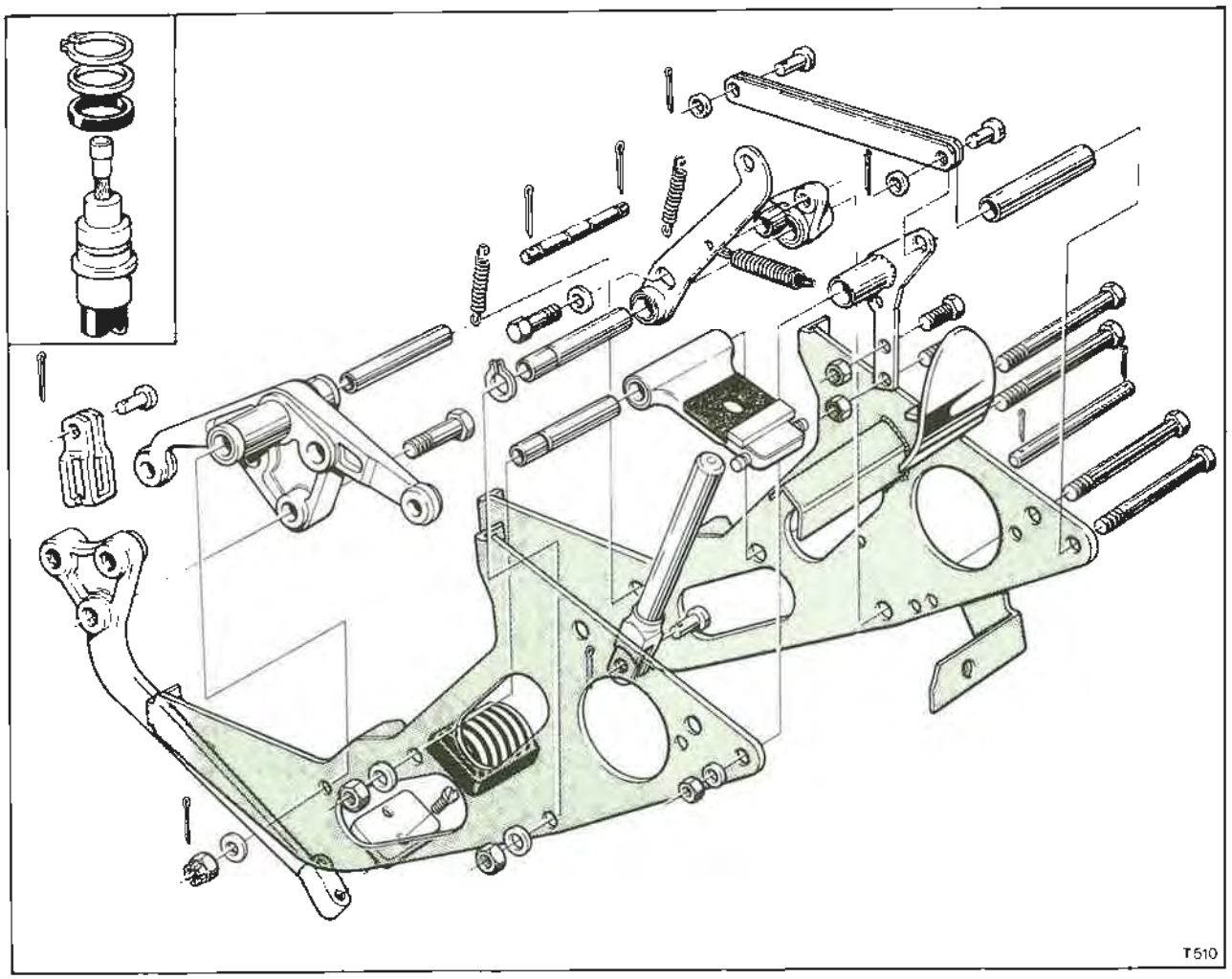

Fig. G40m Foot operated parking brake and cable connection

handle travel; there should be a minimum of 12,70mm. (0.50 in.) extra travel (measured at the end of the release handle) after the point of mechanism release. If the handle travel is incorrect the clearance between the actuator pawl and the sprag plate should be checked as described previously in Operation 2.

5. Adjust the parking brake cables and pads as described in their relevant sections.

6. Apply the parking brake. The foot pedal should remain in the 'on' position without slipping until the mechanism is released. If slipping occurs inspect the sprag rod and sprag plate for signs of wear and replace as necessary.

7. Check that the facia warning lamp marked PARKING BRAKE is extinguished when the brake is released to the 'off' position.

Foot operated parking brake - To fit

Fit the foot operated parking brake by reversing the procedure for removal noting the following points.

1. All setscrews should be torque tightened in accordance with the figures quoted in Chapter P.

2. Care should be taken to ensure the brake cable end is located correctly in the connector link.

3. Check the operation of the parking brake as described in Foot operated parking brake - To adjust.

Parking brake front cable - To remove
Right-hand drive cars

1. Remove the hand operated ratchet assembly as described under Hand operated ratchet assembly - To remove.

2. Remove the circlip retaining the rubber seal to the brake cable on the interior side of the toeboard. Remove the seal from the cable.

3. Remove the two setscrews retaining the felt seal housing to the engine side of the toeboard. Withdraw the cable from the housing and felt seal.

4. Remove the two brake cable guide pulleys; collect the distance tube from the centre of each pulley.

5. Remove the nuts and bolts retaining the brake cable outer cover to their mountings on the under side of the body. Also remove the clips retaining the cable in position.

6. Carefully withdraw the brake cable from behind

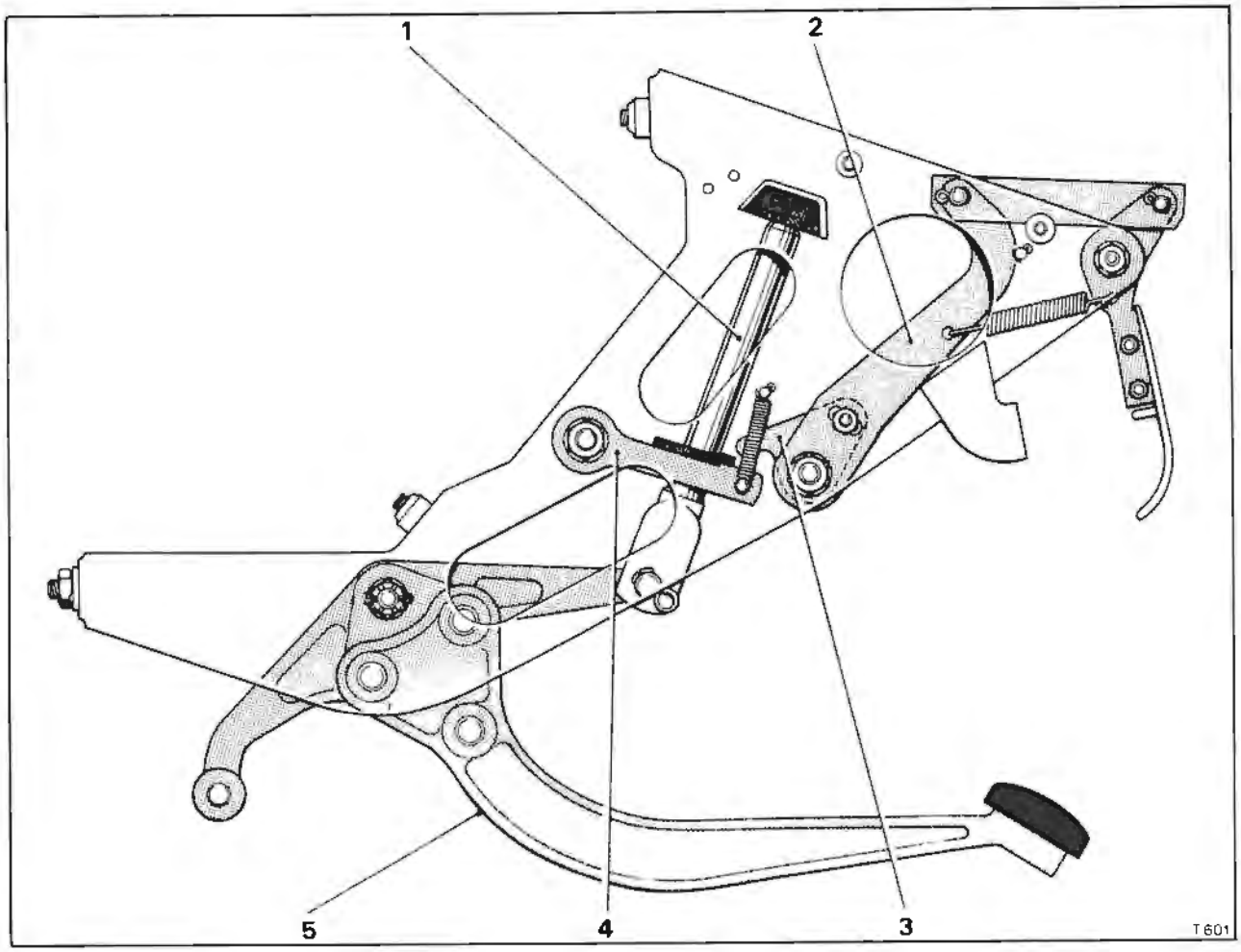

Fig. G41m Foot operated parking brake adjustment components

1 Sprag rod
2 Intermediate lever
3 Actuator
4 Sprag plate
5 Foot pedal

the exhaust pipe heatshield and remove it from the car.

Parking brake front cable - To fit
Right-hand drive cars

Fit the parking brake front cable by reversing the procedure given for removal noting the following points.

1. All setscrews and nuts should be torque tightened in accordance with the figures quoted in Chapter P.
2. Lubricate the guide pulley pivots with Molytone 265 grease and the pulley grooves with Midland Silicone MS44 grease.

Note

Use of any other grease on the pulley grooves could have a harmful effect on the inner cable low friction coating.

3. Ensure that the guide pulley cable retainers are correctly located in the pulley mounting brackets.
4. Check for freedom of movement during the application and release of the parking brake. The parking brake should operate freely without roughness or binding throughout its operation.
5. Adjust the parking brake cables and calipers as described under Parking brake cables and calipers - To adjust.

Parking brake front cable - To remove
Left-hand drive cars

1. Carry out Operations 1 and 2 of Foot operated parking brake mechanism - To remove.
2. Disconnect the front end of the brake cable from the retaining piece on the actuation lever of the foot pedal mechanism.
3. Remove the circlip retaining the outer cable to the car floor below the foot pedal mechanism.
4. Disconnect the rear end of the outer cable from the support bracket on the centre crossmember of the body.
5. Disconnect the clip securing the cable to the

Printed in England
© Rolls-Royce Motors Limited 1979
February 1979
TSD 4200

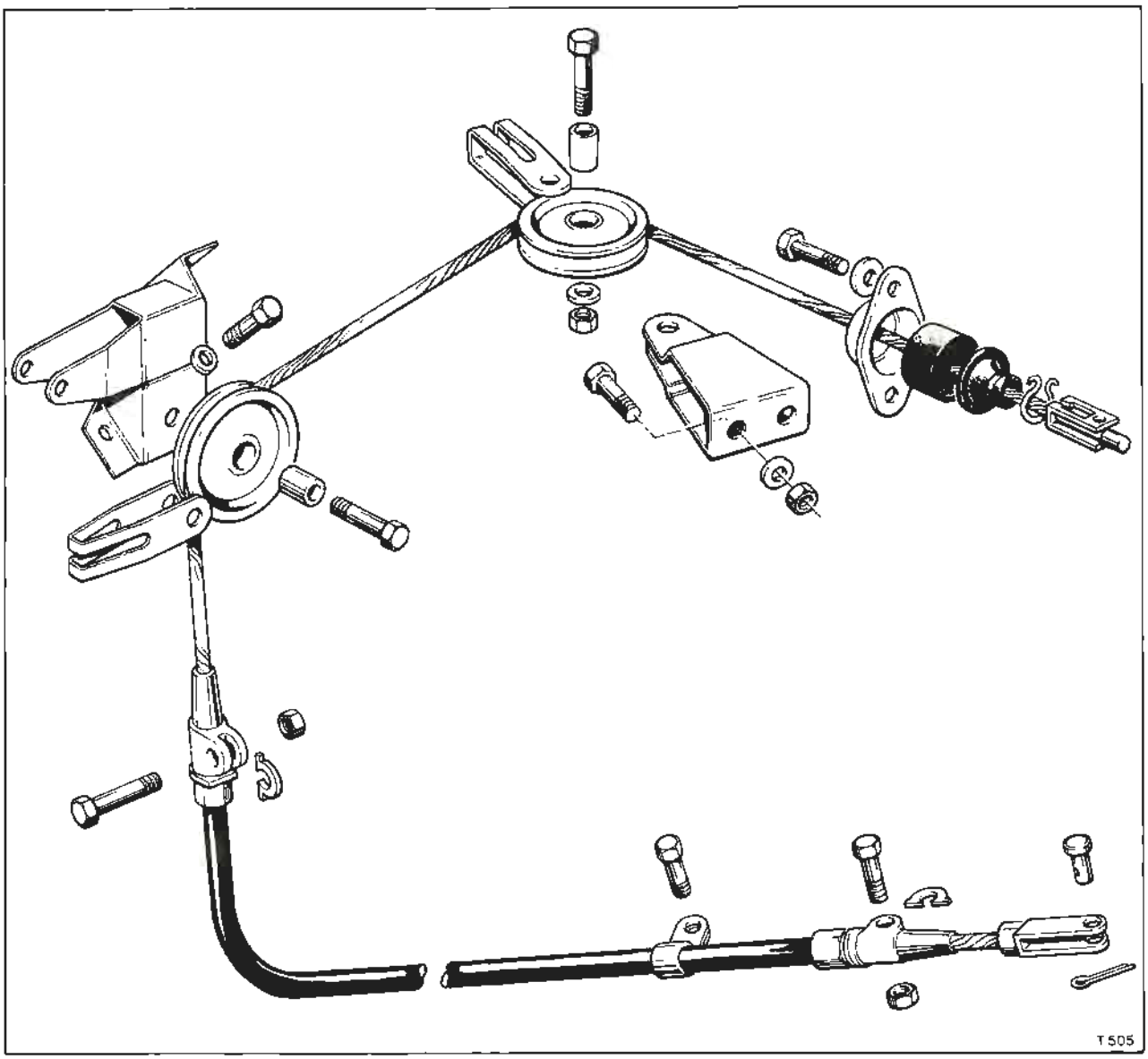

Fig. G42m Parking brake front cable and pulleys (Right-hand drive cars)

bracket on the transmission sump. Remove the brake cable from the car.

Parking brake front cable - To fit

Left-hand drive cars

Fit the parking brake front cable by reversing the procedure given for removal noting the following points.

1. All setscrews and nuts should be torque tightened in accordance with the figures quoted in Chapter P.
2. Lubricate the clevis pin with Molytone 265 grease prior to fitting.
3. Check for freedom of operation during the application and release of the parking brake. The parking brake should operate freely without roughness or binding throughout its operation.
4. Adjust the cables and calipers as described under Parking brake cables and calipers - To adjust.

Parking brake rear cables - To remove

Although the parking brake intermediate linkages, situated on the centre body crossmember are different for right-hand and left-hand drive cars, the rear brake cable arrangements are identical.

1. Disconnect the rear cables at the equaliser fitted to the intermediate linkage on the centre body crossmember.
2. Disconnect the rear end of each cable from the parking brake caliper mechanism.
3. Remove the two centre bolts from the abutment bracket at the front end of the cables; collect the top clamping plate.
4. Disconnect the cable support clips.
5. Carefully withdraw the cables from beneath the heat shields and remove them from the car.

Printed in England

© Rolls-Royce Motors Limited 1979

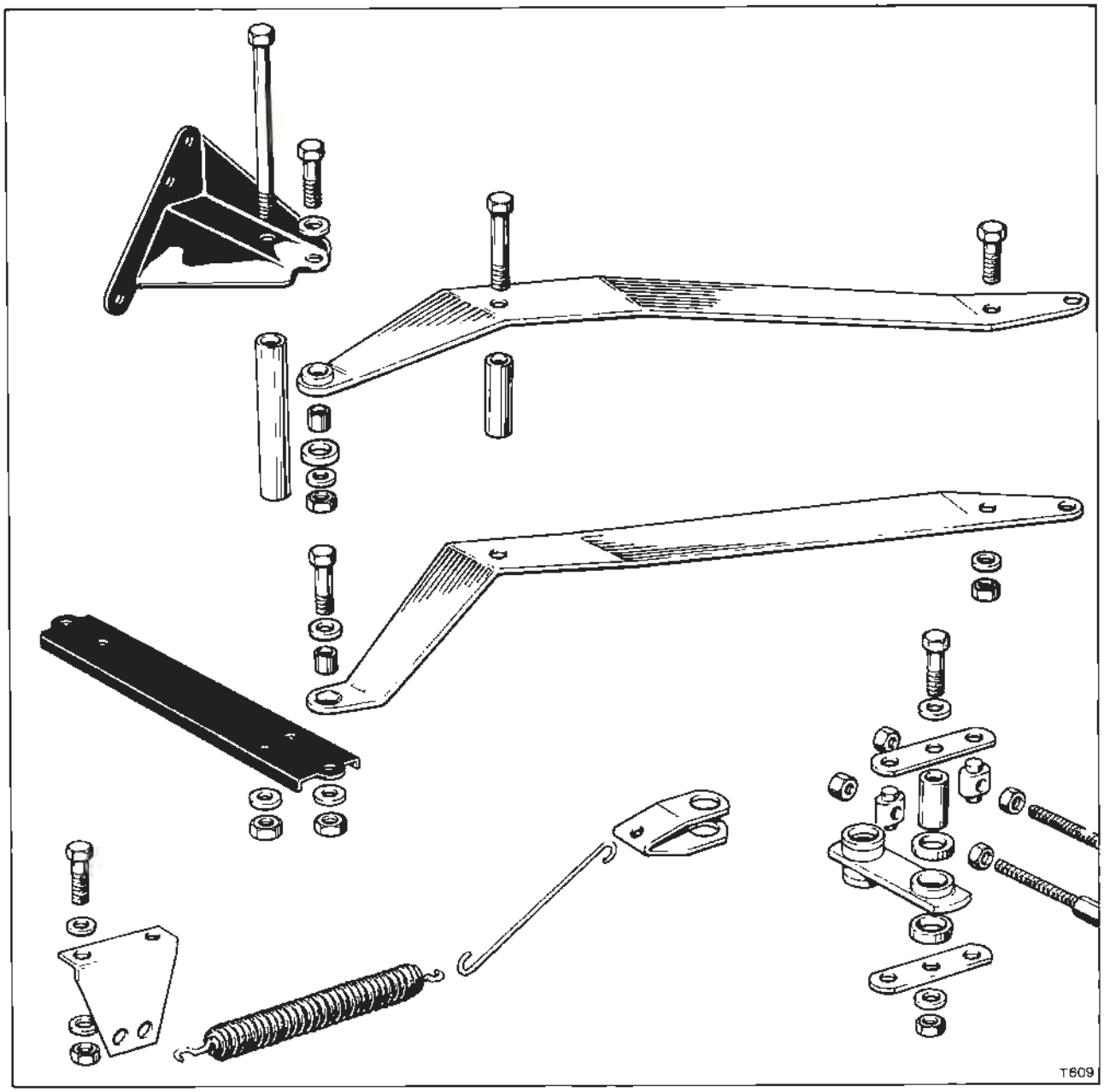

Fig. G43m Parking brake intermediate linkage (Right-hand drive cars)

Parking brake rear cables -To fit

Fit the parking brake rear cables by reversing the procedure given for removal noting the following points.

1. All setscrews and nuts should be torque tightened in accordance with the figures quoted in Chapter P.
2. Lubricate the clevis pins and cable adjustment threads with Molytone 265 grease prior to fitting.
3. Check for freedom of operation during the application and release of the parking brake. The parking brake should operate freely without roughness or binding throughout its operation.
4. Ensure that the cables are correctly located in the cable support clips and can move freely through them. Also, that the cables are routed above the lower tube of the rear suspension space frame.
5. Adjust the cables as described under Parking brake cables and calipers - To adjust.

Parking brake cables and calipers - To adjust

Before any adjustments are made to the parking brake rear cables the caliper on each rear wheel should be set as follows.

1. Remove the clevis pin connecting the brake cable to the actuation lever.
2. Disconnect the actuation rod from the actuation lever.

February 1979

TSD 4200

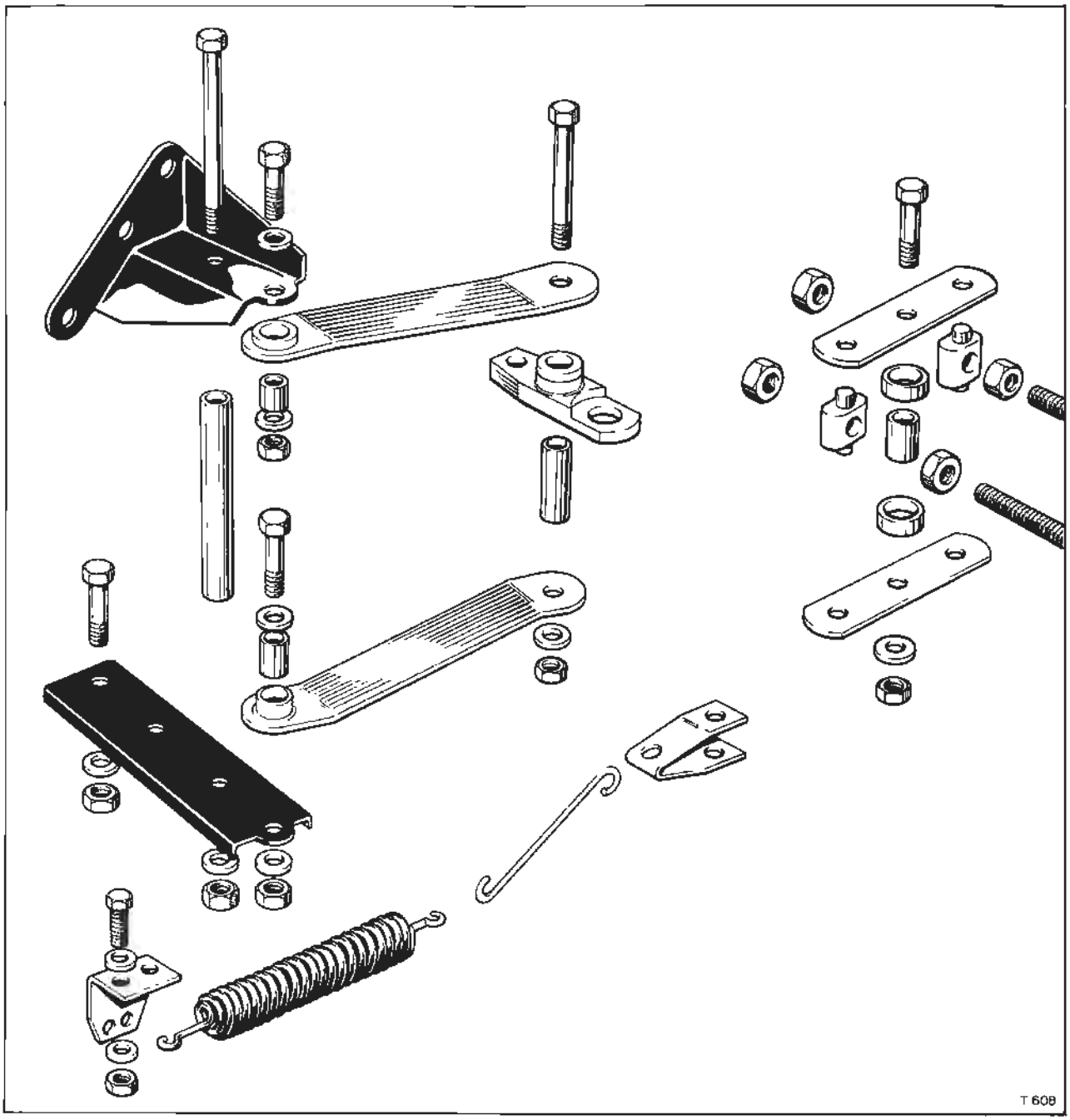

Fig. G44m Parking brake intermediate linkage (Left-hand drive cars)

3. Check and adjust if necessary, the length of the actuation rod, to obtain a measurement of 63 mm. (2.5 in.) between the exposed face of the jaw locknut and the face of the opposite jaw.

4. Position the rod onto the actuation lever; fit the clevis pin, waved washer and split pin. Lubricate the clevis pin with Molytone 265 grease or equivalent.

5. Ensure the parking brake caliper is on its 'offstop'. Check that the clearance (point A) between the washer on the spring guide rod and the spring abutment bracket is approximately 6 mm. (0.25 in.) at the point of minimum clearance. (see Fig. G45m)

Note
The washer fitted to the end of the spring guide rod must not act as the parking brake 'off stop' as this will cause caliper pad misalignment.

6. Connect the rear brake cable to the actuation lever.

7. Ensure that the parking brake is in the fully 'off' position. Adjust the rear cables at the equaliser on the intermediate linkage until the caliper 'off stops' are just clear of the caliper. Measure the gap beneath each 'off stop' and lengthen the cables at the adjusters by this amount.

Printed in England
© Rolls-Royce Motors Limited 1979
February 1979
TSD 4200

Note
The cables must be adjusted so that the equaliser tranverse link, lies at right angles to the centre line of the car with the parking brake in the 'off' position.

8. Raise each rear wheel in turn so that it is free to rotate. Turn the caliper adjuster clockwise until the parking brake pads grip the brake disc. At this point it should only just be possible to rotate the wheel by hand. Turn the adjuster anti-clockwise a quarter turn (three clicks on the nut) to obtain minimum clearance between the pads and disc.

9. Ensure that the centralising straps are forcing the pads away from the disc when the parking brake is in the 'off' position. If not, remove the retaining bolt securing the straps; bend the straps outwards then re-assemble.

10. When new brake pads have been fitted carry out the pad bedding operation as described under Parking brake pads -'To bed-in'.

Parking brake pads - To renew

1. Securely chock the front wheels.

2. Raise the rear of the car and place sill blocks under the rear end of the body sills. Support the trailing arms; do not allow the suspension struts

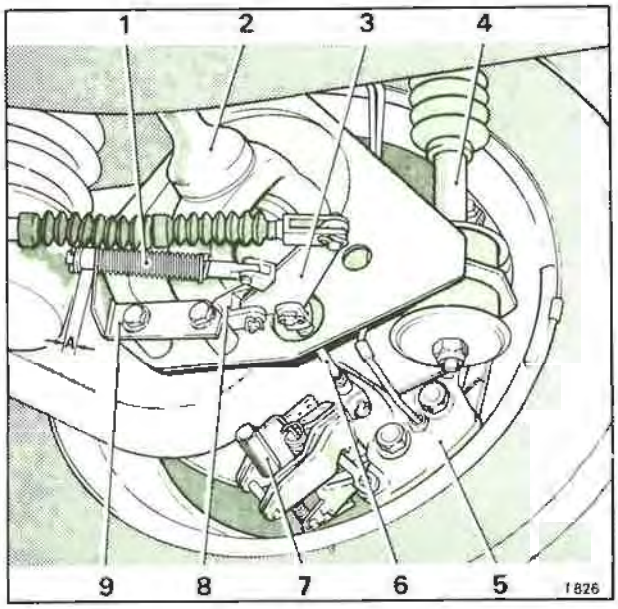

Fig. G45m Parking brake caliper and cable adjustment
1 Guide rod and return spring
2 Half-shaft
3 Actuation lever
4 Suspension strut
5 Brake caliper
6 Actuation rod
7 Caliper adjuster
8 Mounting bracket
9 Spring abutment bracket

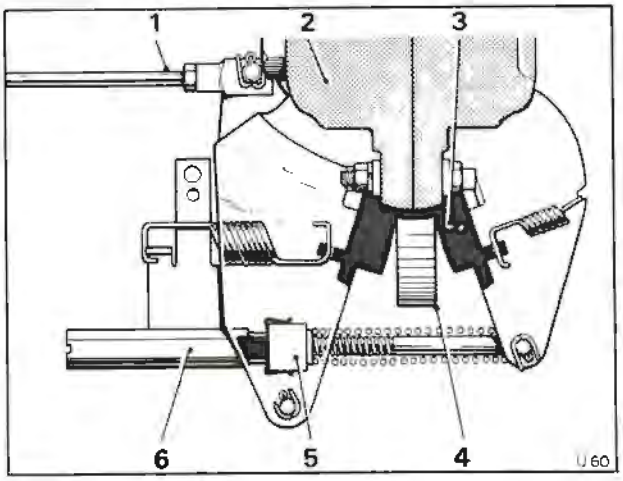

Fig. G46m Parking brake caliper
1 Actuation rod
2 Brake caliper
3 Parking brake pads
4 Brake disc
5 Adjuster clicker block
6 Adjuster

to support the full suspension load.

3. Remove the rear wheels.

4. Release the parking brake to the 'off' position.

5. Disconnect the caliper actuation rod from the caliper lever.

6. Unscrew and remove the caliper adjuster. Collect the adjuster clicker plate.

7. Unhook the pad retention springs from each brake pad; note that the larger spring is fitted to the inner parking brake pad.

8. Lift out the parking brake pads from the caliper and remove the retention springs.

9. Fit the springs to the new pads, then locate the pads in position. Hook the springs onto the caliper levers.

10. Complete the assembly by reversing the removal procedure and adjusting the calipers and cables as described under Parking brake cables and calipers - To adjust.

Parking brake pads - To 'bed-in'

When new parking brake pads are fitted to the car the following 'bedding-in' procedure should be carried out.

1. Drive the car at 48 k.p.h. (30 m.p.h.) and apply the parking brake to bring the car to rest. The parking brake should be applied in such a way that the retardation of the car is constant without locking the wheels. This operation should be carried out nine times, allowing at least one minute to elapse between applications to prevent overheating.

2. Re-adjust the parking brake caliper as described in Operation 8 of Parking brake cables and calipers - To adjust.

Section G18m

Brake and height control hydraulic systems

Systematic check sequence chart

Facia warning lamps 1 BRAKE PRESSURE and/or 2 BRAKE PRESSURE illuminated (Intermittently or continuously)

Sheet 1 of 2

Printed in England

© Rolls-Royce Motors Limited 1980

March 1980

TSD 4200

Operation 1

Check the reservoir mineral oil level.

Mineral oil level low.

Top-up the reservoirs to the correct level and bleed the hydraulic systems.

Check the hydraulic pipes and units for leakage.

Rectify any leakage as necessary and bleed the hydraulic systems.

If warning lamps remain illuminated carry out Operation 2.

Check the brake pads for wear.

Replace worn or defective brake pads.

Operation 2

Depressurise the hydraulic system as described in Section G2m.
Replace the pressure switch of the relevent system with a length of high pressure pipe fitted with a bleed screw connection and a 210 kg/sq.cm. (3 000 lb/sq.in.) pressure gauge (RH 9546).
Start the engine and allow it to idle at approximately 1 000 r.p.m.
Carefully observe the pressure gauge.

The correct behaviour of the gauge is as follows.
The gauge needle should immediately rise to 63 kg/sq.cm. (900 lb/sq.in.) indicating the nitrogen gas pressure in the accumulator sphere. The pressure should then slowly rise to a pressure of between 167 kg/sq.cm. and 177 kg/sq.cm. (2 393 lb/sq.in. and 2 538 lb/sq.in.). At this pressure the accumulator cut-out valve should actuate and the pump cease to charge the accumulator.
After the cut-out pressure has been reached note the pressure to which the gauge settles. This settling takes up to one minute and the pressure should not be more than 10,5 kg/sq.cm. (150 lb/sq.in.) below the cut-off pressure. The pressure should then remain steady unless the brake pedal is applied or the height control system actuated.
Fit a bleed tube onto the bleed screw of the gauge connecting pipe. Open the bleed screw and allow the pressure gauge reading to fall. When the pressure has fallen to between 142 kg/sq.cm. and 152 kg/sq.cm. (2 031 lb/sq.in. and 2 176 lb/sq.in.) the accumulator control valve should allow the hydraulic pump to recharge the accumulator. This indicates the correct build up and cut-off of the accumulator and that the system is functioning correctly.

If, on first starting the engine, the pressure gauge needle fluctuates violently, rapidly climbs to 175,5 kg/sq.cm. (2 500 lb/sq.in.) and then immediately falls to zero on application of the brake pedal, a complete loss of nitrogen gas pressure from the accumulator sphere is indicated.
In the event of the nitrogen gas pressure of the accumulator being less than 42 kg/sq.cm. (600 lb/sq.in.) the accumulator sphere must be renewed.

Renew the accumulator sphere (see Section G7m).
Carry out operation 2 to check operation of accumulator.

If the pressure continues to fall after the accumulator has reached the cut-out pressure of between 167 kg/sq.cm. and 177 kg/sq.cm. (2 393 lb/sq.in. and 2 538 lb/sq.in.) and then settled an internal leak is indicated.
If observation of the gauge shows that the pump is still pumping (needle fluctuating with the pump pulses) without giving a rise in pressure then there is a leak equal to the pump flow at that pressure. Pump 'cut-out' indicated by the change of audible note of the pump can be heard if the end of the engine dipstick is placed on top of the pump and used as a hearing aid.

Carry out Operation 3
To verify an accumulator internal leak, or pump malfunction.

The warning lamp(s) remain on.
The hydraulic pressure has built up normally indicating a fault is in the warning lamp circuit.

Check the warning light circuit and rectify as necessary.

Section G18m

Brake and height control hydraulic systems

Systematic check sequence chart

Facia warning lamps 1 BRAKE PRESSURE and/or 2 BRAKE PRESSURE illuminated (Intermittently or continuously)

Sheet 2 of 2

Printed in England

© Rolls-Royce Motors Limited 1980

TSD 4200 March 1980

Printed in England

© Rolls-Royce Motors Limited 1980

Operation 3

Depressurise the system and remove the outlet pipe from the pressure switch three-way connection. Blank off the port using a blank capable of withstanding full hydraulic system pressure.
Start the engine and observe the pressure gauge.
This action separates the accumulator from the rest of the system and allows the accumulator and hydraulic pump to be checked thoroughly.

→ The pressure continues to fall after the accumulator has reached the cut-out pressure of between 167 kg/sq.cm. and 177 kg/sq.cm. (2 393 lb/sq.in. and 2 538 lb/sq.in.) and then settled. The valve has an internal leak.

→ Renew the accumulator valve housing (see Section G7m).
Carry out operation 2 to check accumulator operation.

→ Pressure does not build up at all.
This indicates that the hydraulic pump is not functioning correctly because either the pump is air locked or there is dirt under the pump main delivery valve seat.

→ Stop the engine.
Connect a bleed tube to the bleed screw on the gauge pipe. Open the bleed screw. Run the engine to see if mineral oil flows from the bleed tube.

→ Mineral oil does not flow.
Check that the hydraulic pump is not air locked.
Mineral oil still does not flow.
Close the bleed screw and stop the engine.
Disconnect the low pressure return hose from the accumulator and connect a bleed tube.
Start the engine.
If there is a low pressure return flow, the accumulator valve is faulty.
Renew the accumulator body (see Section G7m)
If there is no low pressure return flow the hydraulic pump is faulty.
Overhaul the hydraulic pump (see Section G6m)
Bleed and re-test the system.

Mineral oil flows
Close the bleed screw and check again. If pressure still does not build up the pump is faulty.
Overhaul the hydraulic pump (see Section G6m)
Bleed and re-test the system.

→ Pressure builds up and cuts off correctly.

→ Carry out Operation 4.

Operation 4

De-pressurise the hydraulic system. Remove the blank previously fitted to the threeway connection and connect the pipe.

→ Blank off the feed to the relevant distribution valve.
Carry out Operation 2.

→ If pressure now builds up normally overhaul the distribution valve as described in Section G9m.
Bleed and re-test the system.

Printed in England

© Rolls-Royce Motors Limited 1984

March 1984

TSD 4200

Chapter H

Sub-frames and suspension

This chapter is in two parts. Part I covers the front sub-frame and suspension and the rear suspension of cars produced prior to car serial number 50 000.

Part II covers the rear sub-frame and suspension fitted to cars produced from car serial number 50 001.

Part I Front sub-frame and suspension and rear suspension.
Applicable to Silver Shadow II, Bentley T2, Silver Wraith II, Corniche and Camargue cars prior to serial number 50 000.

Part II Rear sub-frame and suspension.
Applicable to Corniche and Camargue cars from serial number 50 001.

It should be noted that in Part II all Section, Page and Figure reference are prefixed (m) to denote cars filled with hydraulic system mineral oil.

Chapter H

Part I
Sub-frames and suspension

Applicable to Silver Shadow II, Bentley T2, Silver Wraith II, Corniche and Camargue cars prior to serial number 50 000

Section

H1 Front sub-frame and suspension
H2 Front shock dampers, road springs and ball joints
H3 Compliance assembly, triangle levers, suspension ball joints and stabilizer
H4 Front hubs
H5 Front suspension settings
H6 Bump and rebound stops
H7 Rear crossmember
H8 Rear suspension settings
H9 Rear shock dampers
H10 Rear road springs
H11 General dimensions
H12 Workshop tools

Printed in England

© Rolls-Royce Motors Limited 1984

March 1984

TSD 4200

Chapter H Part I

Issue record sheet 1

April 1984

The dates quoted below refer to the issue date of individual pages within this chapter.

Section	H1	H2	H3	H4	H5	H6	H7	H8	H9	H10	H11	H12
Page No.												
1	Mar 84	Mar 84	Mar 84	Mar 84	Apr 84	Mar 84	Apr 84	Apr 84	Apr 84	Apr 84	Apr 84	Mar 84
2	Mar 84	Mar 84	Mar 84	Mar 84	Apr 84		Apr 84	Apr 84	Apr 84	Apr 84	Apr 84	
3	Mar 84	Mar 84	Mar 84		Apr 84		Apr 84	Apr 84	Apr 84	Apr 84	Apr 84	
4	Mar 84	Mar 84					Apr 84				Apr 84	
5	Mar 84						Apr 84				Apr 84	
6	Mar 84										Apr 84	
7												
8												
9												
10												
11												
12												
13												
14												
15												
16												
17												
18												
19												
20												
21												
22												
23												
24												
25												
26												
27												
28												
29												
30												
31												
32												
33												
34												
35												
36												
37												
38												
39												
40												
41												
42												
43												
44												
45												
46												
47												
48												

Printed in England

© Rolls-Royce Motors Limited 1984

Chapter H Part II

Issue record sheet 1

April 1981

The dates quoted below refer to the issue date of individual pages within this chapter.

Section	H1m	H2m	H3m	H4m	H5m	H6m
Page No.						
1	Apr 81	June 80	June 80	Sept 80	June 79.	Nov 79
2	Apr 81	June 80	June 80	Sept 80	June 79	
3	Mar 80		June 80	Sept 80	June 79	
4	Mar 80			Sept 80	June 79	
5	June 79					
6						
7						
8						
9						
10						
11						
12						
13						
14						
15						
16						
17						
18						
19						
20						
21						
22						
23						
24						
25						
26						
27						
28						
29						
30						
31						
32						
33						
34						
35						
36						
37						
38						
39						
40						
41						
42						
43						
44						
45						
46						
47						
48						

Printed in England

© Rolls-Royce Motors Limited 1981

I.S.D. 4200

Section H1

Front sub-frame and suspension

Introduction
This section describes the removal of the front sub-frame, engine, and torque converter transmission as one unit. Details for removal of the engine only are given in Chapter E.

Before removal, reference should also be made to Chapter C and Chapter G. These chapters give details of the procedures necessary to discharge the air conditioning refrigeration system and depressurize the hydraulic braking and levelling systems. On cars fitted with an exhaust gas emission control system, reference should also be made to Chapter U.

The following operations are the basic requirements for removal of the sub-frame as a complete unit. It should be noted that the operations given relate to varying types of engine and car model. Modifications may also have been introduced as a result of improvements to the vehicle.

Always ensure that all relevant looms, pipes, hoses, etc., are disconnected prior to raising the body from the sub-frame and engine unit.

When disconnecting hose and pipe connections, suitable blanks should always be fitted to prevent the ingress of foreign matter and the loss of lubricants and fuel.

Warning
The hydraulic systems of Corniche and Camargue cars from car serial number 50 001 are filled with hydraulic system mineral oil (LHM).

Use only Hydraulic System Mineral Oil to replenish the braking and levelling systems of these cars.

Do not use Brake Fluids (Castrol RR363, Universal, or any other type). The use of any type of brake fluid, even in very small amounts will cause component failure necessitating extensive

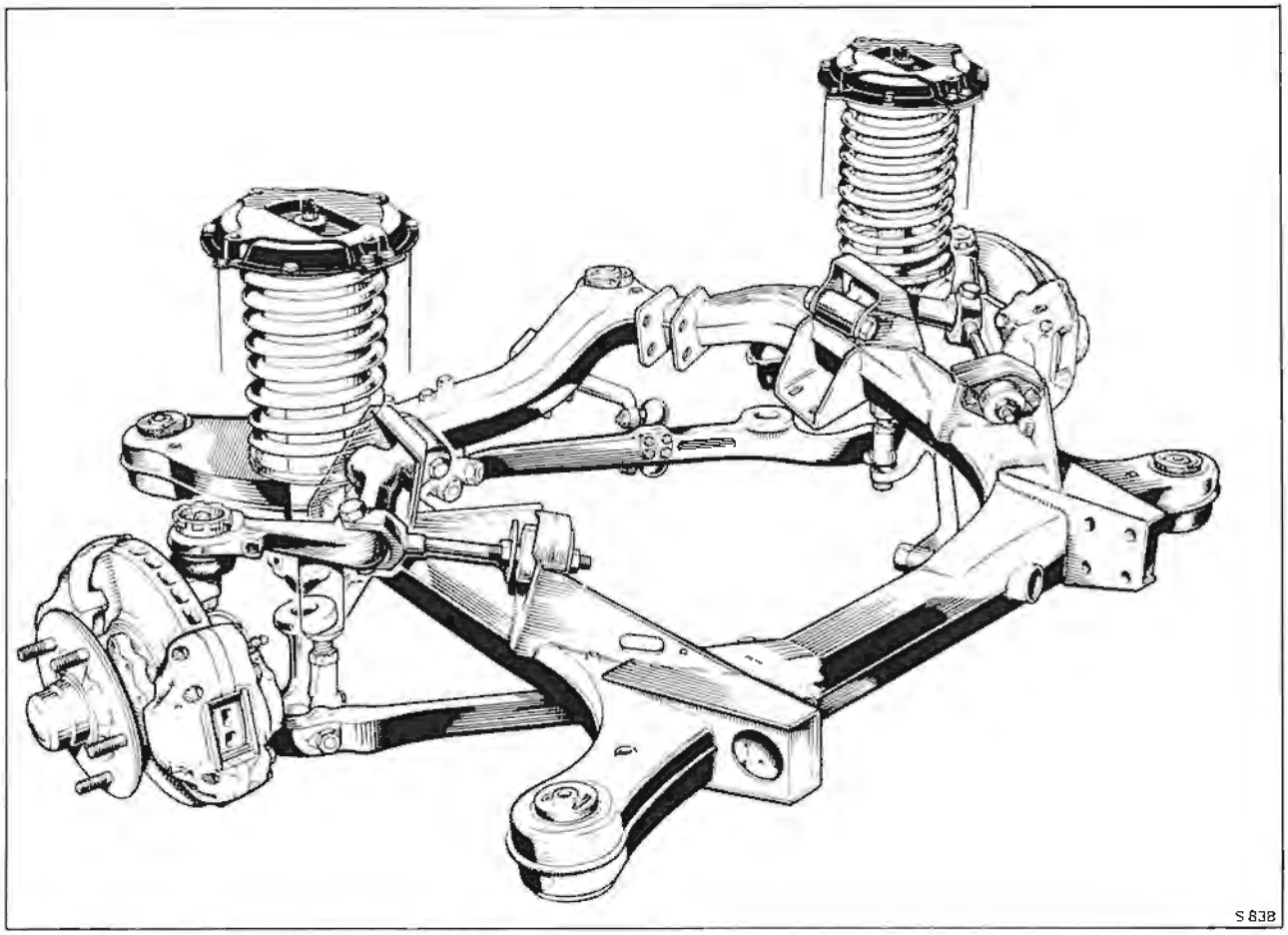

Fig. H1 Front sub-frame and suspension assembly

Printed in England
© Rolls-Royce Motors Limited 1984

rectification to the brake and levelling systems of the car.

Always ensure before fitting any hoses, pipes, etc., that they are suitable for a mineral oil system. For details of correct component identification reference should be made to Chapter G.

Front sub-frame, engine, and torque converter transmission - To remove

1. Reverse the car onto a ramp and chock the rear road wheels.
2. Fit car protection kit (RH 2662), wing covers (RH 2684), and wing cover liners (RH 2685).
3. Discharge the air conditioning refrigeration system as described in Chapter C.
4. Depressurize the hydraulic systems as described in Chapter G.
5. Drain the engine cooling system as described in Chapter L.
6. Switch on the ignition and move the gear range

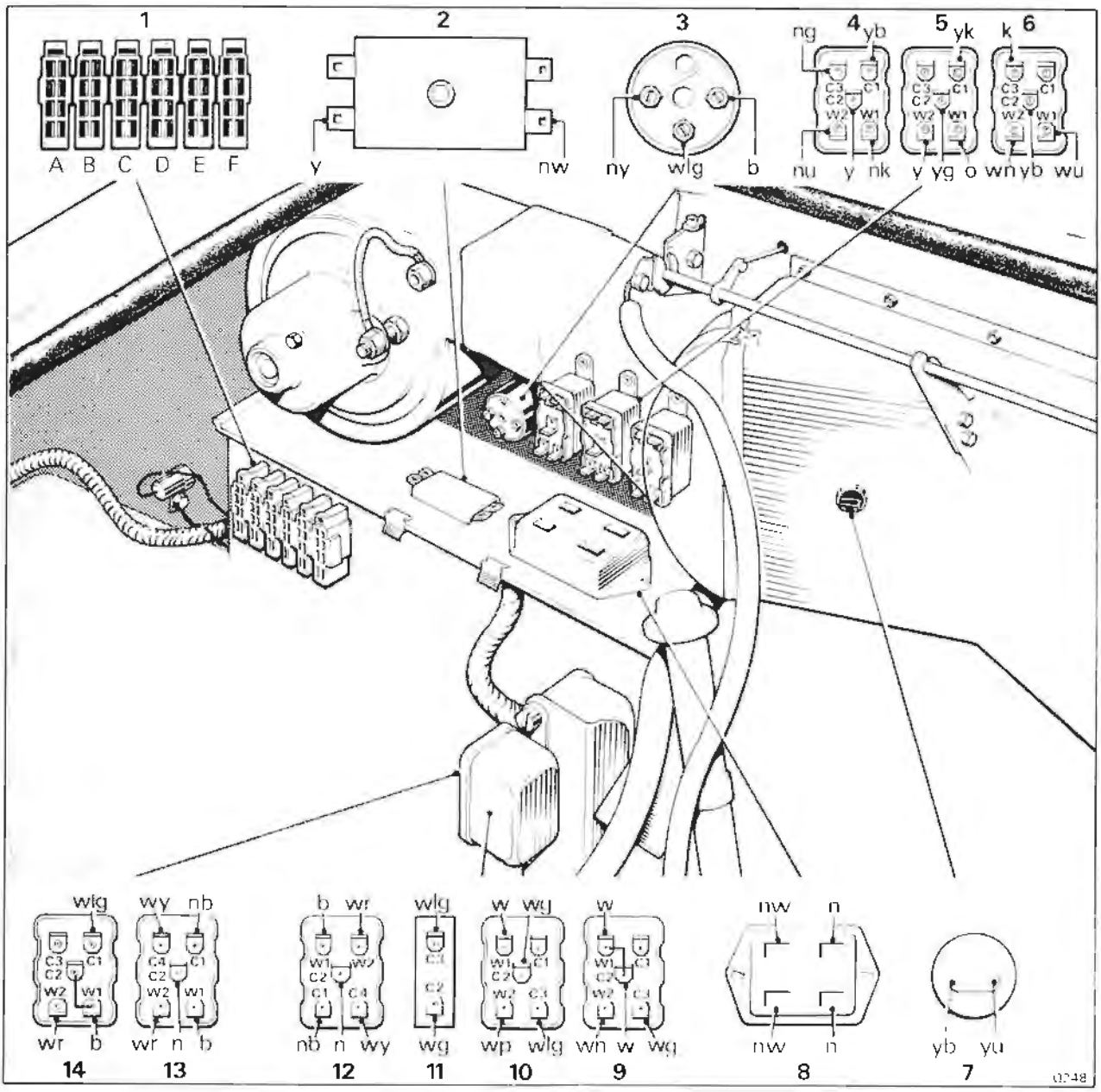

Fig. H2 Electrical disconnection points for engine and sub-frame removal

1 Toeboard sockets D, E, and F
2 Fan and compressor fuse
3 Choke thermal delay
4 Fan and compressor relay
5 Fan delay relay
6 Servo isolation relay
7 Compressor ambient thermostat
8 Ammeter shunt
9 Choke on start relay — On cars with Solex carburetters
10 Choke heater resistor relay — On cars with Solex carburetters
11 Choke heater resistor — On cars with Solex carburetters
12 Starter relay — On cars with Solex carburetters
13 Starter relay — On cars with SU carburetters
14 Choke-on-start relay — On cars with SU carburetters
15 Valance earth and smoothing capacitor

selector to the neutral position. Switch off the ignition.
7. Disconnect the battery.
8. Remove the bonnet as described in Chapter S.
9. Remove the radiator top and bottom hoses; also remove the small hose from the radiator header tank.
10. Remove the engine fan as described in Chapter L.
11. Disconnect the heater tap feed hose from the tap and the heater return hose from the crankcase.
12. Disconnect the two refrigeration pipes from the rear of the compressor.
13. Clamp the hydraulic system reservoir to brake pump hoses to prevent reservoir drainage, then disconnect the hoses from the pump inlet pipes. Fit blanks to the pipe ends.
14. Disconnect the steering pump to oil cooler hoses. Allow the oil to drain into a container.
15. On cars fitted with SU carburetters remove the air intake and hot air intake trunks. Disconnect the vacuum hose from the air blending valve.
16. On cars fitted with Solex carburetters, remove the air cleaner assembly.
17. On cars fitted with petrol injection engines, remove the air intake trunk and air meter adapter.
18. Disconnect the body to engine fuel hoses.
19. Disconnect the accumulator to body hoses.
20. Disconnect the sub-frame to body hydraulic system hoses.
21. Disconnect the accelerator down rod from the equalizer linkage. Remove the setscrews securing the equalizer bracket to the body, and the equalizer pivot bolt. Remove the equalizer bracket.
22. Disconnect the relevant electrical connectors (see Fig. H2).
23. On left-hand drive cars, disconnect the parking brake front cable from the equalizer assembly. Release the outer cable from its securing bracket on the centre body member. Detach the cable clips and move the cable away from the transmission.
24. Disconnect the propeller shaft from the transmission unit as described in Chapter F.
25. Disconnect the gearchange actuator loom and speedometer transmitter connection.
26. Remove the two bolts securing the steering link to the steering column.
27. Disconnect the two transmission to oil cooler flexible pipes situated on the right-hand side of the transmission unit. Allow the oil to drain into a container.
28. On left-hand drive cars, remove the accelerator cross-shaft.
29. On right-hand drive cars, remove the accelerator lever securing bolt and slide the lever along the pivot shaft, away from the transmission unit filler tube.
30. Remove the front sections of the exhaust system.
31. Disconnect the sub-frame to body earth braids.
32. Detach the mixture weakener and emission canister (if fitted) hoses on the left-hand valance.
33. Remove the front road springs as described in Section H2. Fit the wooden support blocks (see Fig. H3) between the bump stop and the lower triangle levers. Lower the car onto its wheels ensuring that the wooden blocks remain in position.
34. Ensure that all relevant components have been

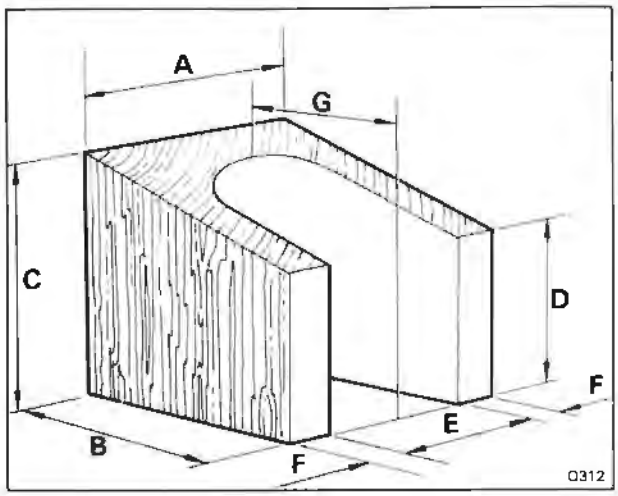

Fig. H3 Wooden support block
A, B and C 76 mm. (3 in.)
D 51 mm. (2 in.)
E 38 mm. (1½ in.)
F 19 mm. (¾ in.)
G 57 mm. (2¼ in.)

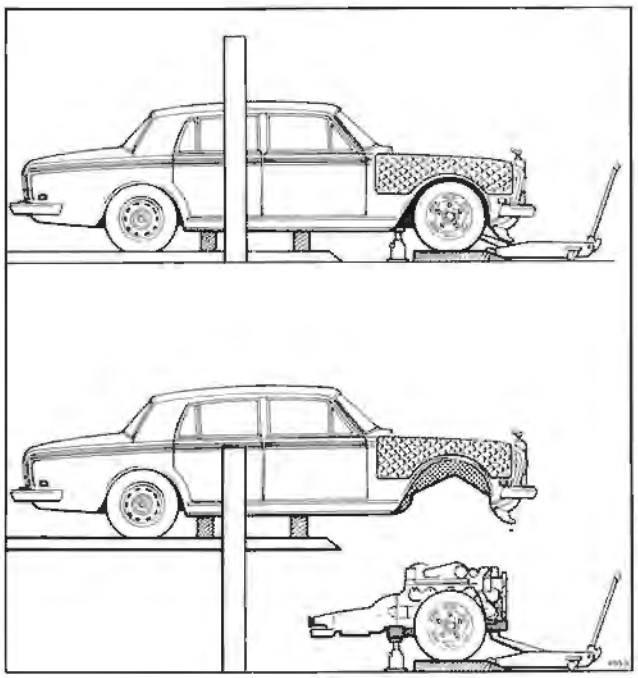

Fig. H4 Sub-frame, engine, and transmission unit removal

disconnected and that any component that will prevent the raising of the car body off the sub-frame and engine unit has been removed.

The sub-frame mounting bolts should not be removed at this stage.
35. Lower the ramp to the ground. Carefully push the car forward off the ramp, until the front of the car overhangs the ramp sufficiently to allow the ramp to be raised, without any crossbeam or part of the ramp fouling the transmission unit (see Fig. H4). Place

Printed in England
© Rolls-Royce Motors Limited 1984
March 1984
TSD 4206

blocks beneath the car body sills as far forward as possible to maintain the body on the ramp in the horizontal position (see Fig. H4).

37. To prevent any possibility of the body pivoting forward when the ramp is raised, secure the rear of the car to the ramp by passing ropes over the final drive crossmember on each side of the axle case and suitably securing them to the ramp. This can be achieved for example, by placing a steel bar across the underside of the ramp and securing the ropes to the bar.

38. Place a jack beneath the rear crossmember of the front sub-frame and also beneath the front triangle lever mounting bracket.

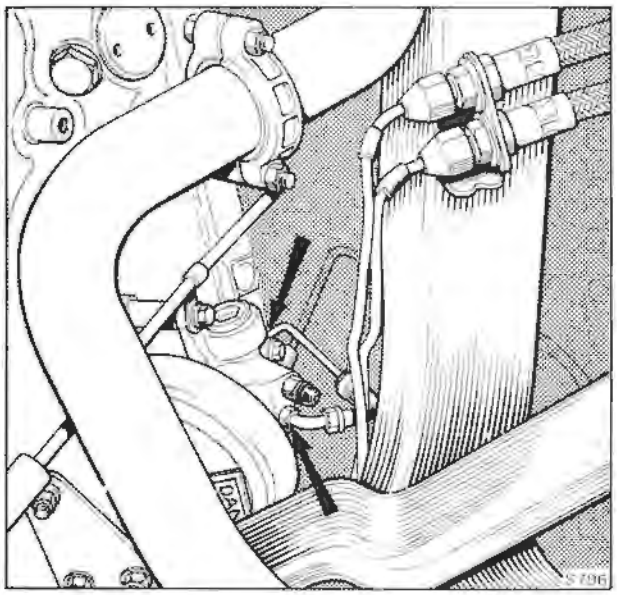

Fig. H5 Hydraulic accumulator disconnection points

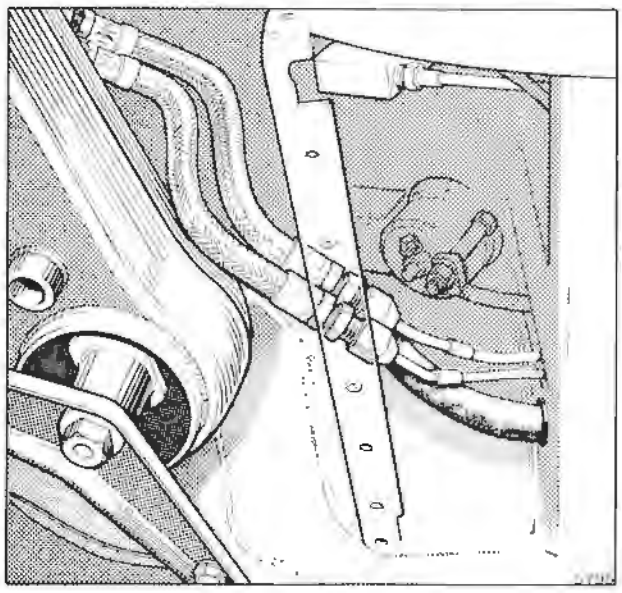

Fig. H6 Disconnection point of sub-frame to body hydraulic pipes (right-hand drive cars)

39. Carefully remove the bolts and setscrews securing the front sub-frame to the body. Note the positions and quantities of the mount washers.

40. Ensure that all relevant components have been disconnected and that clearance between the sub-frame and engine unit, and the car body has been obtained. Slowly raise the ramp, thus lifting the body off the sub-frame and engine unit. During this operation, continuous observations should be made to ensure that clearance is maintained and that hose or loom connections between the body and the sub-frame and engine unit have not been overlooked. When the body is clear of the engine, fully raise the ramp and carfully wheel the sub-frame and engine unit from beneath the car.

41. Lift the sub-frame and engine unit onto a suitable stand.

Engine and torque converter transmission - To remove from the sub-frame

1. Disconnect the steering pump supply hose from the steering rack. Allow any oil to drain into a container.

2. Carfully position two slings around the engine, one at the front of the crankcase and one at the rear of the transmission casing. Using a overhead hoist, take the weight of the engine and transmission on the slings. Always ensure before taking the full engine load that the slings are not in positions that may cause damage to engine or transmission components.

3. Disconnect the front and rear engine mounts.

4. Carefully check that nothing will impede the removal of the engine, then, lift the engine and transmission unit from the sub-frame. Note the position of the front engine mount stop plate and any other packing plates that may be fitted to the engine mounts.

5. If the front engine mount crossmember or the rear engine mount brackets are to be removed, corelation marks should be made between the component and the sub-frame. These marks will enable the crossmember and mounting brackets to be correctly positioned and the engine to be centralized in the sub-frame when assembly is carried out.

Engine and torque converter transmission - To fit into the sub-frame

Fit the engine and transmission unit into the sub-frame by reversing the removal procedure noting the following.

1. Attach the front and rear engine mounts, together with any packings that may have been removed, to the engine prior to lowering the engine into the sub-frame. Do not tighten the bolts at this stage.

2. Lower the engine and transmission unit into the sub-frame and fit the bolts securing the engine mounts to the sub-frame. Centralize the engine in the sub-frame then tighten the mounting bolts. Set the stop plate gap on the front engine mount to between 1,52 mm. and 1,77 mm. (0.060 in. and 0.070 in.).

3. Fit any components that will not prevent the car body being lowered onto the sub-frame.

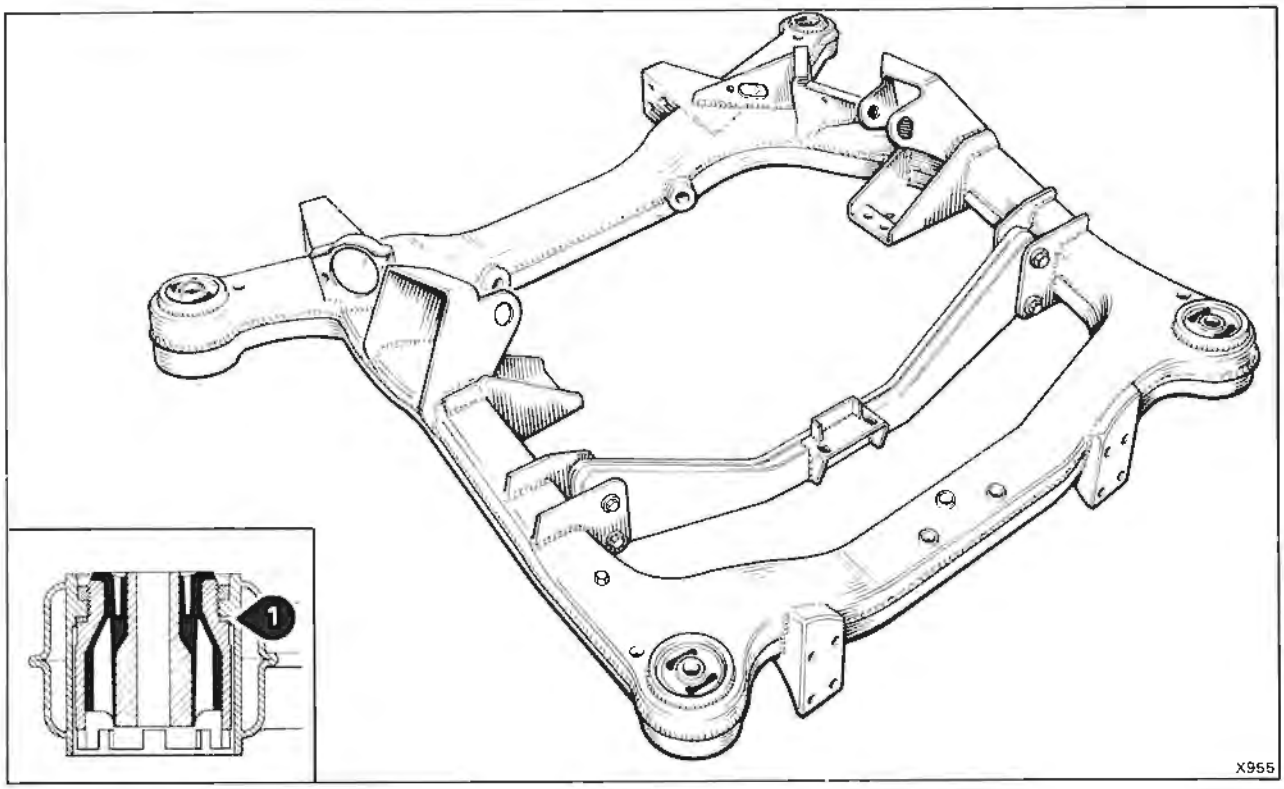

Fig. H7 Front sub-frame assembly
Inset 1 Resilient mount spacer (if fitted)

Engine, torque converter transmission, and sub-frame - To fit into the car

Fit the engine, torque converter transmission, and sub-frame to the body by reversing the removal procedure noting the following.

1. The sub-frame mounting points in the body have a limited amount of movement to allow for centralization of the sub-frame. Ensure that the plain bobbin (front mounts) and threaded bobbin (rear mounts) are free in the longeron to allow sub-frame adjustment to be carried out.

2. Inspect all relevant pipes and hoses prior to fitting the sub-frame into the body and renew any that show signs of deterioration or damage.

3. When fitting the sub-frame to the body mounting points, ensure that the main bearing washer for each mount is in position, together with any additional washers that may have been fitted in order to correct individual differences of the mounting points.

4. With the engine and sub-frame positioned in the engine compartment, assemble the rear steady brackets onto the rear mount centre setscrews, together with any washers previously removed.

Pass the setscrews through the sub-frame mounts and screw them into the threaded body mount bobbins. Fit the bolts, nuts, and washers which secure the steady brackets to the body. Fit the front mounting bolts in a similar manner. Do not tighten the mounting bolts at this stage.

Note

If during dismantling, the upper nut from the front mounting stud is removed, it must be torque tightened onto the stud to the standard torque figure quoted in Chapter P. This must be done before locating the stud through the body longeron.

5. Centralize the sub-frame by utilizing the movement in the body mounting bobbins. To check the sub-frame position, diagonal and parallel measurements should be taken from the jig location points on the rear sub-frame, to the jig location points on the front sub-frame (see Fig. H29). With the sub-frame centralized, torque tighten the sub-frame mounting bolts and setscrews.

6. Connect the steering column ensuring that the road wheels and steering wheel are in the straight ahead position. Refer to Chapter N for details.

7. Torque tighten all relevant nuts, bolts, and setscrews. Always refer to the special torque figure sections of Chapter P for the correct torque requirements.

8. Fill the engine coolant system and check the engine, torque converter transmission, and steering pump oil levels as described in their respective chapter.

9. Bleed the hydraulic systems as described in Chapter G.

10. Charge the refrigeration system as described in Chapter C.

11. Check all components for leaks and ensure that the necessary clearances have been obtained.

12. Check the standing height of the car as described in Section H5.

13. Ensure the front engine mount stop plate setting is between 1,52mm. and 1,77mm. (0.060in. and 0.070in.). Adjust if necessary.

Printed in England
© Rolls-Royce Motors Limited 1984
March 1984
TSD 4200

Sub-frame mount - To remove

The sub-frame mounts can be changed with the sub-frame in position.

1. Position the car on a ramp.
2. Apply the parking brake and chock the rear wheels.
3. Raise the bonnet and fit protective covers and liners on the wings.
4. Support the car body with sill blocks.
5. Fit spring retention tool (RH 8809) onto the road spring nearest to the mount being renewed. Adjust the tool until sufficient pressure is applied to support the road spring.

Warning

Always examine the spring retention tool components for signs of thread wear or damage prior to its use. If you have doubts concerning any parts of the tool and their ability to withstand spring load you should renew those parts.

It is recommended that the use of the tool is restricted to a maximum of 200 applications.

6. Position a jack,as near as possible to the mount being renewed, to support the sub-frame.
7. Remove the bolts securing the mounting point steady bracket to the body.
8. Remove the centre setscrew or bolt (dependent on whether it is a front or rear mount) from the mount. Note the position and quantity of spacing washers that are fitted.
9. Carefully lower the jack situated beneath the sub-frame until sufficient clearance is obtained between the mount and the body to gain access to the mount lock-ring.
10. Using spanner (RH 8576) to restrain the lock-ring, unscrew the mount using spanner (RH 7774) on ther lower castellations of the mount.
11. Remove the spacer (if fitted) from the mount.

Sub-frame mount - To fit

1. Ensure that the bore, and upper face of the sub-frame, the threads and faces of the lock-ring, and the threads of the mount are clean.
2. Place the spacer (if fitted) over the thread of the mount. Apply Molytone C grease to the threads of the mount. Ensure the top three or four threads are covered. Do not use mineral based grease as it can have a detrimental effect on the rubber of the mount.
3. Insert the mount through the sub-frame and fit the lock-ring into position in the upper well. Screw the mount into the lock-ring. Adjust the lock-ring such that, when the rubber mount is torque tightened to the figure quoted in Chapter P, the slots in the moulded rubber are at right angles to the centre line of the sub-frame (see Fig. H7).
4. Secure the sub-frame to the body by reversing the removal procedure. Ensure that all the nuts and setscrews are torque tightened to the figures quoted in Chapter P.

Section H2

Front shock dampers, road springs, and damper ball joints

Printed in England
© Rolls-Royce Motors Limited 1984

Introduction
The shock dampers are of the sealed unit type and no servicing is required. In the event of a damper becoming faulty, it should be discarded and a new damper fitted.

Each damper contains nitrogen gas under pressure and under no circumstances should it be subjected to undue force. Do not clamp the damper in a vice.

If the road spring support collar has seized to a faulty damper, the collar should be discarded with the damper. Do not attempt to hammer the collar from the damper.

Front road spring and damper - To remove

1. Drive the car onto a ramp; apply the parking brake and chock the rear wheels.
2. Fit the support plate halves of the road spring retention tool (RH 8809), around the lower section of the damper.

Insert the four long studs of the tool through the upper spring plate and screw them securely into the tool support plate. Fit the special nuts, thrust races, and washers to the top of each stud.

Warning
Always examine the spring retention tool components for signs of thread wear or damage prior to their use. If you have doubts concerning any parts of the tool and their ability to withstand spring load you should renew those parts.

It is recommended that the use of the tool is restricted to a maximum of 200 applications.

3. Evenly tighten the four spring retention tool nuts to retain the road spring in its compressed condition.
4. Support the front of the car body on sill blocks.
5. Remove the bolts securing the upper spring plate to the body spring tower. Use hand pressure on the spring plate to counteract any damper lift and to allow removal of the bolts.
6. Remove the split pin, castellated nut, and washer securing the damper ball pin assembly to the lower triangle levers.

Using extractor tool (RH 8100) release the ball pin taper from the triangle levers. Leave the taper loosely in position to support the damper.

7. Carefully lift the road spring and damper assembly from the car.

Place the complete assembly into spring compression tool (RH 7909). Fit and secure the top plate of the tool to retain the spring (see Fig. H10).

8. Remove the nuts securing the damper to the upper spring plate cover. Collect the rubber mount and washers. Withdraw the damper from the spring support plate and collar.

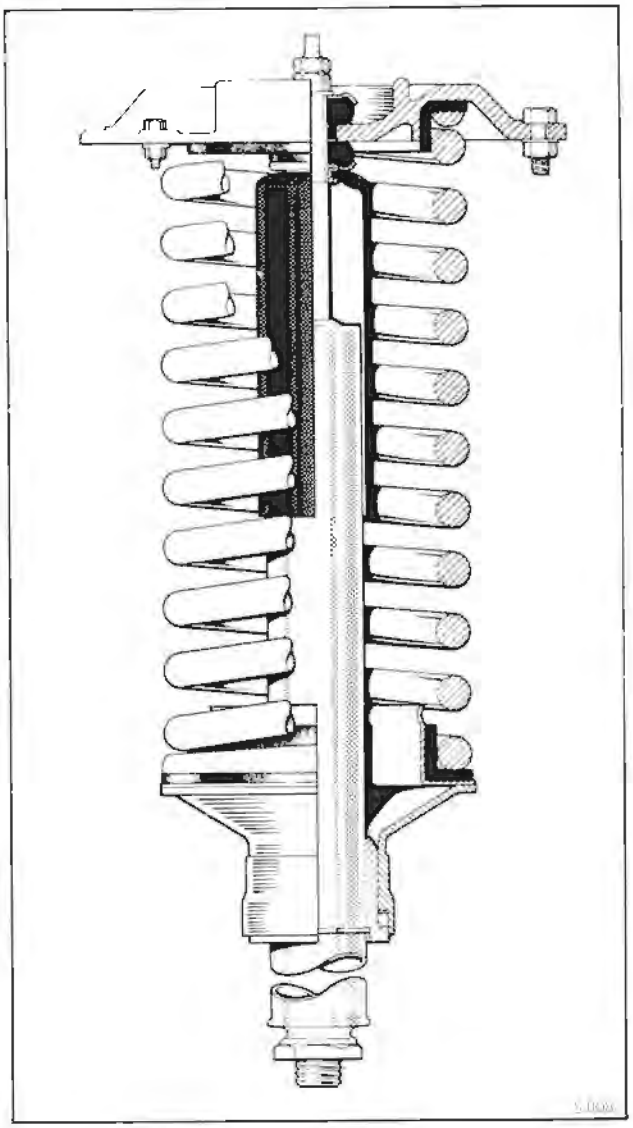

Fig. H8 Front shock damper and road spring arrangement

9. To release the spring from the retention tool, compress the spring until the spring load is relieved from the retension tool, allowing the removal of the four retaining nuts.

Measure the distance between the two plates of the spring compression tool to facilitate assembly.

Evenly release the two nuts on the compression tool until the spring is fully released.

10. Examine all the components for serviceability and renew as necessary.

March 1984
TSD 4200

Front road spring and damper - To fit

Fit the road spring and damper by reversing the removal procedure. The road spring and damper can be assembled as a bench operation as follows.

1. Ensure that all the components are in a serviceable condition. Renew any components that are faulty.
2. Remove the protective cover from the damper stem.
3. Smear the bore of the spring support collar with grease. Locate the collar onto the damper and fit the protective cover, mounting washer, and rubber to the top of the damper stem.
4. Place the road spring and its associated components (see Fig. H10) into spring compression tool (RH 7909). Compress the spring to the measurement taken on removal.
5. Insert the damper into the spring assembly. Ensure that all the components are correctly located, then fit the top rubber mount, distance piece, cup washer and plain washer onto the damper stem. Fit and torque tighten the retaining nut and lock-nut.
6. Smear the spring support plate collets with an approved grease and fit them around the damper collar. Carefully release the spring compression tool, thus allowing the damper collar and collets to be drawn into the spring support plate. Do not completely remove the spring compression tool.

Note

Always fit the thinnest collets to the top of those selected (see Fig. H9). The original thickness of collets should be used if the original spring is fitted.

For spring poundage information refer to Page H2-3.

7. Fit the spring retention tool (RH 8809) to the spring assembly to retain the spring in its compressed

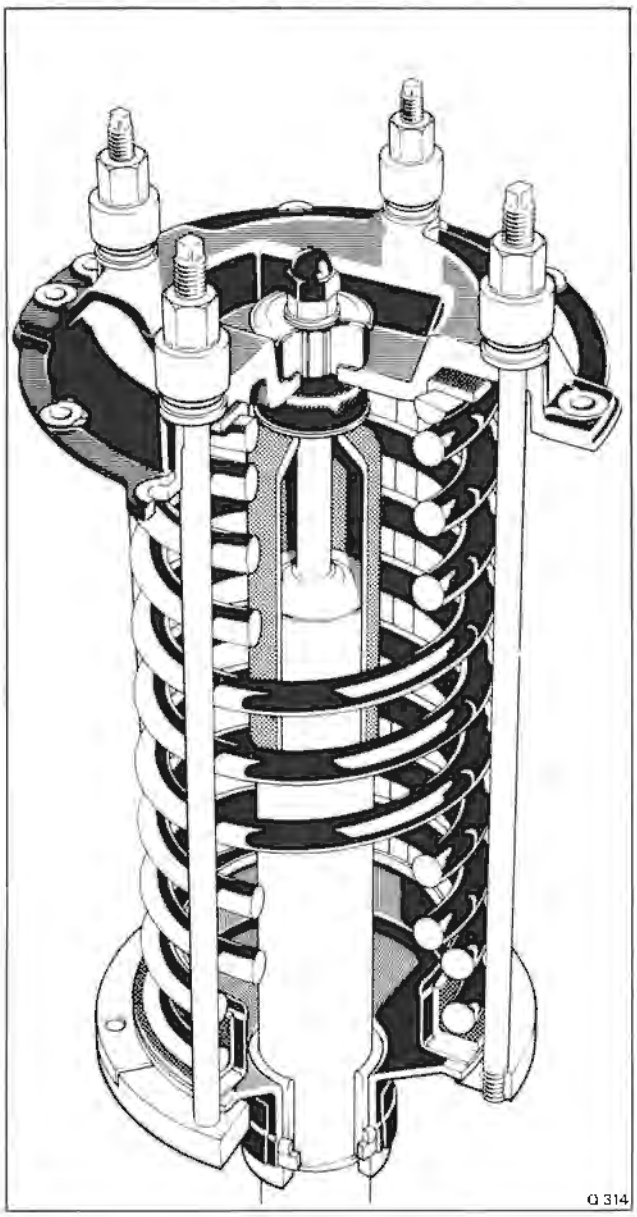

Fig. H9 Spring retaining tool in position

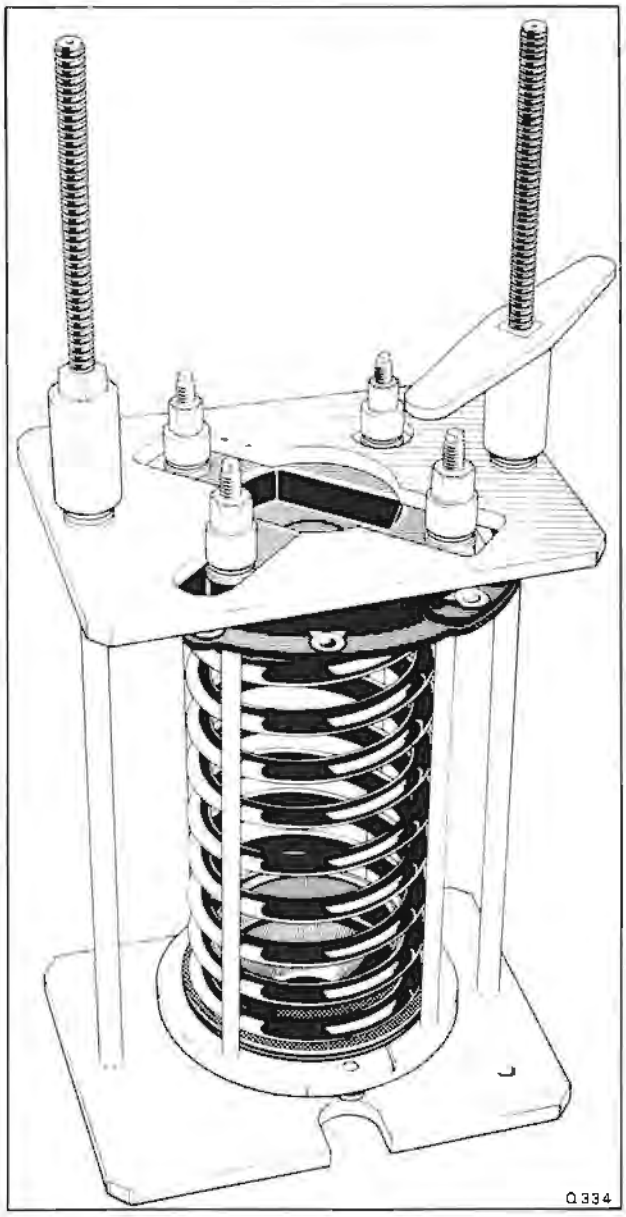

Fig. H10 Spring compression tool

Front spring loading chart	Cars other than those conforming to a North American specification		Cars conforming to a North American specification	
	kgf	lbf	kgf	lbf
Silver Shadow II and Bentley T2	822	1835	846	1865
Silver Wraith II	846	1865	878	1935
Corniche Saloon	822	1835	846	1865
Corniche Convertible	862	1900	878	1935
Camargue	862	1900	878	1935

Equivalent load from packing collets									
Packing thickness	mm	1,63	3,25	4,88	6,35	7,98	9,60	11,23	12,70
	in	0.064	0.128	0.192	0.250	0.314	0.378	0.442	0.500
Spring load increase	kgf	5,44	10,89	16,78	21,77	27,22	32,66	38,10	43,54
	lbf	12	24	37	48	60	72	84	96
Packing thickness	mm	14,33	15,95	17,58	19,05	20,67	22,30	23,93	25,40
	in	0.564	0.628	0.692	0.750	0.814	0.878	0.942	1.00
Spring load increase	kgf	48,99	54,43	59,87	64,86	70,31	76,20	81,65	86,64
	lbf	108	120	132	143	155	168	180	191

Note
A packing thickness of 6,35 mm. (0.250 in.) will increase or decrease the height of the car by approximately 9,5 mm. (0.375 in.)

condition. Remove compression tool (RH 7909).
8. Fit the ball joint assembly to the damper.
9. Carefully lower the spring and damper assembly into the body.
10. Locate the damper ball joint taper into the triangle levers. Fit and torque tighten the castellated nut and insert a new split pin.
11. Bolt the upper spring plate to the body.
12. Carefully release and then remove the spring retention tool. Ensure that the collets are correctly entered into the spring support plate during removal.
13. Remove all jacks and support blocks.
14. After fitting the spring and damper assembly, remove the car from the ramp and drive it back and forth to allow the assembly to settle.
15. If the road spring has been renewed, check the car standing height as described in Section H5.

Damper ball joint - To remove
1. Carry out Operations 1 to 3 inclusive of Front road spring and damper - To remove.
2. Remove the split pin, castellated nut, and washer securing the ball joint.
3. Using extractor tool (RH 8100) release the ball joint taper from the triangle levers.
4. Raise the front of the car until the ball joint taper clears the ball pin carrier. Remove the ball joint from the damper.

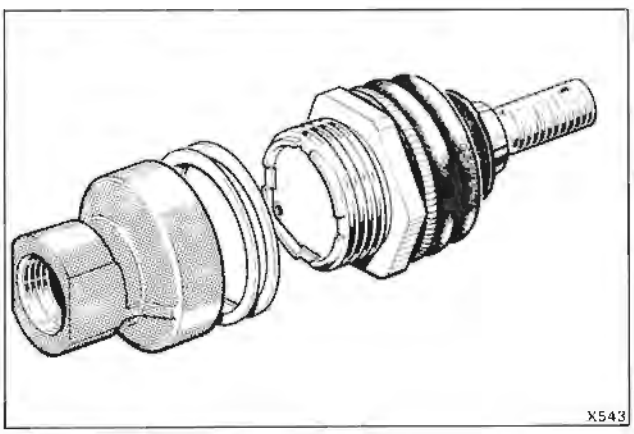

Fig. H11 Damper ball pin assembly

5. Unscrew the ball pin assembly from its housing taking care not to damage the protective rubber boot. Collect the pre-load adjustment shims (see Fig. H11).
6. Examine the ball joint for wear. Pre-load shims should not be removed to take up wear. Always fit a new ball pin assembly.

Damper ball joint - To assemble and fit
1. Ensure the components are in a serviceable condition.

Printed in England
© Rolls-Royce Motors Limited 1984
March 1984
TSD 4200

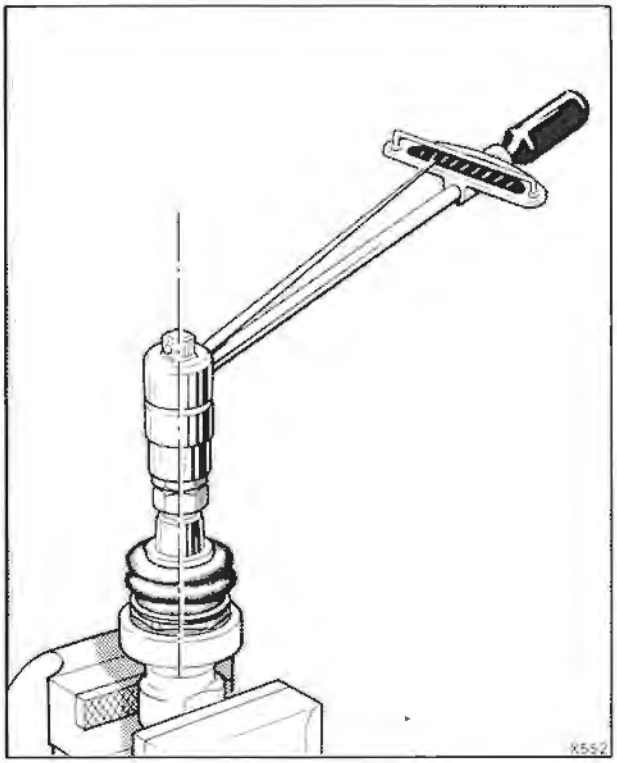

Fig. H12 Checking the ball joint pre-load

2. Hold the ball joint housing in a vice. Screw the new ball joint assembly into the housing without fitting the pre-load shims. Fit and lock together two nuts onto the ball pin (see Fig. H12).
3. Carefully tighten the ball joint into the housing until a torque of between 0,35 kgf. m. and 0,69 kgf. m. (30 lbf. in. and 60 lbf. in.) is required to rotate the ball pin. This torque figure should be measured after the ball pin has been rotated through four complete revolutions and with the ball pin in its vertical position.
4. Measure the gap between the ball joint face and the housing face.
5. Remove the ball joint from the housing and fit shims equivalent to the gap previously measured, onto the ball joint.
6. Fit the ball joint and shims to the housing and torque tighten the assembly to the figure quoted in Chapter P.
7. Check that the torque required to rotate the ball pin is within the limit given in Operation 3. If necessary make adjustments by increasing or decreasing the shim thickness to obtain the correct torque reading.
8. Fit and torque tighten the ball joint assembly onto the damper.
9. Secure the ball joint to the triangle levers and complete the operations by reversing the removal procedure.

Section H3

Compliance assembly, triangle levers, suspension ball joints, and stabilizer

Lower triangle levers - To remove

1. Ensure that the gear selector lever is in the Park position and apply the parking brake.
2. Remove the wheel trim from the respective wheel and slacken the wheel nuts.
3. Jack up the front of the car and place sill blocks beneath the front end of the body sills to support the car.
4. Remove the road wheel.
5. Place a jack under the lower triangle levers and jack up the suspension to partially compress the road spring. Ensure the body is still supported by the sill blocks.
6. Fit the support plate halves of the road spring retension tool (RH 8809) around the lower section of the damper and secure them together.

Insert the four long studs of the tool through the upper spring plate and screw them securely into the tool support plate.

Fit the special nuts, thrust races, and washers to the top of each stud (see Fig. H9).

Warning

Always examine the spring retention tool for signs of thread wear or damage prior to its use. If you have doubts concerning any parts of the tool and their ability to withstand spring load you should renew those parts.

It is recommended that the use of the tool is retricted to a maximum of 200 applications.

7. Evenly tighten the retaining tool nuts until the road spring is fully supported.
8. Slacken the large nuts securing the lower triangle levers to the sub-frame pivot bushes (see Figs. H13 and H14).
9. Disconnect the stabilizer bar from the front triangle lever as described under Front stabilizer bar - To remove.
10. Remove the split pin and castellated nut securing the front shock damper ball joint. Using extractor tool (RH 8100) release the ball joint taper. Lower the triangle levers to allow the taper to be withdrawn from the ball joint carrier.

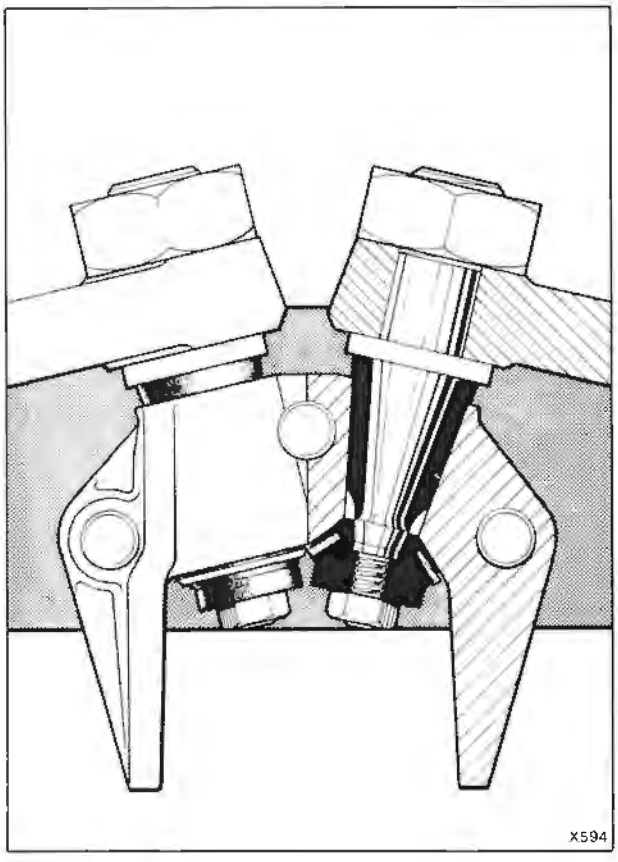

Fig. H13 Front triangle lever mounts

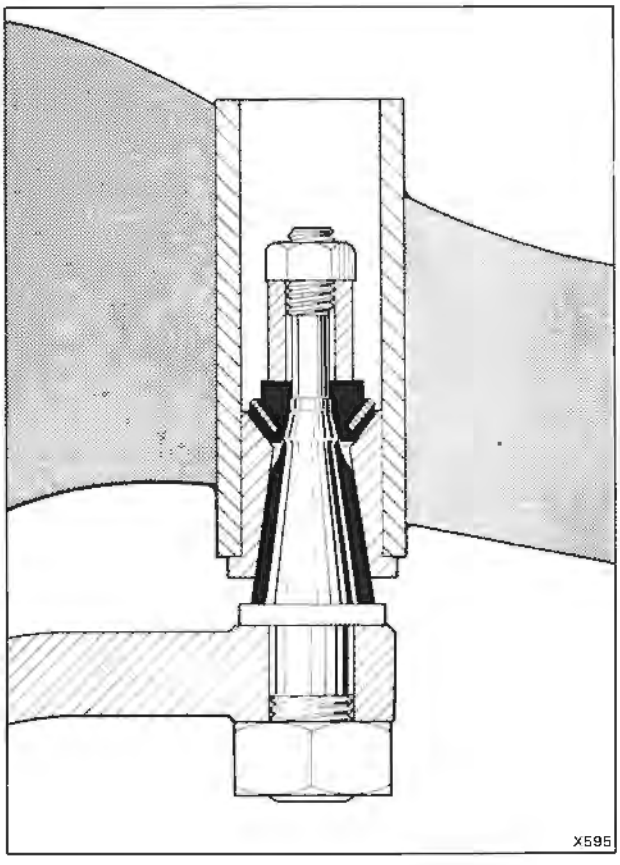

Fig. H14 Rear triangle lever mount

Printed in England
© Rolls-Royce Motors Limited 1984

11. Support the hub assembly with a jack.
12. Remove the split pin and castellated nut securing the lower suspension ball joint to the yoke. Using extractor tool (RH 8100) release the ball joint taper.
13. Remove the dowel bolt and setscrew securing the triangle levers to the ball pin carrier. Collect the carrier and steering lock stop (if fitted).
14. Remove the large nuts from the triangle lever pivot bushes and remove the triangle levers.
15. Examine the pivot bushes for serviceability and renew if necessary.

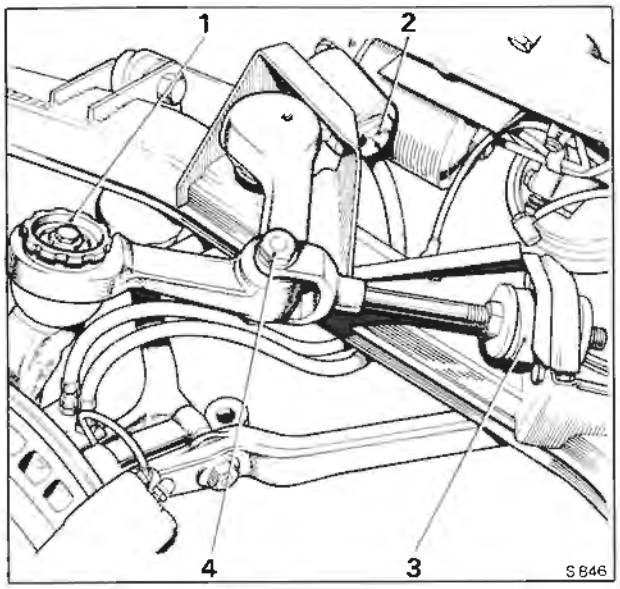

Fig. H15 Upper levers assembly (damper dismantled)
1 Ball joint upper ring nut
2 Eccentric bolt showing correct (below centre line) arrow position
3 Compliance mount
4 Jaw and rod assembly

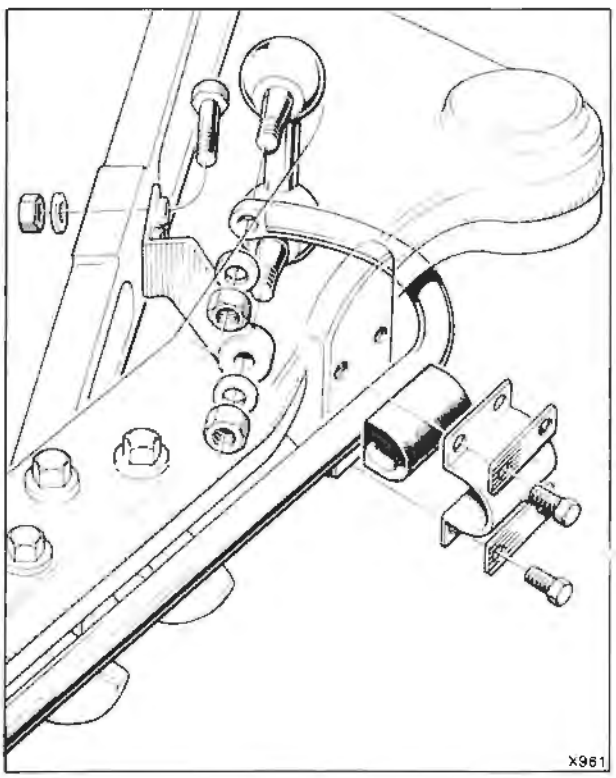

Fig. H16 Front stabilizer components

Lower triangle lever bushes - To renew
1. Remove the lower triangle levers as described under Lower triangle levers - To remove.
2. To remove the bushes, remove the retaining nut and collect the conical seat and distance piece (rear mounts only). Withdraw the pivot bush from its housing.
3. Fit the new bushes by reversing the removal procedure.

Lower triangle levers - To fit
1. Assemble the triangle levers onto the pivot bushes as shown in figures H13 and H14. Do not tighten the large retaining nut.
2. Fit the ball pin carrier between the triangle levers, then fit and torque tighten the dowel bolt and setscrew together with the lock stop plate (if fitted). Do not attach the damper ball joint to the carrier.
3. Set the triangle levers in their normal ride position.
4. Torque tighten the large triangle lever mount nuts to the figure quoted in Chapter P.
5. Complete the assembly by reversing the removal procedure.

Compliance lever - To remove
1. Carry out Operations 1 to 7 inclusive as described under Lower triangle levers - To remove.
2. Remove the split pin and castellated nut retaining the upper ball pin.
3. Support the hub with a jack and using extractor tool (RH 8100) release the ball pin taper from the yoke.
4. Remove the bolt securing the compliance rod jaw to the compliance lever.
5. Note the position of the arrow on the compliance lever pivot bolt (see Fig. H15). Remove the bolt and withdraw the lever from the sub-frame bracket. Collect the special washers.
6. Examine the rubber bushes and ball joint for serviceability and renew as necessary.

Compliance lever - To fit
Fit the compliance lever by reversing the removal procedure noting the following.
1. Ensure that the eccentric adjusment components on the compliance lever pivot are correctly located in the sub-frame bracket. Turn the bolt until the arrow is in the position noted on removal.
2. Check the wheel caster and camber as described in Section H5.

Compliance rod mount - To renew
1. When renewing the compliance mount adjacent to the starter motor, the battery must be disconnected.
2. Remove the nut and large washer from the rear of

the compliance mount. **Do not** disturb the position of the outer nut. If this nut is undisturbed, it should not be necessary to check the caster and camber settings after completion of the mount renewal operations.
3. Remove the two bolts securing the compliance mount to the sub-frame and withdraw the mount.
4. Remove the bolt securing the compliance rod jaw to the lever. Examine the bush for serviceability and renew if necessary.
5. Fit the new compliance mount and components by reversing the removal procedure. Ensure that the large washer is fitted with the concave side towards the mount.
6. Torque tighten the nuts to the figures quoted in Chapter P
7. If the position of the outer compliance rod nut has been moved the caster and camber should be checked as described in Section H5 and adjusted as necessary.

Suspension ball joints - To renew
Prior to commencement of the following operations the spring retention tool (RH 8809) should be fitted as described in Operations 1 to 7 inclusive of Lower triangle levers - To remove.

Upper ball joint
1. Using the tube spanner (RH 7775) remove the locking ring from the top of the ball joint.
2. Remove the split pin and castellated nut from the ball pin.
3. Support the hub with a jack, and using extractor tool (RH 8100) release the ball pin taper from the yoke.
4. Fit extractor tool (RH 7768) onto the compliance lever and carefully press the ball joint out of the lever.
5. Carefully place the new ball joint into position on the underside of the compliance lever. Using the extractor tool (RH 7768) as the insertion tool, draw the ball joint into the lever.
6. Fit and torque tighten the locking ring to the figure quoted in Chapter P.
7. Complete the assembly by reversing the removal procedure.

Lower ball joint
1. Depressurize the hydraulic braking systems as described in Chapter G.
2. Disconnect the two brake hoses from the rear of the front hub. Fit blanks to the hoses and pipe ends.
3. Remove the split pin and castellated nut from the track rod end. Using extractor tool (RH 8100) release the ball pin taper from the side steering lever.
4. Remove the split pin and castellated nut from the upper ball pin.
5. Support the hub with a jack and using extractor tool (RH 8100) release the upper ball pin taper from the yoke.
6. Remove the split pin and castellated nut from the lower ball pin.
7. Using extractor tool (RH 8100) release the lower ball pin taper from the ball pin carrier. Lift the yoke and hub assembly from the car.
8. Remove the ball joint assembly and housing from the yoke.
9. Remove the ball joint from the housing and collect the shim washers.
10. Thoroughly clean the housing and shim washers.
11. Enter the new ball joint into the housing without fitting the shim washers. Fit and lock together two nuts onto the ball pin.
Note
The ball joint is supplied as a complete assembly and is pre-packed with lubricant.
12. Carefully tighten the ball joint until a torque of 0,40 kgf.m. and 0,86 kgf.m. (35 lbf.in. and 75 lbf.in.) is required to rotate the ball. This torque figure should be measured after the ball has been rotated through four complete revolutions, and with the ball pin in its vertical position.
13. Measure the gap between the ball joint face and the housing.
14. Remove the ball joint from the housing and fit shims, equivalent to the gap previously measured, onto the ball joint.
15. Fit the ball joint and shims to the housing and torque tighten the assembly to the figure quoted in Chapter P.
16. Check that the torque required to rotate the ball pin is within the limits given in Operation 12. If necessary make adjustments by increasing or decreasing the shim thickness to obtain the correct torque reading.
17. Fit and torque tighten the ball joint assembly into the yoke to the figure quoted in Chapter P.
18. Fit the yoke and hub assembly by reversing the removal procedure.
19. Bleed the braking system as described in Chapter G.

Front stabilizer - To remove
1. Remove the nuts and washers securing the stabilizer links to the triangle lever brackets and stabilizer bar
2. Using extractor tool (RH 8019) separate the tapers of the stabilizer links from their locations. Remove the links.
3. Remove the setscrews and bolts securing the stabilizer bar mounts to the sub-frame.
4. Remove the brackets and stabilizer bar. Collect the towing brackets (if fitted).
5. Examine the rubbers of the mounts and links for serviceability and renew as necessary.

Front stabilizer - To fit
Fit the stabilizer by reversing the removal procedure noting the following.
1. Set the suspension triangle levers to the normal ride position.
2. Attach the stabilizer links to the triangle levers and the stabilizer. Do not tighten the securing nuts.
3. Fit the stabilizer to the sub-frame without forcing the clamping brackets into position.
4. Torque tighten the bolts, setscrews, and link nuts to the figures quoted in Chapter P.

© Rolls-Royce Motors Limited 1984
March 1984
SD 4206

Section H4

Front hubs

Front hub - To remove

1. Apply the parking brake and chock the rear wheels.
2. Depressurize the hydraulic systems as described in Chapter G.
3. Remove the wheel trim from the respective wheel and slacken the wheel nuts.
4. Carefully position a jack below the triangle lever and raise the wheel from the floor. Position a sill block beneath the front end of the body sill to support the car.
5. Remove the road wheel.
6. Disconnect the brake caliper pipes at the flexible hose mounting plate connection. Fit blanks to the pipe ends.
7. Remove the brake caliper mounting bolts and withdraw the calipers off the brake disc.
8. Carefully remove the hub dust cap.
9. Break the sealing band and remove the split pin, castellated nut, and keyed washer from the stub axle.

Note

The right-hand stub axle nut has a right-hand thread and the left-hand stub axle nut a left-hand thread.

10. Withdraw the hub assembly from the stub axle.
11. Retain the chamfered distance piece.
12. Inspect the brake disc for wear and scoring.

Front hub - To dismantle

1. Remove the inner race from the outer bearing.
2. Using a screwdriver, prise the seals from the rear of the hub. Remove the seal protector and inner bearing race.
3. If new bearings are to be fitted, drive out the bearing outer races from the hub using a soft metal drift.
4. Thoroughly clean the hub and any serviceable components.
5. If it is necessary to remove the brake disc from the hub, reference should be made to Chapter G.

Front hub - To assemble (see Fig. H17)

1. Press the new bearing races squarely into the hub with the smaller end of the taper leading. Ensure that the bearing races are fully seated on the rear shoulders of the hub.
2. Lubricate, the new roller bearings and inner races with approved grease. Fit the rear bearing into the hub.
3. Fit the seal protector with the protective flange towards the bearing.
4. Carefully press the two seals into position. The seals should be fitted back to back with the spring side of the outer seal facing outwards. A small amount of approved grease should be packed between the seals.
5. Pack 42,5 g. (1.5 oz.) of approved grease onto the inner walls of the hub.
6. Fit the roller bearing and inner race previously greased, into the outer bearing race.

Note

Always ensure that the bearings are retained with their respective outer races as they are supplied in matched sets.

Front hub - To fit

1. Fit the internally tapered distance piece onto the stub axle with the taper towards the yoke (see Fig. H17).
2. Taking care not to damage the hub seals, position the hub on the stub axle.
3. Fit the key washer and castellated nut. Gradually tighten the nut until the bearing end-float is removed. Using a dial test indicator adjacent to the brake disc, check the run out of the disc at the maximum radius; this must not exceed 0,102 mm. (0.004 in.) total indicator reading.

Note

The reading obtained is a measure of the tolerances of all the components and if the run out figure exceeds the limit the hub should be dismantled and the cause investigated.

4. Slacken the castellated nut sufficiently to give an end-float reading of between 0,051 mm. and 0,102 mm. (0.002 in. and 0.004 in.) on a dial test indicator. Rotation of the hub during this operation is essential to ensure that the taper rollers seat correctly and a true reading is obtained.
5. When the end-float is correct, unscrew the castellated nut the minimum amount to allow the insertion of the split pin.

Again measure the end-float. Subtract the original end-float reading from this new reading and add the remaining amount to the thickness of the key washer being used. The addition of these two figures gives the correct thickness of key washer to be fitted on the stub axle.

Key washers are provided in thicknesses of 3,51 mm. and 3,56 mm. (0.138 in. and 0.140 in.).

Incorrect setting of the bearings will result in premature bearing wear.

6. With the correct thickness of key washer fitted insert a split pin which has been twisted to give a 90° turn to the head. Pass the sealing band through the split pin head, round the nut, and over the split pin legs.

Carefully tap the split pin fully into position then crimp the sealing band ends to secure it around the nut. Bend back the split pin legs around the nut.

7. Smear approximately 14 g. (0.5 oz.) of approved

Printed in England
© Rolls-Royce Motors Limited 1984
March 1984
TSD 4200

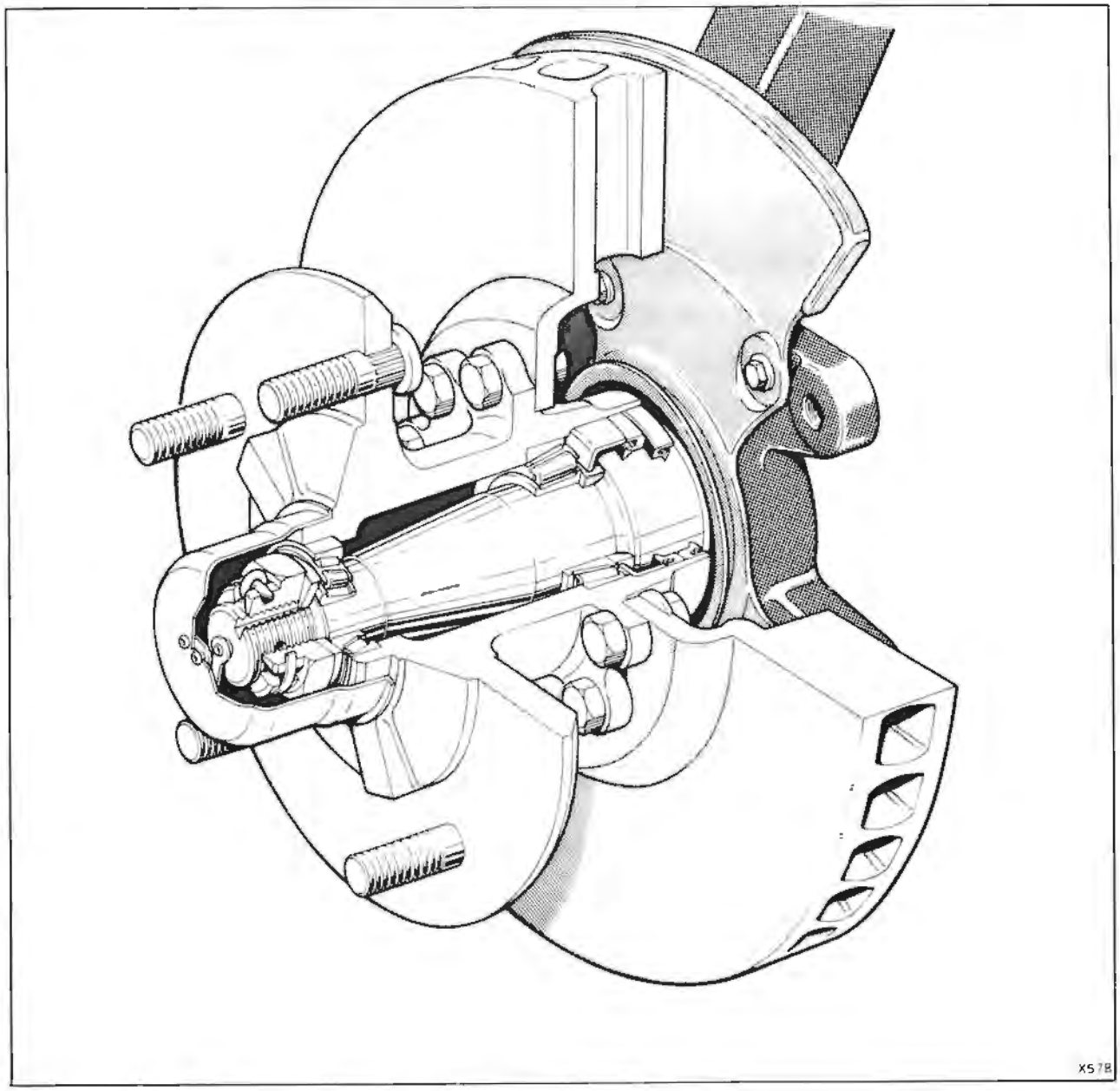

Fig. H17 Front hub assembly

grease into the base of the dust cap. Ensure the earthing strip in the cap is in the correct position to make contact with the end of the stub axle when the cap is fitted. Fit the cap by tapping it onto the hub with a nylon mallet.

8. Fit the brake calipers, road wheel, etc., by reversing the removal procedure.

9. Bleed the braking system as described in Chapter G.

Note

New brake discs are treated with a protective film. When a new disc is fitted, the brakes should be gently applied until the protective film has been removed from the working surface of the disc.

If only one front brake disc has been renewed, the car will gently pull to the side opposite the new disc until the protective film has been removed.

Section H5

Front suspension settings

Printed in England

© Rolls-Royce Motors Limited 1984

Introduction

Following operations in which the suspension has been partially or fully dismantled, the standing height of the car should be checked. This height is the vertical distance measured between the machined locating pads on the underside of the front sub-frame and the centre line of the triangle lever ball pin carrier securing bolt (see Fig. H18).

To allow the suspension to settle after assembly, drive the car back and forth several times before carrying out the standing height checks.

Standing height - To check

1. Ensure that the spare wheel, jack, tools, and accessories are fitted in their relevant positions.

2. Check the tyre pressures and correct if necessary.

3. Drive the car onto a suitable level ramp and chock the rear wheels.

4. Move the gear range selector lever to the P Park position. Remove the gear change isolator from the fuseboard.

Release the parking brake.

5. On cars other than Corniche and Camargue from serial number 50001 ensure the fuel tank contains 45 litres (10 Imp. gal., 12 U.S. gal.) of fuel.

Ballast the car with 136 kg. (300 lb.) equally divided between the two front seats.

On Corniche and Camargue cars from serial number 50001, the height must be checked with a full tank of fuel.

If however, the tank is partially empty, weight equivalent to the amount of missing fuel should be positioned adjacent to the fuel tank.

For each 4,5 litres (1 Imp. gal., 1.2 U.S. gal.) of missing fuel add 3,4 kg. (7.5 lb.) of weight.

Do not ballast the front seats.

6. Start and run the engine. Allow the hydraulic systems to fully pressurize.

7. Disconnect both height control valve links at the ball joints on the trailing arms.

8. Simultaneously raise both control valve links approximately 40 mm. (1.5 in.) and allow the car to level.

Note

There should be a delay before the car starts to level after raising the control valve links. This delay can vary as between cars and variation in engine speed. Always allow approximately two minutes for the levelling process to be completed.

9. Slowly pull down both control links approximately 25 mm. (1.0 in.) to exhaust the hydraulic pressure from the rear suspension. Allow three minutes for the car to stabilize.

10. Measure the standing height from the level surface on which the car stands, to the face of the front sub-frame locating pads. These pads are situated on the underside of the sub-frame adjacent to the front mounts (see Fig. H18 dimension A).

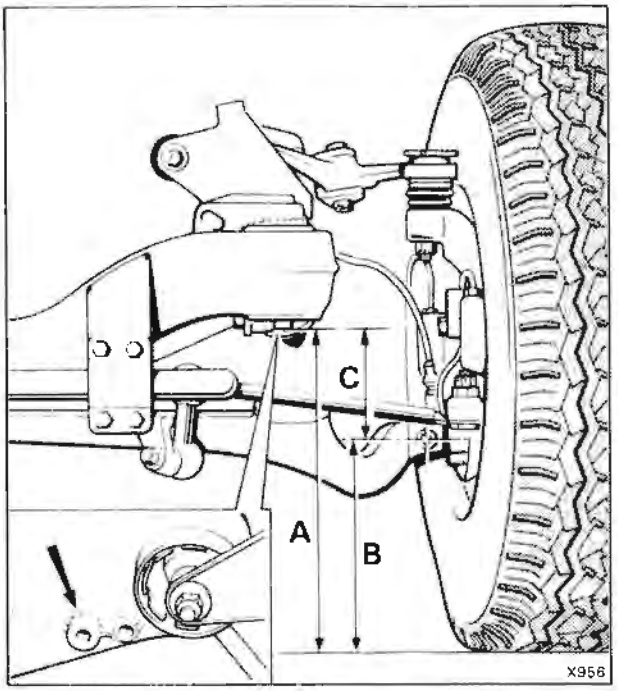

Fig. H18 Front height setting

A Floor to sub-frame location pad
B Floor to centre line of triangle lever bolt
C Height setting measurement A minus B
Inset Sub-frame location pad

11. Measure from the level surface to the centre of the bolt fitted through the lower ball pin carrier (see Fig. H18 dimension B).

12. Subtract dimension B from dimension A. The difference between the two dimensions should be as follows.

Cars other than Corniche and Camargue from serial number 50001; 86,4 mm. to 92,7 mm. (3.40 in. to 3.65 in.).

Corniche and Camargue cars from serial number 50001; 104 mm. to 110 mm. (4.10 in. to 4.35 in.).

If the resultant dimension is outside this tolerance adjust the car standing height as described below.

Standing height - To adjust

The car standing height is increased or decreased by altering the thickness of the collets fitted between the spring support collar and spring support plate. Refer to

April 1984

TSD 4200

Section H2 for collet thickness information.

1. Fit the support plate halves of the road spring retention tool (RH 8809), around the lower section of the damper and secure them together.

Insert the four long studs of the tool through the upper spring plate and screw them securely into the tool support plate. Fit the special nuts, thrust races, and washers to the top of each stud.

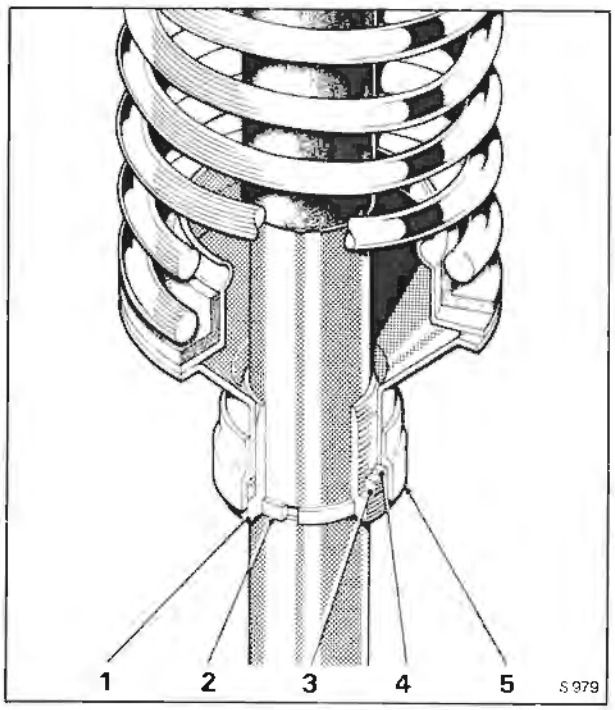

Fig. H19 Front height adjustment
1 Spring support collar
2 Support locating collar
3 Adjustment collets (thick)
4 Adjustment collets (thin)
5 Spring support

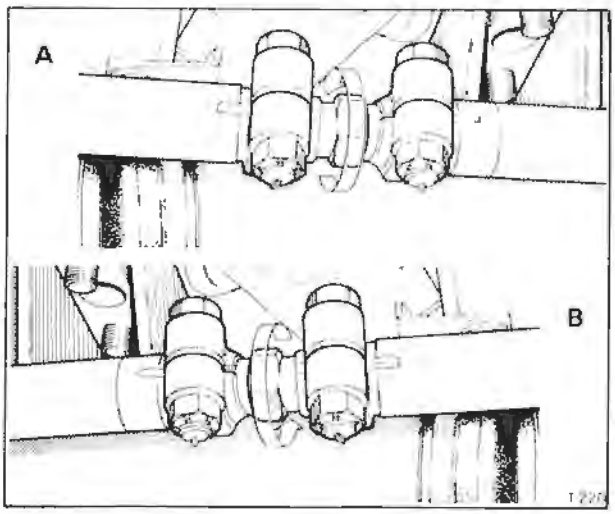

Fig. H20 Track rod toe-in adjustment
A Left-hand toe-in
B Right-hand toe-in

Warning
Always examine the spring retention tool components for signs of thread wear or damage prior to its use. If you have doubts concerning any parts of the tool and their ability to withstand spring load you should renew those parts.

It is recommended that the use of the tool is restricted to a maximum of 200 applications.

Always take extreme care when handling a road spring in a compressed condition.

2. Evenly tighten the four spring retention tool nuts to retain the spring in its compressed condition.

3. Place a jack under the centre triangle lever pivot and slowly raise the car.

This operation will allow the spring support collar to be drawn from the spring support plate, exposing the adjustment collets.

When the collets are exposed support the car body on sill blocks then carefully remove the collets.

4. Select the thickness of collets required to obtain the correct car standing height.

Do not fit collets totalling more than 25,4 mm. (1.0 in.) in thickness.

A packing washer 6,35 mm. (0.250 in.) thick gives a change in car height of approximately 9.50 mm. (0.375 in.).

5. Smear the collets with grease to hold them in position on the damper. **A**lways ensure that the thinnest collets are fitted to the top of the selection (see Fig. H19).

6. Remove the sill blocks and carefully lower the car ensuring that the collets enter the spring support plate correctly.

7. Remove the jack and spring retention tool. Lower the ramp to the ground.

8. Roll the car back and forth until the wheels attain a stable camber, then check the standing height again as described previously.

Steering and suspension geometry

Front wheel toe-in	0° 12' ± 5'
Camber angle	0° 30' negative ± 15'
Caster angle	3° 0' ± 30'

Maximum caster variation from side to side 0° 30'

Front wheel toe-in - To adjust

1. With the car standing height correctly adjusted, position the car on a level surface. Set the steering in the straight ahead position.

2. Move the car forward a half revolution of the road wheels. Moving the car backward will give a false reading.

3. Fit optical equipment onto the front wheels following the manufacturer's instructions and take a reading.

4. Remove the equipment and move the car forward a further half a revolution of the road wheels. Take a second reading.

An average of the two readings will give the toe-in figure.

5. If adjustment is necessary, slacken the pinch bolts securing the track rod adjusters (see Fig. H20). Rotate

the adjusters to bring the wheels into the straight ahead position (zero toe-in).

6. Rotate the adjusters by equal amounts to give an overall toe-in figure of between 0° 7' and 0°17'.

7. Tighten the pinch bolts then check the toe-in as described in Operations 1 to 4 inclusive.

8. When the toe-in is correct torque tighten the pinch bolts to the figure quoted in Chapter P and fit new split pins.

Caster and camber angles - To adjust

The caster and camber angles must be checked at the same time as adjustment of one affects the other.

1. Drive the car onto a ramp setting the front wheels on turntables. Place blocks beneath the rear wheels to maintain the car on a level plane. Chock the rear wheels.

2. Ensure the car standing height is correct.

3. Fit suitable checking equipment to the wheel and check the caster and camber angles in accordance with the equipment manufacturer's instructions.

4. Caster angle

To adjust the caster angle, move the compliance rod in or out of the compliance mount using the clamping nuts on the rod (see Fig. H15). Slacken the compliance rod jaw bolt sufficiently to allow the jaw to pivot on the compliance arm during adjustment.

5. Camber angle

To adjust the camber angle, release the eccentric bolt on which the compliance arm pivots. Turn the bolt until the correct camber angle is obtained.

Note

The arrow stamped on the bolt head (see Fig. H15) should always point below the centre line of the bolt.

6. Check the caster angle again to ensure that the adjustment of the camber angle has not altered the caster angle out of the required limits.

Torque tighten the bolts and nuts to the figures quoted in Chapter P before carrying out the final checks.

7. Carry out the same adjustment procedure on the other front wheel.

The maximum caster variation allowed between each side of the car is 0° 30'.

Steering lock stop adjustment

This information is applicable to cars prior to the following car serial numbers.

Silver Shadow II 39572 except 39376, 39451 and 39458

Silver Wraith II 38847 except 38627, 38642, 38654, 38758, 38762, 38768 and 38833.

Corniche 50333 except 50285, 50303 and 50311.

Camargue 50348 except 50298.

1. Position the front road wheels on turntables with the steering in the straight ahead position.

2. Move the gear change selector lever to the P Park position.

3. Remove the gear range selector thermal cut-out from the fuseboard.

4. Fit a centralizing plug into the steering rack (see Fig. N7). Record the angles shown on the turntables if they have moved from the zero position. **Remove the centralizing plug** from the steering rack.

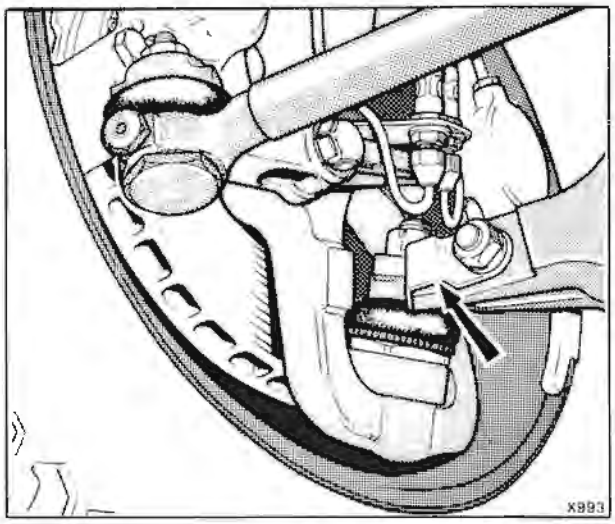

Fig. H21 Steering lock-stop packing

5. With the engine running, rotate the steering wheel in a clockwise direction until the right-hand road wheel has travelled through 40°. Switch off the ignition.

6. When the right-hand wheel is set at this angle, the left-hand road wheel should have turned between 34° and 38° on the turntable.

7. Ensure that the right-hand road wheel is limited in its travel by the lock stop on the left-hand triangle lever. If clearance exists between the yoke and triangle lever end a suitable lock stop packing should be fitted to the end of the triangle lever (see Fig. H21).

Important

Under no circumstance should the maximum steering lock be governed by the limiting travel of the rack and pinion steering unit.

8. Carry out the same procedure with the steering on the opposite lock.

Note

If a new steering rack is required, a rack incorporating lock stops should be fitted. This type of rack has been fitted to all cars from and including the car serial numbers given above.

With this type of rack, lock stop adjustment is not required and any existing lock stops should be removed.

Printed in England

© Rolls-Royce Motors Limited 1984

Section H6

Bump and rebound stops

Front suspension bump and rebound stops - To renew

1. Drive the car onto a ramp and apply the parking brake.

2. Chock the rear wheels.

3. Using 'C' spanner (RH 7850) remove the bump stop. Collect the special washer (if fitted) from beneath the bump stop.

4. If insufficient clearance is available to allow the bump stop to be removed, jack up the front of the car until clearance is obtained.

5. To remove the rebound stop unscrew it from the underside of the compliance arm using a 'C' spanner.

6. Fit the bump and rebound stops by reversing the removal procedure.

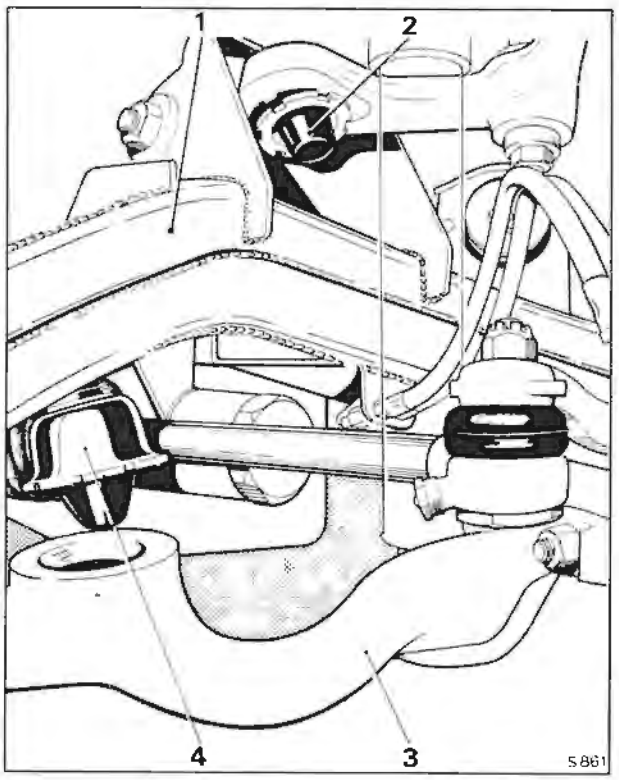

Fig. H22 Bump and rebound rubbers. Front suspension
1 Sub-frame
2 Rebound rubber
3 Front triangle lever
4 Bump rubber

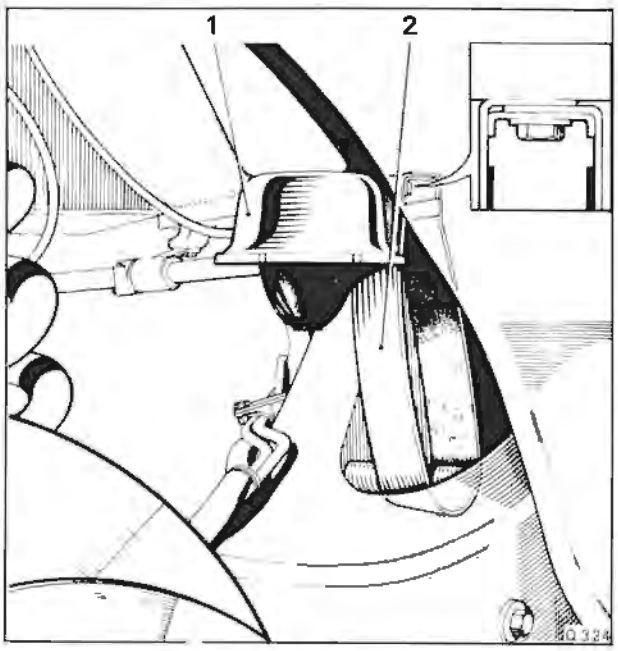

Fig. H23 Bump rubber and rebound strap. Rear suspension
1 Bump rubber
2 Rebound strap
Inset - Fitting of rebound strap

Rear suspension bump stop and rebound strap - To remove

1. Drive the car onto a ramp and apply the parking brake.

2. Chock the front wheels.

3. Unscrew the bump stop using 'C' spanner (RH7850).

4. To remove the rebound strap, unscrew the setscrew securing it to the car body. Collect the washer and clamping plate.

5. Pull the sides of the strap apart to remove it from the trailing arm cross tube.

6. Fit the bump stop and rebound strap by reversing the removal procedure.

7. When tightening the rebound strap setscrew ensure that the strap is centralized around the trailing arm cross tube.

8. Lubricate the rebound strap rubber using a suitable rubber lubricant.

Note

On Corniche and Camargue cars from serial number 50001 the rebound stop is incorporated in the rear suspension strut and servicing is not necessary.

The bump stops on these cars are secured by two setscrews.

Printed in England
© Rolls-Royce Motors Limited 1984
March 1984
TSD 4200

Section H7

Rear crossmember

Crossmember end mounts - To remove

Using the following method the rear crossmember end mounts can be removed with the crossmember in position. Only one mount should be removed at any time.

1. Drive the car onto a ramp and chock the rear wheels.

2. Apply the parking brake.

3. Depressurize the hydraulic system as described in Chapter G.

4. Position a jack beneath the rear crossmember as near as possible to the mount being removed. Adjust the jack to support the crossmember.

5. Position sufficient ballast (sandbags) in the luggage compartment of the car, to overcome the action of the road springs, when the mount is removed.

The ballast should maintain the correct distances between the mount, the crossmember mounting point, and the faces of the upper and lower sill brackets.

6. Wedge a piece of wood between the rear crossmember and the body heelboard to prevent the crossmember from tilting forward.

7. Remove the centre bolt from the mount and the lower steady bracket from the body sill.

8. Remove the setscrews securing the mount to the crossmember and withdraw the mount.

Crossmember end mounts - To fit

Fit the mounts by reversing the removal procedure noting the following.

1. Invert the mount and support the central flange of the mount on blocks. The blocks should have a minimum height of 7,0 cm. (2.750 in.).

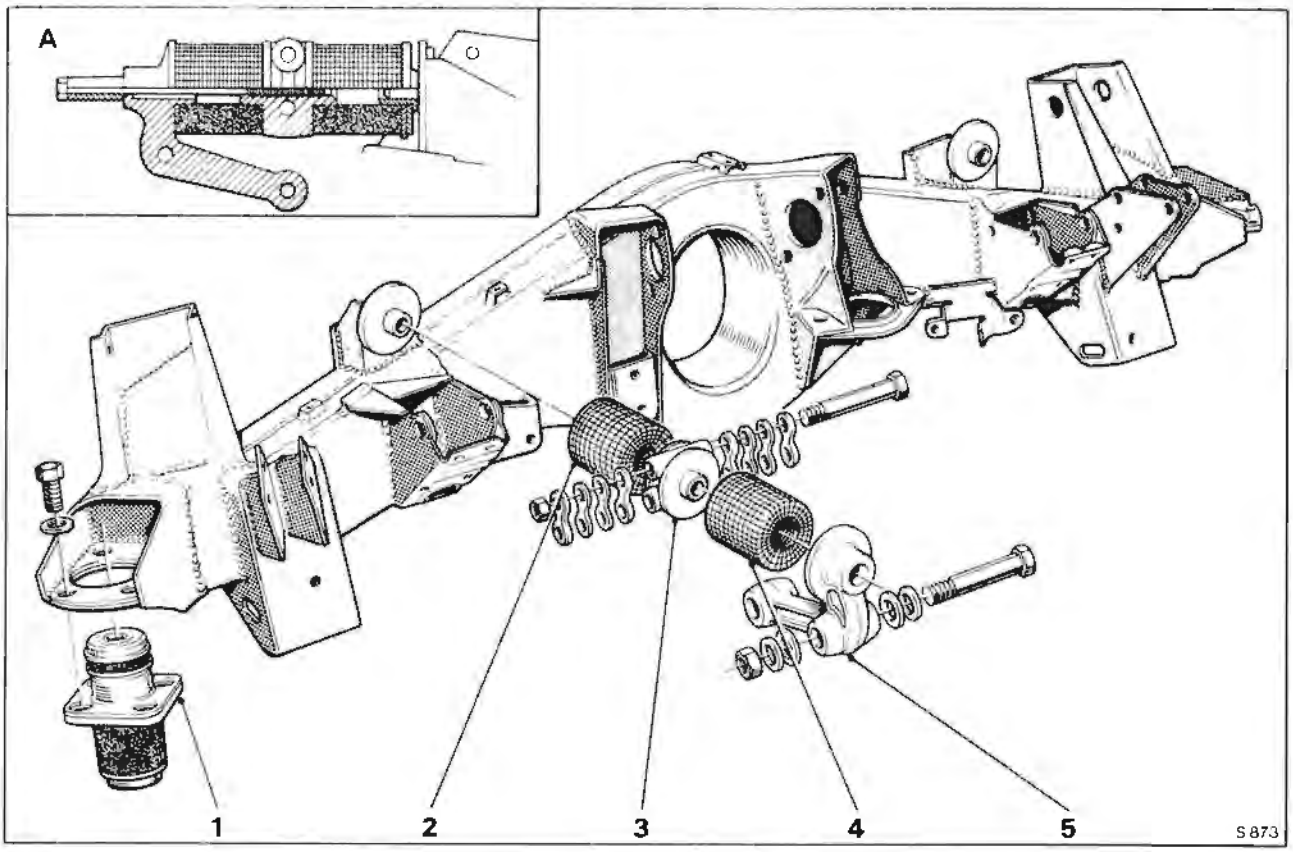

Fig. H24 Rear crossmember

1 Crossmember end mount
2 Horizontal compliance mount cushion (short)
3 Centre abutment block
4 Horizontal compliance mount cushion (long)
5 Forged abutment bracket
A Horizontal compliance mount assembly.

Printed in England
© Rolls-Royce Motors Limited 1984

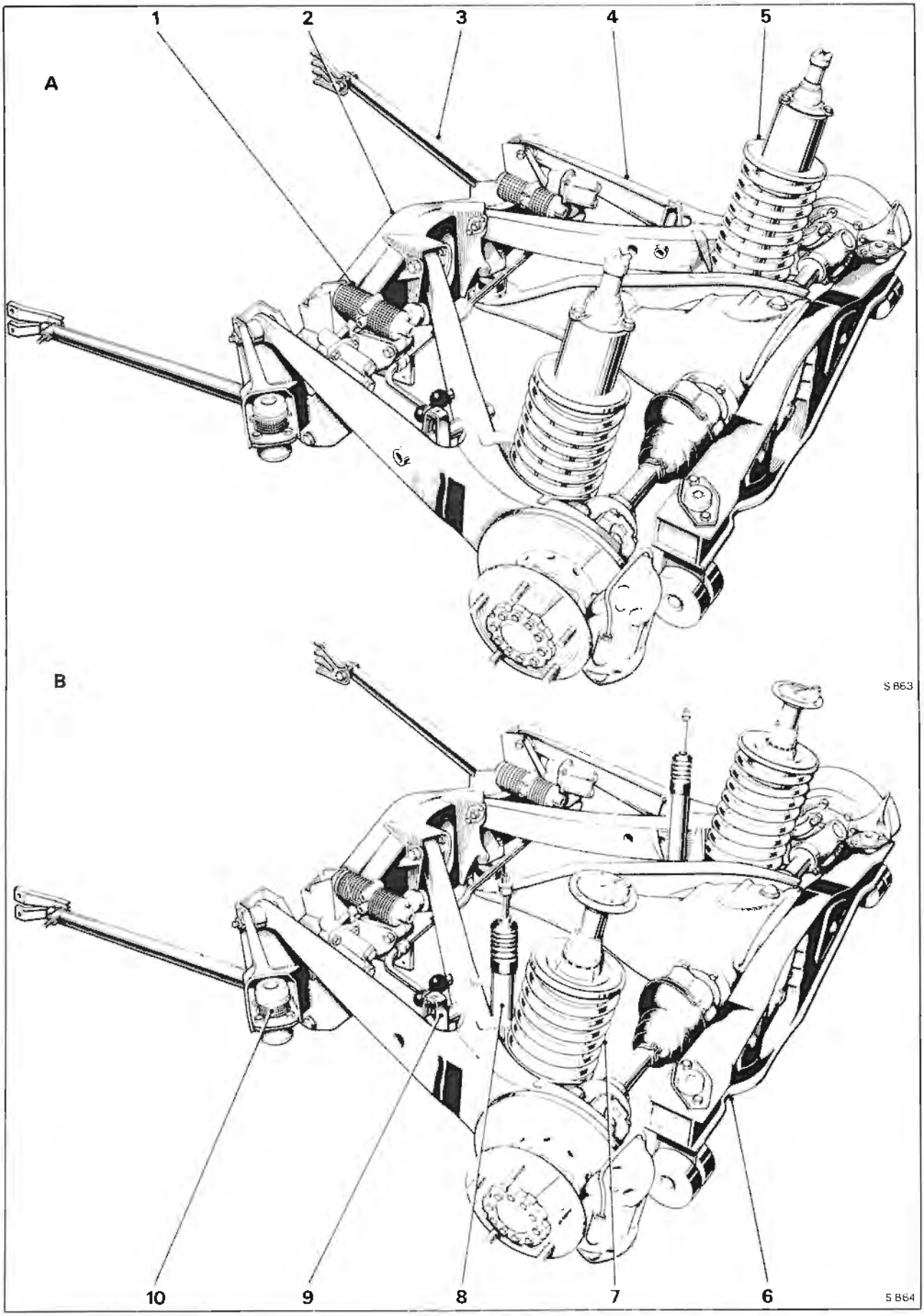
1
2
3
4
5
A
S 863
B
10
9
8
7
6
S 864

2. Using a small hand press located on the bottom cup of the mount, press open the top cup of the mount.

Insert split packing ring (RH7848) between the upper cup rim and the single limiting cushion (see Fig. H26)

Care should be taken not to bend the central flange.

3. Centralize the mount using special fixture (RH7847) so that the radial run out of the cylindrical portion of the mount does not exceed 0,64 mm. (0.025 in.).

4. Fit the mount to the crossmember and torque tighten the setscrews to the figure quoted in Chapter P.

Ensure that the crossmember position is not disturbed.

5. Fit the lower steady bracket and the mount centre bolt. Torque tighten the setscrews and centre bolt to the figures quoted in Chapter P.

6. Remove the split packing from the mount and the wooden wedge from between the crossmember and heelboard.

7. Repeat the procedure for the other mount if necessary.

Crossmember and trailing arm assembly - To remove

1. Drive the car onto a ramp and chock the front wheels.

2. Depressurize the hydraulic system as described in Chapter G.

3. Remove the rear wheel trims and slacken the wheel nuts.

4. Remove the road springs as described in Section H10.

5. With the body supported on sill blocks, position a jack under each trailing arm. Jack up the arms and remove the road wheels.

6. Remove the rear sections of the exhaust system from beneath the crossmember and trailing arms.

7. Disconnect the flexible hydraulic pipes from the crossmember and trailing arms. Fit blanks to the pipe ends.

8. Disconnect the brake cables from the rear calipers and the clips on the trailing arms.

9. Remove the propeller shaft as described in Chapter F.

Fig. H25 Rear sub-frame and suspension assembly

- **A** All cars except Corniche Convertible
- **B** Corniche Convertible
- 1 Horizontal compliance cushions
- 2 Crossmember
- 3 Right-hand tubular link
- 4 Right-hand trailing arm
- 5 Spring, damper and height control ram
- 6 Final drive crossmember assembly
- 7 Spring and special height control ram
- 8 Damper. Independent fixing position
- 9 Rebound strap
- 10 Crossmember to body sill mount

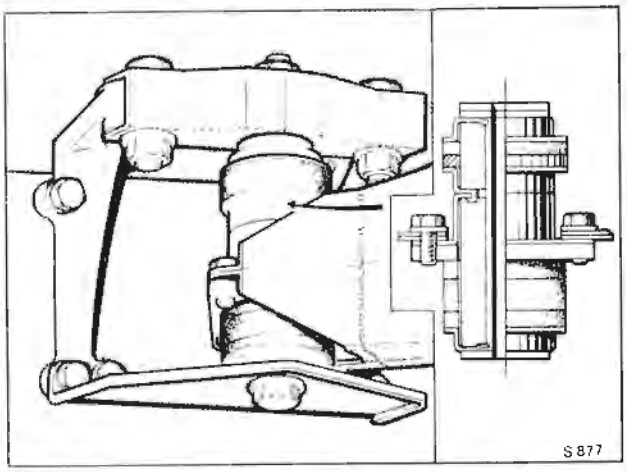

Fig. H26 Crossmember end mount
Inset Split rings in position

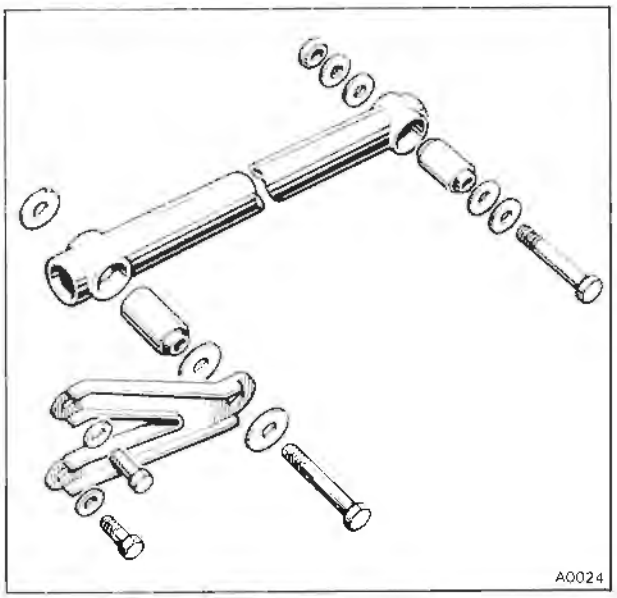

Fig. H27 Crossmember to body tubular link

Note
To reduce the weight and enable the crossmember and trailing arm assembly to be handled more easily, the rear hubs can be removed as described in Chapter J.

If the hubs are not removed, disconnect the drive-shafts from the hubs. Bind the needle roller caps with masking tape to retain them on the universal joint.

Secure the drive shafts to the final drive crossmember with cord to prevent the withdrawal of the trunnion joint from its housing.

10. Disconnect the height control valve links.

11. Screw a slave 5/16 in. U.N.F. setscrew through the centre of the two horizontal compliance cushion mounts (see Fig. H24) to retain them in their compressed condition.

12. Remove the bolts securing the centre abutment block of the mounts to the body. Note the thickness

Printed in England
© Rolls-Royce Motors Limited 1984
April 1984
TSD 4200

and position of the packing plates to assist assembly.
13. Support the final drive casing with a jack, then remove the torque arm. Do not allow the final drive to be unsupported when the torque arm has been removed.
14. Support the crossmember with jacks.
15. Remove the tubular links.
16. Remove the lower bracket and centre mounting bolt from the crossmember end mounts.
17. Ensure that all the relevant components have been disconnected then carefully lower the crossmember and trailing arm assembly from the car.

Crossmember and trailing arm assembly - To fit
Fit the assembly by reversing the removal procedure noting the following.
1. Always ensure that all mounts, pivot bushes, hoses, pipes, etc., are in a serviceable condition.
2. If the trailing arms have been removed from the rear crossmember the camber and toe-in should be checked as described in Section H8.
3. Fit the horizontal compliance cushions to the crossmember as described under Horizontal compliance mount cushions - To renew.
4. Fit the crossmember end mounts as described in Operations 1 to 4 inclusive of Crossmember end mounts - To fit.
5. Ensure that the upper beam distance tubes on the body mounting points are free to move. This will enable the crossmember to be centralized without side load being applied to the mounts.
6. With the crossmember and trailing arms supported on jacks, raise the assembly into position. Fit the lower steady brackets and centre bolts to the end mounts. Only finger tighten the centre bolts at this stage. Ensure that the mounts are not disturbed radially and that the crossmember remains vertical.
7. With the crossmember within 3,18 mm. (0.125 in.) of its final position, align it to the front sub-frame. Measure the longitudinal and diagonal distances between the machined fixture locating pads (see Fig. H29). Similar measurements should be equal to within 1,60 mm. (0.062 in.).
8. Raise the crossmember to abut the upper crossbeams.
9. Position and secure the lower steady brackets to the car sills. Torque tighten the setscrews and the centre bolts of the mounts to the figures quoted in Chapter P.
10. Fit the tubular links to the crossmember and body sills. Ensure that the crossmember is in the vertical position.
11. Secure the horizontal compliance cushion mounts to the body. Fit the packing plates to each side of the abutment block to rectify any body bracket variation and retain cushion alignment.
12. Remove the slave bolts from the centre of each mount.
13. Remove the split packing from the crossmember end mounts.
14. Bleed the hydraulic system as described in Chapter G Part 1.
15. Check the car standing and levelled height as described in Section H8 and Chapter G.

Horizontal compliance mount cushions - To renew with rear crossmember fitted.
1. Fit a 5/16 in. U.N.F. setscrew through the centre of

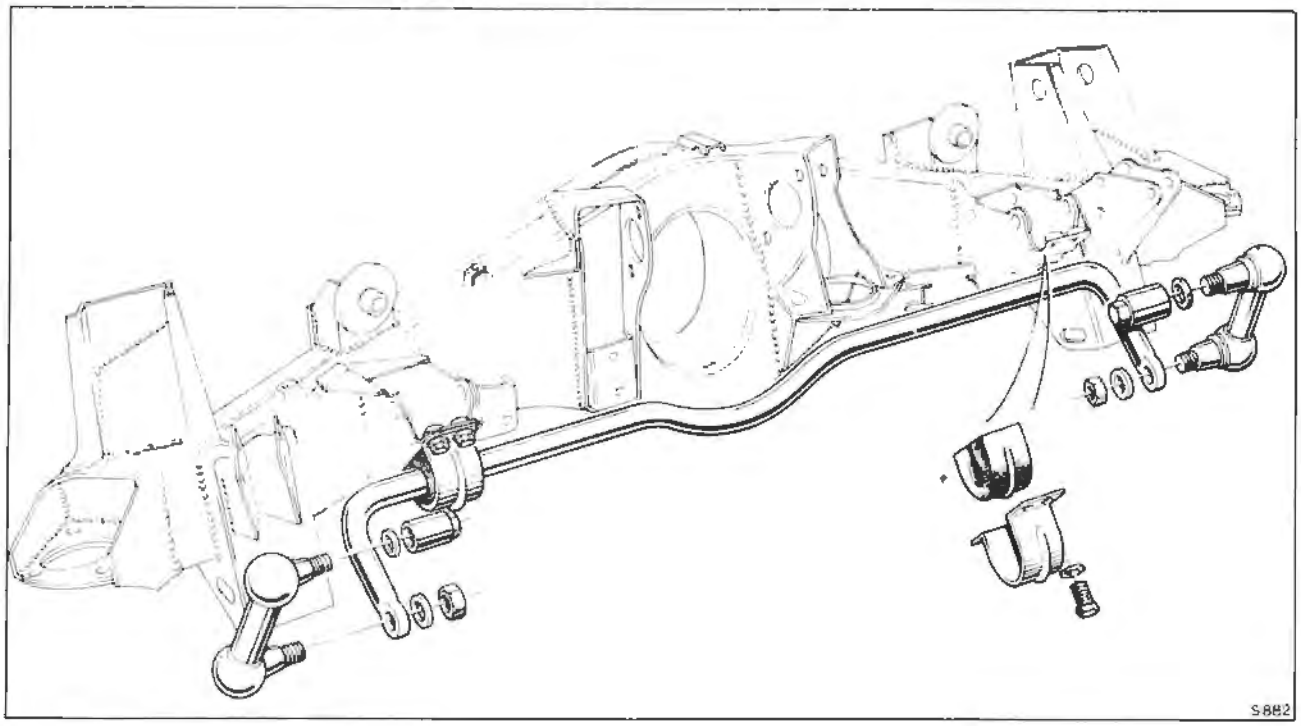

Fig. H28 Rear stabilizer assembly

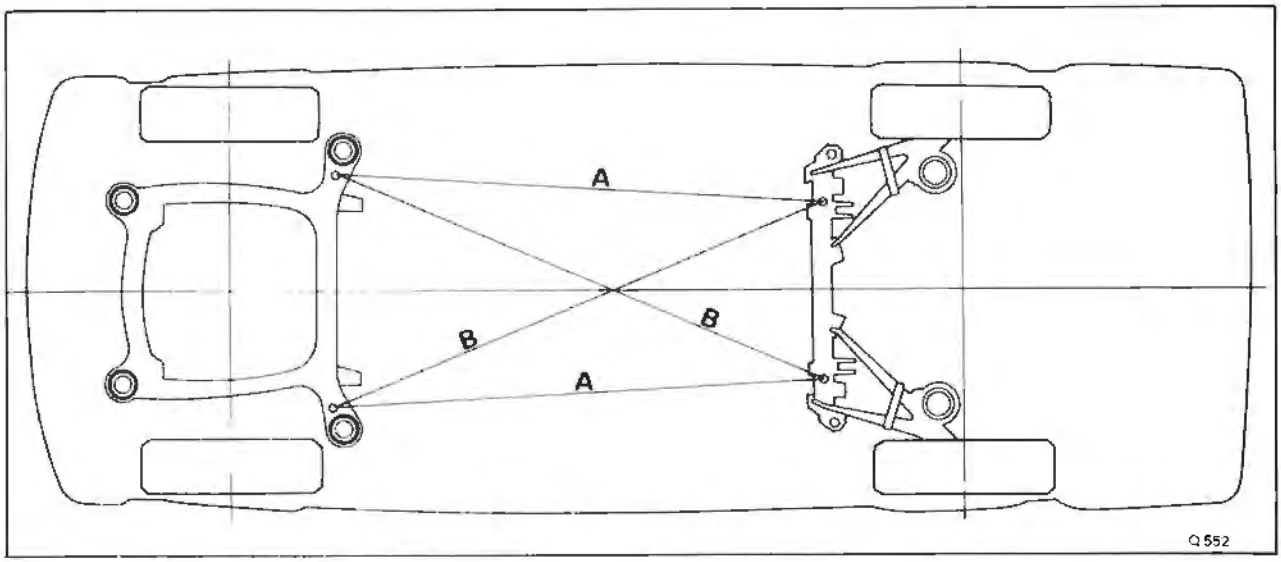

Fig. H29 Sub-frame alignment
Measurements to be equal within 1,6 mm.(0.062 in.)

each horizontal compliance assembly, screwing it into the centre abutment bracket. Tighten the setscrew sufficiently to compress the rear cushion of the mount to approximately 5,08 mm. (2.0 in.).

In order to fit the setscrew it may be necessary to raise the car body to relieve spring load from the crossmember.

2. If the cushions have collapsed, it will be necessary to move the top of the crossmember rearward until the 5,08 mm. (2.0 in.) measurement is obtained.

Raise the body to relieve the spring load then insert wooden wedges between the crossmember trailing arm outer mounting brackets and the body heelboard.

3. Remove the bolts securing the forged abutment bracket and the centre abutment block from one of the mounts. Note the position, quantity, and thickness of the packing plates fitted on each side of the centre abutment bracket.

4. Remove the slave setscrew from the centre of the mount and discard the cushions.

5. Fit a new long cushion between the centre and forged abutment brackets. Fit the slave setscrew through the centre of the components. Compress the cushion by tightening the setscrew until the cushion measures 5,08 mm. (2.0 in.)

6. Fit a new short cushion onto the crossmember mounting bracket, then fit the bracket and cushion assembly onto the crossmember and body. Fit the packing plates and washers into the positions from which they were removed. Torque tighten the bolts to the figures quoted in Chapter P.

Do not remove the slave setscrew at this stage.

7. Carry out the same procedure to renew the other mount.

8. Remove the slave setscrew from the centre of each mount and any wooden wedges that have been used to position the crossmember.

Rear stabilizer - To remove

1. Unscrew but do not fully remove the reach nuts securing the stabilizer links to the trailing arms.

2. Using a hammer and soft metal drift placed on the reach nut, separate the stabilizer link tapers from the trailing arms.

3. Remove the brackets retaining the stabilizer mounting bushes to the crossmember.

4. Remove the stabilizer and rubber mounting bushes.

5. To remove the stabilizer links from the stabilizer bar repeat Operations 1 and 2.

Rear stabilizer - To fit

Fit the stabilizer by reversing the removal procedure noting the following.

1. Examine the stabilizer mounting bushes and links for serviceability. Renew if necessary.

2. Loosely assemble the links into the trailing arms.

3. Fit the stabilizer onto the links then secure the stabilizer bar onto the crossmember.

4. Torque tighten the setscrews and link nuts to the figures quoted in Chapter P.

Printed in England
© Rolls-Royce Motors Limited 1984
April 1984
TSD 4200

Section H8

Rear suspension settings

Introduction

Following operations in which the suspension has been partially or fully dismantled, the standing and levelled height of the car should be checked.

For details of the procedure required for setting the levelled height refer to Chapter G.

To allow the suspension to settle after assembly, drive the car back and forth before carrying out the standing height checks.

Standing height - To check

1. Ensure that the spare wheel, jack, tools, and accessories are fitted in their relevant positions.

2. Check the tyre pressures and correct if necessary.

3. Drive the car onto a suitable level ramp and chock the wheels.

4. Move the gear range selector lever to the P Park position. Remove the gear change isolator from the fuseboard.

Release the parking brake.

5. Check the standing height of the front suspension as described in Section H5.

6. Ensure the fuel tank contains 45 litres (10 Imp. gal, 12 U.S. gal.) of fuel. Ballast the car with 136 kg. (300 lb.) equally divided between the two front seats.

7. Depressurize the hydraulic systems or disconnect the height control valve links to de-activate the system. If the links are disconnected pull the arms downwards to discharge the fluid from the height control rams.

8. Measure the standing height from the level surface on which the car stands to the centre of the rear bottom setscrew which secures the forged brackets of the rear crossmember mount (see Fig. H30 dimension A).

9. Measure from the level surface to the centre of the rear bottom bolt which secures the rear hub to the trailing arm (see Fig. H30 dimension B).

10. Subtract dimension A from dimension B. The

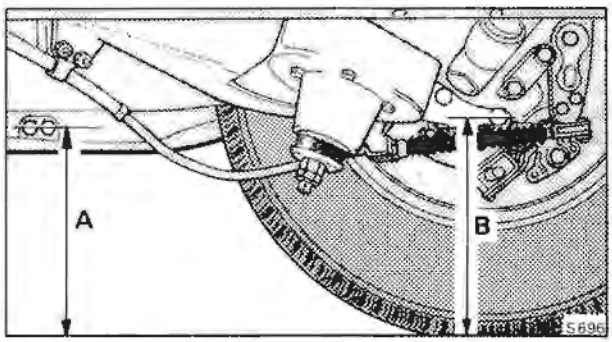

Fig. H30 Rear height setting

A Floor to centre of body bracket setscrew

B Floor to centre of parking brake linkage bracket setscrew

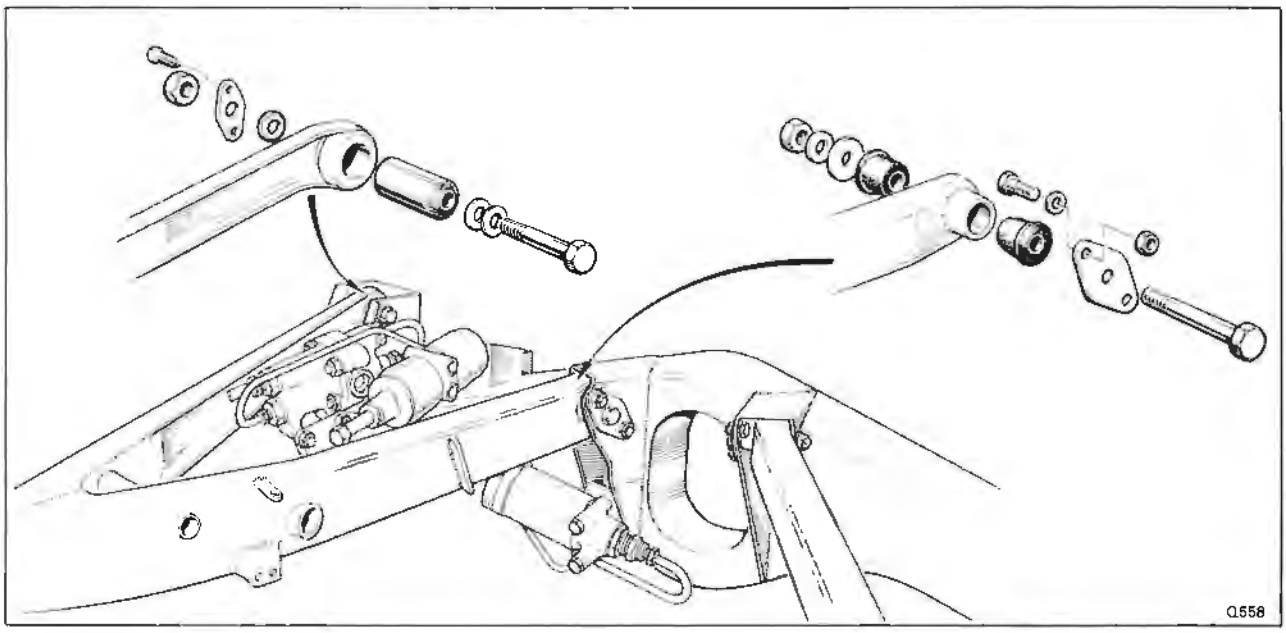

Fig. H31 Trailing arm to crossmember assembly

Printed in England

© Rolls-Royce Motors Limited 1984

difference between the two dimensions should be between 16 mm. and 22 mm. (0.520 in. and 0.870 in.). The maximum permissible difference in height between each side of the car being 4,76 mm. (0.187 in.).

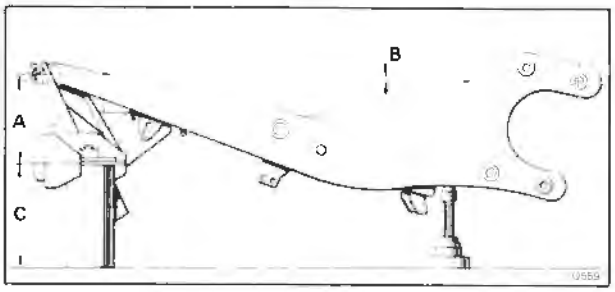

Fig. H32 Camber and toe-in setting (side elevation)
- **A** 13,49 cm. (5.312 in.)
- **B** 6,86 mm. (0.27 in.)
- **C** 25,40 cm. (10.00 in.)

On cars conforming to a North American specification with the exception of Camargue, a 12,50 mm. (0.50 in.) thick aluminium ring and a second flexible seat are fitted. On these cars the difference between dimension A and dimension B should be between 8,80 mm. and 10,60 mm. (0.150 and 0.400 in.).

11. If the standing height is incorrect, add or remove the required number of packing washers to or from the top spring seat. A minimum of one washer must always be fitted. The maximum allowed is ten.

Refer to Section H10 for spring loading details.

12. When the standing height is correct the levelled height should be set as described in Chapter G Part 1.

Note

No more than seven washers should be fitted to adjust car height when a new spring is being fitted. This will allow further adjustment to be made should the spring settle after prolonged use.

Up to ten washers can be fitted to a spring that has been in service. If necessary these can be supplemented by the addition of one 12,50 mm. (0.50 in.) aluminium ring and flexible seat fitted into the lower spring mount.

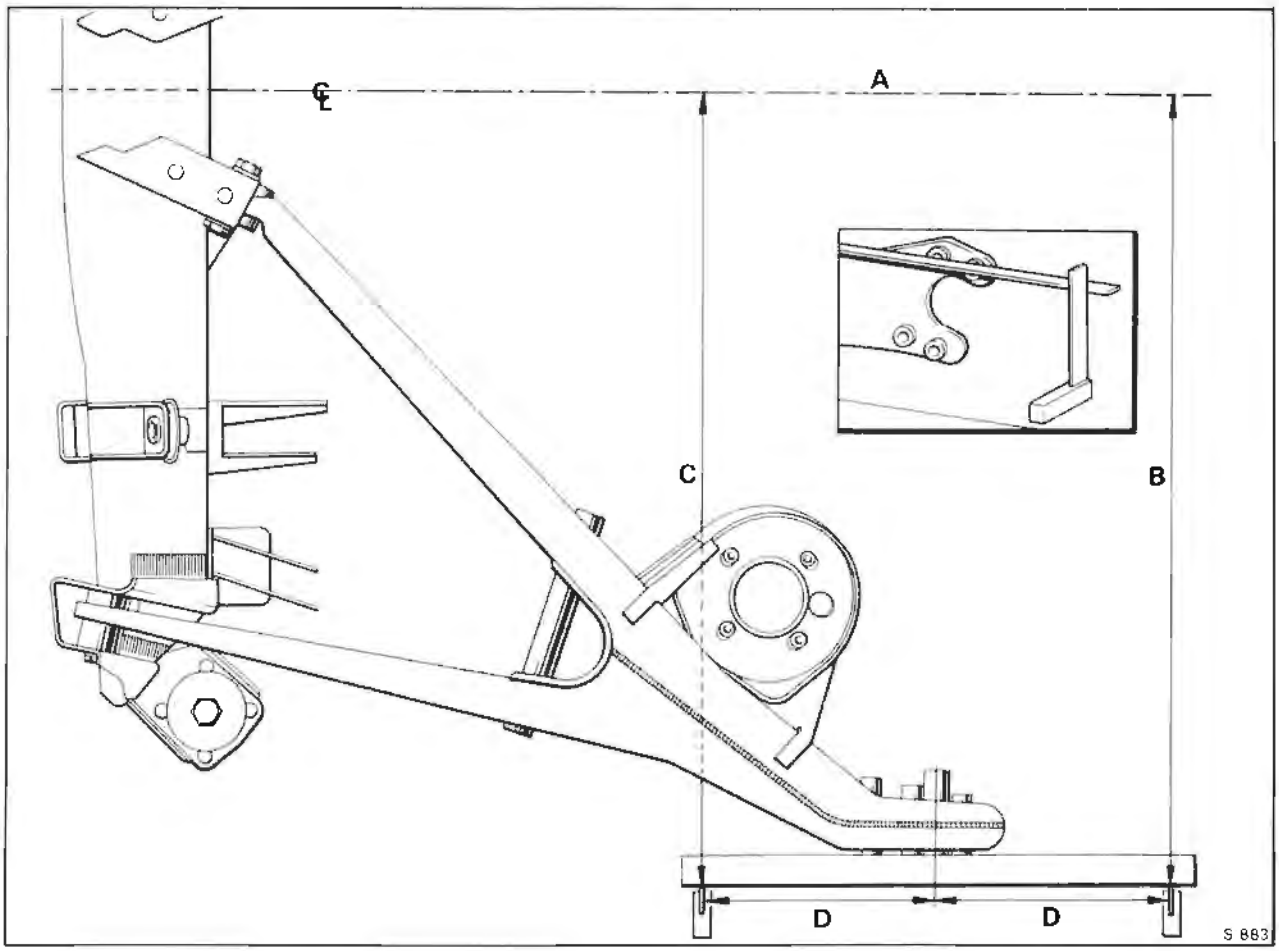

Fig H33 Camber and toe-in setting (Plan view)
- **A** Centre line marked on surface table
- **B** Measurement taken along the surface table from the centre line to each engineers square
- **C** As B
- **D** 21,60 cm. (8.50 in.) about road wheel centre line

Inset - Position of the straight edge

The use of the aluminium ring does not apply to cars which already have it fitted as standard i.e. Silver Shadow II, Silver Wraith II and Corniche conforming to a North American specification.

If the ring is used, it should be calculated as equivalent to six packing rings, giving a change in car height of approximately 19 mm. (0.750 in.).

Trailing arm camber - To set

1. Mount the crossmember on a surface table as shown in Figure H32.
2. Fit the trailing arms to the crossmember (see Fig. H31) and set them in the 'normal ride' position using small screw jacks situated beneath each arm.
3. Tighten the centre bolt of the inner bush and the bolts securing the plate on each trailing arm.
4. Tighten the centre bolt of the outer bush sufficiently to remove end play but still allow trailing arm movement.

Ensure that the location plate is suitably positioned.

5. Using suitable camber setting equipment or a precision square across the upper and lower faces of the hub location tubes, check the camber of the trailing arm. The setting must be between minus 0° 15' and plus 0° 15'. The trailing arm settings must be within 0° 15' of each other.
6. Tighten the outer bush centre bolt.
7. Check the toe-in of each trailing arm. Adjustment of the camber will also alter the toe-in, therefore it is necessary to adjust both settings until a satisfactory position is obtained.

Toe-in - To check

1. Mount the crossmember on a surface table as shown in Figure H33.
2. Mark a centre line between the centre of the rear crossmember and the final drive crossmember.
3. Place a straight edge across the hub mounting tubes to give the equivalent of the road wheel rim diameter.

With the aid of a set square positioned 208 mm. (8.20 in.) from the centre line of the hub mounting tubes (see Fig. H33), measure the distance from the base of the square to the centre line on the table.

4. Repeat the measurement from the other side of the hub centre line.
5. Compare the measurements taken from each side of the hub.

The toe-in reading for one wheel to the centre line on the surface table should be between 0,79 mm. and zero (0.031 in. and zero).

If the toe-in is incorrect adjust the outer trailing arm mounting point in the crossmember then tighten the centre bolt.

Adjustment to the toe-in will also alter the camber, therefore it is necessary to adjust both camber and toe-in until a satisfactory position is obtained.

6. Repeat the procedure for the other trailing arm until a satisfactory reading of camber and toe-in for both wheels is obtained.

The maximum permissable toe-in differential between each side of the car is 0,38 mm. (0.015 in.).

7. On completion, torque tighten the centre bolts to the figures quoted in Chapter P. Repeat the toe-in and camber checks.
8. Secure the outer location plates in position. It will be necessary to drill two 4 mm. (0.156 in.) diameter holes in each crossmember bracket to accept the self-tapping securing screws.

Printed in England

© Rolls-Royce Motors Limited 1984

Section H9

Rear shock dampers

Printed in England

© Rolls-Royce Motors Limited 1984

Introduction

The shock dampers are sealed units therefore no servicing is required. In the event of a damper becoming faulty, it should be discarded and a new damper fitted.

Each damper contains nitrogen gas under pressure and under no circumstances should it be subjected to undue force. Do not clamp the damper in a vice.

On all cars prior to car serial number 50 001, except Corniche Convertibles, the rear dampers are situated through the centre of the road springs. The upper end of each damper is secured to the connector tube of the height control rams. The lower end of each damper is attached to a plate secured to the trailing arm spring support.

On Corniche Convertible cars, prior to car serial number 50 001, the rear dampers are situated in front of the road spring.

The upper end of each damper is secured in a hole situated on each of the rear squab frame stiffeners. The lower end of each damper is secured to a bracket on the trailing arms (see Fig. H36).

For cars from serial number 50 001 reference should be made to Chapter G Section G14m.

Shock damper - To remove

All cars prior to car serial number 50 001 except Corniche Convertible

To gain access to the top mount of the damper the height control ram must be removed. The ram is secured to the top of the rear spring housing and is situated at the front of the luggage compartment.

1. Drive the car onto a ramp and chock the road wheels.

2. Depressurize the hydraulic system as described in Chapter G.

3. Attach bleed tubes to the height control ram bleed screws. Open the bleed screws and allow any remaining fluid to drain into a clean container.

4. Remove the trim from the front of the luggage compartment to expose the height control rams.

On cars conforming to a North American specification it will be necessary to remove the fuel tank to gain access to the height control rams. Refer to Chapter K for details.

5. Disconnect the hydraulic pipes from the top of the height control ram. Fit blanks to the pipe ends and ram ports.

6. Unscrew the three ram retaining setscrews equal amounts, to allow the road spring connector tube to lift under spring pressure. When the tube abuts the underside of the spring housing remove the setscrews completely.

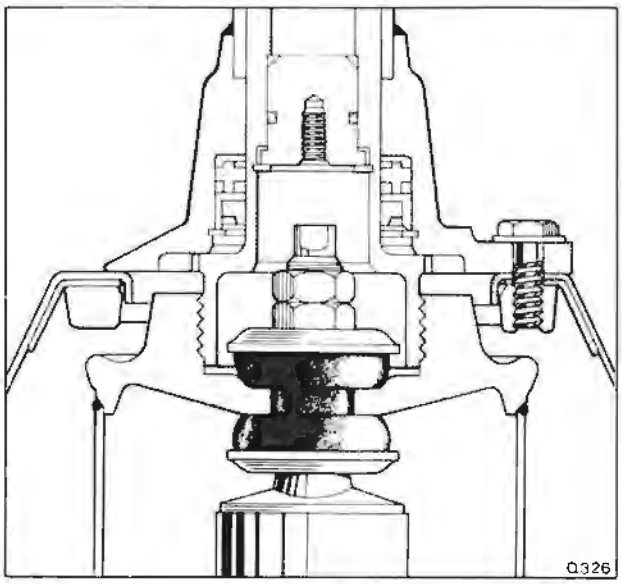

Fig. H34 Height control ram and damper mounting (all cars except Corniche Convertible)

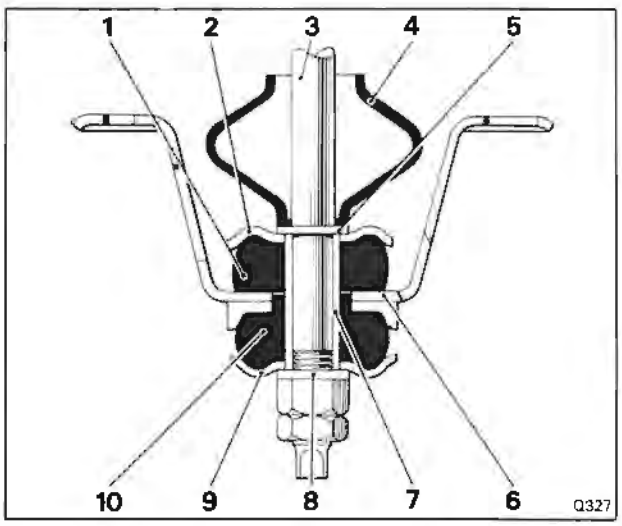

Fig. H35 Damper lower mount (all cars except Corniche Convertible)

1 Rubber bush
2 Upper seating washer
3 Damper spindle
4 Convoluted seal
5 Upper washer - Distance tube
6 Damper bracket assembly
7 Distance tube
8 Lower washer - Distance tube
9 Lower seating washer
10 Spigot rubber

7. Ease the ram housing upwards to gain access to the ram piston slots. Using hook wrench (RH8051) unscrew the ram piston from the connector tube. Carefully remove the ram from the car.
8. Remove the nuts, cup washers, and rubber mount from the top of the damper.

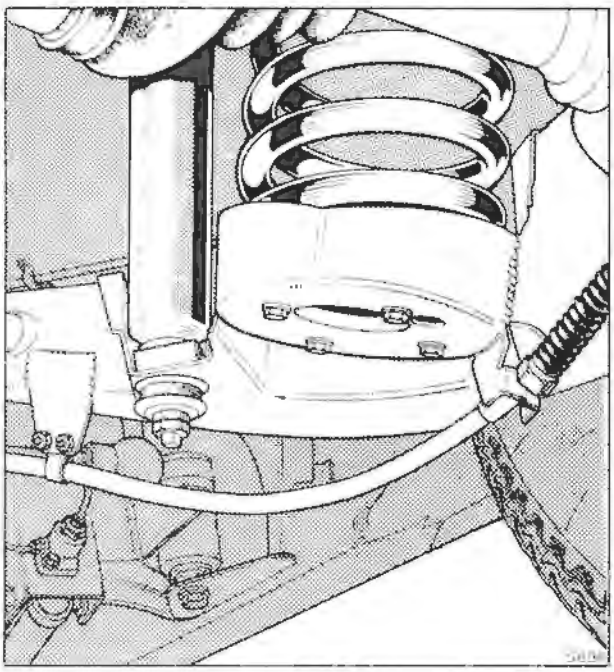

Fig. H36 Damper location (Corniche Convertible)

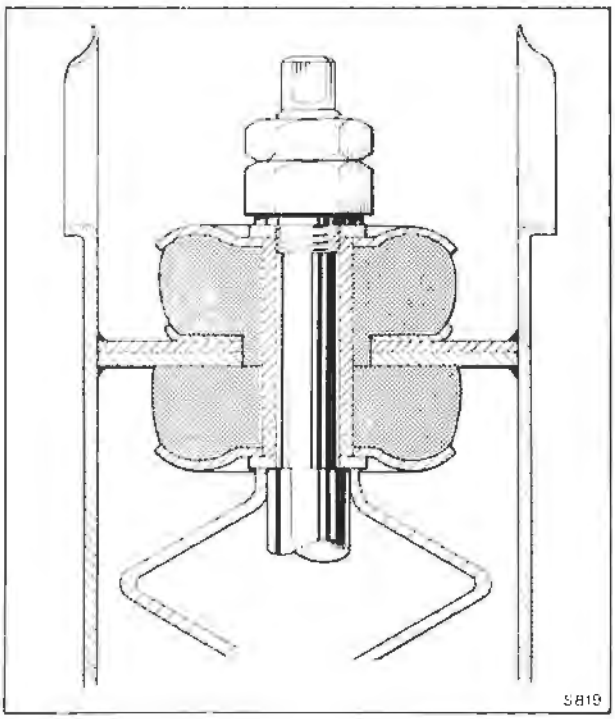

Fig. H37 Damper upper mount (Corniche Convertible)

9. Support the damper lower mounting bracket and remove the four setscrews securing it to the trailing arm.
10. Carefully withdraw the damper from the centre of the spring.
11. If a new damper is to be fitted remove the nuts, cup washer, and rubber then remove the lower mounting bracket.

Shock damper - To fit
All cars prior to car serial number 50 001 except Corniche Convertible
Fit the damper by reversing the procedure given for removal, noting the following.
1. Ensure that the rubber mounts, cupwashers, and distance tube are in a serviceable condition.
2. When fitting the damper care should be taken to ensure that the piston rod is not damaged.
3. Fit the rubber mounts, distance piece and washers to the piston rod end as shown in figure H34.

Torque tighten the full nut and secure with a locknut.

Fit the rubber mounts and washers to the opposite end of the damper as shown in figure H35.

Fit and tighten the full nut and lock-nut so that the top of the lock-nut is level with the end of the damper stem thread.
4. Carefully locate the height control ram on the spring connector tube. Using hook wrench (RH8051) torque tighten the ram onto the connector tube to the figure quoted in Chapter P.
5. Align the height control ram to the spring housing using alignment screws (RH7858 and RH7859). Fit the ram securing setscrews and tighten them progressively. Finally torque tighten them to the figure quoted in Chapter P.
6. Bleed the hydraulic system as described in Chapter G. Check the ram pipe connections for leaks prior to fitting the luggage compartments trims.

Shock damper - To remove
Corniche Convertible cars prior to car serial number 50 001
1. Drive the car onto a ramp and chock the road wheels.
2. Remove the rear seat squab to gain access to the upper mount of the damper.
3. Remove the lock-nut, full nut, cup washer, rubber mount, and distance tube from the top of the damper.
4. Remove the lock-nut, full nut, cup washer and rubber mount from the lower end of the damper.
5. Lift the damper from the trailing arm bracket and carefully lower it from beneath the car.

Shock damper - To fit
Corniche Convertible cars, prior to car serial number 50 001
Fit the damper by reversing the procedure given for removal, noting the following.
1. Ensure that the rubber mounts, cup washers, and distance tube are in a serviceable condition.
2. Ensure that the rubber mounts and washers are

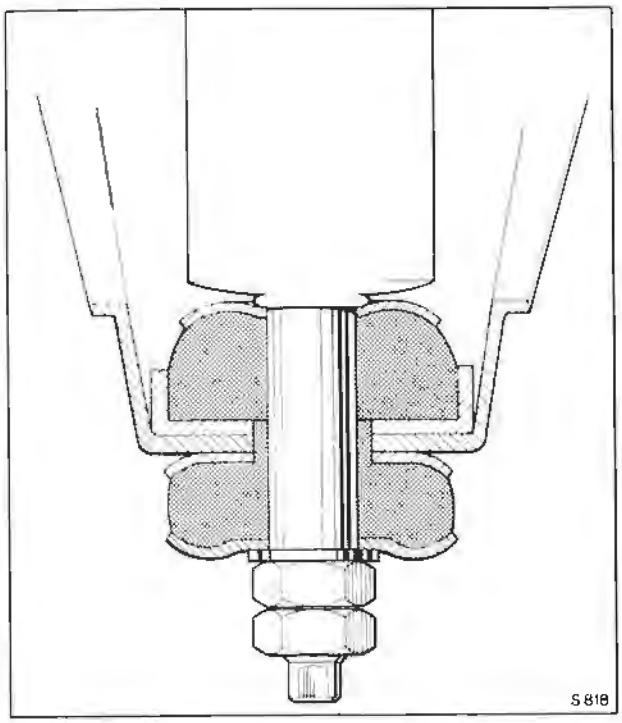

Fig. H38 Damper lower mount (Corniche Convertible)

fitted in their correct position (see Figs. H37 and H38).

3. Torque tighten the full nut on the piston rod end of the damper and secure with a lock-nut.

On the lower end of the damper, tighten the full nut and lock-nut so that the top of the lock-nut is level with the end of the damper stem thread.

Printed in England

© Rolls-Royce Motors Limited 1984

Section H10

Rear road springs

Printed in England

© Rolls-Royce Motors Limited 1984

Introduction

To compensate for variation in spring load poundages, adjusting washers can be fitted to the top of each spring. These washers which are 2,64 mm. (0.104 in.) thick locate on the upper spring seat (see Fig. H40). The maximum number of washers which should be fitted to one spring is seven. A minimum of one washer should always be fitted.

As a temporary measure until a new road spring can be obtained, it is permissible to fit an extra three washers to adjust the car height.

Road spring - To remove

1. Drive the car onto a ramp and chock the front road wheels.

2. Depressurize the hydraulic system as described in Chapter G.

3. Disconnect tha height control valve link from the trailing arm.

4. Disconnect the parking brake cable from the rear caliper mechanism.

5. Disconnect the bottom damper mount.

6. Remove the setscrew securing the rebound strap to the body.

7. Disconnect the drive-shaft from the hub. Care should ba taken to retain the needle roller caps on the universal joint during this operation. Bind the joint with masking tape to retain the roller caps in position, then secure the shaft to the rear crossmember.

Do not pull the shaft outwards or the trunnion joint may be withdrawn from its housing.

8. Position a jack beneath the final drive. Raise the car until maximum body height is achieved with the wheels resting on the ramp.

Important

Care should be taken to ensure that the wheels do not clear the ramp as damage to the crossmember and trailing arms may occur.

9. Support the car body with sill blocks.

10. Lift the road spring over the seating cup on the trailing arm. Lower the spring from the car. On cars other than Corniche Convertible the damper piston rod will have to be raised and lifted with the spring. Care must be taken not to damage the surface of the rod during this operation. The upper spring seat will also be lowered with the spring. Note the number of adjusting washers fitted to the spring.

On convertible cars the adjusting washers are retained on the connector tube with a rubber 'O' ring.

11. Remove the flexible spring seat from the lower spring cup.

Note

On cars conforming to a North American specification, except Camargue, a 12,50 mm. (0.50 in.) thick aluminium packing and a second flexible seating washer should also be removed from the lower spring cup.

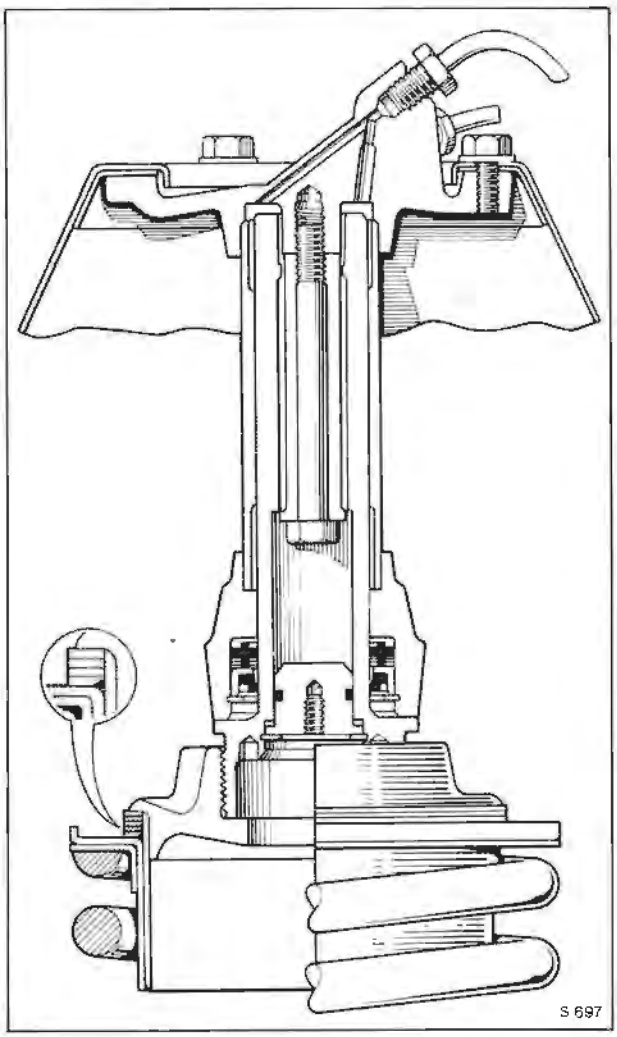

Fig. H39 Spring and height control ram location (Corniche Convertible)

12. If it is necessary to remove the connector tube the height control ram should be removed as described in Chapter G Part 1.

Road spring - To fit (see Figs. H39 and H40)

Fit the spring by reversing the procedure given for removal noting the following.

1. Ensure that the flexible spring seats and adjusting washers are clean and in a serviceable condition. Renew if necessary.

2. Check that the correct number of adjusting

April 1984

TSD 4200

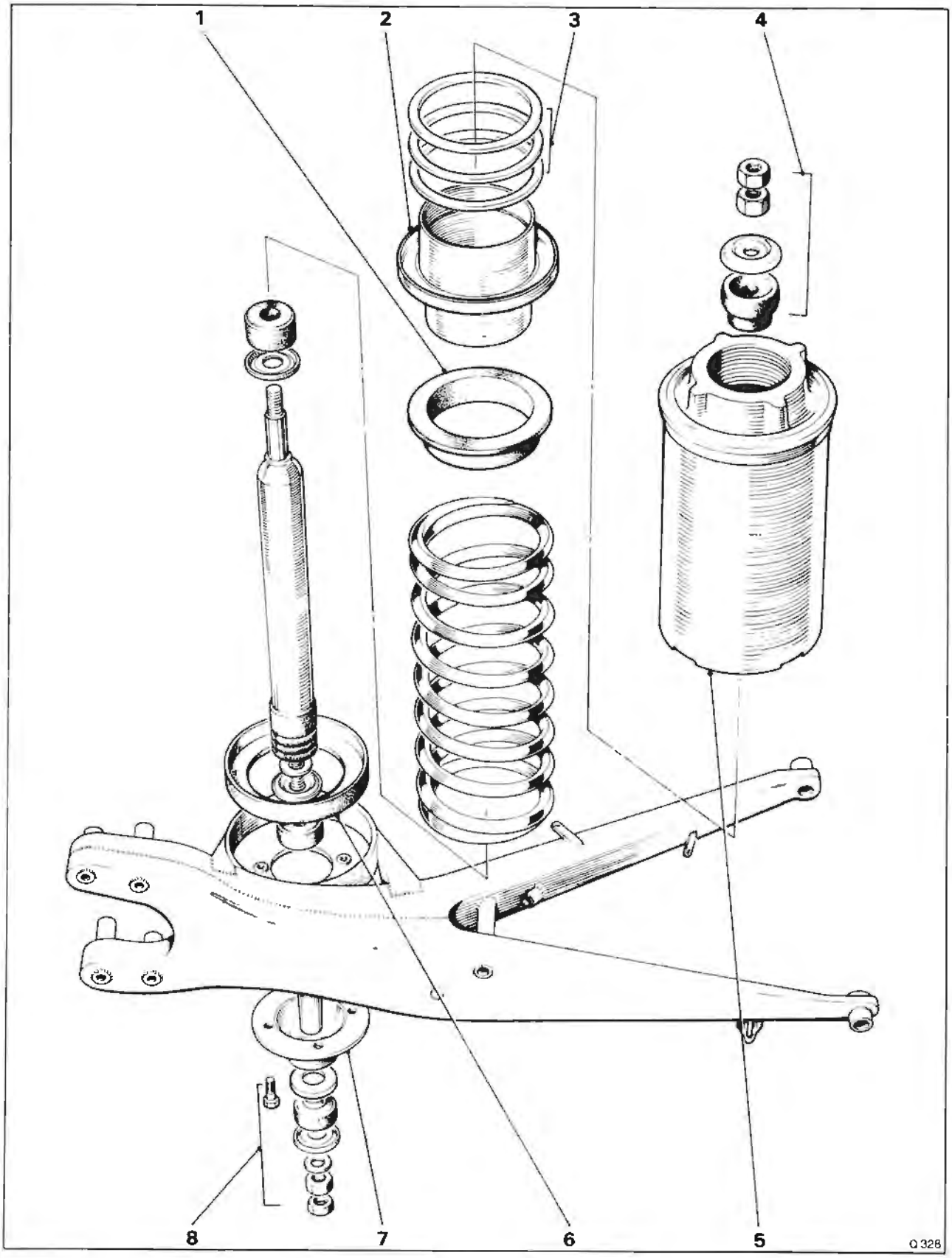

Fig H40 Spring and damper arrangement (all cars except Corniche Convertible)

1 Pliable spring seat
2 Upper spring seat assembly
3 Adjusting washers
4 Damper - Upper mounting components
5 Connector and spigot tube - Height control ram
6 Pliable spring seat
7 Damper bracket
8 Damper - Lower mounting components

Spring loading chart

	Right-hand drive cars				Left-hand drive cars			
	Right-hand spring		Left-hand spring		Right-hand spring		Left-hand spring	
	kgf	lbf	kgf	lbf	kgf	lbf	kgf	lbf
Silver Shadow II	607	1339	580	1279	560	1234	619	1364
Bentley T2	607	1339	580	1279	560	1234	619	1364
Silver Wraith (Non division)	625	1379	614	1354	596	1314	637	1404
Silver Wraith (Division)	675	1490	675	1490	648	1428	676	1490
Corniche Saloon	630	1390	644	1420	594	1310	667	1470
Corniche Convertible	662	1460	653	1440	630	1390	685	1510
Camargue	664	1465	664	1465	626	1380	698	1540

Spring load adjusting washer selection

Number of adjusting washers		1	2	3	4	5	6	7	8	9	10
Packing thickness	mm.	2,64	5,28	7,92	10,57	13,21	15,85	18,49	21,13	23,77	26,42
	in.	0.104	0.208	0.312	0.416	0.520	0.624	0.728	0.832	0.936	1.040
Silver Shadow II Bentley T2 Spring load increase/decrease	kgf	8,62	17,69	26,76	35,83	44,45	53,52	62,60	71,22	80,29	89,36
	lbf	19	39	59	79	98	118	138	157	177	197
Silver Wraith (Non division) Corniche Saloon Corniche Convertible Spring load increase/decrease	kgf	9,53	18,60	28,12	37,65	46,72	56,25	65,77	75,30	84,37	93,90
	lbf	21	41	62	83	103	124	145	166	186	207
Silver Wraith (Division) Camargue Spring load increase/decrease	kgf	9,98	19,96	29,94	39,92	49,90	59,88	69,85	79,83	89,81	99,79
	lbf	22	44	66	88	110	132	154	176	198	220

Note
One adjusting washer will increase or decrease the standing height of the car by 2,720 mm. (0.136 in.)

washers are fitted to the upper spring seat. A minimum of one washer must always be fitted. Refer to the above chart for adjusting washer information

On Corniche Convertible cars renew the rubber 'O' ring used to retain the adjusting washers on the connector tube. Ensure that the special locating washer is fitted last to enable the 'O' ring to locate in the chamfer of the washer (see Fig. H39).

3. Ensure that the drive-shaft universal joint is correctly located in the hub yoke.
4. Roll the car backwards and forwards several times to allow the suspension to settle, then check the car standing height as described in Section H8.

Spring adjustment washer selection
To determine the quantity of adjusting washers required, when fitting a new spring, procede as follows.

1. Obtain the spring load figure from the label attached to the spring.
2. Subtract this figure from the spring load shown on the chart, relevant to the type and side of the car. This will give the load increase required.
3. Using the spring load adjusting washer chart determine the number of washers required.

Important
Always ensure that the correct spring has been obtained, as the spring rate of the springs varies dependent on the car model. This spring rate variation accounts for the variation in spring load and thus the number of washers required, shown on the adjusting washer selection chart.

Printed in England
© Rolls-Royce Motors Limited 1984
April 1984
TSD 4200

Section H11

General dimensions

The illustrations in this section are provided to assist in assessing accident damage to the sub-frame and suspension components.

If damage is suspected the suspension and steering geometry should be checked prior to the removal of components for dimensional examination.

If damage to the sub-frame is suspected, the removal of the complete sub-frame unit will be necessary, for details refer to Section H1.

Suspected damage to the rear crossmember or trailing arms will mean the removal of the complete rear crossmember unit, refer to Section H7.

Printed in England

© Rolls-Royce Motors Limited 1984

April 1984

TSD 4200

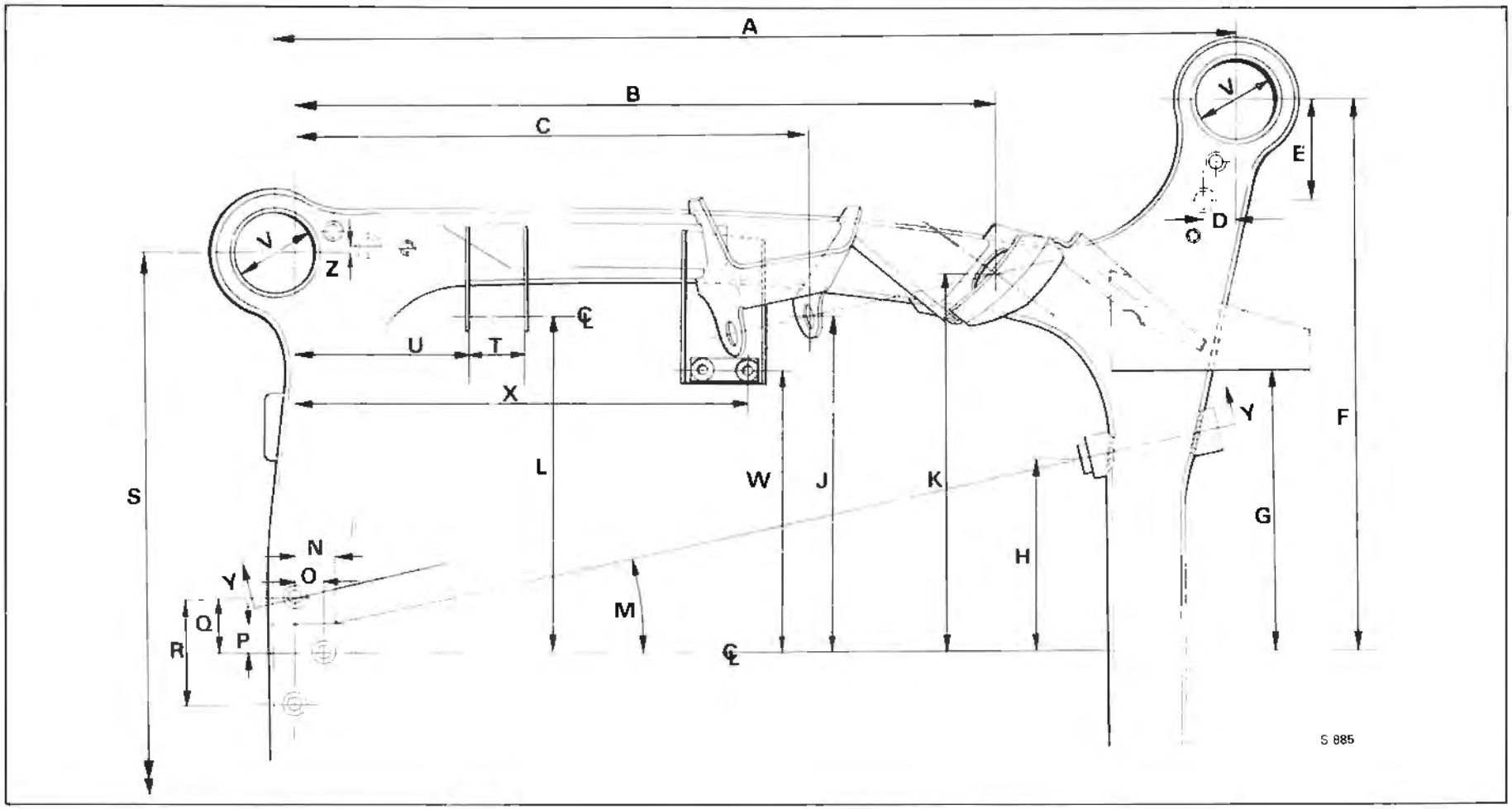

Fig. H41 Front sub-frame (plan view)

A	96,09 cm. (37.832 in.)	**J**	32,90 cm. (12.952 in.)	**R**	10,54 cm. (4.150 in.)
B	71,91 cm. (28.312 in.)	**K**	37,33 cm. (14.698 in.)	**S**	78,74 cm. (31.000 in.)
C	51,91 cm. (20.437 in.)	**L**	33,02 cm. (13.000 in.)	**T**	5,33 cm. (2.098 in.)
D	2,86 cm. (1.125 in.)	**M**	12° 30'	**U**	20,96 cm. (8.250 in.)
E	10,48 cm. (4.125 in.)	**N**	3,81 cm. (1.500 in.)	**V**	6,03 cm. (2.375 in.)
F	55,13 cm. (21.703 in.)	**O**	2,86 cm. (1.125 in.)	**W**	27,00 cm. (10.630 in.)
G	28,58 cm. (11.250 in.)	**P**	2,70 cm. (1.062 in.)	**X**	45,39 cm. (17.869 in.)
H	19,63 cm. (7.727 in.)	**R**	5,27 cm. (2.075 in.)	**Z**	0,79 cm. (0.312 in.)

Y-Y View on side elevation (see fig H42)

© Rolls-Royce Motors Limited 1984
Printed in England

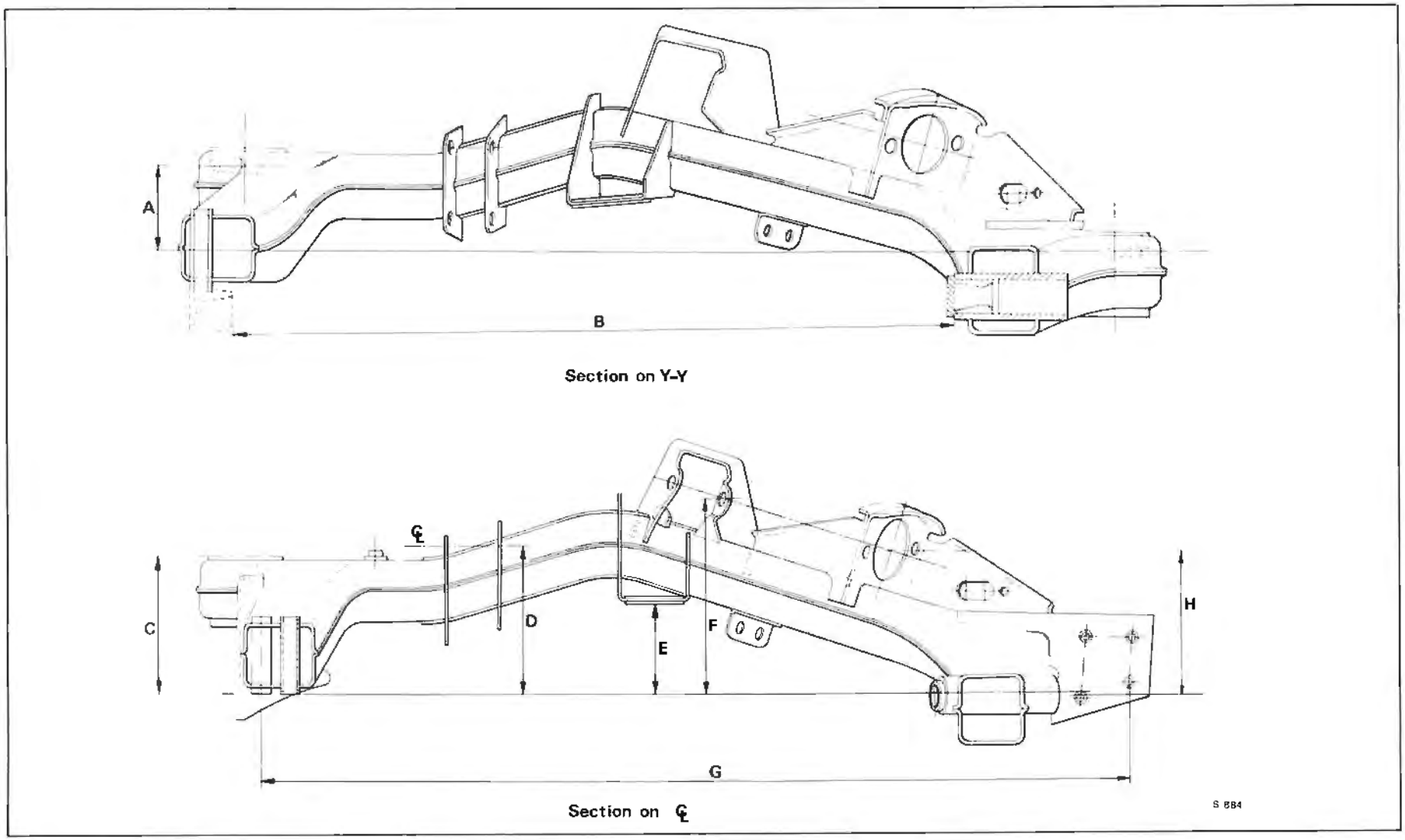

Fig. H42 Front sub-frame (side elevation)

A	8,97 cm. (3.531 in.)	**D**	16,03 cm. (6.312 in.)	**G**	100,75 cm. (39.666 in.)
B	78,26 cm. (30.810 in.)	**E**	10,04 cm. (3.953 in.)	**H**	17,09 cm. (6.729 in.)
C	15,82 cm. (6,228 in.)	**F**	22,16 cm. (8.726 in.)		

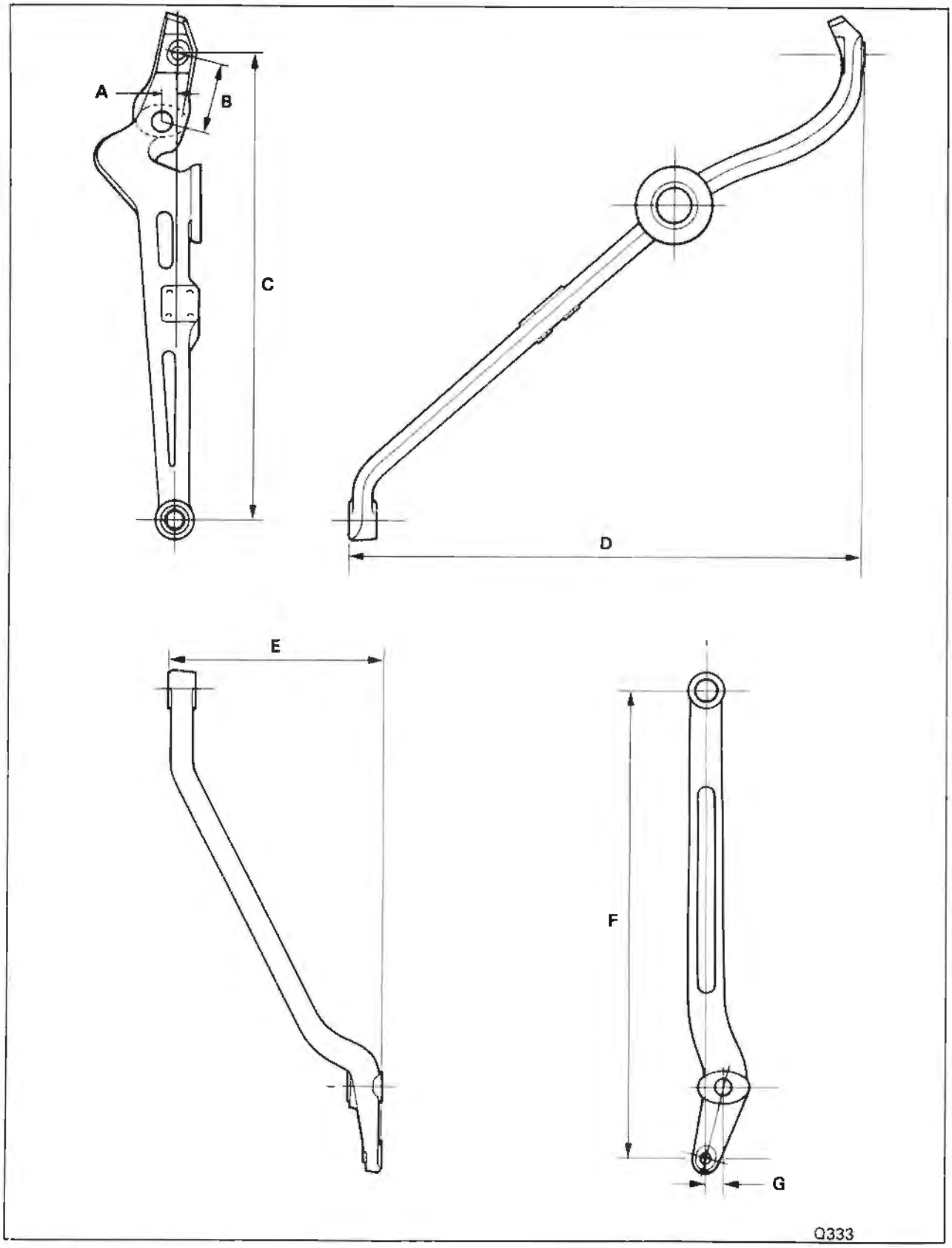

Fig. H43 Triangle levers

A 1,65 cm. (0.650 in.)
B 7,14 cm. (2.812 in.)
C 46,99 cm. (18.50 in.)
D 51,40 cm. (20.238 in.)
E 21,18 cm. (8.337 in.)
F 46,99 cm. (18.50 in.)
G 1,65 cm. (0.650 in.)

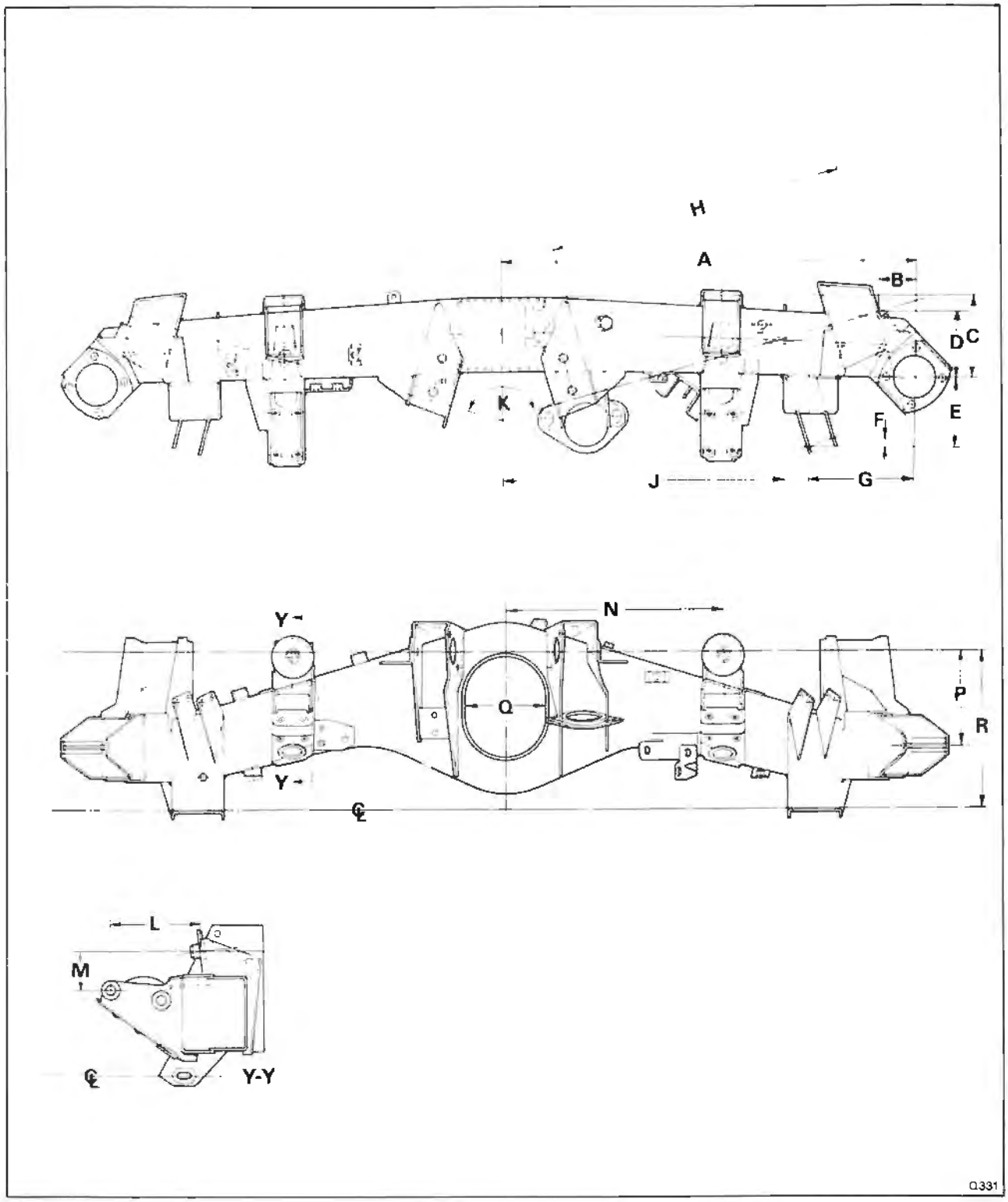

Fig. H44 Rear crossmember

A 57,15 cm. (22.50 in.)
B 5,12 cm. (2.016 in.)
C 11,51 cm. (4.531 in.)
D 9,65 cm. (3.80 in.)
E 9,21 cm. (3.625 in.)
F 0,975 cm. (0.384 in.)
G 14,33 cm. (5.641 in.)
H 40,96 cm. (16.125 in.)
J 39,61 cm. (15.593 in.)
K 147° 36′ reference
L 12,59 cm. (4.956 in.)
M 6,19 cm. (2.437 in.)
N 30,32 cm. (11.937 in.)
P 13,49 cm. (5.312 in)
Q 11,61 cm. (4.570 in.)
R 22,22 cm. (8.750 in.)

Printed in England
© Rolls-Royce Motors Limited 1984
April 1984
TSD 4200

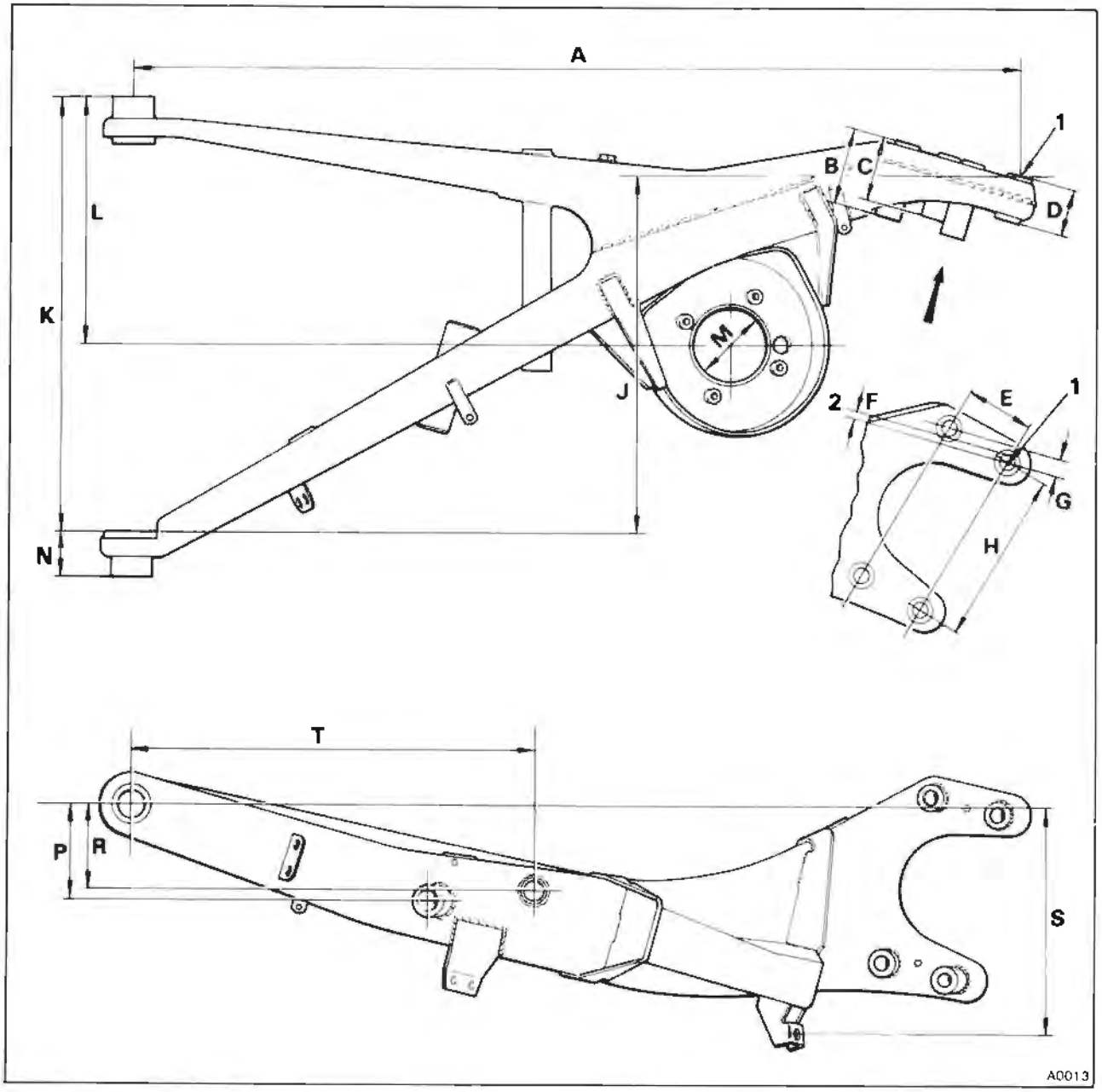

Fig. H45 Trailing arm (right-hand shown)

A	82,41 cm. (32.445 in.)	**G**	1,64 cm. (0.647 in.)	**N**	4,19 cm. (1.650 in.)
B	6,95 cm. (2.737 in.)	**H**	16,07 cm. (6.325 in.)	**P**	8,89 cm. (3.500 in.)
C	5,36 cm. (2.112 in.)	**J**	33,40 cm. (13.150 in.)	**R**	7,87 cm. (3.100 in.)
D	4,09 cm. (1.612 in.)	**K**	40,76 cm. (16.050 in.)	**S**	20,50 cm. (8.073 in.)
E	6,35 cm. (2.500 in.)	**L**	23,28 cm. (9.166 in.)	**T**	37,94 cm (14.937 in.)
F	6,83 mm. (0.269 in.)	**M**	7,09 cm (2.790 in.)	**1**	Datum point
				2	Datum line

Section H12

Workshop tools

Front sub-frame

RH 7768	Extraction and insertion tool - ball joint
RH 7774	Castellated tube spanner - sub-frame mounts
RH 7775	Castellated tube spanner - upper ball joint
RH 7813	Spanner - open ended - lower triangle lever ball joint
RH 7849	'C' spanner - bump stops
RH 7850	'C' spanner - rebound stops
RH 7874	8ox spanner - damper ball joint
RH 7909	Compressing tool - front road spring
RH 8019	Extractor - stabilizer links
RH 8030	Box spanner and locking bar - shock dampers
RH 8100	Extractor - steering ball pins
RH 8809	Spring retainer - front road springs

Rear sub-frame

RH 7847	Centralizing tool - crossmember end mounts
RH 7848	Split packing ring - crossmember end mount
RH 7849	'C' spanner - bump stops
RH 7858	Alignment screws (long) 2 off -height control ram
RH 7859	Alignment screw (short) 1 off - height control ram
RH 8048	Pin spanner and extraction bar - height control ram - convertible cars
RH 8051	Hook wrench - height control ram

Printed in England
© Rolls-Royce Motors Limited 1984
March 1984
TSD 4200

Chapter H

Part II
Rear sub-frame and suspension

Applicable to Corniche and Camargue cars from serial number 50 001

Section

H1m Rear sub-frame unit
H2m Rear sub-frame mounts and stabilizer
H3m Rear road springs
H4m Rear suspension settings
H5m General dimensions
H6m Workshop tools

All Section, Page and Figure references are prefixed (m) to denote cars filled with hydraulic system mineral oil.

Printed in England

© Rolls-Royce Motors Limited 1979

June 1979

TSD 4200

Section H1m

Rear sub-frame and suspension

Printed in England

Introduction

The rear sub-frame comprises a rear crossmember and a final drive crossmember with frame tubes fixed at angles between the two components to form a space frame assembly.

The trailing arms which are designed to give a swing axle effect, are attached to the rear crossmember. Each trailing arm carries a rear hub assembly and a mounting plate for the suspension strut lower mount. The stabilizer which is attached to both trailing arms is also mounted on the rear crossmember.

The final drive crossmember supports the final drive unit. Drive-shafts transmit the drive from the unit to the rear hubs.

The sub-frame assembly is secured to underbody brackets by the use of rubber mounts fitted at each end of the crossmembers.

Small longitudinal dampers are mounted at the ends of the rear crossmember to resist any forward or rearward movement of the sub-frame.

Warning

When the rear sub-frame is removed from the car, on no account must the frame tubes or crossmembers be dismantled unless an alignment jig is available for re-assembly.

Rear sub-frame and final drive unit - To remove

1. Drive the car onto a ramp and chock the front wheels.



Fig. H1m Rear sub-frame, and associated components

1 Rear crossmember
2 Frame tubes
3 Final drive crossmember
4 Brackets for final drive mounts
5 Hub unit
6 Trailing arm
7 Crossmember mount

© Rolls-Royce Motors Limited 1984

April 1984

TSD 4200

2. Depressurize the hydraulic systems as described in Chapter G Part 1 1.
3. Move the gear range selector lever to the N Neutral position.
4. Disconnect the battery.
5. Remove the rear sections of the exhaust systems as described in Chapter Q.
6. Remove the rear wheel trims and slacken the wheel nuts.
7. Place a jack beneath the final drive casing and raise the rear of the car. Support the body on sill blocks.
8. Support the trailing arms with jacks and remove the rear road wheels.
9. Remove the rear road springs as described in Section H3m.
10. Disconnect the height control valve actuation links from the trailing arms.
11. Disconnect the brake hoses from the trailing arm brackets. Fit blanking plugs to the hose and pipe ends.
12. Disconnect the suspension strut from the rear of each trailing arm.
13. Disconnect the parking brake cables from the operating lever on the rear hubs. Pull back the convoluted sleeves to expose the outer cable securing nuts. Release the nuts and feed the cables through the slot in the brackets. Detach and ring clip supporting each cable beneath the rear stabilizer.
14. Remove the propeller shaft as described in Chapter F.
15. Disconnect the fuel pump inlet and outlet hoses. Fit blanks to the hose ends and pump ports. Disconnect the electrical connections from the pump.
16. Disconnect the earth braid from the rear of the final drive crossmember.
17. Remove the small damper situated at each end of the rear crossmember.
18. Fit a frame similar to that shown in figure H2m onto a trolley jack. Raise the jack and position the frame beneath the sub-frame with the central pad beneath the final drive casing. The two arms should support the trailing arms and the forward pan should support the rear crossmember.
19. With the sub-frame fully supported, remove the four bolts securing the rubber mounts to the body mounting brackets. On the right-hand side of the car

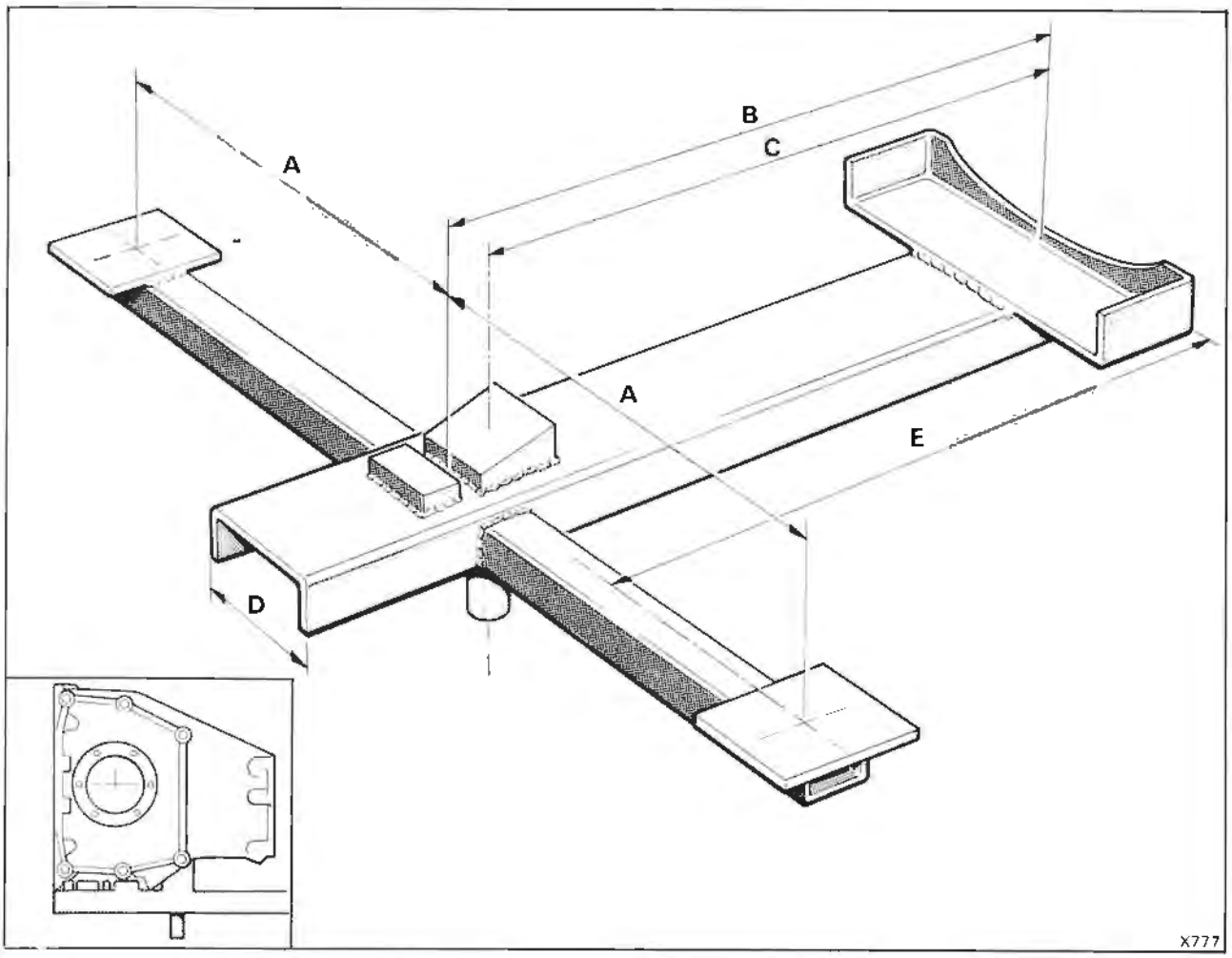

Fig. H2m Rear sub-frame removal jig general dimensions

A 635 mm. (25.0 in.)
B 673 mm. (26.5 in.)
C 610 mm. (24.0 in.)
D 127 mm. (5.0 in.)
E 635 mm. (25.0 in.) Inset Jig to final drive location

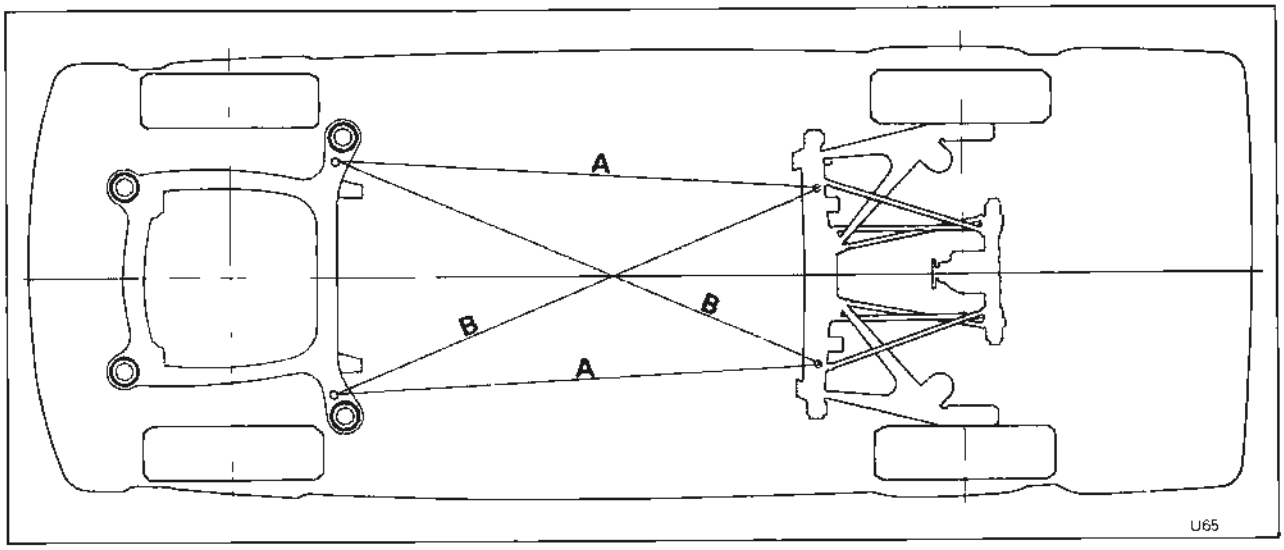

Fig. H3m Sub-frame alignment
Measurements to be equal within 1,60 mm. (0.062 in.)

access to the rear mounting bolt nut can be obtained by removing the grommet from the front wall of the luggage compartment well.

20. Carefully lower the sub-frame from beneath the car. When the sub-frame is clear of obstructions, pivot the support and sub-frame through 90° to allow the frame to pass between the ramp channels. If the ramp is too narrow to allow the sub-frame to be lowered in this manner, the sub-frame should be lowered onto the ramp and then carefully manoeuvred from beneath the car.

Note

When lifting the sub-frame assembly with a hoist, use pick-up points across the trailing arms and under the final drive unit. The rear crossmember should also be supported. **Do not lift the sub-frame on the frame tubes.**

Rear sub-frame and final drive unit - To fit

Fit the sub-frame and final drive unit assembly by reversing the removal procedure noting the following:

1. Inspect all the mounts and components for serviceability. Renew as necessary.

2. Ensure that the front and rear sub-frame are aligned by measuring the longitudinal and diagonal distances between the machined fixture locating pads (see Fig. H3m).

These measurements must be equal to within 1,60 mm. (0.062 in.).

3. Check the rear crossmember setting (see Fig. H7m) as described in Section H2m under Rear crossmember mounts - To renew.

4. When fitting the rear road springs ensure that the correct number and sequence of standing height washers are maintained.

5. Do not tighten the exhaust system joints until the pipes have been manoeuvred to obtain the best alignment which is free from possible fouls. When checking clearances always take into account the exhaust growth that will occur during engine running.

6. Bleed the hydraulic system as described in Chapter G Part 11.

7. Check the standing and levelled height as described in Section H4m and Chapter G Part 11.

8. Torque tighten all nuts and setscrews to the figures quoted in Chapter P.

Frame tubes - To replace

If damage occurs to one or more of the frame tubes they can be replaced using the following method.

Important

Always ensure that all suspension load has been removed from the sub-frame prior to the removal of the frame tube bolts. Only remove one frame tube at a time.

1. Drive the car onto a ramp and chock the front wheels.

2. Move the gear range selector lever to the P Park position.

3. Depressurize the hydraulic systems as described in Chapter G Part 11.

4. Support the final drive unit with a jack.

5. Insert a spring retention tool (RH 9299) through the centre of each lower spring support. Screw the tool fully into the upper spring support.

Warning

Always examine the spring retention tool for signs of thread wear or damage prior to its use. Renew the tool if necessary.

6. Raise the rear of the car until the spring load is removed from the trailing arms. Position sill blocks beneath the car sills to support the body. Ensure the trailing arms are supported by the road wheels.

7. Remove one of the small dampers situated beneath each end of the rear crossmember and insert a jury bolt (RH 9575) as shown in figure H4m. With the jury bolt in position, replace the damper from the other end of the crossmember with a jury bolt.

Printed in England
© Rolls-Royce Motors Limited 1984
April 1984
TSD 4200

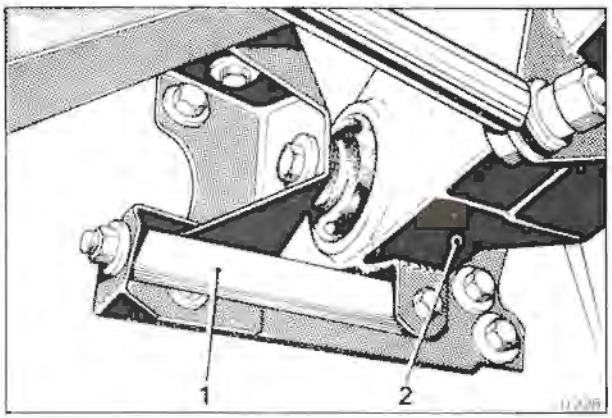

Fig. H4m Jury bolt in position
1 Jury bolt
2 Rear crossmember

The jury bolts should not exert any load on the crossmember.

8. Before removing the frame tube, note the mounting of the tube to the bracket, the bolt insertion direction and the washer positions.

The tube end faces are offset to allow the tube centre line to lie along the location face of the crossmember bracket. Ensure that the new tube is fitted in this manner.

9. Remove the frame tube.

10. Place the new frame tube into position. The alignment of the holes between the frame tube and the crossmember brackets should allow the securing bolts to be inserted without having to apply force to the tube or crossmember.

11. If alignment is correct fit and torque tighten the frame tube securing bolts.

Should hole misalignment be evident the cause should be investigated. Do not release the torque arm or other frame tubes to obtain hole alignment. This can cause sub-frame movement, resulting in incorrect sub-frame settings and necessitating the removal of the sub-frame to obtain correct alignment on a setting jig.

12. When all the frame tubes are secured, remove each jury bolt in turn and fit the small damper.

13. Remove the spring retention tools and all jacks and blocks.

14. With the gear range selector lever in the P Park position, remove the gear change isolator from the fuseboard.

15. Start and run the engine to pressurize the hydraulic systems.

Bump stop - To renew

1. Chock the front wheels.

2. Jack up the rear of the car and remove the road wheel.

3. Remove the two setscrews securing the bump stop.

4. Fit the new bump stop and torque tighten the setscrews to the figure quoted in Chapter P.

Note

On Corniche cars conforming to a North American specification a 14,22 mm. (0.560 in.) packing is fitted between the bump stop and the body.

Rebound stop

The rebound stop is incorporated into the rear suspension strut and no maintenance is necessary.

Printed in England

© Rolls-Royce Motors Limited 1984

April 1984

TSD 4200

Section H2m

Rear sub-frame mounts and stabilizer

Introduction

The rubber sub-frame mounts can be renewed with the sub-frame in position. Always ensure when carrying out the renewal operations that all suspension load is removed from the sub-frame and that the frame tubes are not put under stress.

Never use the frame tubes to support or lift the sub-frame.

Warning

Always examine the spring retention tool (RH9299) for signs of thread wear or damage prior to its use. Renew the tool if necessary.

Rear crossmember mounts - To renew (sub-frame in position)

1. Drive the car onto a ramp and chock the front wheels.

2. Move the gear range selector to the P Park position.

3. Depressurize the rear suspension struts as described in Chapter G Part 11.

4. Screw a compression tool (RH9299) into each bell shaped spring support to retain the springs in their compressed condition.

5. Place a jack under the final drive and raise the rear of the car. Support the body on sill blocks.

6. Support the trailing arms with jacks. Raise the trailing arm sufficiently to allow the mount extractor to be fitted into position on the rear crossmember.

7. Remove the small damper fitted below the rear crossmember.

8. Scribe around the edges of the body bracket to assist in correctly positioning the bracket on assembly.

9. Support the rear crossmember with a jack positioned near to the end of the crossmember. Remove the nut and washer from the long bolt fitted through the rubber mount. Adjust the supporting jack to allow the bolt to be easily withdrawn.

10. Remove the setscrews securing the mounting bracket to the body. Carefully slide the bracket down between the body and the rear crossmember.

11. Position the extraction components of tool (RH9291) onto the mount (see Fig. H9m). Tighten the draw bar until the mount is withdrawn from the crossmember. Remove the old mount and the extraction cup from the tool.

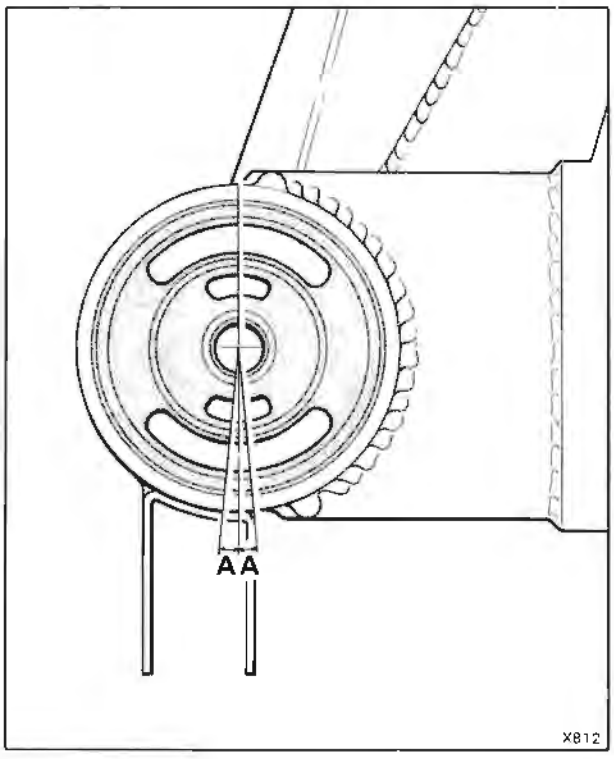

Fig. H5m Rear crossmember mount alignment
A Holes to be within 5° of vertical centre line

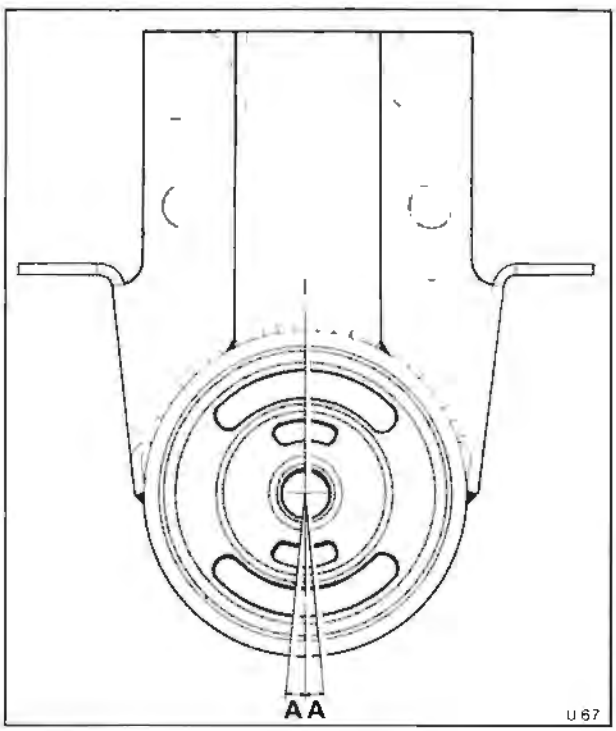

Fig. H6m Final drive mount alignment
A Holes to be within 5° of vertical centre line

12. Check that the bore and rim of the housing are free from burrs and damage. Lightly lubricate the bore with Molytone C or equivalent grease.
13. Locate a new mount in position on the crossmember. Fit tool (RH9291) using the insertion components. Ensure that the slots in the rubber of the mount are positioned as shown in figure H5m. Tighten the tool draw bar to draw the new mount into the sleeve of the crossmember until the mount is fully inserted. Remove the tool.
14. Remove any grease that may have been deposited on the rubber of the mount using a soap solution and water.
15. Slide the mounting bracket between the body sill and the crossmember. Position the bracket to the lines scribed in Operation 8 then torque tighten the setscrews.
16. Fit the long mounting bolt with the washers positioned as shown in figure H7m.
17. Release the compression tool retaining the spring.
18. Remove the jacks and sill blocks.
19. Check the distance between the large buffer washer and the edge of the crossmember sleeve. This dimension should be between 10,16 mm. and 12,07 mm. (0.40 in. and 0.475 in.). If this dimension is incorrect adjust the mounting bracket to obtain the correct clearance.
20. Fit the small sub-frame damper.
21. Torque tighten all nuts and setscrews to the figures quoted in Chapter P.

Final drive crossmember mounts - To remove (see Fig. H8m)
1. Drive the car onto a ramp and chock the rear wheels.
2. Move the gear range selector lever to the P Park position.
3. Remove the spare wheel from its carrier, then raise the carrier.
4. Support the final drive unit with a jack.
5. Before removing any of the mount components, scribe lines around the washers on the mounting plates connecting the final drive crossmember to the rubber mounts. These lines will assist in correctly locating the components and centralizing the final drive upon assembly.
6. To remove the right-hand mount, remove the two mounting plates connecting the final drive crossmember to the rubber mount. Access to the bolts is provided through holes in the front face of the luggage

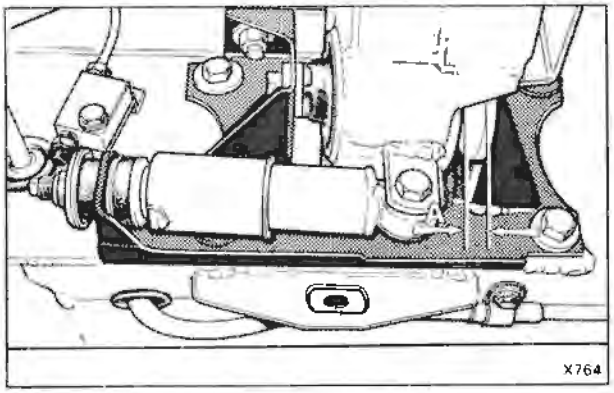

Fig. H7m Rear crossmember mount and damper
A 10,60 mm. to 12,07 mm. (0.40 in. to 0.475 in.)

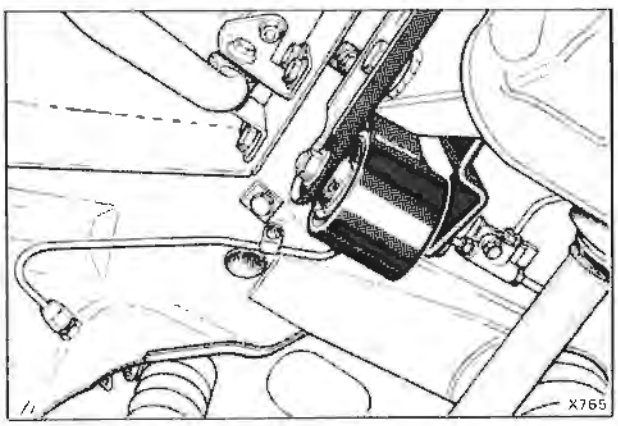

Fig. H8m Final drive crossmember mount (left-hand shown)

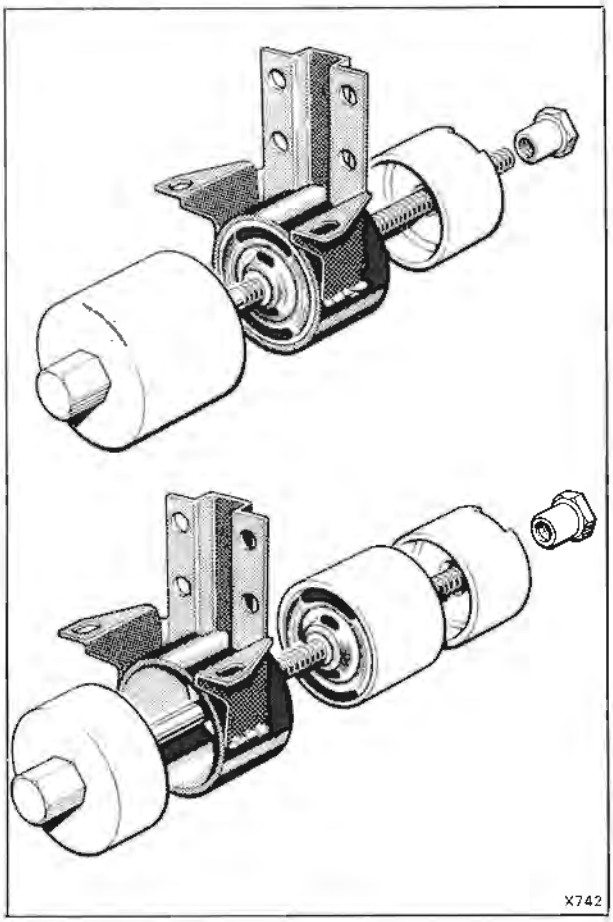

Fig. H9m Mount extraction and insertion tool

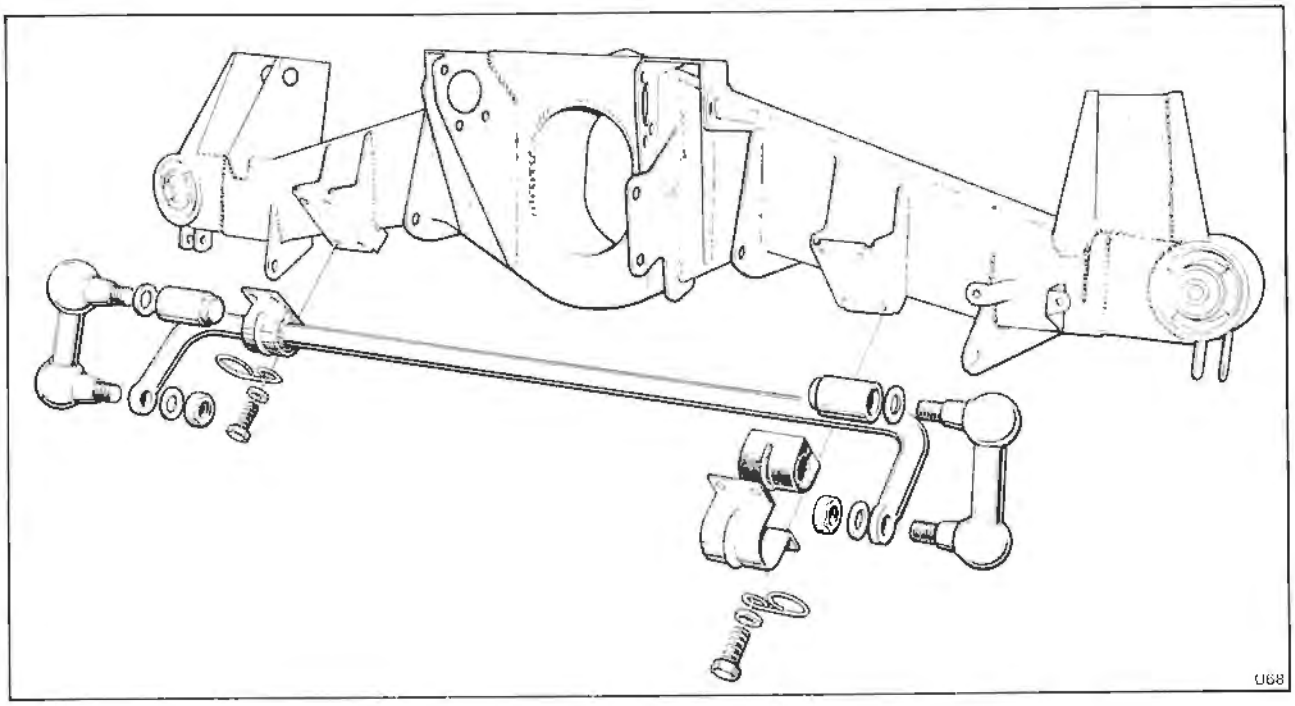

Fig. H10m Rear stabilizer components

compartment stowage well, by removing two grommets.

7. Remove the two setscrews and four nuts and bolts to release the mount from the body. The four bolts are fitted through the front face of the luggage compartment stowage well.

8. To remove the left-hand mount (see Fig. H8m), remove the two mounting plates connecting the final drive crossmember to the rubber mount.

9. Remove the two setscrews and four nuts and bolts securing the mount. This will also release part of the spare wheel support bracket.

10. Remove the mount, then replace the bolts to support the spare wheel carrier bracket.

11. Remove the mount from its housing using the extraction components of tool (RH9291) as shown in figure H9m.

12. Check that the bore and rim of the housing are free from burrs and damage. Lightly lubricate the bore with Molytone C or equivalent grease.

13. Fit a new mount into the housing using the insertion components of tool (RH9291) as shown in figure H9m. Ensure that the slots in the mount are positioned as shown in figure H6m.

14. Remove any grease that may have been deposited on the rubber of the mount using a soap solution and water.

15. Fit the mounts to the body by reversing the removal procedure.

16. Torque tighten the setscrews and nuts to the figures quoted in Chapter P.

17. Ensure that the rubber grommets are fitted into the front face of the luggage compartment stowage well when applicable.

Rear stabilizer bar - To remove (see Fig. H10m)

1. Slacken, but do not remove the reach nuts which secure the stabilizer links to the trailing arms.

2. Using a hammer and a soft metal drift placed on the reach nut, separate the stabilizer link tapers from the trailing arms. Remove the reach nuts.

3. Remove the brackets attaching the stabilizer mounting bushes to the crossmember.

4. Remove the stabilizer bar and rubber mounting bushes.

5. To remove the stabilizer links from the stabilizer bar repeat Operations 1 and 2.

Rear stabilizer - To fit

Fit the stabilizer by reversing the removal procedure noting the following.

1. Examine the stabilizer mounting bushes and links for serviceability. Renew if necessary.

2. Loosely assemble the links into the trailing arms.

3. Fit the stabilizer onto the links then secure the stabilizer bar onto the crossmember. Fit the brake cable support clips on the lower setscrews.

4. Torque tighten the link nuts to the figures quoted in Chapter P.

Note

On Corniche and Camargue cars conforming to a North American specification, from serial number 50447 (including 50401, 50402, 50408, 50421 to 50434, 50436, 50438 and 50440 to 50445) the stabilizer bar has been modified.

Always ensure when fitting new stabilizer mounts that the hole in the mount is correct for the stabilizer being fitted.

Printed in England

© Rolls-Royce Motors Limited 1984

Section H3m

Rear road springs

Printed in England

© Rolls-Royce Motors Limited 1984

Introduction
The rear road spring assembly comprises of a road spring, upper and lower bell shaped support, adjusting rings, and pliable spring seats. The adjusting rings, are each 1,22 mm. (0.048 in.) thick and are used to obtain the correct spring load and car standing height. Each ring is equivalent to a spring load increase of 3,63 kgf. (8 lbf.) and will increase the car height by approximately 1,778 mm. (0.070 in.).

Warning
Always examine the spring retention tool (RH9299) for signs of thread wear or damage prior to its use. Renew the tool if necessary.

Rear road spring - To remove

1. Drive the car onto a ramp and chock the front wheels.
2. Move the gear range selector lever to the P Park position.
3. Support the final drive unit with a jack.
4. Insert spring retention tool (RH9299) through the centre of the lower spring support. Screw the tool fully into the upper spring support.
5. Lift the rear of the car until the suspension is in the full rebound position. Position sill blocks beneath the car sills to support the body.
6. Carefully manoeuver the spring from its seat and remove it from between the trailing arm and the body.
7. Remove the spring seats and adjusting rings from the spring.

Note
On certain Corniche cars conforming to a North American specification an additional spacer and seat are fitted beneath the normal spring seat and adjusting rings (see Fig. H11m).

8. Remove the two dowels from the baseplate of the spring compression tool (RH7909) and fit adapter block (RH9504).
9. Position the compressed spring into the compression tool with the upper spring support in the adapter block (see Fig. H12m).
10. Fit the top plate of the tool. Screw down the

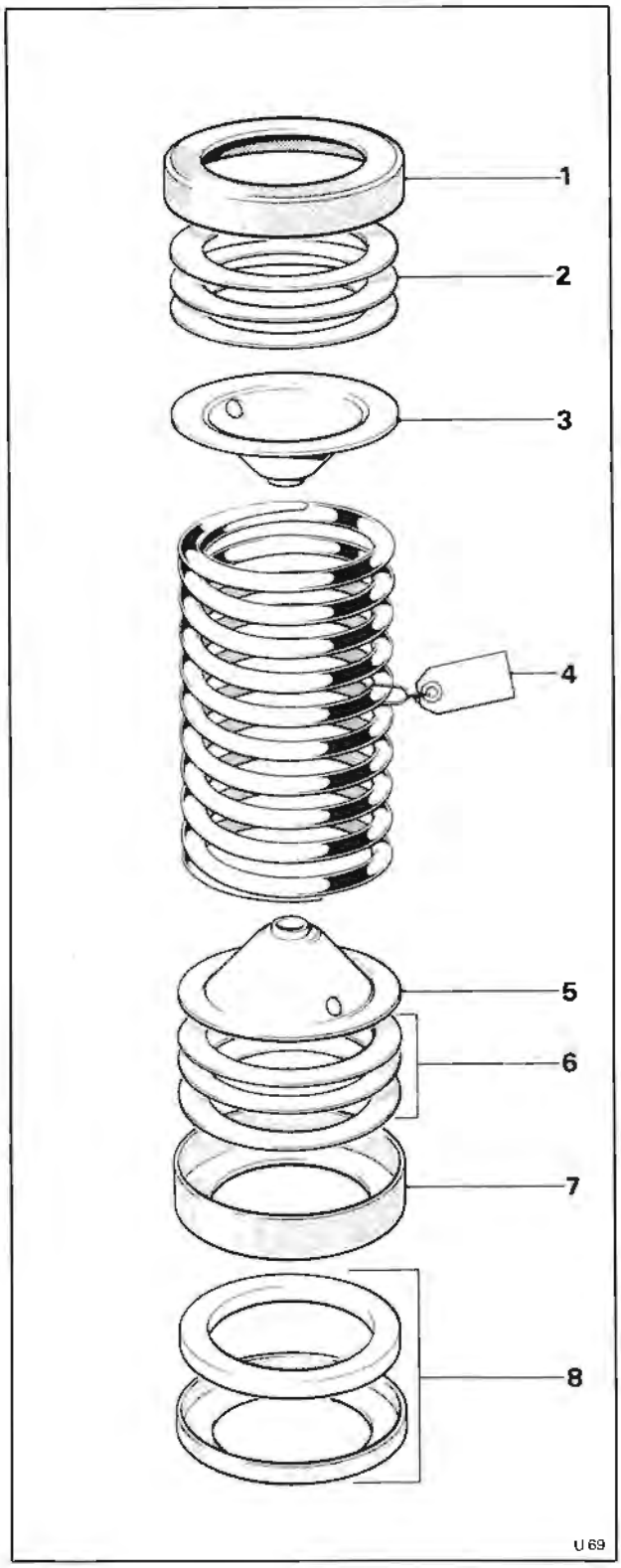

Fig. H11m Rear road spring assembly
1 Pliable spring seat
2 Adjusting rings
3 Screwed bell-shaped support
4 Spring loading label
5 Plain bell-shaped spring support
6 Adjusting rings
7 Pliable spring seat
8 Special 8,89 mm. (0.350 in.) thick spacer and shortened, pliable spring seat

April 1984

TSD 4200

Spring loading chart

	Cars other than those conforming to a North American specification		Cars conforming to a North American specification	
	kgf.	lbf.	kgf.	lbf.
Corniche saloon	606	1336	615	1358
Corniche convertible	646	1424	660	1454
Camargue	660	1454	660	1454

Spring loading washer selection

Number of adjusting washers	1	2	3	4	5	6	7	8
Packing thickness mm.	1,22	2,44	3,66	4,88	6,09	7,31	8,53	9,75
in.	0.048	0.096	0.144	0.192	0.240	0.288	0.336	0.384
Spring load kgf.	3,63	7,26	10,89	14,51	18,14	21,77	25,40	29,03
increase/decrease lbf.	8.0	16.0	24.0	32.0	40.0	48.0	56.0	64.0
Standing height mm.	1,78	3,56	5,33	7,11	8,89	10,67	12,45	14,22
increase/decrease in.	0.070	0.140	0.210	0.280	0.350	0.420	0.490	0.560
Number of adjusting washers	9	10	11	12	13	14	15	16
Packing thickness mm.	10,97	12,19	13,41	14,63	15,85	17,07	18,28	19,50
in.	0.432	0.480	0.528	0.576	0.624	0.672	0.720	0.768
Spring load kgf.	32,66	36,29	39,92	43,54	47,17	50,80	54,43	58,05
increase/decrease lbf.	72.0	80.0	88.0	96.0	104.0	112.0	120.0	128.0
Standing height mm.	16,00	17,78	19,56	21,34	23,11	24,89	26,67	28,45
increase/decrease in.	0.630	0.700	0.770	0.840	0.910	0.980	1.050	1.120

special nuts and thrust washers to secure the spring.
11. Measure and record the distance between the upper and lower plates.
12. Remove the spring retention tool (RH9299).
13. Evenly unscrew the two nuts on the compression tool to completely extend the spring.
14. Examine all the components for serviceability. Ensure that the threads in the upper spring support are in good condition to withstand the full spring load when the retention tool is inserted.

Road spring - To fit

1. Fit the spring and spring supports into the compression tool. The threaded support should rest in the baseplate adapter.
2. Evenly tighten the tool nuts to compress the spring until the measurement taken during spring removal is achieved.
3. Screw the spring retention screw (RH9299) into the threaded spring support to retain the spring in its compressed condition.
4. Remove the spring compression tool (RH7909) and the adapter block (RH9504).
5. Obtain the spring load figure from the label attached to the spring.
6. Refer to the spring adjustment chart above to ascertain the correct number of adjusting rings required.

One adjusting ring is equivalent to 3,63 kgf. (8 lbf.) therefore to achieve the correct nominal load multiples of this figure should be added to the load figure quoted on the spring label. This will give the number of rings required.
7. Ensure the trailing arm is in the full rebound position.
8. Fit the spring by placing a pliable seating and half the required number of adjusting rings estimated in Operation 6, into the trailing arm spring location.

On Corniche cars conforming to a North American specification fitted with the additional 9,0 mm. (0.350 in.) thick packing and special flexible seat, these should be fitted first.
9. Place the remainder of the adjusting rings and a flexible seat over the upper spring support. Position the spring in the body spring cup.
10. Raise the trailing arm until the spring is held in position.

Note

Always ensure that the rings used are clean and that no foreign matter becomes trapped between them during assembly.

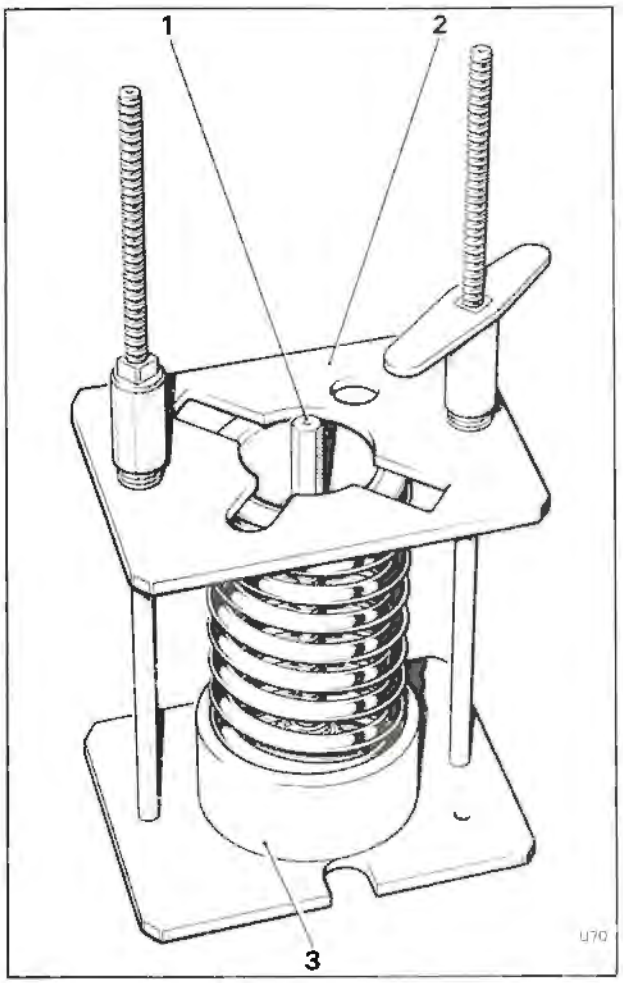

Fig. H12m Spring compressing tools in position
1 Tool RH9299 and thrust washer
2 Tool RH7909
3 Adapter block RH9504

11. Remove the sill blocks and lower the car onto its wheels.
12. Carefully remove the spring retention tool from the centre of the spring.
13. Lower the ramp to the ground.
14. Roll the car backwards and forwards until the wheels attain a stable camber angle.
15. Check the car standing height as described in Section H4m.

Printed in England
© Rolls-Royce Motors Limited 1984

Section H4m

Rear suspension settings

Printed in England

© Rolls-Royce Motors Limited 1984

Introduction

Following operations in which the suspension has been partially or fully dismantled, the standing and levelled height of the car should be checked.

For details of the procedure required for setting the levelled height refer to Chapter G Part I 1.

To allow the suspension to settle after assembly, drive the car back and forth before carrying out the standing height checks.

Standing height - To check

1. The height must be checked with a full tank of fuel. If however the tank is partially empty, weight equivalent to the amount of missing fuel should be positioned adjacent to the fuel tank.

For each 4,5 litres (1 Imp. gal., 1.2 US gal. of missing fuel add 3,4 kg. (7.5 lb.) of weight.

2. Ensure that the spare wheel, jack, tools, and accessories are fitted in their relevant positions.

3. Check the tyre pressures and correct if necessary.

4. Drive the car onto a suitable level ramp and chock the front road wheels.

5. Move the gear range selector lever to the P Park position. Remove the gear change isolator from the fuseboard and release the parking brake.

6. Start and run the engine. Allow the hydraulic systems to fully pressurize.

7. Disconnect both height control valve links at the ball joints on the trailing arms.

8. Simultaneously raise both control valve links approximately 40 mm. (1.5 in.) and allow the car to level.

Note

There should be a delay before the car starts to level after raising the control valve links. This delay can vary with different cars and variations in engine speed. Always allow approximately two minutes for the levelling process to be completed.

9. Slowly pull down both control valve links approximately 25 mm. (1.0 in.) to exhaust the hydraulic pressure from the rear suspension struts. Allow three minutes for the car to stabilize.

10. Check that the standing height of the front suspension is correct as described in Section H6.

11. Measure the height from the level surface on which the car stands to the centre of the foremost bottom bolt securing the sub-frame mounting bracket to the sill (see Fig. H13m dimension A).

12. Measure the height from the level surface to the centre of the rear bolt attaching the parking brake linkage to the trailing arm (see Fig. H13m dimension B).

13. Subtract dimension B from dimension A. The resultant figure should be within the following tolerances.

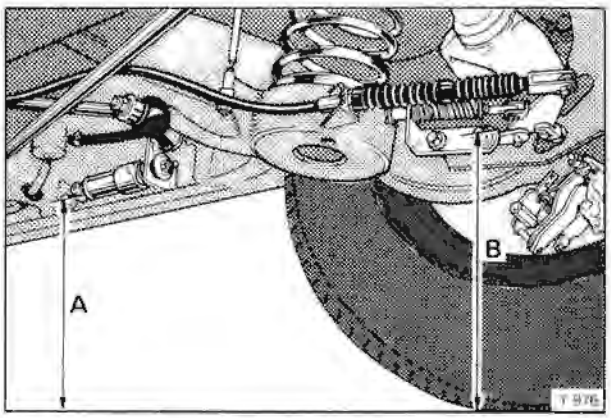

Fig. H13m Rear height setting

A Floor to centre line of body bracket setscrew

B Floor to centre line of parking brake linkage bracket setscrew

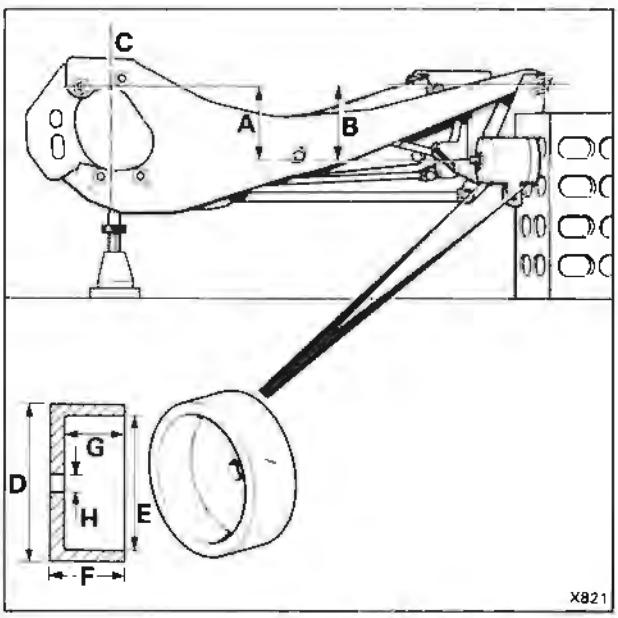

Fig. H14m Camber and toe-in setting

A 134,9 mm. (5.312 in.)

B 141,8 mm. (5.582 in.)

C Wheel centre line

D 76,2 mm. (3.00 in.)

E 66,8 mm. (2.63 in.)

F 25,4 mm. (1.0 in.)

G 15,2 mm. (0.625 in.)

H 9,9 mm. (0.391 in.)

Note
The standing height setting is dependant on the springs and suspension components fitted to the car.

When checking the standing height reference should be made to the Spring loading charts in Section H3m.

Cars listed in Spring loading chart
Applicable to cars other than Corniche built to a North American specification.
+ 12,5 mm. and + 4,5 mm. (+ 0.50 in. and + 0.175 in.)

Applicable to Corniche cars built to a North American specification.
+ 27,5 mm. and + 19,5 mm. (+ 1.10 in. and + 0.770 in.)

14. If the standing height is incorrect, add or remove the required number of packing washers to or from the spring seats. The quantity should be equally divided between the top and bottom seats.
15. When the standing height is correct, the height control valve links should be adjusted as described in Chapter G Part 11.

Trailing arm camber - To set
1. Mount the crossmember on a surface table as shown in figure H14m.
2. Fit the trailing arms to the crossmember (see Fig. H15m) and set them in the 'normal ride' position using small screw jacks situated beneath each arm.
3. Tighten the centre bolt of the inner bush and the bolts of the frame tube mounting bracket on each trailing arm.
4. Tighten the centre bolt of the outer bush sufficiently to remove end play but still allow trailing arm movement.

Ensure that the location plate is suitably positioned.

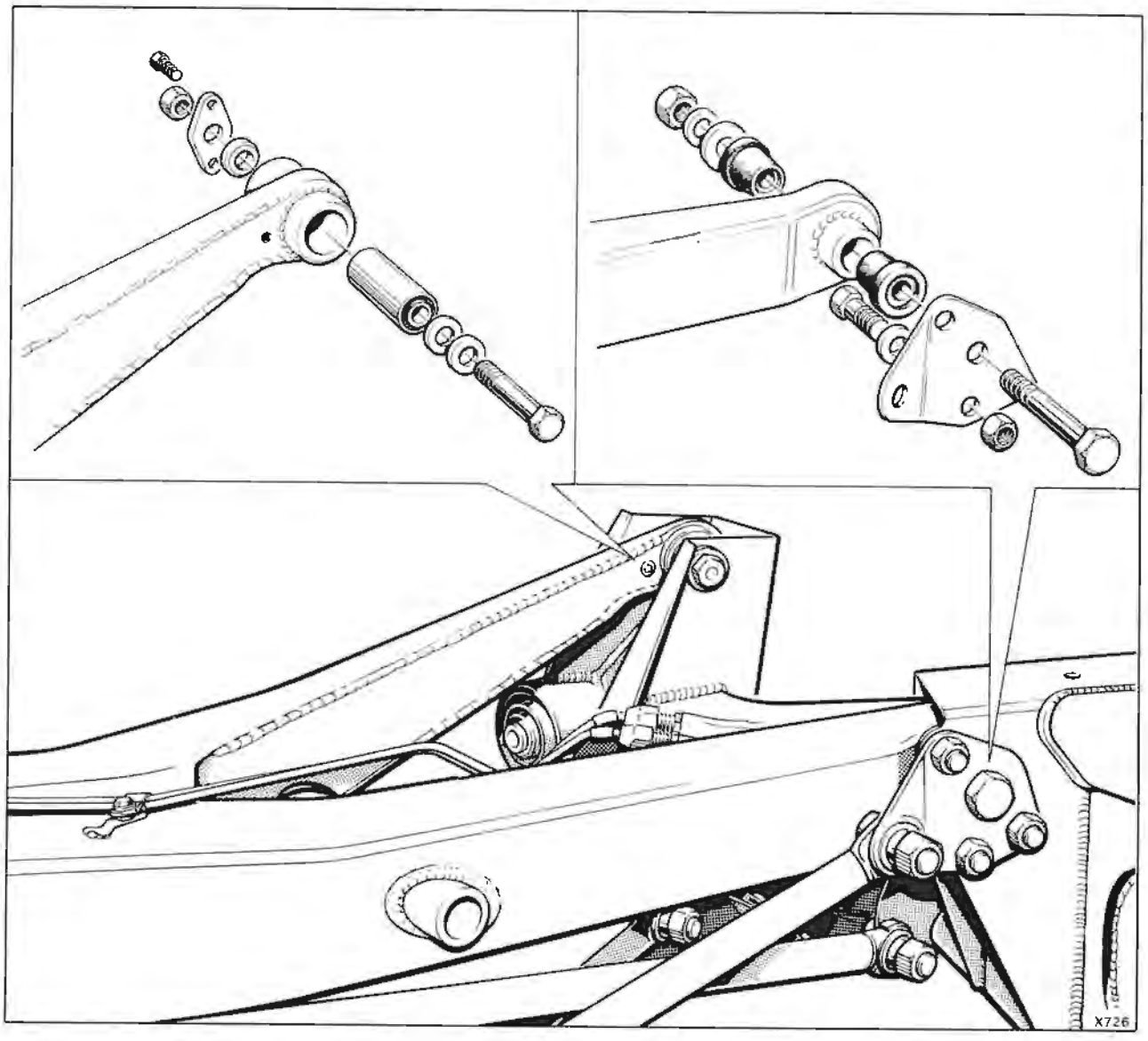

Fig. H15m Trailing arm pivot components

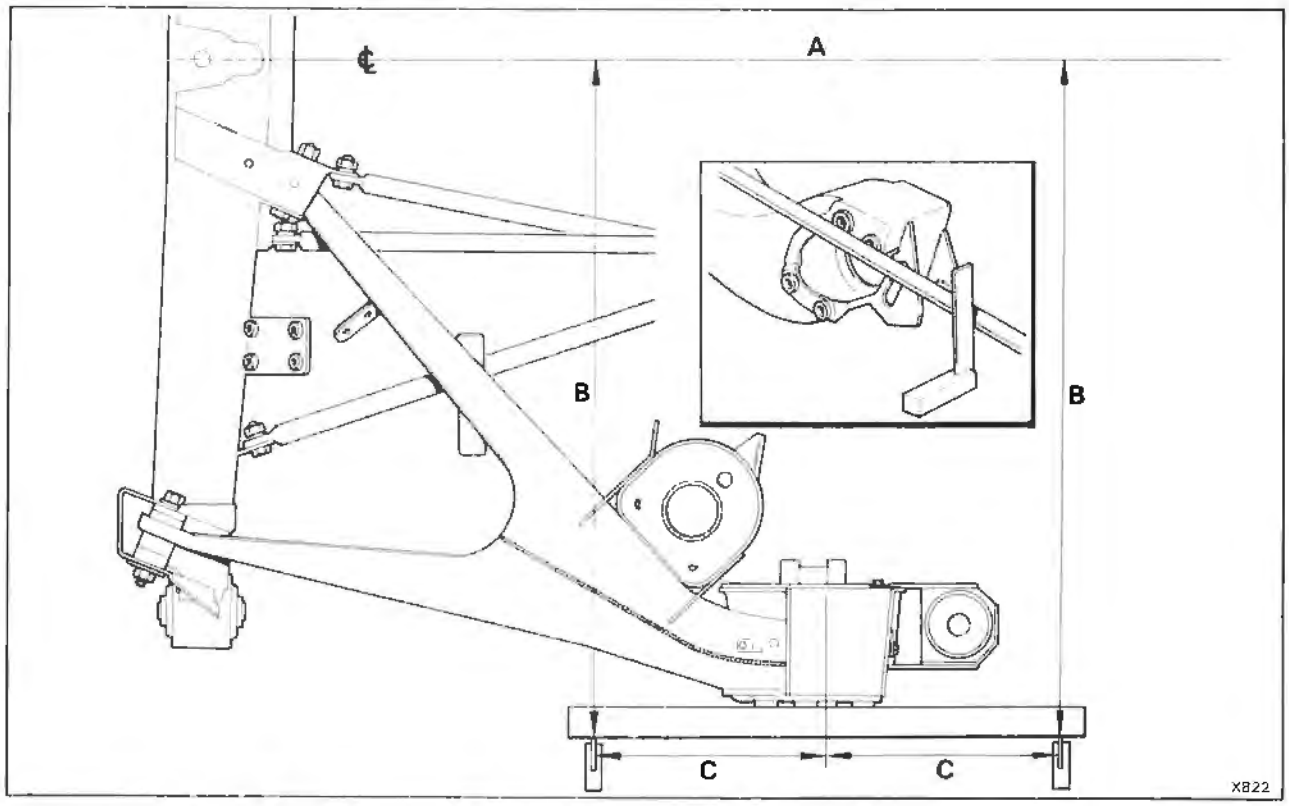

Fig. H16m Checking the toe-in setting

A Centre line marked on surface table
B Measurement from engineers square to centre line across the surface of the table
C 208 mm. (8.20 in.) from road wheel centre

5. Using suitable camber setting equipment or a precision square across the upper and lower faces of the hub location tubes, check the camber of the trailing arm. The setting must be between minus 0° 15′ and plus 0° 15′. The trailing arm settings must be within 0° 15′ of each other.
6. Tighten the outer bush centre bolt.
7. Check the toe-in of each trailing arm. Adjustment of the camber will also alter the toe-in, therefore it is necessary to adjust both settings until a satisfactory position is obtained.

Toe-in - To check (see Fig. H16m)

1. Mount the crossmember on a surface table as shown in figure H14m.
2. Mark a centre line between the centre of the rear crossmember and the final drive crossmember.
3. Place a straight edge across the hub mounting tubes to give the equivalent of the road wheel rim diameter.

With the aid of a set square positioned 216 mm. (8.20 in.) from the centre line of the hub nut mounting tubes (see Fig. H16m), measure the distance from the base of the square to the centre line on the table.
4. Repeat the measurement from the other side of the hub centre line.
5. Compare the measurements taken on each side of the hub.

The toe-in reading for one wheel to the centre line on the surface table should be between 1,35 mm. and 1,8 mm. (0.053 in. and 0.071 in.).

If the toe-in is incorrect adjust the outer trailing arm mounting point in the crossmember then tighten the centre bolt.

Adjustment to the toe-in will also alter the camber, therefore it is necessary to adjust both camber and toe-in until a satisfactory position is obtained.
6. Repeat the procedure for the other trailing arm until a satisfactory reading of camber and toe-in for both wheels is obtained.

The maximum permissable toe-in differential between each side of the car is 0,38 mm. (0.015 in.).
7. On completion, torque tighten the centre bolts to the figures quoted in Chapter P. Repeat the toe-in and camber checks.
8. Secure the outer location plates in position. It will be necessary to drill two 4 mm. (0.156 in.) diameter holes in each crossmember bracket to accept the self-tapping securing screws.

Printed in England
© Rolls-Royce Motors Limited 1984
April 1984
TSD 4200

Section H5m

General Dimensions

The illustrations in this section are provided to assist in assessing accident damage to the sub-frame and suspension components.

If damage is suspected the suspension should be checked prior to the removal of components for dimensional examination.

If damage to the sub-frames is confirmed, the removal of the complete sub-frame unit will be necessary, for details refer to Section H1m.

Printed in England

© Rolls-Royce Motors Limited 1984

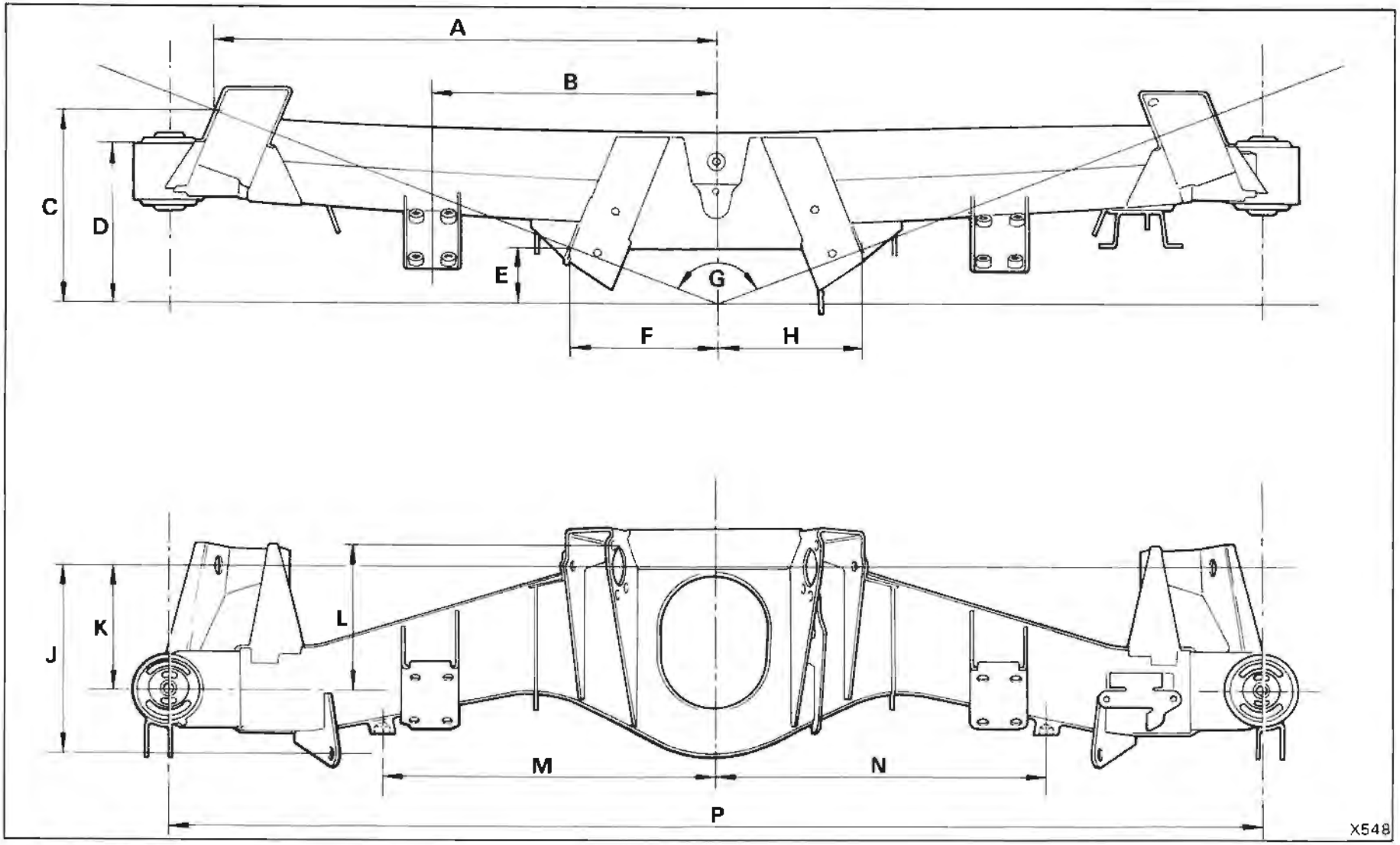

Fig. H17m Rear crossmember

A	535,46 mm. (21.081 in.)	**F**	355,60 mm. (14.000 in.)	**L**	152,40 mm. (6.000 in.)
B	304,80 mm. (12.000 in.)	**G**	136° 43'28"	**M**	355,60 mm. (14.000 in.)
C	212,42 mm. (8.363 in.)	**H**	355,60 mm. (14.000 in.)	**N**	355,60 mm. (14.000 in.)
D	177,87 mm. (7.003 in.)	**J**	203,20 mm. (8.000 in.)	**P**	1172,72mm. (46.170 in.)
E	61,62 mm. (2.426 in.)	**K**	134,92 mm. (5.312 in.)		

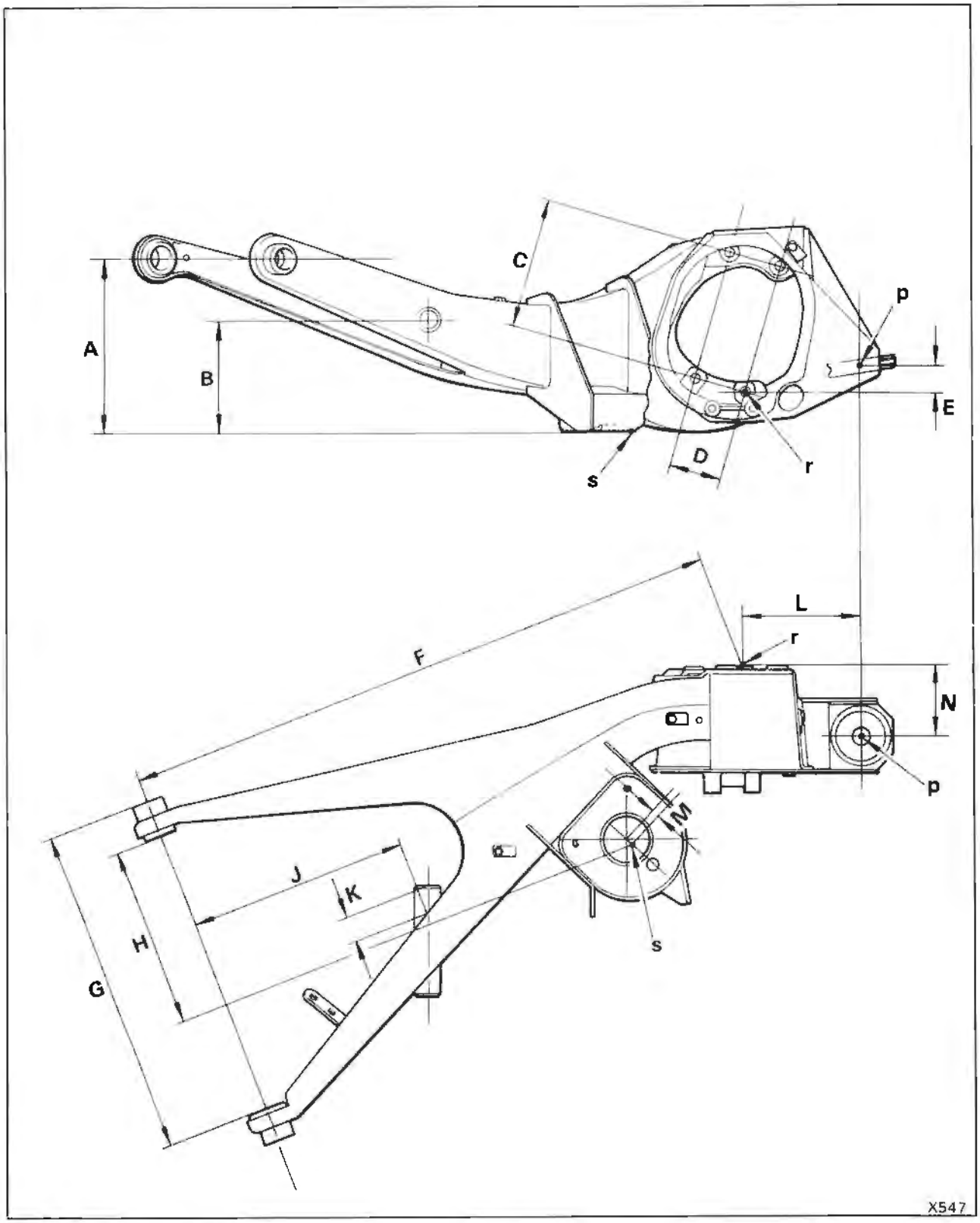

Fig. H18m Trailing arms (right-hand shown)

A	210,50 mm. (8.287 in.)	**H**	224,50 mm. (8.839 in.)
B	135,50 mm. (5.334 in.)	**J**	271,75 mm. (10.699 in.)
C	160,66 mm. (6.325 in.)	**K**	31.00 mm. (1.220 in.)
D	63,50 mm. (2.500 in.)	**L**	143,75 mm. (5.659 in.)
E	36,00 mm. (1.417 in.)	**M**	7,14 mm (0.281 in.)
F	747,20 mm. (29.417 in.)	**N**	86,30 mm. (3.398 in.)
G	407,70 mm. (16.051 in.)		p.r.s. reference points

Printed in England

© Rolls-Royce Motors Limited 1984

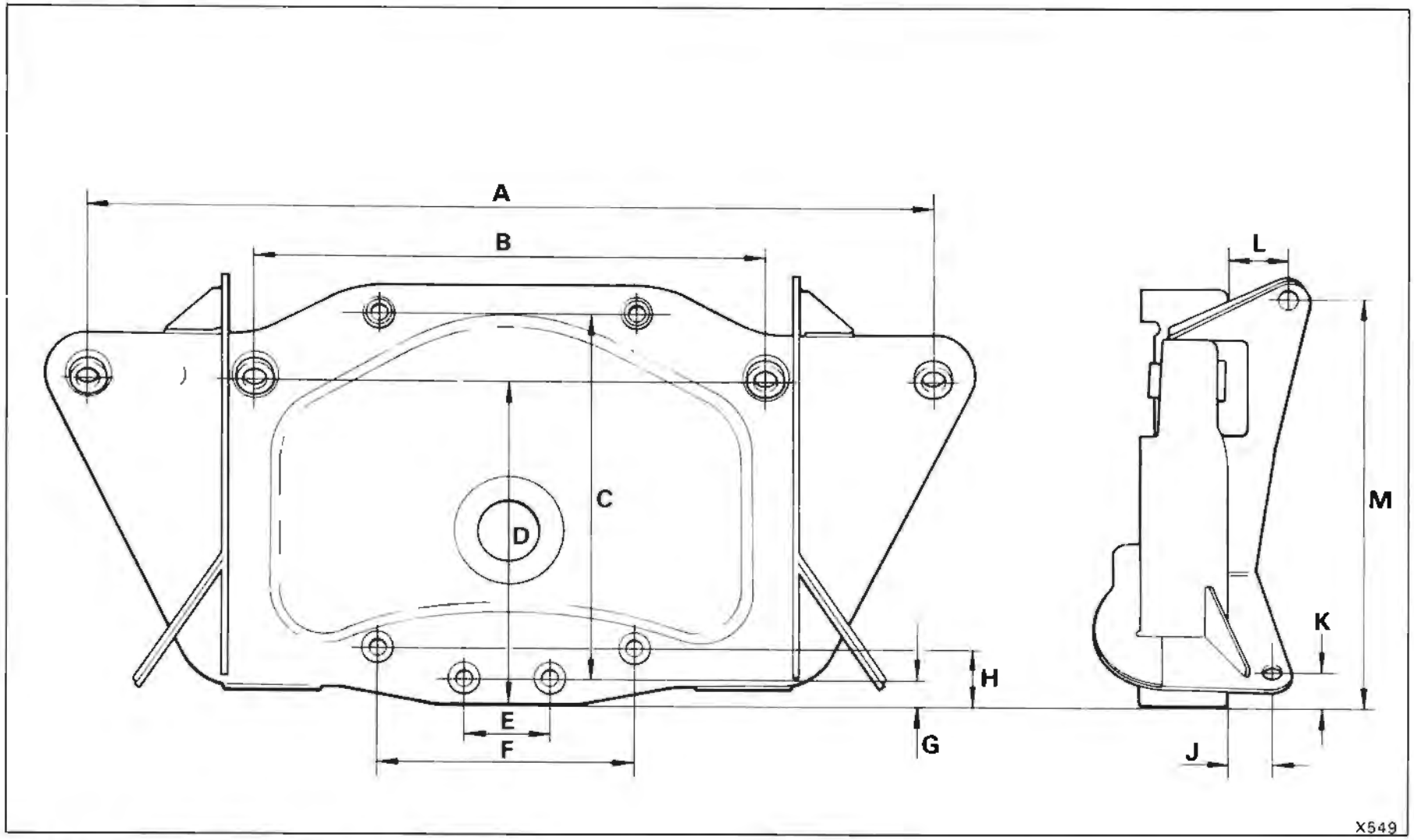

Fig. H19m Final drive crossmember

A	565,15 mm. (22.250 in.)	**E**	57,15 mm. (2.250 in.)	**J**	32,54 mm. (1.281 in.)
B	341,30 mm. (13.437 in.)	**F**	171,45 mm. (6.750 in.)	**K**	22,22 mm. (0.875 in.)
C	247,02 mm. (9.725 in.)	**G**	17,45 mm. (0.687 in.)	**L**	41,28 mm. (1.625 in.)
D	219,89 mm. (8.657 in.)	**H**	37,77 mm. (1.487 in.)	**M**	275,44 mm. (10.844 in.)

© Rolls-Royce Motors Limited 1984
Printed in England

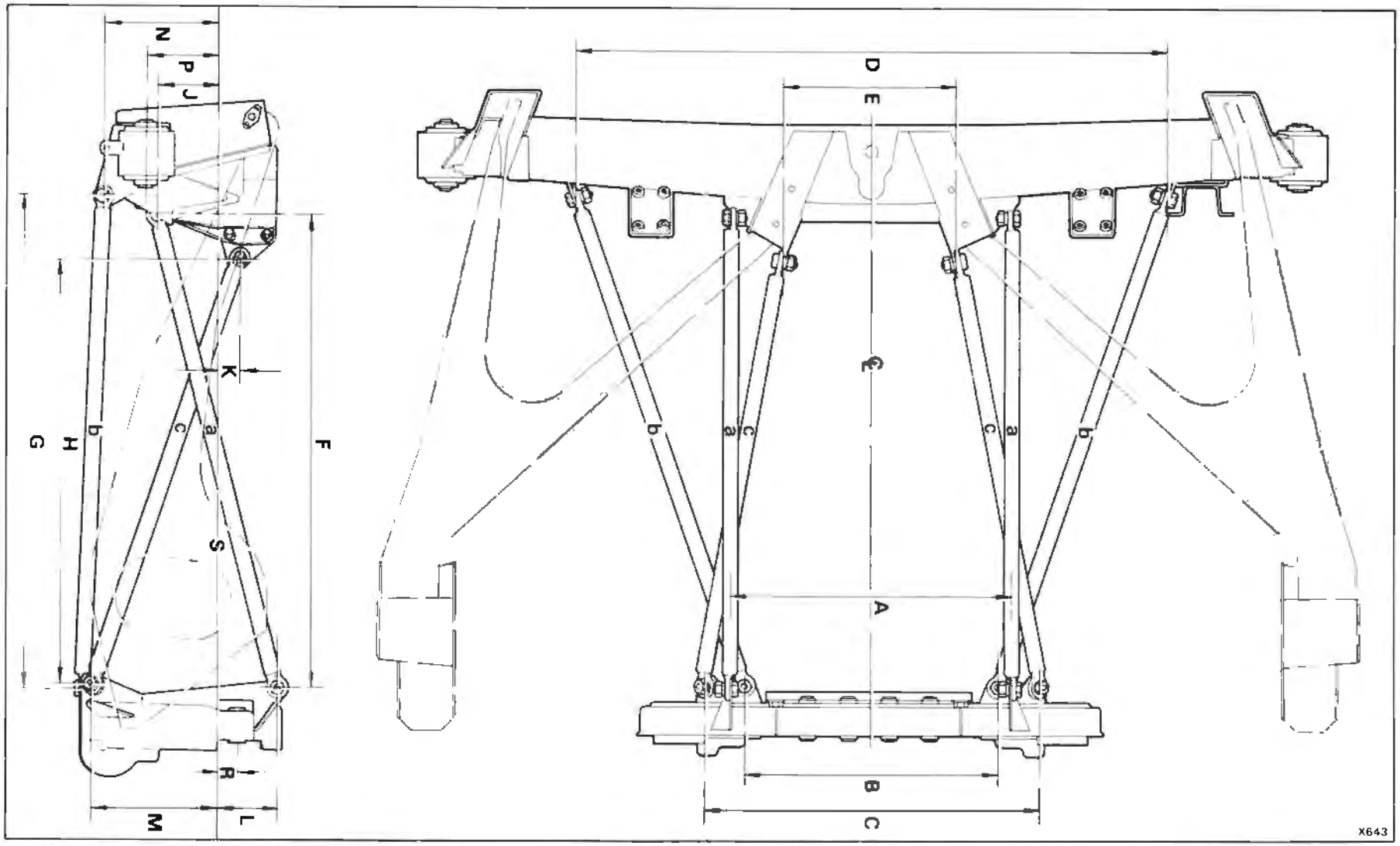

Fig. H20m Rear sub-frame assembly

A	381,00 mm. (15.00 in.)	**F**	655,65 mm. (25.813 in.)	**L**	76,20 mm. (3.00 in.)	**S**	Horizontal datum line
B	350,52 mm. (13.80 in.)	**G**	690,58 mm. (27.188 in.)	**M**	177,80 mm. (7.00 in.)	**a**	Frame tube
C	482,60 mm. (19.00 in.)	**H**	577,04 mm. (22.718 in.)	**N**	165,10 mm. (6.50 in.)	**b**	Frame tube
D	819,15 mm. (32.250 in.)	**J**	91,44 mm. (3.60 in.)	**P**	96,82 mm. (3.812 in.)	**c**	Frame tube
E	233,68 mm. (9.20 in.)	**K**	22,23 mm. (0.875 in.)	**R**	19,63 mm. (0.773 in.)		

Section H6m

Workshop tools

RH 7909	Compression tool - road spring
RH 9291	Extraction and insertion tool - rear sub-frame mounts
RH 9299	Retainer bolt - rear road spring
RH 9504	Adspter block - road spring compression tool
RH 9575	Jury bolt - rear sub-frame

Printed in England

© Rolls-Royce Motors Limited 1984

April 1984

TSD 4200

Chapter J

Final drive

This chapter is in two parts.

Part I is applicable to Silver Shadow II, Bentley T2, Silver Wraith II, Corniche and Camargue cars prior to serial number 50 000.

Part II is applicable to Corniche and Camargue cars from serial number 50 001.

It should be noted that in Part II all Section, Page and Figure references are prefixed (m) to denote cars filled with hydraulic system mineral oil.

Printed in England

© Rolls-Royce Motors Limited 1979

July 1979

TSD 4200

Chapter J

Part I
Final drive

Applicable to Silver Shadow II, Bentley T2, Silver Wraith II, Corniche and Camargue cars prior to serial number 50 000.

Section

J1 Final drive
J2 Half-shafts
J3 Final drive crossmember
J4 Rear hubs
J5 Dimensional data
J6 Workshop tools

Printed in England

© Rolls-Royce Motors Limited 1979

July 1979

TSD 4200

Chapter J

Issue record sheet 1

May 1978

The dates quoted below refer to the issue date of individual pages within this chapter.

Section	J1	J2	J3	J4	J5	J6
Page No.						
1	May 78	May 78	May 78	May 78	May 78	May 78
2	May 78	May 78		May 78	May 78	
3	May 78	May 78		May 78		
4	May 78					
5	May 78					
6	May 78					
7	May 78					
8	May 78					
9						
10						
11						
12						
13						
14						
15						
16						
17						
18						
19						
20						
21						
22						
23						
24						
25						
26						
27						
28						
29						
30						
31						
32						
33						
34						
35						
36						
37						
38						
39						
40						
41						
42						
43						
44						
45						
46						
47						
48						

Printed in England
© Rolls-Royce Motors Limited 1978
T.S.D. 4200

Chapter J Part II

Issue record sheet 1

September 1982

The dates quoted below refer to the issue date of individual pages within this chapter.

Section	J1m	J2m	J3m	J4m	J5m	J6m
Page No.						
1	Oct 79	Jul 79	Jul 79	Sep 82	Jul 79	Jul 79
2	Oct 79	Jul 79		Sep 82	Jul 79	
3	Jul 79	Jul 79		Sep 82		
4	Jul 79					
5	Jul 79					
6	Jul 79					
7	Jul 79					
8	Jul 79					
9	Jul 79					
10						
11						
12						
13						
14						
15						
16						
17						
18						
19						
20						
21						
22						
23						
24						
25						
26						
27						
28						
29						
30						
31						
32						
33						
34						
35						
36						
37						
38						
39						
40						
41						
42						
43						
44						
45						
46						
47						
48						

Printed in England

© Rolls-Royce Motors Limited 1982

T.S.D. 4200

Printed in England
© Rolls-Royce Motors Limited 1978

Section J1

Final drive

Introduction

The final drive unit comprises a centre differential gear case which contains the hypoid crown wheel, pinion gear and differential housing gears; two short drive-shafts transmit the drive to the rear wheels. The ball and trunnion joint on each side of the unit is enclosed by a convoluted neoprene seal to prevent oil leakage and the ingress of dirt and water.

The final drive casing is attached to a crossmember which is mounted to the body by rubber mounts.

Torque reaction of the final drive is controlled by a torque arm bolted to the final drive casing and attached to the rear suspension crossmember through rubber mounts.

The complete final drive unit, crossmember, drive-shafts and torque arm can be removed from beneath the car as a complete assembly.

A fully adjusted final drive assembly is available as a service exchange item. This assembly is supplied without half-shaft assemblies but is fitted with side bearing housings.

When fitting half-shafts to a replacement final drive assembly it is essential that the side bearing housings supplied with the assembly are fitted to the half-shafts. The fitting of any other bearing housings will result in a incorrectly adjusted final drive assembly.

Final drive unit — To remove

1. Position the car on a ramp and securely chock the road wheels.

2. Switch on the ignition. Select the 'N' (neutral) position on the gear range selector; switch off the ignition.

3. Remove the drain and level plugs from the final drive and allow the oil to drain into a container. It is advisable to carry out this operation when the oil is warm e.g. immediately after the car has completed a run.

After draining, clean and fit the drain plug complete with new sealing washer.

4. Remove the rear section of the exhaust system as described in Chapter Q — Section Q1.

5. Disconnect the propeller shaft from the differential flange.

6. Disconnect the half-shaft outer universal joints from the hub yokes by removing the eight clamping setscrews; remove the four clamps. To finally detach the joints ease the half-shaft inwards, ensuring that the universal joint needle roller housings are held in position and retained to the universal joint when removed from the yoke.

Note

To carry out Operations 5 and 6 it may be necessary to jack up and rotate a rear road wheel in order to gain access to the necessary nuts and bolts.

7. Support the half-shafts to avoid strain being imposed on the ball and trunnion joint seals by tying the shafts with cord to the final drive crossmember.

8. Support the final drive assembly with a hydraulic jack placed beneath the centre casing.

9. Detach the torque arm from its front mount on the rear suspension sub-frame by removing the two bolts, nuts and special washer (see Fig. J12).

10. Disconnect the earthing lead from the final drive crossmember.

11. Remove the nuts and washers from the centre bolts of the final drive crossmember mounts. It may be necessary to lift the luggage compartment floor carpet and hold the bolt heads whilst removing the nuts.

12. Lower the final drive and crossmember assembly together with the torque arm from the car. Collect the large washers from the top of each crossmember mount.

13. With the assembly suitably supported on a work bench, remove the cord used to support the half-shafts to the crossmember.

14. Detach the crossmember by removing the twelve setscrews from the rear face of the final drive, noting the positions of the eight special interlocking washers. The two centre setscrews on each side of the centre casing rear face may be left in position, to retain the final drive rear cover (see Fig. J11).

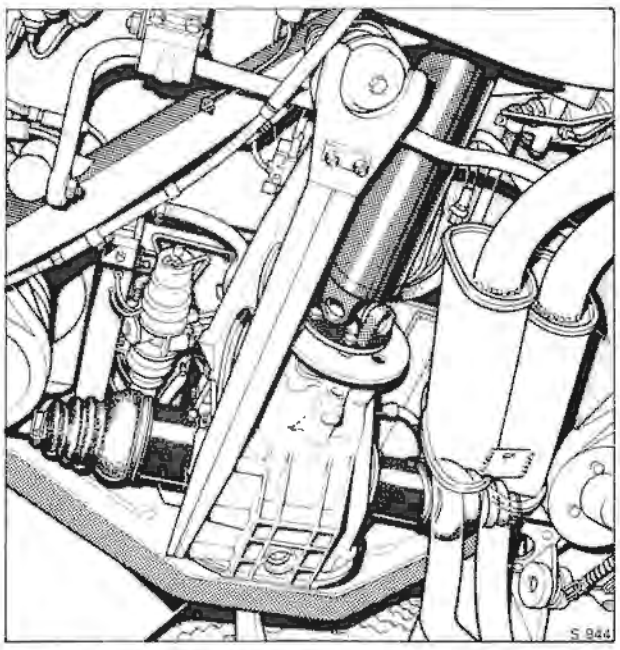

Fig. J1 Final drive in position

May 1978
T.S.D. 4200

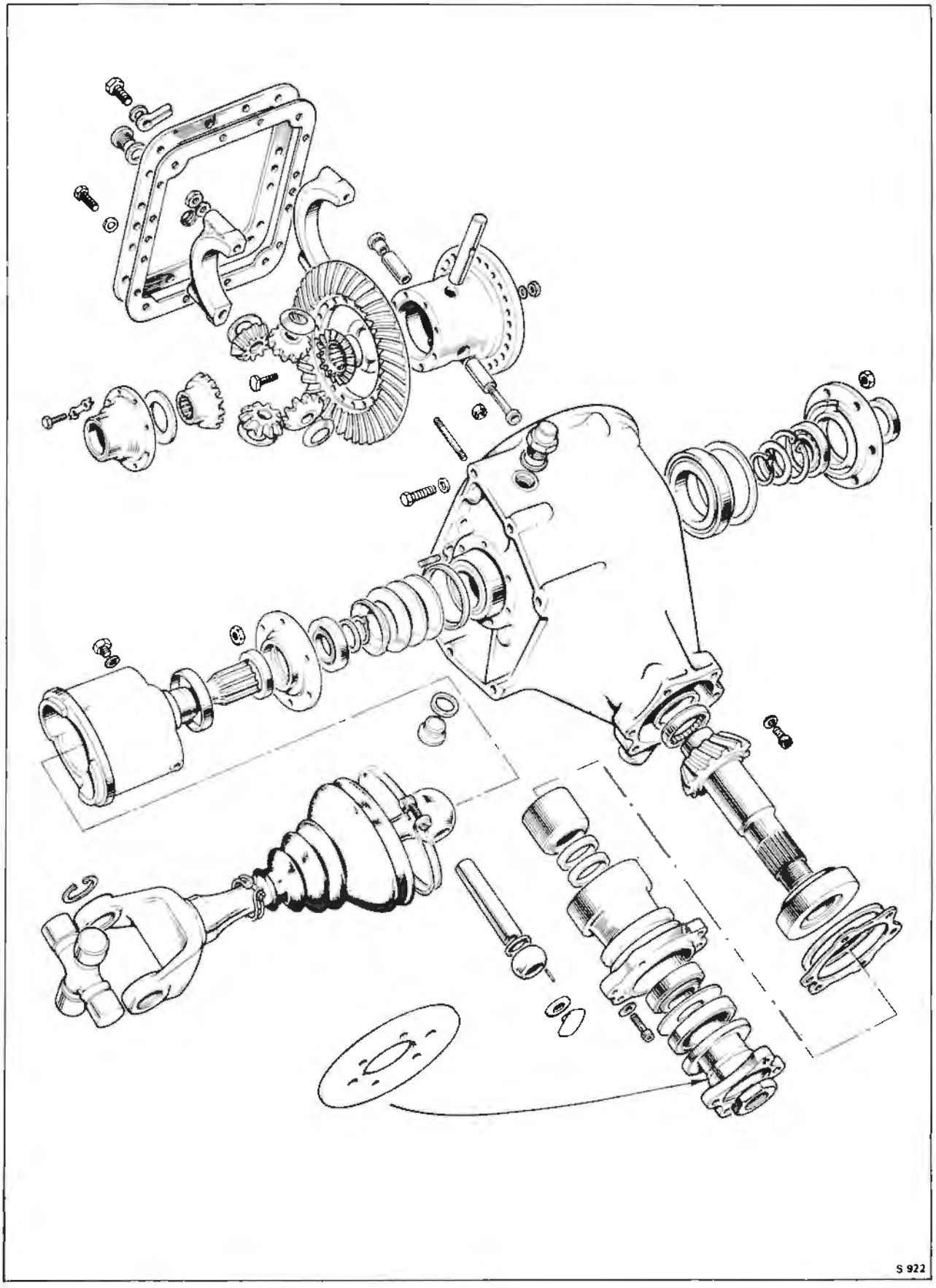

Fig. J2 Final drive

Printed in England
© Rolls-Royce Motors Limited 1978

Final drive unit — To dismantle (see Fig. J2)

1. Remove the six retaining nuts from the right-hand half-shaft bearing housing and withdraw the shaft assembly; also the distance piece, three belleville washers and the adjusting washer from behind the housing (see Fig. J15).
2. Remove the six retaining nuts from the left-hand half-shaft bearing housing and withdraw the shaft and the large adjusting washer fitted between the housing and the large crown wheel bearing.
3. Unscrew the four retaining setscrews and remove the differential casing rear cover.
4. Remove the nuts and washers from the bearing caps on each side of the crown wheel and differential assembly (see Fig. J3).

Correlate the caps and casing to ensure that the caps can be refitted into their original positions and then withdraw the caps.

Note

The bearing cap and casing are machined as pairs, therefore, although the caps cannot be fitted to the incorrect side, they must not be fitted in their reversed positions.

5. The crown wheel and differential assembly can now be raised slightly, moved away from the pinion and carefully removed from the casing.

Note

Care should be taken during Operations 4 and 5 to ensure that the two large taper roller bearing tracks do not fall off, as this could cause damage to the rollers or tracks.

6. Remove the four setscrews which secure the pinion housing to the front flange of the casing and insert extractor screws into the two tapped holes in the pinion housing flange.
7. Place the casing in an oven having a temperature of 110°C. (230°F.) for approximately fifteen minutes.
8. Remove the casing from the oven and extract the pinion housing using the two extractor screws; care should be taken to turn the screws evenly and together.
9. To remove the pinion nose bearing, remove the two socket headed screws, retaining nuts and washers and withdraw the bearing.

Crown wheel and differential assembly — To dismantle

When dismantling the crown wheel and differential assembly care should be taken to ensure that all thrust washers and bearing tracks are retained with their appropriate parts to ensure that they are assembled in their original positions.

1. Remove the two bearing outer tracks.
2. Remove the nuts, bolts and washers securing the crown wheel to the differential housing; remove the crown wheel.
3. Unlock and remove the eight setscrews securing the differential housing and cap, remove the cap, splined pinion gear and adjusting washer.
4. Remove the locking nut and long setscrew from the centre of the split trunnion pin; remove the trunnion pins, bevel gears and dished thrust washers.
5. Remove the splined pinion gear and thrust washer from the opposite end of the pinion housing.

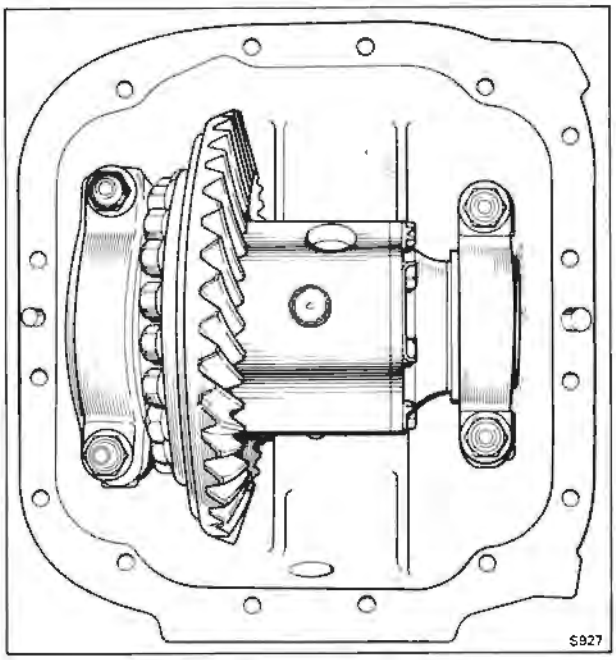

Fig. J3 Differential housing and crown wheel in position

6. Wash all parts thoroughly and dry with compressed air. If it is necessary to renew the large taper roller bearings, press them off the differential housing and end cap.
7. All components should be thoroughly inspected for wear and damage and any defective items renewed.

Thrust washers should be flat and parallel, excluding the four dished thrust washers fitted behind the bevel gears. Ensure that gears and all bearing surfaces are free from damage, pitting, score marks, burrs and excessive wear.

Crown wheel and differential assembly — To assemble

1. If new taper roller bearings are to be fitted they must be pressed squarely onto the diameters situated on the end of the differential housing and end cap. Note that the larger of the two bearings is fitted to the housing and that both bearings should be fully seated against their abutment faces.
2. If the adjusting washer positions are not known or new pieces are being fitted, the procedure for assembling the differential housing described in Operations 3 to 6 inclusive should be carried out.
3. Fit the splined bevel pinion into the end of the differential housing without an adjusting washer behind the head.
4. Fit the trunnion pins, dished washers and bevel gears. The long bolt and nut which connects the split trunnion pins should be torque tightened to between 1,6 kgf.m. and 1,9 kgf.m. (12 lbf.ft. and 14 lbf.ft.).
5. Push the splined pinion gear into mesh with the bevel gears as far as possible and measure the distance from the end of the differential housing to the end face of the pinion gear (see Fig. J4).

May 1978
T.S.D. 4200

Pull the pinion gear back out of mesh as far as possible and again measure the distance from the end of the housing to the end of the gear.

The difference between these two measurements will give the nominal thickness of adjusting washer required behind the gear head.

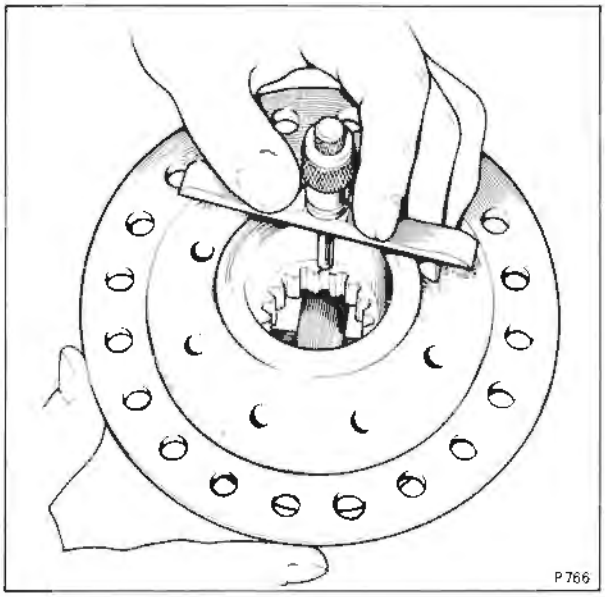

Fig. J4 Splined bevel pinion measurement

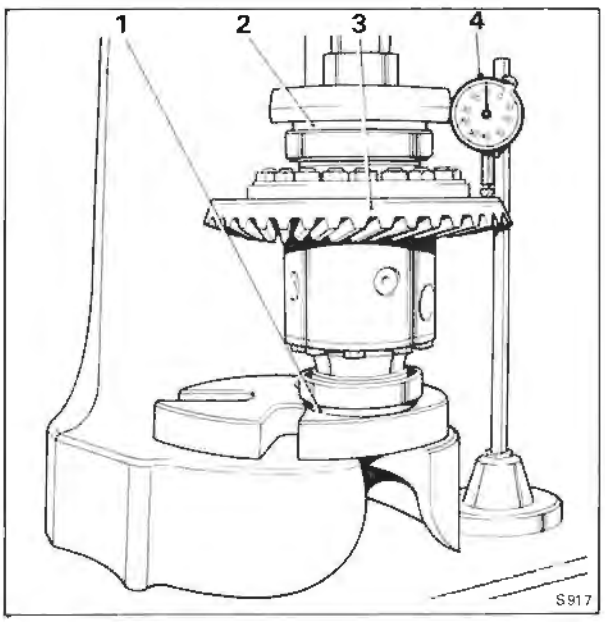

Fig. J5 Checking the crown wheel

1 Adjusting washer
2 Adjusting washer
3 Crown wheel and differential assembly
4 Dial test indicator

6. Dismantle the gears, place the correct adjusting washer behind the bevel pinion and assemble the gears.

Adjusting washers are available in a range of between 2,13 mm. and 2,94 mm. (0.084 in. and 0.116 in.) in 0,05 mm. (0.002 in.) increments. The washers must be fitted with the chamfer and oil grooves against the back face of the gear.

7. Rotate the gears to ensure that they are perfectly free but with a maximum backlash of 0,076 mm. (0.003 in.) and no end-float on the bevel gear; adjusting the washer as necessary.

8. Fit the housing end cap and the other splined bevel pinions and repeat Operations 3 to 7 inclusive to determine the adjusting washer required.

Note

When the unit is assembled correctly the gear should turn freely with a maximum of 0,076 mm. (0.003 in.) backlash between the gears and no end-float in the splined bevel pinions.

9. When the differential gears are correctly set, check that the torque tightness of the split trunnion centre bolt is between 1,6 kgf.m and 1,9 kgf.m. (12 lbf.ft. and 14 lbf.ft.) then lock the nut in position.

10. Torque tighten the end cover setscrews in accordance with the figures quoted in Chapter P and lock the tabwashers.

11. Fit the crown wheel to the differential housing and torque tighten the nuts to the figures quoted in Chapter P.

12. Check the crown wheel for axial run-out.

Any convenient method may be used to check this e.g. on a mandrel between the centres. One method which may be used is described in Operations 13 and 14.

13. Place the roller bearing outer tracks in position and stand the assembly on one end. Position the assembly in a press with one adjusting washer fitted to each bearing (see Fig. J5).

14. Apply light pressure and using a dial indicator, check the run-out of the crown wheel; the run-out should not exceed 0,05 mm. (0.002 in.).

If the run-out exceeds this figure vary the crown wheel position relative to the differential housing until the run-out is within the 0,05 mm. (0.002 in.) limit.

Pinion housing — To dismantle

1. Remove and discard the 'O' ring fitted to the pinion housing.

2. Unscrew and remove the nut securing the pinion flange and damper; remove the flange using the special hydraulic ram (RH 8017) and special extractor beam (RH 8470).

3. Remove the pinion oil seal and the oil flinger fitted behind it.

4. Position the housing in a press with the pinion gear downwards. With the housing lower end firmly supported, carefully press the pinion out of the housing.

5. Collect the spacer and adjusting washers from the pinion shank and the taper roller bearing from the housing.

6. If new taper roller bearings are to be fitted, the outer tracks must be removed from the housing using a soft drift and a hammer, taking care to avoid damaging the bearing locating bores.

7. The large taper roller bearing should be removed from beneath the pinion head using a press and the special extraction tool (RH 8016).
8. Wash all parts thoroughly in paraffin and dry with compressed air.
9. Inspect parts for serviceability; any showing damage, pitting or excessive wear, should be renewed.

Pinion housing – To assemble (see Fig. J6)

1. Lightly lubricate all components paying particular attention to the roller bearing faces.
2. If new bearings are to be fitted press the outer tracks into the pinion housing and the large roller bearing onto the pinion, ensuring that the bearings are square and seated on their abutment faces.
3. Enter the pinion into the housing then fit the spacer and two adjusting washers onto the pinion shank.

The two washers determine the pre-load on the pinion bearings.

It is important that the washers are free from defects and are flat and parallel to within 0,012 mm. (0.0005 in.).

If the pinion bearings have not been renewed, the original washers may be used. If new bearings have been fitted, washers whose combined thickness amounts to between 6,85 mm. and 8,89 mm. (0.270 in. and 0.280 in.) should give the best initial setting.

4. Support the pinion and housing. Press the upper bearing onto the pinion shank until it abuts the adjusting washers.
5. Fit the oil flinger and a new oil seal to the housing. Ensure that the front face of the seal is 3,2 mm. (0.125 in.) below the face of the housing and the seal lip is pointing inwards. The outside diameter of the seal should be brushed with 'Wellseal' sealant before fitting.
6. Smear the inner face of the seal with palm oil, fit the transmission damper to the pinion flange. Enter the flange onto the pinion shank taking care not to damage the oil seal or pinion threads.
7. Press the coupling flange onto the pinion shank using assembly tool (RH 8457) and fit the nut.
8. Tighten the nut to a torque figure of between 3,8 kgf.m and 4,46 kgf.m. (275 lbf.ft. and 300 lbf.ft.). Rotate the pinion housing during tightening to check the free movement of the bearings.
9. Rotate the pinion in the housing several times in both directions then check the pre-load.

The pre-load on the pinion bearings when the housing is out of the final drive casing should be between 1,6 kgf.m. and 2,3 kgf.m (12 lbf.in. and 17 lbf.in.). This can be checked using a spring balance pulling on a bolt inserted into one of the holes in the pinion flange.

Note

The holes in the pinion flange are 4,762 cm. (1.875 in.) away from the centre of the pinion and therefore if this method is used the spring balance reading should be between 2,9 kg. and 4,08 kg. (6.4 lb. and 9.0 lb.). Ensure that the line of pull on the spring balance is truly tangential.

The spring balance reading obtained to initially rotate the pinion will be high. It is the lower steady reading when the pinion is rotating which indicates the pre-load.

10. If the pre-load is not correct the pinion must be extracted from the housing and the adjusting washers changed as necessary to obtain the correct reading.

Adjusting washers are available in a range of between 2,66 mm. and 2,79 mm. (0.105 in. and 0.110 in.) in 0,127 mm. (0.005 in.) increments.

Reducing the combined thickness of the washers will increase the pre-load and increasing the thickness will reduce it. Very small changes to the thickness of the washers has a marked effect on the pre-load figure.

Final drive unit – To assemble

To assemble the final drive unit reverse the procedure given for dismantling ensuring that the crown wheel and pinion are in their correct relative positions and that the amount of backlash between the two gears is correct.

All parts must be cleaned thoroughly prior to assembly and all bearings lubricated.

1. Before assembling the final drive unit the stiffening bar (RH 8032) should be fitted to the final drive casing.
2. Partially screw four 3/8 in. U.N.F. studs into the threaded holes in the front of the final drive casing. It is sufficient to fit these by hand as they serve only as location pegs for the pinion housing.
3. If the pinion nose bearing has been removed from the casing, fit the bearing, snap ring and the two socket headed retaining screws, nuts and washers. Torque tighten the screws (see Chapter P) and centre punch the nuts in three places to lock them into position.

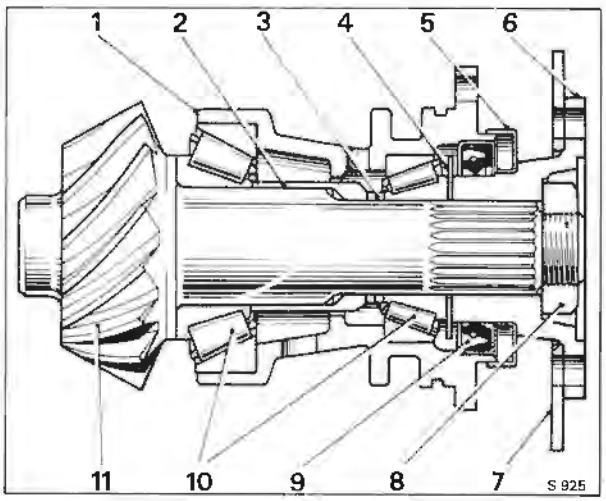

Fig. J6 Pinion assembly

1	Pinion housing
2	Spacer
3	Pre-load adjusting washers
4	Oil flinger
5	Shield
6	Pinion flange
7	Damper
8	Pinion flange nut
9	Oil seal
10	Taper roller bearings
11	Pinion

© Rolls-Royce Motors Limited 1978

4. Note the dimension stamped on the final drive casing (see Fig. J7) then place the casing in an oven having a temperature of 110°C. (230°F.) for approximately thirty minutes.
5. Carefully measure from the back face of the pinion housing front flange to the face of the pinion gear, adjacent to the nose bearing diameter (see Fig. J8 dimension X).
6. Add this figure to the dimension etched on the rear face of the pinion (dimension Y).

The dimension 'A' stamped on the final drive casing which was noted previously must now be subtracted from the total of dimensions 'X' and 'Y'.

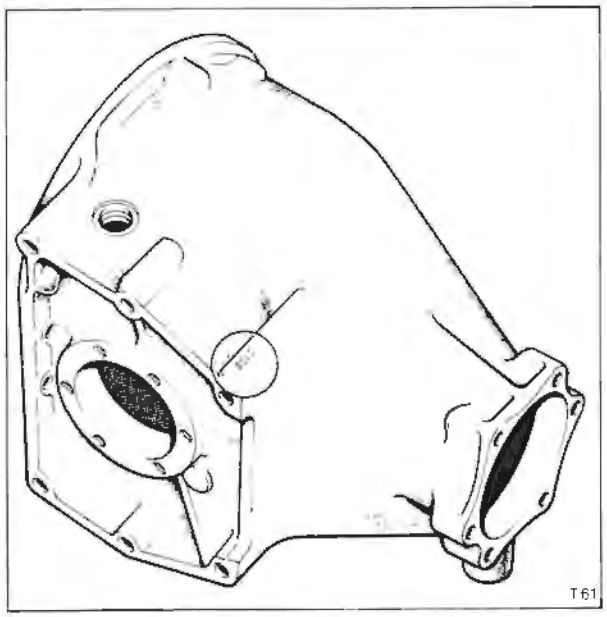

Fig. J7 Stamped dimension on final drive casing

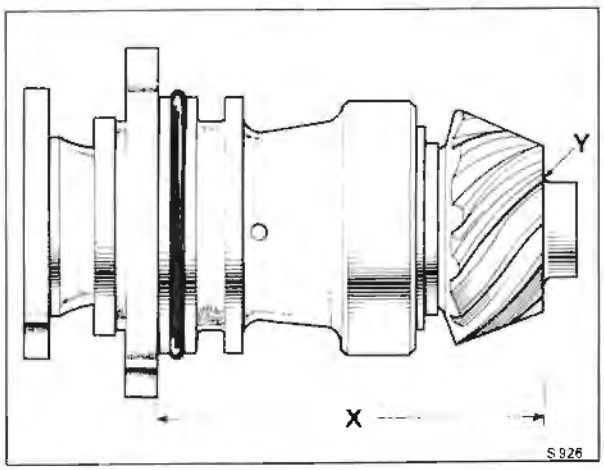

Fig. J8 Pinion housing measurement
X Dimension between housing and pinion gear
Y Dimension etched on pinion gear face

The final dimension gives the thickness of the split adjusting washer which must be used between the pinion housing flange and the casing, to place the pinion in the correct position.

Thickness of washer = X + Y – A

The above measurements must be taken carefully and accurately.

Split adjusting washers are available in the following sizes 3,048 mm. (0.120 in.), 3,175 mm. (0.125 in.), 3,302 mm. (0.130 in.), 3,479 mm. (0.137 in.) and 3,784 mm. (0.147 in.).
7. Remove the casing from the oven and fit the split adjusting washers over the studs.
8. Fit a new 'O' ring to the pinion housing and insert the housing into the casing as far as possible.
Note
The pinion housing has one off-set hole and can therefore only be fitted in one position. It is advisable to establish this position before entering the housing into the casing.
9. Remove the locating studs; fit the four Allen cap setscrews and tighten them progressively and evenly to a torque figure of 4,0 kgf.m. to 4,4 kgf.m. (29 lbf.ft. to 32 lbf.ft.).
10. Examine the crown wheel and note the backlash figure etched on the back face.
11. Carefully place the crown wheel and the differential assembly in position; fit the bearing caps but do not tighten the nuts.
12. If the two final drive side housings are still connected to the half-shafts, remove the retaining circlips and remove the housings from the shafts.
13. Fit the adjusting washer with the chamfered face outward, three belleville washers with the convex side outward, distance piece and housing on the right-hand side of the final drive casing and progressively tighten the housing securing nuts (see Fig. J15).
14. Fit the two adjusting washers behind the crown wheel bearing and fit the left-hand side housing. Progressively tighten the housing nuts whilst rocking the crown wheel back and forth to ensure that there is backlash between the gears.
15. Mount a dial test indicator on the final drive casing with the indicator pad on the flank of a crown wheel tooth.
16. Zero the indicator and 'rock' the crown wheel back and forth noting the backlash.
17. The backlash should be checked at four positions around the crown wheel and an average reading taken. This figure should be marginally less than the backlash figure etched on the crown wheel.

If it does not conform, the thickness of the washer behind the bearing must be varied to obtain the correct reading.

Washers are available in a range of between 5,664 mm. and 6,604 mm. (0.223 in. and 0.260 in.) in increments of 0,101 mm. (0.004 in.).
18. In order to obtain the required result equal amounts may be ground from each side of the washer, taking care to ensure that, after grinding, the washer is still flat and parallel to within 0,025 mm.(0.001 in.).
19. When the backlash is correct, remove the side housing from the centre casing; slide the housing onto the half-shaft assembly and fit the circlip.

20. Fit the complete assembly to the final drive casing after applying a light coating of SQ 32M jointing compound to the joint faces of the casing and housing.
21. Remove the right-hand housing, distance piece, belleville washers and adjusting washers.
22. Accurately measure the distance from the casing flange to the taper roller bearing outer track (see Fig. J9)
23. Place the housing, distance piece and belleville washers in the checking jig (RH 7861) and tighten the jig end pieces until the belleville washers are flat (see Fig. J10).
24. Using feeler gauges, measure the distance between the housing flange face and the top of the two pins on the gauge. The result added to the nominal pin height marked on the gauge gives the distance from the side housing to the belleville washers.

Subtract this dimension from the dimension previously taken between the casing flange and the taper bearing; the result gives the thickness of the adjusting washer which must be fitted between the belleville washers and the taper bearing, to give the correct pre-load.

Adjustment washers are available in a range of between 5,08 mm. and 6,60 mm. (0.200 in. and 0.260 in.) in increments of 0,254 mm. (0.010 in.). Washers may be lightly ground to obtain the correct dimensions but if this is done, equal amounts must be removed from each side and the washer must be kept flat and parallel.
25. Fit the right-hand side housing to the half-shaft.
26. Fit the correct washer with the chamfered side outwards, the three belleville washers, convex side outwards and the distance piece. Fit the housing and half-shaft assembly after applying a light coating of SQ 32M jointing compound to the flange faces.

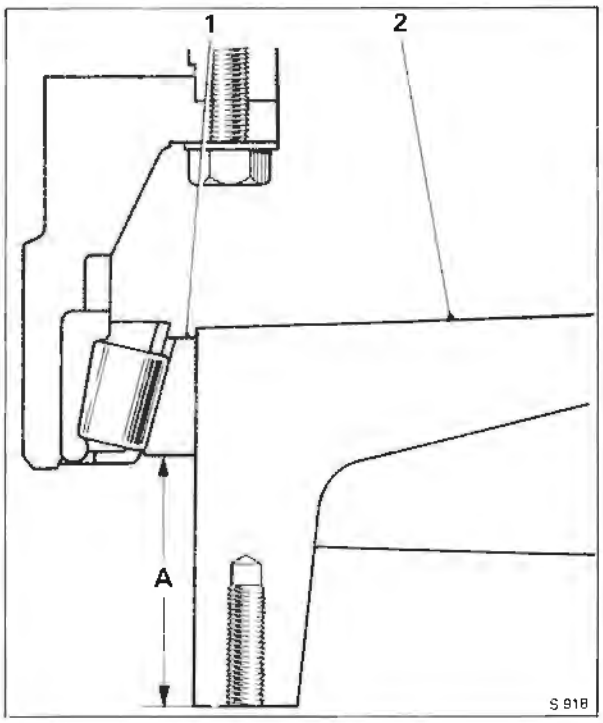

Fig. J9 Casing flange to bearing measurement
A Measurement — flange to bearing
1 Bearing outer track
2 Final drive casing flange

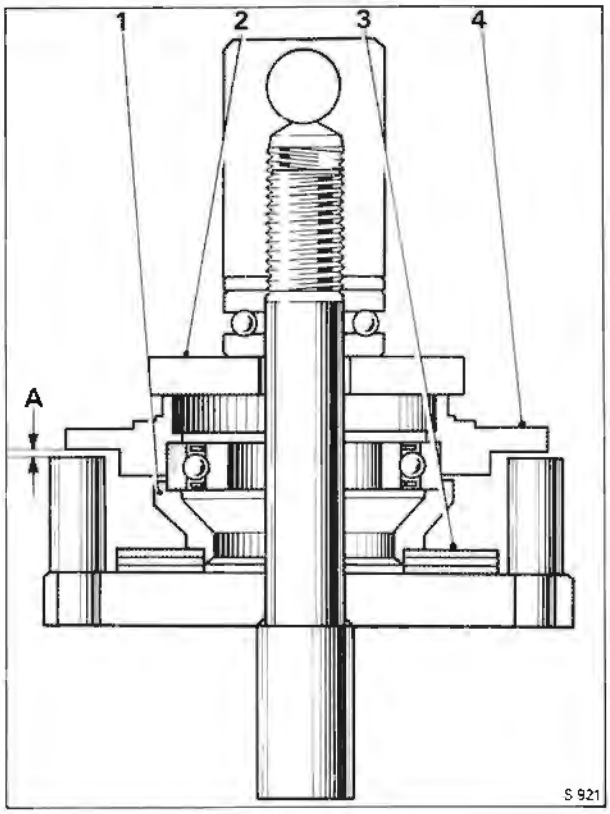

Fig. J10 Belleville washer setting
A Measured gap
1 Distance piece
2 Tool (RH 7861)
3 Belleville washers
4 Final drive side housing

27. Tighten the housing securing nuts progressively and evenly and finally torque tighten them to between 1,1 kgf.m. and 1,4 kgf.m. (8 lbf.ft. and 10 lbf.ft.).
28. Torque tighten the nuts securing the two large bearing caps in accordance to the figures quoted in Chapter P.
29. Release the six side cover retaining nuts approximately 3,17 mm. (0.125 in.) to release the casing load.
30. Remove the stiffening bar (RH 8032); fit the gasket and end cover. Fit and tighten the four setscrews adjacent to the two dowels.
31. Progressively tighten the six side cover retaining nuts previously released in Operation 29.
32. Rotate the pinion coupling flange to ensure that there are no tight spots or roughness of operation.

Final drive unit -- To fit

To fit the final drive unit reverse the procedure given for removal noting the following points.
1. The rear crossmember should be fitted with the eight interlocking washers fitted correctly on the eight corner setscrews (see Fig. J11).
2. Support the drive-shafts by securing them to the final drive crossmember with cords to retain the detroit joints in position.

Printed in England
© Rolls-Royce Motors Limited 1978
May 1978
T.S.D. 4200

3. When fitting the universal joints to the yokes ensure that the needle roller bearing caps are located correctly into the hub yokes before fitting the retaining caps and setscrews.
4. The propeller shaft and pinion flange faces must be clean and free from damage before securing together.
5. When fitting the exhaust system reference should be made to Chapter Q Exhaust systems.
6. Torque tighten all bolts and nuts in accordance with the figures quoted in Chapter P.
7. After fitting the final drive unit ensure that the drain plug is tightened, remove the filler plug from the rear cover and fill the axle with one of the recommended lubricants (see Chapter D), up to the level of the plug (approximately 2,55 litres (4½ Imperial pints, 5½ U.S. pints).
8. Fit the filler plug together with a new joint washer.

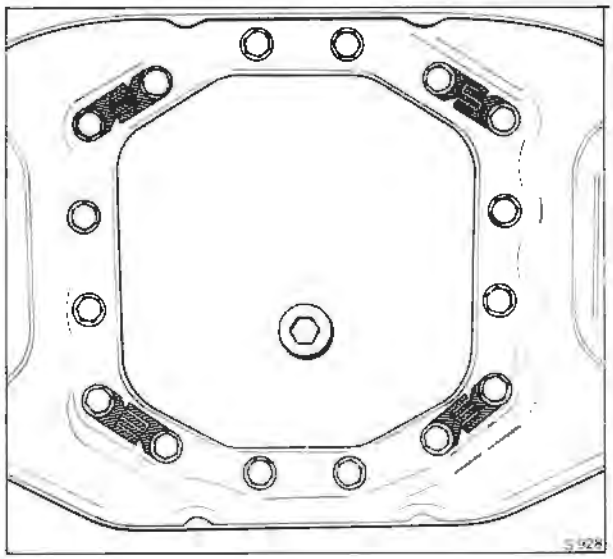

Fig. J11 Locking washers — final drive end cover

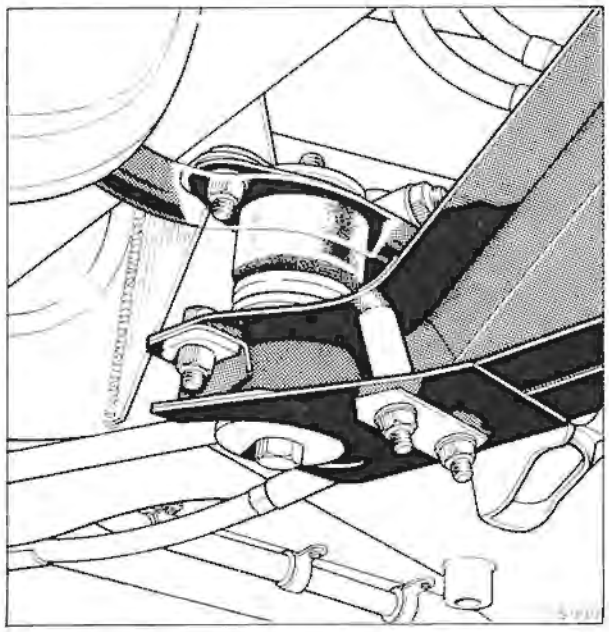

Fig. J12 Torque arm front mount

Pinion flange oil seal — To renew
The pinion flange oil seal may be renewed with the final drive unit in position.
1. Place the car on a ramp and securely chock the road wheels.
2. Remove the bolts and nuts securing the propeller shaft to the pinion flange.
3. Remove the bolts and nuts securing the propeller shaft front flange to the transmission output flange.

Ease the propeller shaft forward and downward sufficiently for the rear flange to be clear of the final drive pinion flange. It is not necessary to remove the propeller shaft completely.
4. Scribe correlation marks across the pinion face, coupling flange and transmission damper. Remove the pinion nut.
5. Using the hydraulic ram (RH 8017) and special extractor (RH 8470) remove the pinion flange.
6. Using a lever or simple extractor remove the oil seal from the pinion housing.
7. Fit a new oil seal, ensuring that it is fitted squarely, with the lip pointing inward and that the front face of the seal is 3,2 mm. (0.125 in.) below the front face of the housing.
8. Clean and fit the pinion flange and damper ensuring that the correlation lines are in line. Failure to do this will result in pinion imbalance. Fit and torque tighten the nut to the figure quoted in Chapter P.
9. Connect both ends of the propeller shaft and torque tighten the nuts to the figure quoted in Chapter P.

Torque arm — To remove
Removal of the torque arm can be carried out without disturbing the final drive unit.
1. Place the car on a ramp and securely chock the road wheels.
2. Support the final drive unit by placing a jack under the centre casing.
3. Remove the two nuts, bolts and heavy washers securing the torque arm to the mount on the rear suspension crossmember.
4. Remove the six setscrews securing the torque arm to the final drive casing; remove the torque arm.
5. Inspect the torque arm mount on the rear suspension crossmember for any signs of failure or softening of the rubber and renew if necessary.
6. Clean and visually inspect the torque arm for serviceability.

Torque arm — To fit
Fit the torque arm by reversing the procedure given for removal noting the following points.
1. All nuts and bolts should be torque tightened in accordance with the figures quoted in Chapter P.
2. It is essential that the heavy duty washers and strengthening pieces are fitted to the front mount (see Fig. J12).

Printed in England
© Rolls-Royce Motors Limited 1978

Section J2

Half-shafts

Half shaft — To remove

The half shaft can be removed with the final drive unit in position. Half-shaft assemblies complete with ball and trunnion joint, seal and universal joint, are available as Service Exchange items.

If a half-shaft is to be removed proceed as follows.

1. Drive the car onto a ramp and securely chock the road wheels.
2. On the respective side remove the wheel disc and loosen but do not remove the wheel nuts.
3. Using a hydraulic jack with an extension piece and hardwood block positioned under the final drive differential casing, raise the rear of the car until the road wheels are clear of the ramp.
4. Position blocks and sill beams beneath the body sill. Place screw jacks beneath the trailing arms. Lower the hydraulic jack from beneath the final drive allowing the car to rest on the sill beams and supports.
5. Remove the road wheel.
6. Remove the four setscrews and the two bearing caps from the outer universal joint (see Fig. J13). Ease the half-shaft inwards to disengage the universal joint from the hub yoke; care should be taken during removal to retain the needle roller bearing caps in position on the universal joint. Support the half-shaft to avoid excessive strain on the ball and trunnion joint seal; a convenient method of doing this is to support the half-shaft on a piece of cord looped around the final drive crossmember.
7. Remove the six nuts securing the bearing housing to the side of the final drive casing; tap the housing with a nylon headed mallet to break the joint.
8. With the trailing arm in its lowest position, lift the half-shaft outer end upwards; withdraw the housing and shaft assembly from the final drive casing.

Note

When removing a right-hand half-shaft assembly care must be taken when withdrawing the housing. A thin rod or screwdriver should be inserted behind the housing to prevent the possibility of the belleville washers falling down into the final drive casing (see Fig. J15).

When handling the half-shaft assembly, both ends should be supported. Do not carry the shaft holding one end only, place the shaft in an unsupported position or allow the trunnion body to hang downwards otherwise oil may be lost through the small breather hole in the centre of the splined shaft.

9. After removal of the half-shaft assembly the final drive casing must be blanked off to prevent the ingress of foreign matter.

Half-shaft — To dismantle

1. Remove the circlip and washer retaining the ball and trunnion joint body to the side bearing housing. Remove the housing from the splined shaft.
2. Remove the drain plug from the joint body and drain the oil from the housing (each trunnion joint holds approximately 150 ml. of lubricant).
3. Release the clips securing the convoluted seal to the joint body and half-shaft.
4. Position the shaft with the drain plug hole horizontal; ease the seal over the edge of the joint body and carefully withdraw the ball and trunnion assembly, taking care not to dislodge the button assemblies. Push the seal down the shaft and clear of the buttons.
5. Remove the trunnion buttons, adjusting washers, bearing outer races and needle rollers from the trunnion pin (see Fig. J14). Keep each assembly separate and note from which side of the pin they have been removed.
6. Whilst dismantled the trunnion bearing assemblies should be lubricated and wrapped in greaseproof paper for protection.
7. If the outer universal joint is to be removed, clean any paint or foreign matter from the yoke eyes and remove the circlips.
8. Hold the shaft horizontal and using a nylon mallet, shock drive the needle bearing races from the yoke eyes; care must be taken to avoid damage to the lip seals.
9. Thoroughly clean and inspect all items for wear and damage. Also inspect the convoluted trunnion joint seal for serviceability and if necessary renew.

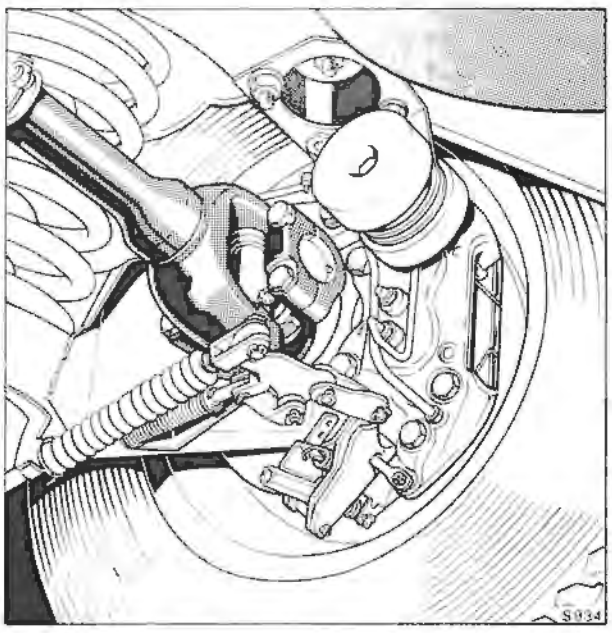

Fig. J13 Half-shaft outer universal joint

May 1978
T.S.D. 4200

Ball and trunnion joint seal — To renew

When renewing a ball and trunnion joint seal, the half-shaft and trunnion assembly must be removed from the car.

1. Remove the half-shaft and trunnion joint assembly and carry out Operations 2 to 6 inclusive of 'Half-shaft — To dismantle'.
2. The trunnion pin must be pressed out of the half-shaft using equipment capable of exerting a pressure of up to 2362, kg/sq.m. (15 ton/sq.in.).

Heat must not be used for this operation

3. Remove the pin and joint seal.
4. Fit a new seal and press the trunnion pin into position.

The trunnion pin must be pressed in squarely and the length of pin which protrudes from each side must be equal to within 0,152 mm. (0.006 in.); check the pins for scoring or damage after fitting.

If the original pin and the bore are in good condition and the minimum pressing load of 394, kg/sq.m. (2.5 ton/sq.in.) can be achieved, the original pin may be used again; if not it is recommended that a new trunnion pin is fitted.

5. When the trunnion pin and new seal have been fitted the half-shaft should be assembled as instructed under 'Half-shaft — To assemble'.

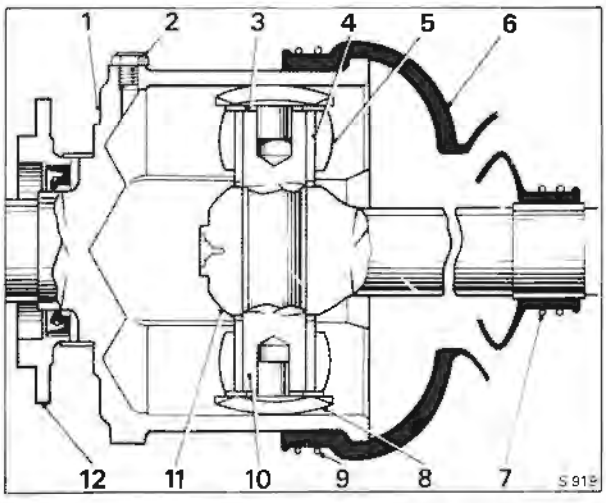

Fig. J14 Half-shaft ball and trunnion joint

1 Ball and trunnion joint body
2 Drain plug
3 Adjusting washer
4 Needle rollers
5 Needle roller race
6 Joint seal
7 Seal clip
8 Trunnion buttons
9 Seal clip
10 Trunnion pin
11 Half-shaft knuckle end
12 Final drive side housing

Half-shaft — To assemble

The half-shaft should be assembled by reversing the procedure given for dismantling, noting the following points.

1. Thoroughly clean all components before assembly.
2. Assemble the universal joint into the half-shaft end yoke (see Universal joint — To fit).
3. Using a micrometer measure the length of the trunnion pin on each side of the half-shaft knuckle and note any difference in length.
4. Fit the trunnion buttons onto the trunnion pin, but at this stage do not fit the adjusting washers and trunnion bearings.

Insert the trunnion into the joint body and using feeler gauges measure the total gap between one button and the body wall. This measurement gives the total amount of adjustment required. Any difference of pin lengths noted earlier should be taken into account when equally dividing the total adjustment required between the trunnion adjusting washers. For example, if pin measurements differ by 0,101 mm. (0.004 in.), half this amount should be added to the thickness of the adjusting washer fitted to the shorter side of the trunnion pin and subtracted from the washer thickness fitted to the long side. This will give a difference of 0,101 cm. (0.004 in.) in washer thicknesses and centralise the half-shaft in the body. Shim washers are available for this purpose in a range from 0,304 mm. to 0,584 mm. (0.012 in. to 0.023 in.) in 0,025 mm. (0.001 in.) increments.

5. Fit the inner washers and the needle roller assemblies to each side of the trunnion pin then, fit the trunnion buttons together with their correctly selected adjusting washers to the pin ends (see Fig. J14).
6. Fit the correctly adjusted trunnion assembly into the joint body. Ease the joint seal over the body and tighten the two wire clips ensuring that the small end of the seal locates on the machined diameter of the shaft.
7. Fill the joint body with 150 ml. of the recommended lubricant (see Chapter D Lubricants) and fit the filler plug.
8. Fit the half-shaft to the car as instructed under 'Half-shaft — To fit'.

Half-shaft — To fit

Fit the half-shaft by reversing the procedure given for removal noting the following points.

1. If a service exchange shaft is being fitted, it will be supplied suitably blanked and protected.

Remove the protective covering from the joint body splines. Also remove the cover on the breather hole in the end of the splined shaft. All traces of protective material must be removed.

2. Remove the circlip and washer from behind the bearing housing on the old shaft and fit the housing, washer and circlip to the new shaft.

It is essential that the side bearing housings removed from the final drive assembly are fitted to the half-shafts, as the fitting of any other housing will result in an incorrectly adjusted final drive assembly.

3. Remove the drain plug from the trunnion joint body and inject 150 ml. of recommended lubricant (see Chapter D Lubricants) into the joint body and fit the plug.

4. Fit the half-shaft to the car. When fitting a right-hand half-shaft, care must be taken to ensure that the belleville washers and distance piece are retained in position. Also ensure that the belleville washers are fitted with the concave side of the washers facing the crown wheel assembly (see Fig. J15).
5. When fitting the half-shaft assembly to the final drive casing it should be noted that the bearing housing has one off-set hole and can only be fitted in one position. Therefore, the holes should be aligned as the shaft is inserted into the final drive unit.
6. Ensure that the needle bearing caps are located correctly in the hub yoke and caps. Fit and torque tighten the four setscrews (see Chapter P).
7. Fit the road wheel and nuts, remove the sill beams and blocks from beneath the car, tighten the wheel nuts and fit the disc.
8. All nuts and setscrews should be torque tightened in accordance with the figures quoted in Chapter P.
9. When the half-shaft has been fitted to the car and with the car in its normal standing height position, inspect the seal to ensure that the seal convolutions are not 'crimped' or strained. If they are the position of the seal should be adjusted on the shaft.

Universal joint — To remove
1. Remove the half-shaft as described under 'Half-shaft — To remove'.
2. Remove any paint or foreign matter from around the circlips in the universal joint yoke eyes and remove the circlips
Note
Due to circlips of different thickness having been fitted, care should be taken to ensure that the circlips are fitted to their original locations. If new circlips are fitted they should be of the same thickness as those they replace.
3. Hold the shaft with both ends supported to avoid excessive strain being put on the convoluted seal. Using a nylon mallet shock drive the races from the yoke eyes.

Universal joint — To fit
1. Ensure that the bores in the yokes are clean and in good condition; lightly grease the needle rollers and locate them in their housings. Each bearing housing is fitted with 38 needle roller bearings.
2. Fit the cross-piece, minus the needle roller and housing assemblies, into the yoke eyes. Hold the cross-piece central and press the bearing housing assemblies into the yoke bores sufficiently to enable the circlips to be fitted. Care should be taken not to damage the joint seals during this operation.
3. Fit the circlips and check the free movement of the universal joint.
4. Grease the universal joint at the nipple provided.

Output shaft oil seal — To renew
The oil seals on the ball and trunnion joint shaft are located in the housings, on each side of the final drive unit and can be renewed with the final drive in position.
1. Remove the half-shaft assembly as described under 'Half-shaft — To remove'.

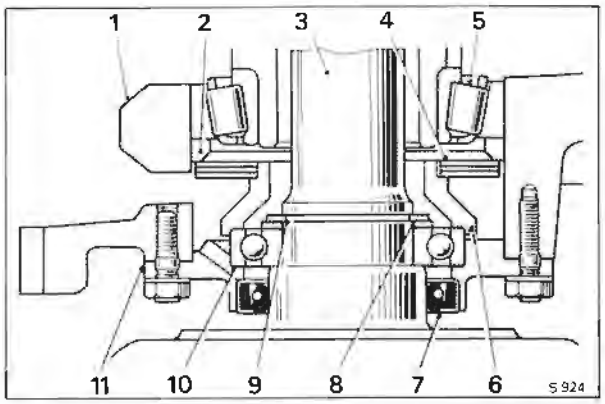

Fig. J15 Final drive side housing
1 Differential housing bearing cap
2 Adjusting washer
3 Ball and trunnion joint splined shaft
4 Belleville washers
5 Taper roller bearing
6 Distance piece
7 Ball and trunnion joint shaft oil seal
8 Retaining washer
9 Retaining circlip
10 Ball and trunnion joint shaft bearing
11 Final drive side housing

2. Remove the circlip and washer located on the ball and trunnion joint shaft behind the bearing housing and remove the housing from the shaft.
3. Remove the seal from the housing.
4. Fit a new seal, ensuring that it is fitted squarely in its locating bore and with the seal lip pointing inwards towards the bearing.
5. Fit the housing onto the shaft, place the washer in position behind the bearing and fit the circlip ensuring it is correctly located in the groove.
6. Fit the half-shaft as described under 'Half-shaft — To fit'.

Output shaft bearing — To renew
1. Remove the half-shaft assembly as described under 'Half-shaft — To remove'.
2. Remove the circlip and washer from the ball and trunnion joint shaft and remove the housing from the shaft.
3. Left-hand housings have a circlip fitted to retain the bearing. Remove this circlip.
4. Remove the bearing from the housing using a mandrel or drift, taking care not to damage the oil seal.
5. Clean and inspect the housing bore and lightly stone out any damage marks or burrs.
6. Fit a new bearing ensuring that it is fitted squarely in the bore and up to its abutment face.
7. On a left-hand housing fit the circlip and locate it correctly in the retaining groove.
8. Fit the housing to the ball and trunnion joint shaft, fit the washer and circlip.
9. Fit the half-shaft assembly to the car as described under 'Half-shaft — To fit'.

Printed in England
© Rolls-Royce Motors Limited 1978
May 1978
T.S.D. 4200

Section J3

Final drive crossmember

Final drive crossmember — To remove
1. Follow the procedure given under 'Final drive unit — To remove' carrying out Operations 1 to 14 inclusive.

Note
If the final drive unit is not being dismantled Operation 3, draining the oil may be omitted.

Final drive crossmember mount — To remove
1. To remove a final drive crossmember mount, remove the crossmember as described previously or alternatively, securely support the final drive unit on a jack and carry out Operations 5 to 11 inclusive of 'Final drive unit — To remove'. Lower the final drive unit, crossmember and torque arm assembly at least 15,24 cm. (6 in.).
2. Remove the two setscrews securing the mount to the final drive crossmember, collect the two distance tubes and remove the mount from its locations (see Fig. J16).

Final drive crossmember mount — To fit
Fit the crossmember mount by reversing the procedure given for removal noting that the retaining bolt nuts must be torque tightened in accordance with the figures quoted in Chapter P.

Final drive crossmember — To fit
Fit the final drive crossmember by reversing the procedure given for removal noting the following points.
1. Torque tighten the nuts on the mount centre bolts (see Chapter P), checking from underneath to ensure that the mounts are centrally positioned to the hole in the crossmember.
2. Fit the final drive unit as instructed under 'Final drive unit — To fit'.
3. All nuts and setscrews should be torque tightened in accordance with the figures quoted in Chapter P.

Harmonic damper — To remove
The harmonic damper fitted on the outer ends of the final drive crossmember can be removed with the crossmember in position.
1. Support the final drive unit on a jack; remove the two nuts from the crossmember mount retaining bolts.
2. Remove the counter sunk headed bolt; collect the distance tube and detach the harmonic damper.
3. Hold the damper in a vice; remove the half-nut from the damper centre bolt and carefully screw off the threaded damper weight.
4. Withdraw the centre bolt and remaining damper weight and collect the rubber discs noting the order in which they are removed.
5. Remove the rubber tube and damper weight from the bolt.
6. Inspect the rubber for serviceability and renew if necessary.

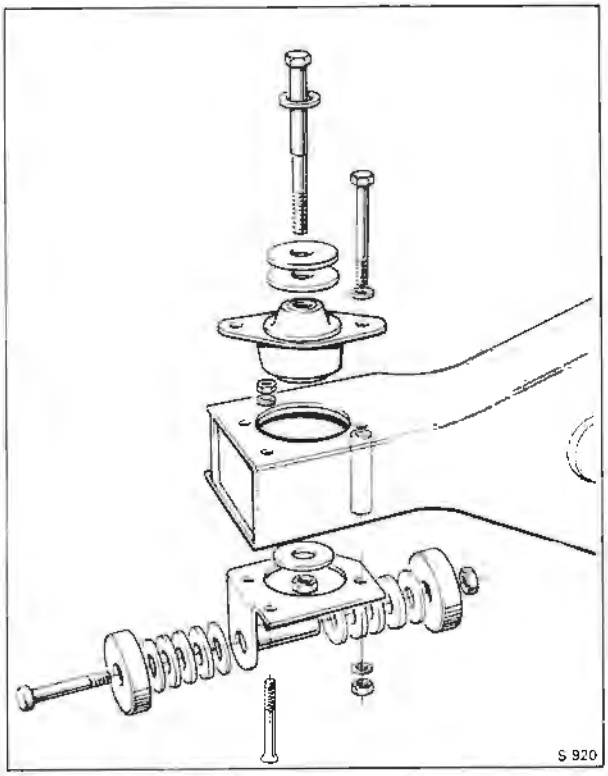

Fig. J16 Final drive crossmember mount and harmonic damper

Harmonic damper — To fit
Fit the harmonic damper by reversing the procedure given for removal noting the following points.
1. Fit the rubber discs with one thin disc on each side of three thick discs to each side of the mounting bracket (see Fig. J16).
2. Compress the rubber discs and screw the threaded damper weight onto the centre bolt until the bolt end is flush with the outer face of the weight. Fit and torque tighten the half nut.
3. Torque tighten all nuts and setscrews in accordance with the figures quoted in Chapter P.

Printed in England
© Rolls-Royce Motors Limited 1978
May 1978
T.S.D. 4200

Section J4

Rear hubs

Printed in England
© Rolls-Royce Motors Limited 1978

Hub units — To remove

1. Position the car on a ramp and securely chock the front road wheels.
2. Remove the wheel disc and loosen, but do not remove, the wheel nuts.
3. Using a hydraulic jack with an extension piece and a hardwood block positioned beneath the final drive differential casing, raise the rear of the car until the road wheels are clear of the ramp.
4. Position blocks and sill beams beneath the body sills. Place screw jacks beneath the trailing arms of the car.
5. Lower the hydraulic jack from beneath the final drive differential casing, allowing the car to rest on the sill beams and supports.
6. Remove the rear road wheel and place a support beneath the trailing arm.
7. Remove the clevis pin from the parking brake cable end connection.
8. Remove the clevis pin from the twin link plates at the parking brake lever end and collect the waved anti-rattle washer.
9. After following the depressurising precautions for the hydraulic braking system (see Chapter G Hydraulic system) disconnect the two brake caliper pressure feed pipes; blank off the pipe ends and caliper ports.
10. Remove the fitted bolts which secure the caliper to the stub axle and remove the brake caliper.
11. Fit a distance piece between the caliper pads to ensure the pistons do not ease out of their bores.
12. Remove the setscrews securing the bearing caps to the yoke at the half-shaft universal joint (see Fig. J13). Separate the universal joint from the hub yoke by easing the half-shaft inwards towards the final drive differential unit. Care should be taken to retain the needle roller bearing caps on the universal joint during removal.
13. Tape the needle roller bearing caps in position and then using a length of cord secure the half-shaft to the final drive crossmember. This will prevent possible damage to the shaft when the hub unit is removed.
14. Remove the two lower setscrews securing the stub axle flange to the trailing arm, together with the parking brake lever linkage. Note the positions of the brake cable adjusting washers.
15. Steady the hub unit and remove the two upper setscrews securing the stub axle flange to the trailing arm. Note the position and length of each setscrew to facilitate assembly.
16. Remove the hub unit assembly from the car.

Hub unit — To dismantle

1. Remove the large nut securing the yoke to the hub drive-shaft (see Fig. J18).
2. Using the extractor tools (RH 9004 and RH 9005), remove the yoke from the tapered hub drive-shaft and collect the woodruff key.
3. Remove the setscrews securing the outer end of the hub drive-shaft to the hub. Withdraw the hub drive-shaft from the hollow stub axle.
4. Unlock and remove the shrouded nut and the key washer from the stub axle.

   Remove the hub, complete with bearings, from the stub axle; collect the chamfered distance piece.
5. Remove the outer bearing inner race. Using a soft metal drift drive out the inner bearing together with the grease retainer.
6. Drive out the outer bearing.
7. Remove the retainer and felt seal from the stub axle counterbore.
8. With the hub dismantled inspect the brake disc and caliper pads for wear or damage. Ensure that the brake disc securing setscrews are correctly torque tightened in accordance with the figures quoted in Chapter P. If it is necessary to remove the brake disc remove the securing setscrews and withdraw the disc from the hub.
9. Thoroughly clean all hub components and inspect for wear or damage.

Hub unit — To assemble

1. Press new bearing outer races into the hub, smaller end of the taper leading. Ensure that the leading faces abut the shoulders of the hub counterbore.
2. Pack the hub with approximately 71 gm. (2 oz.) of the approved grease (see Chapter D Lubricants). The grease must be smeared on the inner wall of the hub to ensure that when the hub is fitted to the stub axle the grease remains in position.
3. Lubricate the new inner races with the approved grease and fit them to their respective outer races.
4. With the inner bearing in position, press the Acme threaded grease retainer into position. Ensure that the leading edge abuts the bearing outer race.

   It is essential that the correct hand of grease retainer is fitted to the respective hubs. The grease retainers can be identified by the 'Acme' thread direction in the bore of the retainer. The right-hand (off-side) hub has a right-hand 'Acme' thread, the left-hand (near-side) hub has a left-hand 'Acme' thread.

Note

When renewing the bearing of more than one hub at the same time, always retain the inner race and roller cage together with the outer race. The inner and outer races are a matched set and should not be fitted separately.

Hub unit — To fit

1. Fit a new felt seal and retainer into the stub axle. Apply a small amount of approved grease (see Chapter D Lubricants) to the felt seal.

May 1978
T.S.D. 4200

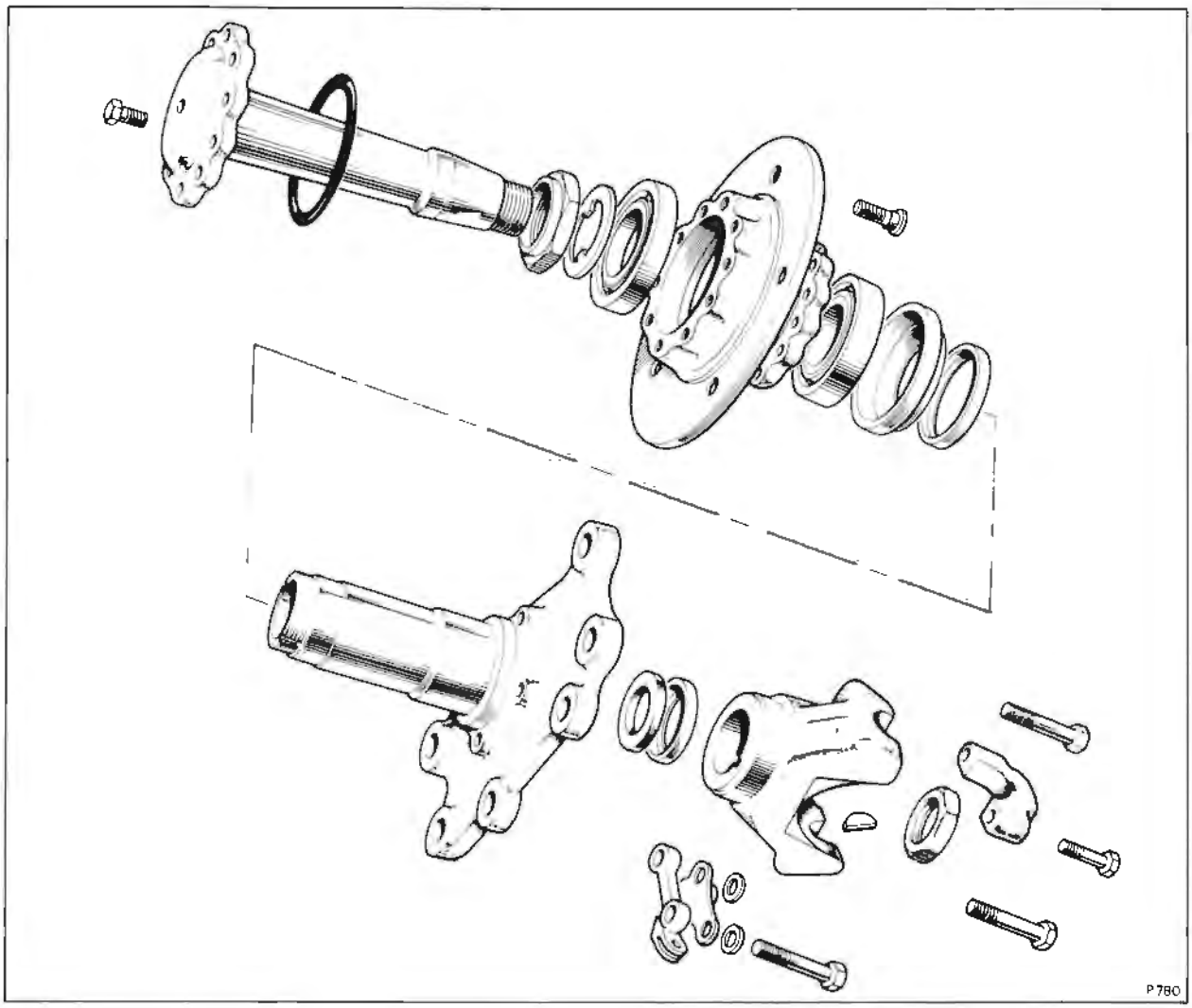

Fig. J17 Rear hub

2. Fit the distance piece, chamfered edge leading, onto the stub axle to abut the shoulder.
3. Position the hub on the stub axle and fit the hardened key washer and new shrouded nut.
4. Tighten the nut sufficiently to remove any bearing end-float. Using a dial test indicator mounted adjacent to the brake disc, measure the run-out of the disc at the maximum possible radius.

The run-out must not exceed 0,178 mm. (0.007 in.) total indicator reading as this is a measure of the stack tolerance of all the components. If the run-out exceeds this figure, it will be necessary to dismantle the hub and brake disc to investigate the cause.
5. After checking the run-out slacken the shrouded nut. Using a feeler gauge placed between the outer bearing and the key washer; tighten the nut sufficiently to lightly grip the feeler gauge to obtain a bearing end-float of between 0,05 mm. and 0,10 mm. (0.002 in. and 0.004 in.) when the feeler gauage is removed.

Alternatively, to obtain the required end-float use suitable dial test indicator equipment secured to the stub axle.

Continuous rotation of the hub is essential during this operation to ensure that the taper rollers seat correctly in the outer races.
6. Peen the shroud of the nut to locate into the grooves of the stub axle; remove the feeler gauge or dial test indicator.

Note
Incorrect setting i.e. exerting a load on the bearings or giving excessive end-float, will promote premature bearing wear.

The remaining operations for fitting the rear hub unit are a careful reversal of the procedure given for the removal and dismantling, noting the following operations.
7. Fit a new rubber 'O' ring onto the hub drive-shaft, apply a small amount of grease to the ring before fitting.
8. Fit the key to the hub drive-shaft taper before fitting the hub unit yoke.
9. Apply Rocol MTS 1000 grease or equivalent to the threads and abutment face of the yoke retaining nut and torque tighten to 69,50 kgf.m. (500 lbf.ft.) using torque spanner (RH 8014) and socket (RH 8026).

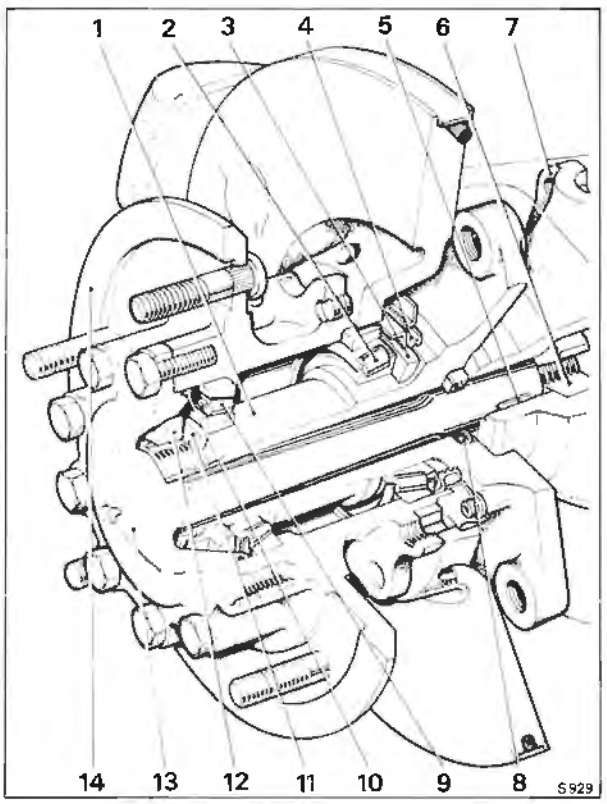

Fig. J18 Rear hub

1 Stub axle
2 Inner taper roller bearing
3 Distance piece
4 Acme thread seal
5 Key
6 Nut
7 Yoke
8 Felt seal and retainer
9 Outer taper roller bearing
10 Seal
11 Keyed adjusting washer
12 Shrouded nut
13 Drive-shaft (hub)
14 Hub

10. When fitting the half-shaft universal joint to the hub yoke ensure that the bearing caps seat correctly in the yoke and that the bearing cap setscrews are torque tightened in position (see Chapter P).
11. When fitting the brake feed pipe and parking brake linkage refer to Chapter G Hydraulics, for information regarding bleeding procedure and precautions to be taken.
12. Check the parking brake adjustment and operation.
13. Fit the road wheel and remove the supports from beneath the body and trailing arms.
14. Tighten the wheel nuts and fit the wheel disc.

Printed in England
© Rolls-Royce Motors Limited 1978
May 1978
T.S.D. 4200

Section J5

Dimension data

Final drive unit	
Backlash–pinion to crown wheel	Etched on crown wheel
Backlash–differential housing pinions	0,0762 mm. (0.003 in.)
End float–differential housing pinions	Nil
Crown wheel run-out (maximum)	0,05 mm. (0.002 in.)
Differential housing–trunnion diameters	19,036 mm.-19,05 mm. (0.7497 in.-0.750 in.)
Differential housing pinions–bore diameters	19,05 mm.-19,075 mm. 0.7505 in.-0.751 in.
Differential housing bevel pinion gear-bearing diameter	44,272 mm.-44,297 mm. (1.743 in.-1.744 in.)
Differential housing bevel pinion gear bore diameter	44,450 mm.-44,475 mm. (1.750 in.-1.751 in.)
Differential housing and end cap–bearing locating diameters	50,85 mm.-50,863 mm. (2.002 in.-2.0025 in.) 66,732 mm.-66,738 mm. (2.62725 in.-2.6275 in.)
Differential housing bearings–bore diameters	50,8 mm.-50,812 mm. (2.000 in.-2.0005 in.) 66,675 mm.-66,687 mm. (2.625 in.-2.6255 in.)
Differential housing bearings–outside diameters	88,9 mm.-88,925 mm. (3.500 in.-3.501 in.) 107,950 mm.-107,975 mm. (4.250 in.-4.251 in.)
Final drive casing–differential housing bearing locating bores	88,925 mm.-88,938 mm. (3.501 in.-3.5015 in.) 107,975 mm.-108.0 mm. (4.251 in.-4.252 in.)
Final drive casing-pinion housing locating diameters	105,410 mm.-105,422 mm. (4.150 in.-4.1505 in.) 105,715 mm.-105,73 mm. (4.162 in.-4.1625 in.)
Pinion housing–locating diameters	105,410 mm.-105,422 mm. (4.150 in.-4.1505 in.) 105,752 mm.-105,765 mm. (4.1635 in.-4.164 in.)
Pinion shaft–bearing locating diameters	34,956 mm.-34,963 mm. (1.37625 in.-1.3765 in.) 44,581 mm.-44,588 mm. (1.75125 in.-1.7515 in.)
Pinion bearings–bore diameters	34,925 mm.-34,937 mm. (1.375 in.-1.3755 in.) 44,450 mm.-44,462 mm. (1.750 in.-1.7505 in.)
Pinion housing–pinion bearing locating diameters	72,294 mm.-72,319 mm. (2.8423 in.-2.8433 in.) 95,199 mm.-95,224 mm. (3.748 in.-3.749 in.)
Pinion bearings–outside diameters	72,232 mm.-72,257 mm. (2.8438 in.-2.8448 in.) 95,250 mm.-95,275 mm. (3.750 in.-3.751 in.)
Pinion–splined diameter	40,546 mm.-40,609 mm. (1.5963 in.-1.5988 in.) over 4,000 mm. (0.1575 in.) diameter rollers
Pinion–nose bearing locating diameter	38,524 mm.-38,534 mm. (1.5167 in.-1.5172 in.)
Final drive casing–pinion nose bearing bore diameter	61,981 mm.-61,986 mm. (2.4402 in.-2.4404 in.)
Pinion nose bearing–outside diameter	61,997 mm.-61,999 mm. (2.44045 in.-2.44095 in.)
Pinion nose bearing–running clearance	0,027 mm.-0,038 mm. (0.0005 in.-0.0015 in.)
Final drive half-shafts	
Side housing–bearing locating bore	66,649 mm.-66,672 mm. (2.6242 in.-2.62445 in.)
Bearing–side housing–outside diameter	67,056 mm.-67,068 mm. (2.6240 in.-2.6245 in.)

Printed in England
© Rolls-Royce Motors Limited 1978
May 1978
T.S.D. 4200

Bearing—side housing—bore diameter	37,863 mm.-38,105 mm. (1.4997 in.-1.5002 in.)
Ball and trunnion joint shaft—bearing diameter	38,093 mm.-38,10 mm. (1.49975 in.-1.500 in.)
Ball and trunnion joint spline diameter	41,846 mm.-41,859 mm. (1.6475 in.-1.6481 in.) over 3,9578 mm. (0.1512 in.) diameter rollers
Ball and trunnion joint—trunnion pin bore	24,780 mm.-24,775 mm. (0.9756 in.-0.9754 in.)
Ball and trunnion joint—trunnion pin diameter	24,838 mm.-24,889 mm. (0.97745 in.-0.97765 in.)
Trunnion pin—minimum pressing load	2½ tons/sq. in.
Ball and trunnion joint—spherical ball diameter	44,424 mm.-44,437 mm. (1.7490 in.-1.7495 in.)
Ball and trunnion joint—spherical ball bore	30,832 mm.-30,835 mm. (1.2135 in.-1.2140 in.)
Needle rollers (29 off)—diameter	2,997 mm.-3,002 mm. (0.1180 in.-0.1182 in.)
Ball and trunnion joint—spherical ball locating bores	44,450 mm.-44,475 mm. (1.750 in.-1.751 in.)

Section J6

Workshop tools

RH 7861	Pre-loading jig – Belleville washers – Final drive right-hand side housing
RH 8014	Torque wrench – 0 lbf.ft. to 600 lbf.ft. Hub yoke nut
RH 8016	Extractor Beam When used in conjunction with RH 8017, RH 8020, RH 8021 and RH 8022, the extractor beam can be used to remove the rear tapered roller bearing from the final drive pinion
RH 8017	Hydraulic Ram To be used in conjunction with RH 8016, RH 8020, RH 8021 and RH 8022 as detailed above
RH 8020	Separator See RH 8017 for uses
RH 8022	Pressure Pads See RH 8017 for uses
RH 8026	Socket head 1. 11/16 A/F. To be used in conjunction with RH 8014
RH 8032	Stiffening bar – Final drive casing
RH 8307	Converter – Torque Spanner Converts the 19 mm (0.75 in.) square drive of the torque spanner RH 8014 to 25,4 mm (1.0 in.) square drive
RH 8308	Applicator – Rear drive shaft rubber seal
RH 8457	Assembly Tool – Pinion coupling flange
RH 8470	Extractor – Pinion coupling flange To be used in conjunction with RH 8017
RH 9004	Extractor – Rear hub end yoke To be used in conjunction with RH 9005
RH 9005	Hydraulic Ram To be used in conjunction with RH 9004

Printed in England
© Rolls-Royce Motors Limited 1978
May 1978
T.S.D. 4200

Chapter J

Part II
Final drive

Applicable to Corniche and Camargue cars from serial number 50 001.

Section

J1m Final drive
J2m Half-shafts
J3m Final drive crossmember
J4m Rear hubs
J5m Dimensional data
J6m Workshop tools

All Section, Page and Figure references are prefixed (m) to denote cars filled with hydraulic system mineral oil.

Printed in England

© Rolls-Royce Motors Limited 1979

July 1979

TSD 4200

Section J1m

Final drive

Introduction

The final drive assembly comprises of a centre differential gear case which houses the hypoid crown wheel, pinion and differential housing gears. Drive-shafts fitted with a trunnion assembly at the inner end and a universal joint at the outer end transmit the drive to the rear wheels.

The final drive case is attached to a crossmember which is mounted to the body by the use of rubber mounts.

Final drive torque reaction is controlled by a laminated torque arm bolted to the final drive case and rear suspension crossmember.

Removal of the final drive can be carried out by two methods and reference should be made to the instructions in this section before removal is commenced.

Never disconnect the frame tubes connecting the final drive crossmember to the rear suspension crossmember without removing all suspension load from the rear sub-frame assembly. For details refer to Final drive — To remove.

A fully adjusted final drive assembly is available as a service exchange item. This assembly is supplied without half-shaft assemblies, but is fitted with side bearing housings.

When fitting half-shafts to a replacement final drive assembly, it is essential that the side bearing housings supplied with the assembly are fitted to the half-shafts. The fitting of any other bearing housings will result in an incorrectly adjusted final drive assembly.

Final drive — To remove

Method 1

This method requires the removal of both rear wheel hubs, but allows the removal of the final drive without disturbing the frame tubes.

1. Position the car on a ramp and securely chock the front road wheels.

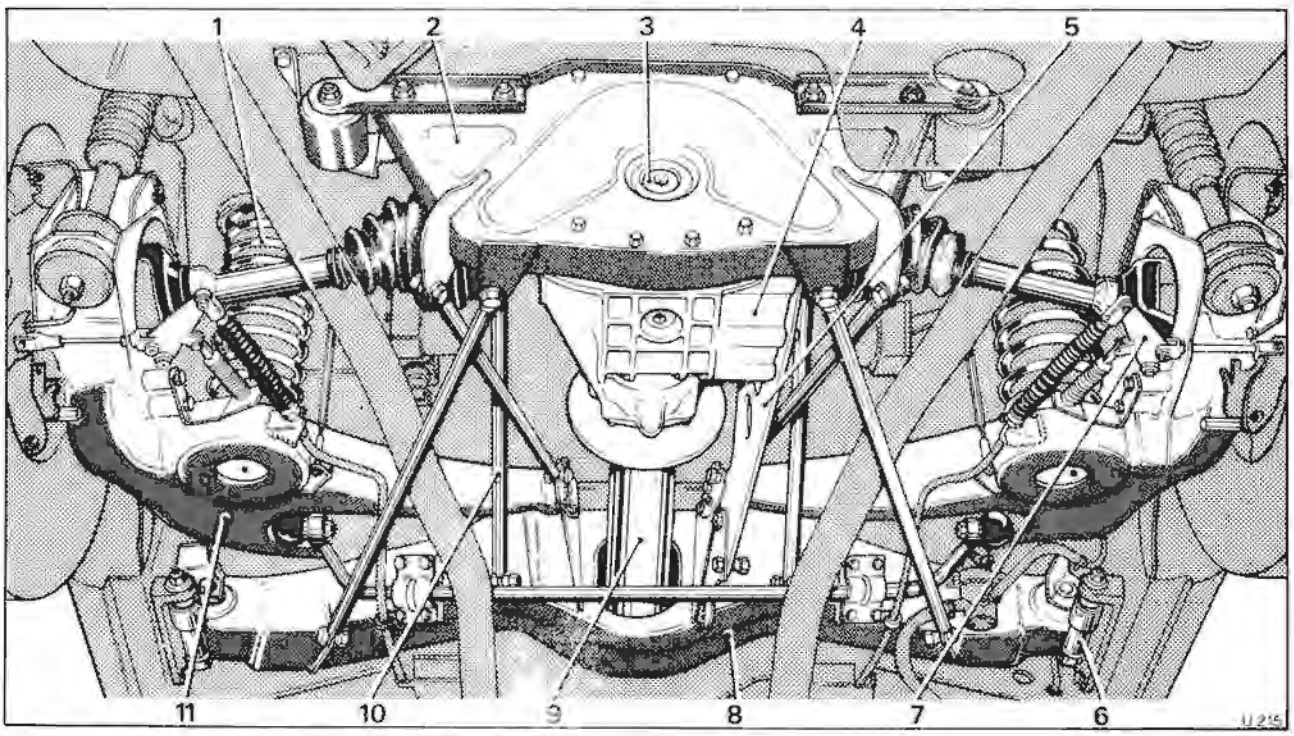

Fig. J1m Final drive in position

1 Suspension spring
2 Final drive crossmember
3 Oil filler and level plug
4 Final drive unit
5 Torque arm
6 Crossmember damper
7 Parking brake actuation lever
8 Rear suspension crossmember
9 Propellor shaft
10 Frame tubes (6)
11 Trailing arm

Printed in England
© Rolls-Royce Motors Limited 1979

2. Switch on the ignition. Select the 'N' (neutral) position on the gear range selector; switch off the ignition.
3. Remove the drain and level plugs from the final drive and allow the oil to drain into a container. It is advisable to carry out this operation when the oil is warm e.g. immediately after the car has completed a run.

After draining clean and fit the drain plug complete with a new sealing washer.

4. Insert a spring compression tool RH 9299 into each rear suspension spring (see Chapter H Part II). Compress the springs to remove all spring load from the trailing arms.
5. Depressurise the hydraulic systems as described in Chapter G Part II Section G2m.

Note

Under no circumstances should operations to remove the final drive be carried out while spring or strut loads are applied to the rear sub-frame.

6. Locate a hydraulic jack under the final drive case and raise the rear of the car. Position sill blocks beneath

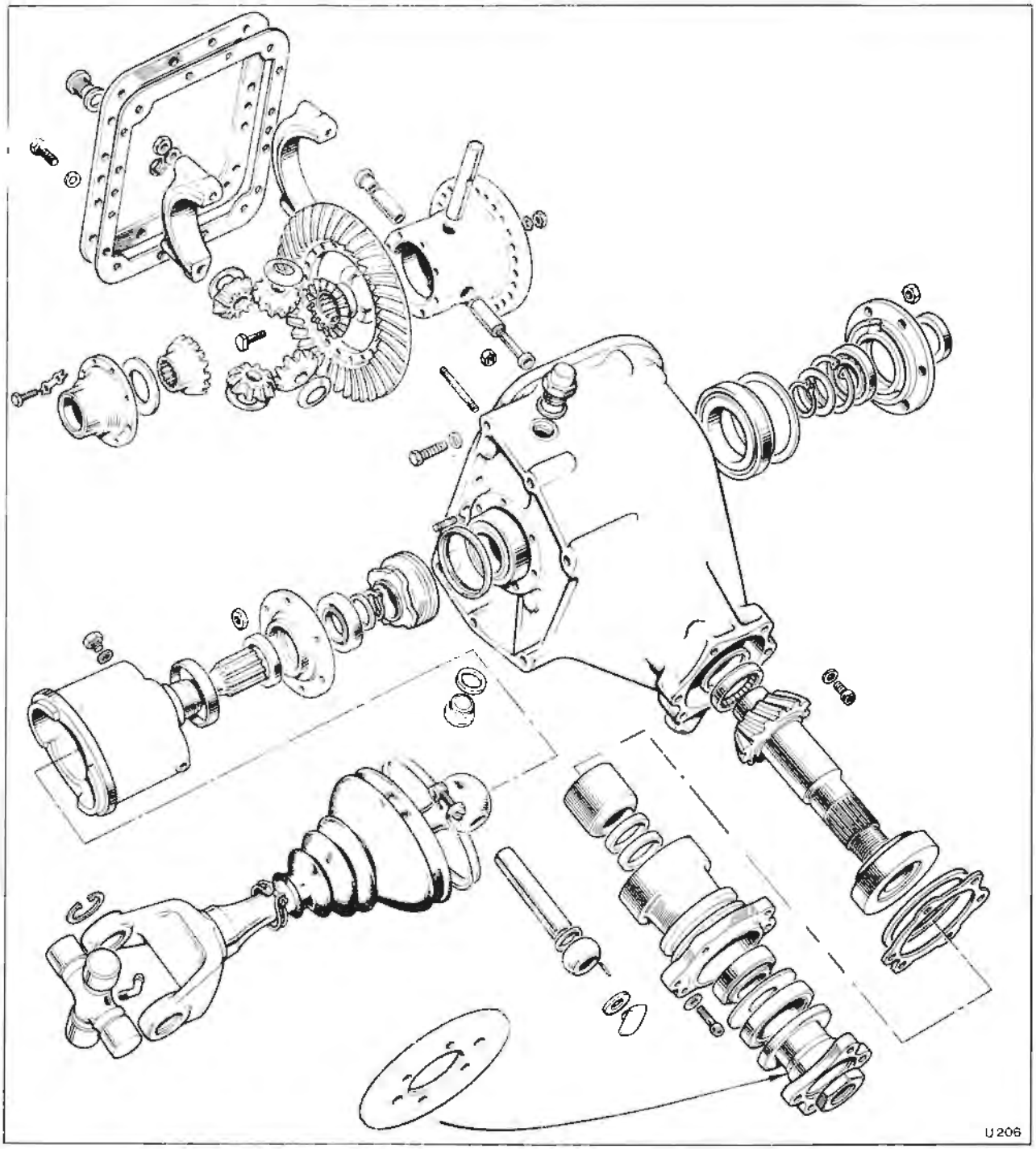

Fig. J2m Final drive

the rear end of the car sills. Lower the hydraulic jack from beneath the final drive allowing the sill blocks to support the car.

7. Remove the rear wheels. Support the trailing arms on jacks.

8. Remove the rear hub and brake caliper assemblies as described in Section J4m.

9. Disconnect the propeller shaft from the final drive flange. Slide the shaft as far forward as possible.

Additional clearance between the propeller shaft and the pinion flange can be obtained by slackening the bolts on the front engine mount stop plate. This will allow the engine to be moved forward. Place a wooden wedge between the front sub-frame and engine sump to retain the engine in this forward position.

10. Remove the six retaining nuts from the right-hand half-shaft bearing housing. Carefully withdraw the half-shaft from the final drive. Collect the belleville washer assembly and adjusting washer from behind the housing.

11. Remove the six retaining nuts from the left-hand half-shaft bearing housing. Carefully withdraw the half-shaft from the final drive. Collect the large adjusting washer fitted between the bearing housing and the crown wheel bearing.

Note

When handling a half-shaft assembly, both ends should be supported. Do not carry the shaft holding one end only, place the shaft in an unsupported position or allow the trunnion body to hang downwards, otherwise oil may be lost through the small breather hole in the centre of the splined shaft.

12. Support the final drive with a hydraulic jack positioned beneath the centre casing.

13. Remove the two securing bolts from the front end of the torque arm.

14. From the rear face of the final drive crossmember remove the setscrews securing the final drive assembly.

15. Slide the propeller shaft as far forward as possible to obtain maximum clearance between the shaft and final drive pinion flange.

16. Carefully ease the final drive away from the crossmember and slowly lower the final drive from the car.

Note

During this operation it will be necessary to raise the front of the torque arm to obtain the required clearance to lower the final drive from the car. Care therefore, must be taken to ensure that the final drive is held securely on the hydraulic jack throughout the removal operation.

Method 2

Removal of the final drive by this method enables the half-shafts to be removed with the final drive assembly. For this to be carried out, all spring and suspension strut load must be removed from the rear sub-frame to enable the removal of the four lower frame tubes.

Never remove the frame tubes with suspension loads still applied.

Jury bolts (RH 9575) must be used to enable the tubes to be removed.

1. Carry out Operations 1 to 7 inclusive of Method 1.

2. Remove the rear sections of the exhaust system as described in Chapter O.

3. Remove the rear suspension springs as described in Chapter H Part II.

4. Remove one of the small dampers fitted at each end of the rear suspension crossmember. Insert a jury bolt (RH 9575) and tighten the lock nuts (see Fig. J3m). Ensure load is not applied to the crossmember by the jury bolt. Repeat the operation at the opposite end of the crossmember.

5. Disconnect the propeller shaft from the final drive pinion flange.

6. Disconnect the half-shaft outer universal joints from the hub yokes by removing the clamp setscrews; remove the four clamps. Finally detach the joints by easing the half-shafts inwards. Ensure that the universal joint needle roller housings are held in position and retained to the universal joint when removed from the yoke.

7. Support the final drive with a hydraulic jack placed beneath the centre casing. Do not allow the jack to apply any upward load.

8. Remove the setscrews securing the centre case to the final drive crossmember. Also remove the two bolts securing the front end of the torque arm,to the rear suspension crossmember.

9. Slide the propeller shaft as far forward as possible.

10. Ensuring that the final drive assembly is supported at all times, carefully draw the assembly forward away from the crossmember.

Note

If required, additional clearance between the propeller shaft and the pinion flange can be obtained by slackening the bolts on the front engine mount stop plate. This will allow the engine to be moved forward. Place a wooden wedge between the front sub-frame and engine sump to retain the engine in this forward position. Do not allow the final drive casing to become wedged against the final drive crossmember.

11. Carefully noting the positions of the frame tubes and to which side of the mounting bracket they are fitted, remove the four lower frame tubes. Do not disturb the two remaining upper tubes.

12. Lower the final drive assembly slightly and carefully manipulate the half-shafts from the trailing arm end housings.

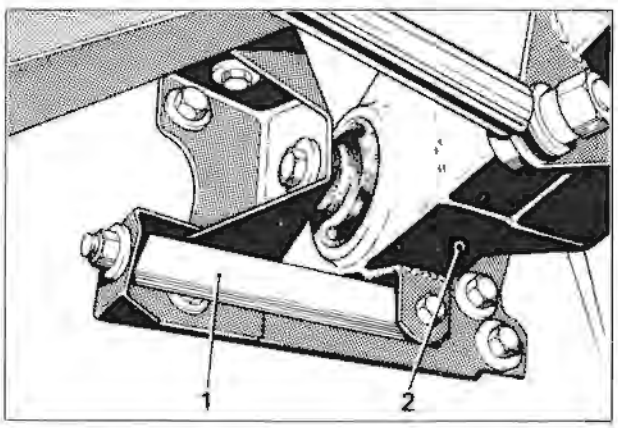

Fig. J3m Jury bolt in position

1 'Jury' bolt

2 Rear suspension crossmember

Printed in England

© Rolls-Royce Motors Limited 1979

13. Support the half-shafts and carefully lower the final drive assembly and torque arm from beneath the car.

Final drive unit — To dismantle

Operations 1 and 2 will have been carried out if the final drive unit was removed as described in Method I of Final drive — To remove.

1. Remove the six retaining nuts from the right-hand bearing housing and withdraw the shaft assembly. Collect the distance piece and bellville washer assembly together with the adjusting washer from behind the housing.

2. Remove the six retaining nuts from the left-hand half-shaft bearing housing and withdraw the shaft. Collect the adjusting washer fitted between the housing and the large crown wheel bearing.

3. Unscrew the setscrews retaining the final drive casing rear cover. Remove the cover.

4. Remove the nuts and washers from the bearing caps on each side of the crown wheel and differential assembly (see Fig. J4m).

Correlate the caps and casing to ensure that the caps can be fitted into their original positions and then withdraw the caps.

Note

The bearing cap and casing are machined as pairs, therefore, although the caps cannot be fitted to the incorrect side, they must not be fitted in their reversed positions.

5. The crown wheel and differential assembly can now be raised slightly, moved away from the pinion and carefully removed from the casing.

Note

Care should be taken during Operations 4 and 5 to ensure that the two large taper roller bearing tracks do not fall off, as this could cause damage to the rollers or tracks.

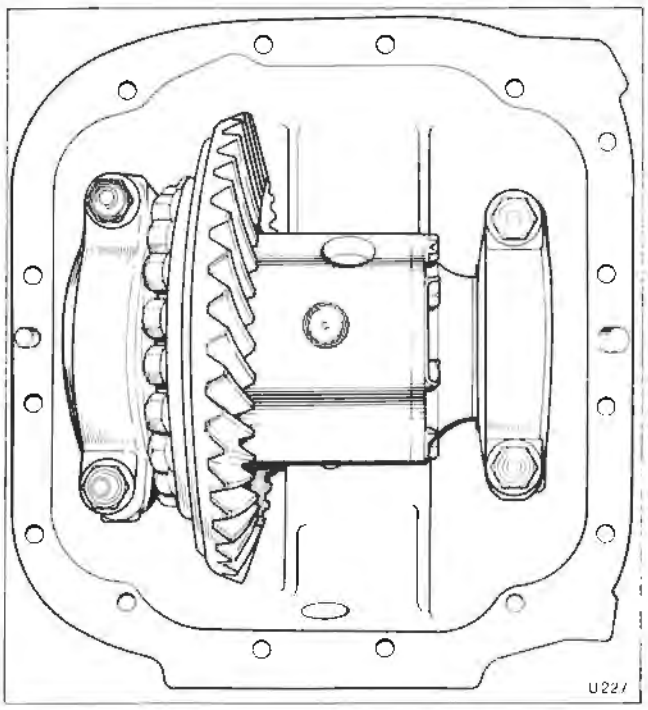

Fig. J4m Differential and crown wheel in position

6. Remove the four setscrews which secure the pinion housing to the front flange of the casing and insert extractor screws into the two tapped holes in the pinion housing flange.

7. Place the casing in an oven having a temperature of 110°C. (230°F.) for approximately fifteen minutes.

8. Remove the casing from the oven and extract the pinion housing using the two extractor screws; care should be taken to turn the screws evenly and together.

9. To remove the pinion nose bearing, remove the two socket headed screws, retaining nuts and washers and withdraw the bearing.

Crown wheel and differential assembly — To dismantle

When dismantling the crown wheel and differential assembly care should be taken to ensure that all thrust washers and bearing tracks are retained with their appropriate parts to ensure that they are assembled in their original positions.

1. Remove the two bearing outer tracks.

2. Remove the nuts, bolts and washers securing the crown wheel to the differential housing; remove the crown wheel.

3. Unlock and remove the eight setscrews securing the differential housing end cap, remove the cap, splined pinion gear and adjusting washer.

4. Remove the locking nut and long setscrew from the centre of the split trunnion pin. Remove the trunnion pins, bevel gears and dished thrust washers.

5. Remove the splined pinion gear and thrust washer from the opposite end of the pinion housing.

6. Wash all parts thoroughly and dry with compressed air. If it is necessary to renew the large taper roller bearings, press them off the differential housing and end cap.

7. All components should be thoroughly inspected for wear and damage and any defective items renewed.

Thrust washers should be flat and parallel, excluding the four dished thrust washers fitted behind the bevel gears. Ensure that gears and all bearing surfaces are free from damage, pitting, score marks, burrs and excessive wear.

Crown wheel and differential assembly — To assemble

1. If new taper roller bearings are to be fitted they must be pressed squarely on to the diameters situated on the end of the differential housing and end cap. Note that the larger of the two bearings is fitted to the housing and that both bearings should be fully seated against their abutment faces

2. If the adjusting washer positions are not known or new pieces are being fitted, the procedure for assembling the differential housing described in Operations 3 to 6 inclusive should be carried out.

3. Fit the splined bevel pinion into the end of the differential housing without an adjusting washer behind the head.

4. Fit the trunnion pins, dished washers and bevel gears. The long bolt and nut which connects the split trunnion pins should be torque tightened to between

1,6 kgf.m. and 1,9 kgf.m. (12 lbf.ft. and 14 lbf.ft.).

5. Push the splined pinion gear into mesh with the bevel gears as far as possible. Measure the distance from the end of the differential housing to the end face of the pinion gear (see Fig. J5m).

Pull the pinion gear back out of mesh as far as possible and again measure the distance from the end of the housing to the end of the gear.

The difference between these two measurements will give the nominal thickness of adjusting washer required behind the gear head.

6. Dismantle the gears, place the correct adjusting washer behind the bevel pinion and assemble the gears.

Adjusting washers are available in a range of between 2,13 mm. and 2,94 mm. (0.084 in. and 0.116 in.) in 0,05 mm. (0.002 in.) increments. The washers must be fitted with the chamfer and oil grooves against the back face of the gear.

7. Rotate the gears to ensure that they are perfectly free but with a maximum backlash of 0,076 mm. (0.003 in.) and no end-float on the bevel gear; adjusting the washer as necessary.

8. Fit the housing end cap and the other splined bevel pinions and repeat Operation 3 to 7 inclusive to determine the adjusting washer required.

Note

When the unit is assembled correctly the gear should turn freely with a maximum of 0,076 mm. (0.003 in.) backlash between the gears and no end-float in the splined bevel pinions.

9. When the differential gears are correctly set, check that the torque tightness of the split trunnion centre bolt is within the figures quoted in Chapter P then lock the nut in position.

10. Torque tighten the end cover setscrews in accordance with the figures quoted in Chapter P and lock the tab-washers.

11. Fit the crown wheel to the differential housing and torque tighten the nuts to the figures quoted in Chapter P.

12. Check the crown wheel for axial run-out.

Any convenient method may be used to check this e.g. on a mandrel between the centres. One method which may be used is described in Operations 13 and 14.

13. Place the roller bearing outer tracks in position and stand the assembly on one end. Position the assembly in a press with one adjusting washer fitted to each bearing (see Fig. J6m).

14. Apply light pressure and using a dial indicator, check the run-out of the crown wheel; the run-out should not exceed 0,05 mm. (0.002 in.).

If the run-out exceeds this figure vary the crown wheel position relative to the differential housing until the run-out is within the 0,05 mm. (0.002 in.) limit.

Pinion housing — To dismantle

1. Remove and discard the 'O' ring fitted to the pinion housing.

2. Unscrew and remove the nut securing the pinion flange and damper; remove the flange using the special hydraulic ram (RH 8017) and special extractor beam (RH 8470).

3. Remove the pinion oil seal and the oil flinger fitted behind it.

4. Position the housing in a press with the pinion gear downwards. With the housing lower end firmly supported, carefully press the pinion out of the housing.

5. Collect the spacer and adjusting washers from the pinion shank and the taper roller bearing from the housing.

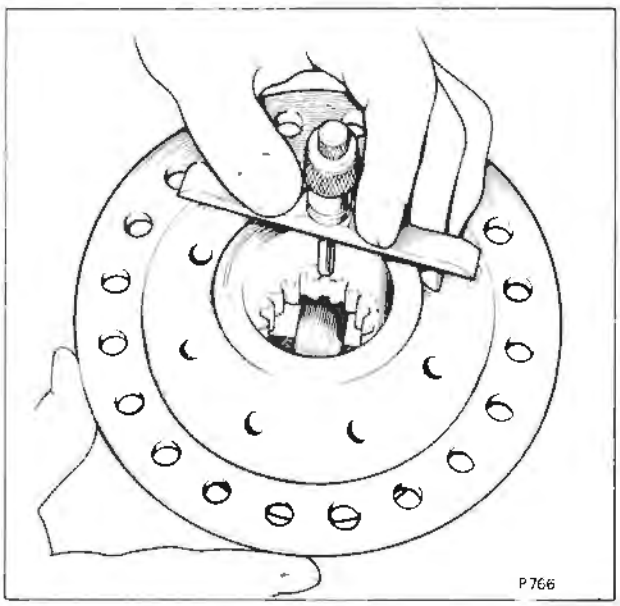

Fig. J5m Splined bevel pinion measurement

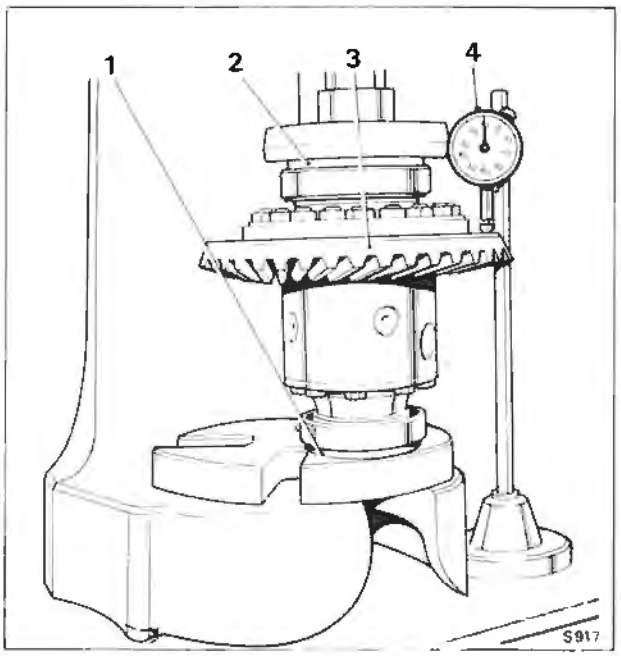

Fig. J6m Checking the crown wheel

1 Adjusting washer
2 Adjusting washer
3 Crown wheel and differential assembly
4 Dial test indicator

Printed in England
© Rolls-Royce Motors Limited 1979

6. If new taper roller bearings are to be fitted, the outer tracks must be removed from the housing using a soft drift and a hammer, taking care to avoid damaging the bearing locating bores.
7. The large taper roller bearing should be removed from beneath the pinion head using a press and the special extraction tool (RH 8016).
8. Wash all parts thoroughly in paraffin and dry with compressed air.
9. Inspect parts for serviceability; any showing damage, pitting or excessive wear, should be renewed.

Pinion housing — To assemble (see Fig. J7m)

1. Lightly lubricate all components paying particular attention to the roller bearing faces.
2. If new bearings are to be fitted press the outer tracks into the pinion housing and the large roller bearing on to the pinion, ensuring that the bearings are square and seated on their abutment faces.
3. Enter the pinion into the housing then fit the spacer and two adjusting washers onto the pinion shank.

The two washers determine the pre-load on the pinion bearings.

It is important that the washers are free from defects and are flat and parallel to within 0,012 mm. (0.0005 in.).

If the pinion bearings have not been renewed, the original washers may be used. If new bearings have been fitted, washers whose combined thickness amounts to between 6,85 mm. and 8,89 mm. (0.270 in. and 0.280 in.) should give the best initial setting.

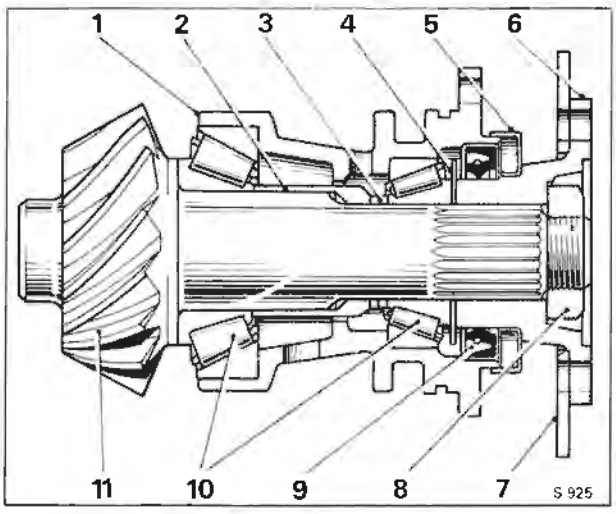

Fig. J7m Pinion assembly

1	Pinion housing
2	Spacer
3	Pre-load adjusting washers
4	Oil flinger
5	Shield
6	Pinion flange
7	Damper
8	Pinion flange nut
9	Oil seal
10	Taper roller bearings
11	Pinion

4. Support the pinion and housing. Press the upper bearing on to the pinion shank until it abuts the adjusting washers.
5. Fit the oil flinger and a new oil seal to the housing. Ensure that the front face of the seal is 3,2 mm. (0.125 in.) below the face of the housing and the seal lip is pointing inwards. The outside diameter of the seal should be brushed with 'Wellseal' sealant before fitting.
6. Smear the inner face of the seal with axle oil, fit the transmission damper to the pinion flange. Enter the flange on to the pinion shank taking care not to damage the oil seal or pinion threads.
7. Press the coupling flange on to the pinion shank using assembly tool (RH 8457) and fit the nut.
8. Tighten the nut to the torque figure quoted in Chapter P. Rotate the pinion housing during tightening to check the free movement of the bearings.
9. Rotate the pinion in the housing several times in both directions then check the pre-load.

The pre-load on the pinion bearings when the housing is out of the final drive casing should be between 1,6 kgf.m. and 2,3 kgf.m. (12 lbf. in. and 17 lbf. in.). This can be checked using a spring balance pulling on a bolt inserted into one of the holes in the pinion flange.

Note

The holes in the pinion flange are 4,762 cm. (1.875 in.) away from the centre of the pinion and therefore if this method is used the spring balance reading should be between 2,9 kgf. and 4,08 kgf. (6.4 lbf. and 9.0 lbf.). Ensure that the line of pull on the spring balance is truly tangential.

The spring balance reading obtained to initially rotate the pinion will be high. It is the lower steady reading when the pinion is rotating which indicates the pre-load.

10. If the pre-load is not correct the pinion must be extracted from the housing and the adjusting washers changed as necessary to obtain the correct reading.

Adjusting washers are available in a range of between 2,66 mm. and 4,06 mm. (0.105 in. and 0.160 in.).

Reducing the combined thickness of the washers will increase the pre-load and increasing the thickness will reduce it. Very small changes to the thickness of the washers has a marked effect on the pre-load figure.

Final drive unit -- To assemble

To assemble the final drive unit reverse the procedure given for dismantling ensuring that the crown wheel and pinion are in their correct relative positions and that the amount of backlash between the two gears is correct.

All parts must be cleaned thoroughly prior to assembly and all bearings lubricated.

1. Before assembling the final drive unit the stiffening bar (RH 8032) should be fitted to the final drive casing.
2. Partially screw four 3/8 in. U.N.F. studs into the threaded holes in the front of the final drive casing. It is sufficient to fit these by hand as they serve only as location pegs for the pinion housing.
3. If the pinion nose bearing has been removed from the casing, fit the bearing, snap ring and the two socket headed retaining screws, nuts and washers. Torque tighten the screws (see Chapter P) and centre punch the

nuts in three places to lock them into position.

4. Note the dimension stamped on the final drive casing (see Fig. J8m) then place the casing in an oven having a temperature of 110°C. (230°F.) for approximately thirty minutes.

5. Carefully measure from the back face of the pinion housing front flange to the face of the pinion gear, adjacent to the nose bearing diameter (see Fig. J9m dimension X).

Add this figure to the dimension etched on the rear face of the pinion (dimension Y).

The dimension 'A' stamped on the final drive casing which was noted previously must now be subtracted from the total of dimensions 'X' and 'Y'.

The final dimension gives the thickness of the split adjusting washer which must be used between the pinion housing flange and the casing, to place the pinion in the correct position.

Thickness of washer = X + Y − A

The above measurements must be taken carefully and accurately.

Split adjusting washers are available in the following sizes 3,048 mm. (0.120 in.), 3,175 mm. (0.125 in.), 3,302 mm. (0.130 in.), 3,479 mm. (0.137 in.) and 3,784 mm. (0.147 in.).

6. Remove the casing from the oven and fit the split adjusting washers over the studs.

7. Fit a new 'O' ring to the pinion housing and insert the housing into the casing as far as possible.

Note

The pinion housing has one off-set hole and can therefore only be fitted in one position. It is advisable to establish this position before entering the housing into the casing.

8. Remove the locating studs; fit the four Allen cap setscrews and tighten them progressively and evenly to a torque figure of between 4,0 kgf.m. and 4,4 kgf.m. (29 lbf.ft. and 32 lbf.ft.).

9. Examine the crown wheel and note the backlash figure etched on the back face.

10. Carefully place the crown wheel and the differential assembly in position; fit the bearing caps but do not tighten the nuts.

11. If the two final drive side housings are still connected to the half-shafts, remove the retaining circlips and remove the housings from the shafts.

12. Fit the adjusting washer with the chamfered face outward, three belleville washers with the convex side outward, distance piece and housing on the right-hand side of the final drive casing and progressively tighten the housing securing nuts (see Fig. J14m).

13. Fit the two adjusting washers behind the crown wheel bearing and fit the left-hand side housing. Progressively tighten the housing nuts whilst rocking the crown wheel back and forth to ensure that there is backlash between the gears.

14. Mount a dial test indicator on the final drive casing with the indicator pad on the flank of a crown wheel tooth.

15. Zero the indicator and 'rock' the crown wheel back and forth noting the backlash.

16. The backlash should be checked at four positions around the crown wheel and an average reading taken. This figure should be marginally less than the backlash figure etched on the crown wheel.

If it does not conform, the thickness of the washer behind the bearing must be varied to obtain the correct reading.

Washers are available in a range of between 5,664 mm. and 6,604 mm. (0.223 in. and 0.260 in.) in increments of 0,101 mm. (0.004 in.).

17. In order to obtain the required result equal amounts may be ground from each side of the washer, taking care to ensure that, after grinding, the washer is still flat and parallel to within 0,025 mm. (0.001 in.).

18. When the backlash is correct, remove the side housing from the centre casing; slide the housing on to the half-shaft assembly and fit the circlip.

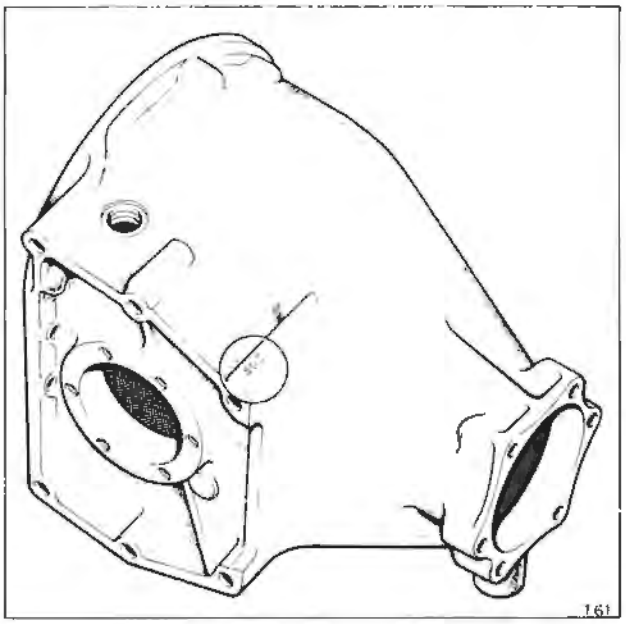

Fig. J8m Stamped dimension on final drive casing

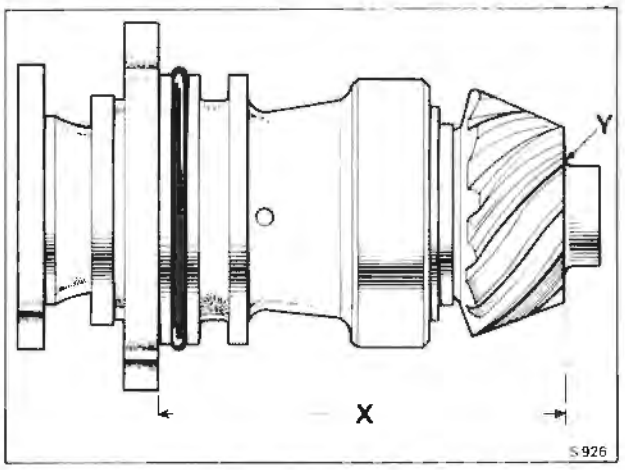

Fig. J9m Pinion Housing measurement

X Dimension between housing and pinion gear

Y Dimension etched on pinion gear face

Printed in England
© Rolls-Royce Motors Limited 1979

19. Fit the complete assembly to the final drive casing after applying a light coating of SQ 32M jointing compound to the joint faces of the casing and housing.
20. Remove the right-hand housing, distance piece, belleville washers and adjusting washers.
21. Accurately measure the distance from the casing flange to the taper roller bearing outer track (see Fig. J10m).
22. Place the housing, distance piece and belleville washers in the checking jig (RH 9578) and tighten the jig end pieces until the belleville washers are flat (see Fig. J11m).
23. Using feeler gauges, measure the distance between the housing flange face and the top of the two pins on the gauge. The result added to the nominal pin height marked on the gauge gives the distance from the side housing to the belleville washers.

Subtract this dimension from the dimension previously taken between the casing flange and the taper bearing; the result gives the thickness of the adjusting washer which must be fitted between the belleville washers and the taper bearing, to give the correct preload.

Adjustment washers are available in a range of between 5,08 mm. and 6,60 mm. (0.200 in. and 0.260 in.) in increments of 0,254 mm. (0.010 in.). Washers may be lightly ground to obtain the correct dimensions but if this is done equal amounts must be removed from each side and the washer must be kept flat and parallel.
24. Fit the right-hand side housing to the half-shaft.
25. Fit the correct washer with the chamfered side outwards; also the distance piece and three belleville washers assembly, convex side outwards. Fit the housing and half-shaft assembly after applying a light coating of SQ 32M jointing compound to the flange faces.
26. Tighten the housing securing nuts progressively and evenly and finally torque tighten them to the figure quoted in Chapter P.
27. Torque tighten the nuts securing the two large bearing caps in accordance to the figures quoted in Chapter P.
28. Release the six side cover retaining nuts approximately 3,17 mm. (0.125 in.) to release the casing load.
29. Remove the stiffening bar (RH 8032); fit the gasket and end cover. Fit and tighten the four setscrews adjacent to the two dowels.
30. Progressively tighten the six side cover retaining nuts previously released in Operation 28.
31. Rotate the pinion coupling flange to ensure that there are no tight spots or roughness of operation.

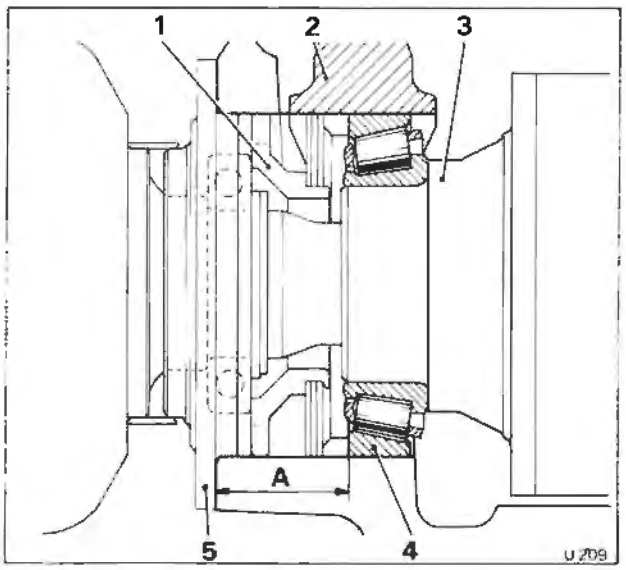

Fig. J10m Casing flange to bearing measurement
1 Belleville washer and spacer assembly
2 Bearing cap
3 Differential housing
4 Bearing
5 Side bearing housing

Final drive — To fit
Fit the final drive unit by reversing the removal procedure adopted, noting the following points.
1. Ensure that oil has not drained from the half-shaft trunnion joints. Each joint should contain 150 ml of lubricant (see Chapter D).
2. When connecting the universal joints ensure that the needle roller bearing caps are located correctly into the hub yokes before fitting the retaining caps and setscrews.
3. The propeller shaft and pinion flange faces must be clean and free from damage before assembly.
4. All bolts and setscrews should be torque tightened in accordance with the figures quoted in Chapter P.
5. After fitting the final drive unit check that the drain plug has been tightened. Remove the filler plug from the rear of the crossmember and fill the axle with one of the recommended lubricants (see Chapter D), up to the level of the plug, approximately 2,55 litres (4½ Imp. pints 5½ U.S. pints). Fit the filler plug together with a new washer.
Note
This operation should be carried out with the car standing in a level condition.
6. If Method 1 has been adopted the hydraulic systems must be bled as described in Chapter G, Part II Section G4m after assembly is complete.
7. If Method 2 has been adopted it is important that the securing bolts on the two upper frame tubes are released and then tightened to ensure that the tubes are unstressed, following the disturbance of the sub-frame assembly. This operation must be carried out with the final drive and four lower frame tubes fitted but prior to the 'jury bolts' being removed or any spring or strut load being applied to the sub-frame.

The suspension springs must only be released after all frame tube and torque arm securing bolts and setscrews have been torque tightened to the figures quoted in Chapter P. The small sub-frame dampers must also have been fitted.

Ensure that all frame tubes are correctly fitted as shown in Chapter H Part II Section H1m.
8. When fitting the exhaust tail pipes reference should be made to Chapter Q.
9. If the front engine mount stop has been released it must be re-set to give a clearance of between 1,524 mm. and 2,286 mm. (0.060 in. and 0.090 in.) between the

rubber face of the stop plate and the crossmember stop bracket.

10. Before starting the engine in order to pressurise the hydraulic system, switch on the ignition and move the gear change lever to the 'P' Park position. Switch off the ignition and remove the thermal cut-out from the fuse-board.

Pinion flange oil seal — To renew

The pinion flange oil seal may be renewed with the final drive unit in position.

1. Place the car on a ramp and securely chock the road wheels.
2. Remove the bolts and nuts securing the propeller shaft to the pinion flange.
3. Remove the bolts and nuts securing the propeller shaft front flange to the transmission output flange.

Ease the propeller shaft forward and downward sufficiently for the rear flange to be clear of the final drive pinion flange. It is not necessary to remove the propeller shaft completely.

4. Scribe correlation marks across the pinion face, coupling flange and transmission damper. Remove the pinion nut.
5. Using the hydraulic ram (RH 8017) and special extractor (RH 8470) remove the pinion flange.
6. Using a lever or simple extractor remove the oil seal from the pinion housing.
7. Fit a new oil seal, ensuring that it is fitted squarely, with the lip pointing inward and that the front face of the seal is 3,2 mm. (0.125 in.) below the front face of the housing. Smear the inner face of the seal with axle oil.
8. Clean and fit the pinion flange and damper ensuring that the correlation lines are in line. Failure to do this will result in pinion imbalance. Fit and torque tighten the nut to the figure quoted in Chapter P.
9. Connect both ends of the propeller shaft and torque tighten the nuts to the figure quoted in Chapter P.

Torque arm —To remove

1. Place the car on a ramp and securely chock the front road wheels.
2. Depressurise the hydraulic system as described in Chapter G Part II Section G2m.
3. Locate a hydraulic jack under the final drive centre case and raise the rear of the car. Position sill blocks beneath the car sills. Lower the hydraulic jack and allow the sill blocks to support the car.

The trailing arms should be supported either by the road wheels being in contact with the ramp or by placing support jacks beneath the arms.

4. Insert a spring compression tool (RH 9299) through both rear suspension springs. Compress the springs sufficiently to relieve all load from the trailing arms.
5. Support the final drive by placing a jack beneath the centre casing.
6. Remove one of the small dampers fitted to each end of the rear suspension crossmember. Insert a 'jury bolt' (RH 9575) and secure it in position with the two lock-nuts. Ensure load is not applied to the crossmember by the 'jury bolt'. Repeat the operation on the other end of the crossmember.

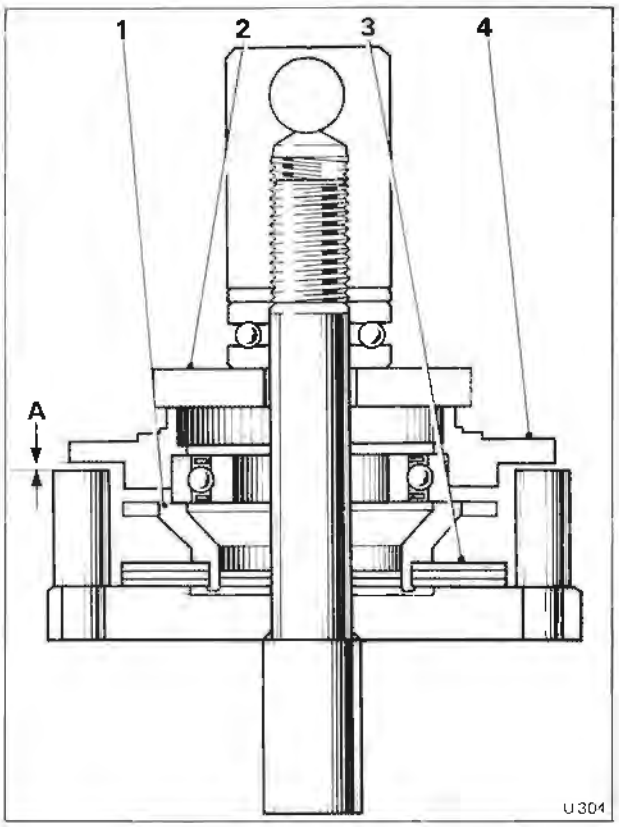

Fig. J11m Belleville washer setting

A	Measured gap
1	Distance piece
2	Tool (RH 9578)
3	Belleville washers
4	Final drive side housing

7. Remove the bolts securing the upper and lower frame tubes to the final drive crossmember on the torque arm side of the final drive.

Carefully note the positions of the tubes and to which side of the mounting bracket they are secured. Also the direction in which the bolts are fitted.

8. Remove the setscrews and bolts securing the torque arm to the final drive casing and suspension crossmember. Lower the torque arm from the car.

Torque arm — To fit

Fit the torque arm by reversing the procedure for removal noting the following points.

1. All bolts and setscrews should be torque tightened to the figures quoted in Chapter P.
2. Ensure that the frame tubes are fitted with the centre line of the tube in line with the mating face of the mounting bracket (see Chapter H Part II Fig. H19m.) and to the same side of the mounting bracket from which they were removed.
3. All frame tubes must be torque tightened and the crossmember dampers fitted prior to the suspension spring load being released and the suspension struts pressurised.

Printed in England
© Rolls-Royce Motors Limited 1979

Section J2m

Half-shafts

Printed in England

© Rolls-Royce Motors Limited 1979

Introduction

The half-shafts fitted to cars from serial number 50 001 are longer in length than those previously fitted. Under no circumstances should a short type of half-shaft be used as a replacement.

To enable the longer type of half-shaft to be identified a raised area 6,35 mm. (0.250 in.) wide has been added as shown in Figure J12m.

Note

On early cars from 50 001 the identification ring was not used and these shafts can be identified by length only.

Half-shaft assemblies complete with ball and trunnion joint, seal and universal joint are available as Service Exchange items.

To enable a half-shaft to be removed it is necessary to remove the rear hub and brake caliper assembly from the trailing arm.

Half-shaft — To remove

1. Drive the car onto a ramp and securely chock the front road wheels.
2. On the respective side, remove the wheel disc and loosen but do not remove the wheel nuts.
3. Using a hydraulic jack and hardwood block placed beneath the final drive casing, raise the rear of the car until the road wheel is clear of the ramp.
4. Position sill blocks beneath the car sill. Lower the hydraulic jack to allow the blocks to support the car. Support the trailing arm on a jack.
5. Remove the road wheel.
6. Depressurise the hydraulic system as described in Chapter G Part II Section G2m.
7. Remove the rear hub and caliper assembly as described in Section J4m.
8. Remove the six nuts securing the bearing housing to the side of the final drive casing, tap the housing with a nylon mallet to break the joint.
9. Withdraw the half-shaft trunnion joint and half-shaft from the final drive casing.

Note

When handling the half-shaft assembly, both ends should be supported. Do not carry the shaft holding one end only, place the shaft in an unsupported position or allow the trunnion body to hang downwards, otherwise oil may be lost through the small breather hole in the centre of the splined shaft.

10. After removal of the half-shaft assembly the final drive casing must be blanked off to prevent the ingress of foreign matter.

Half-shaft — To dismantle

1. Remove the circlip and washer retaining the ball and trunnion joint body to the side bearing housing. Remove the housing from the splined shaft.
2. Remove the drain plug from the joint body and drain the oil from the housing (each trunnion joint holds approximately 150 ml of lubricant).
3. Release the clips securing the convoluted seal to the joint body and half-shaft.
4. Position the joint body with the drain plug horizontal. Ease the seal over the edge of the body, and down the shaft. Carefully withdraw the shaft from the body; retain the buttons on the trunnion pin, during removal.
5. Remove the trunnion buttons, adjusting washers, bearing outer races and needle rollers from the trunnion pin (see Fig. J13m). Keep each assembly separate and note from which side of the pin they have been removed.
6. Whilst dismantled, the trunnion bearing assemblies should be lubricated and wrapped in greaseproof paper for protection.
7. If the outer universal joint is to be removed, refer to Universal joint — To remove.
8. Thoroughly clean and inspect all items for wear and damage. Also inspect the convoluted trunnion joint seal for serviceability and renew if necessary.

Ball and trunnion joint seal — To renew

1. Remove the half-shaft as described previously.
2. Carry out Operations 2 to 6 inclusive of Half-Shaft — To dismantle.
3. To press the trunnion pin out of the half-shaft equipment capable of exerting a pressure of up to 2362 kgf.sq.m. (15 tonf.sq.in.) is required.

   Heat must not be used for this operation.
4. Remove the pin and joint seal.

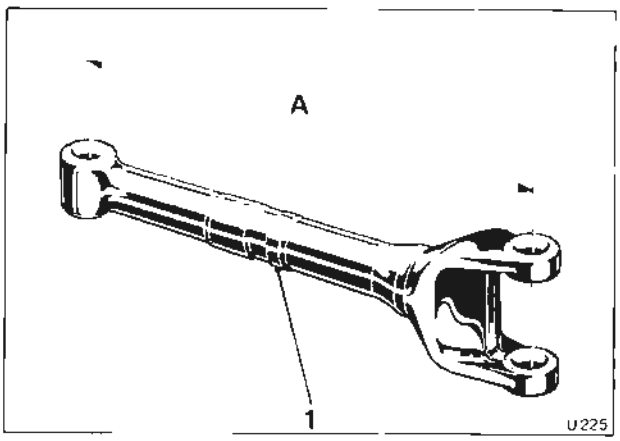

Fig. J12m Half-shaft identification

1 Identification band
A 403,86 mm. (15.900 in.)

5. Fit a new seal and press the trunnion pin into position.

The trunnion pin must be pressed in squarely and the length of pin which protrudes from each side must be equal to within 0,152 mm. (0.006 in.). Check the pins for scoring or damage after fitting.

If the original pin and the bore are in good condition and the minimum pressing load of 315 kgf.sq. m. (2.0 tonf. sq. in.) can be achieved, the original pin may be used again. If not it is recommended that a new trunnion pin is fitted.

6. When the trunnion pin and new seal have been fitted the half-shaft should be assembled as instructed under Half-shaft — To assemble.

Half-shaft — To assemble

When a new half-shaft is being used always ensure it is of the correct length (see Fig. J12m).

Assemble the half-shaft by reversing the procedure for removal noting the following points.

1. Thoroughly clean all components prior to assembly.
2. Assemble the universal joint into the half-shaft end yoke (see Universal joint — To fit).
3. Using a micrometer measure the length of the trunnion pin on each side of the half-shaft knuckle and note any difference in length. This difference should not be more than 0,152 mm. (0.006 in.) (see Operation 5 of Ball and trunnion joint seal — To renew).
4. Fit the trunnion buttons on to the trunnion pin, but at this stage do not fit the adjusting washers and trunnion bearings.

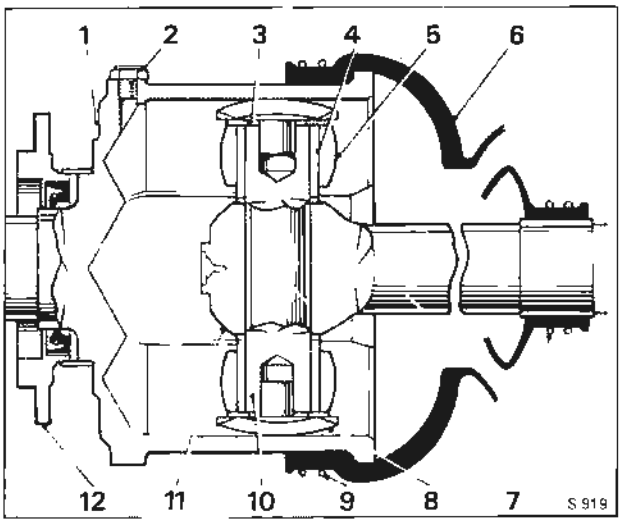

Fig. J13m Half-shaft ball and trunnion joint

1	Ball and trunnion joint body
2	Drain plug
3	Adjusting washer
4	Needle rollers
5	Needle roller race
6	Joint seal
7	Seal clip
8	Trunnion buttons
9	Seal clip
10	Trunnion pin
11	Half-shaft knuckle end
12	Final drive side housing

Insert the trunnion into the joint body and allow one button to rest against the body wall. Using feeler gauges measure the total gap between the other button and the body wall. This measurement gives the total amount of adjustment required. Any difference of pin lengths noted earlier should be taken into account when equally dividing the total adjustment required between the trunnion adjusting washers. For example, if pin measurements differ by 0,101 mm. (0.004 in.), half this amount should be added to the thickness of the adjusting washer fitted to the shorter side of the trunnion pin and subtracted from the washer thickness fitted to the long side. This will give a difference of 0,101 mm. (0.004 in.) in washer thickness and centralise the half-shaft in the body. Shim washers are available for this purpose in a range from 0,304 mm. to 0,584 mm. (0.012 in. to 0.023 in.) in 0,025 mm. (0.001 in.) increments.

5. Fit the inner washers and the needle roller assemblies to each side of the trunnion pin then, fit the trunnion buttons together with their correctly selected adjusting washers to the pin ends (see Fig. J13m).
6. Fit the correctly adjusted trunnion assembly into the joint body. Ease the joint seal over the body and tighten the two wire clips ensuring that the small end of the seal locates on the machined diameter of the shaft.
7. Fill the joint body with 150 ml. of the recommended lubricant (see Chapter D) and fit the filler plug.
8. Fit the half-shaft to the car as described under Half-shaft -- To fit.

Half-shaft - - To fit

Fit the half-shaft by reversing the procedure given for removal noting the following points.

1. If a service exchange shaft is being fitted, it will be supplied suitably blanked and protected. Ensure the half-shaft is of the correct length (see Fig. J12m).

Remove the protective covering from the joint body splines. Also remove the cover on the breather hole in the end of the splined shaft. All traces of protective material must be removed.

2. Remove the circlip and washer from behind the bearing housing on the old shaft and fit the housing, washer and circlip to the new shaft.

It is essential that the side bearing housings removed from the final drive assembly are fitted to the half-shafts, as the fitting of any other housing will result in an incorrectly adjusted final drive assembly.

3. Remove the drain plug from the trunnion joint body. Inject 150 ml. of recommended lubricant (see Chapter D) into the joint body and fit the plug.
4. Fit the half-shaft to the car. When fitting a right-hand half-shaft, care must be taken to ensure that the belleville washers and distance piece are retained in position. Also ensure that the belleville washers are fitted with the concave side of the washers facing the crown wheel assembly.
5. When fitting the half-shaft assembly to the final drive casing it should be noted that the bearing housing has one off-set hole and can only be fitted in one position. Therefore, the holes should be aligned as the shaft is inserted into the final drive unit.
6. Fit the rear hub and caliper assembly as described in Section J4m.

7. Ensure that the needle bearing caps are located correctly in the hub yoke. Fit the bearing cap clamps and torque tighten the four setscrews (see Chapter P).
8. Fit the road wheel and nuts, remove the sill beams and blocks from beneath the car, tighten the wheel nuts and fit the disc.
9. All nuts and setscrews should be torque tightened in accordance with the figures quoted in Chapter P.
10. When the half-shaft has been fitted to the car and with the car in its normal standing height position, inspect the seal to ensure that the seal convolutions are not 'crimped' or strained. If they are the position of the seal should be adjusted on the shaft.
11. Bleed the hydraulic system as described in Chapter G Part II Section G4m.

Universal joint — To remove

1. Remove the half-shaft as described under Half-shaft — To remove.
2. Remove any paint or foreign matter from around the circlips in the universal joint yoke eyes and remove the circlips.

Note

Due to circlips of different thickness having been fitted, care should be taken to ensure that the circlips are fitted to their original locations. If new circlips are fitted they should be of the same thickness as those they replace.

3. Hold the shaft with both ends supported to avoid excessive strain being put on the convoluted seal. Using a nylon mallet shock drive the races from the yoke eyes.

Universal joint — To fit

1. Ensure that the bores in the yokes are clean and in good condition; lightly grease the needle rollers and locate them in their housings. Each bearing housing is fitted with 38 needle roller bearings.
2. Fit the cross-piece, minus the needle roller and housing assemblies, into the yoke eyes. Hold the cross-piece central and press the bearing housing assemblies into the yoke bores sufficiently to enable the circlips to be fitted. Care should be taken not to damage the joint seals during this operation.
3. Fit the circlips and check the free movement of the universal joint.
4. Grease the universal joint at the nipple provided.

Output shaft oil seal — To renew

The oil seals on the ball and trunnion joint shaft are located in the housings, on each side of the final drive unit and can be renewed with the final drive in position.

1. Remove the half-shaft assembly as described under Half-shaft — To remove.
2. Remove the circlip and washer located on the ball and trunnion joint shaft behind the bearing housing and remove the housing from the shaft.
3. Remove the seal from the housing.
4. Fit a new seal, ensuring that it is fitted squarely in its locating bore and with the seal lip pointing inwards towards the bearing. Smear the inner face of the seal with axle oil.
5. Fit the housing onto the shaft, place the washer in position behind the bearing and fit the circlip, ensure it is correctly located in the groove.
6. Fit the half-shaft as described under Half-shaft — To fit.

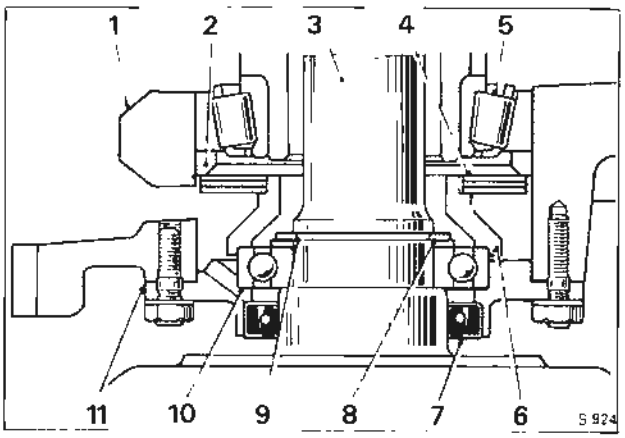

Fig. J14m Final drive side housing

1	Differential housing bearing cap
2	Adjusting washer
3	Ball and trunnion joint splined shaft
4	Belleville washers
5	Taper roller bearing
6	Distance piece
7	Ball and trunnion shaft oil seal
8	Retaining washer
9	Retaining circlip
10	Bearing
11	Final drive side housing

Output shaft bearing — To renew

1. Remove the half-shaft assembly as described under Half-shaft — To remove.
2. Remove the circlip and washer from the ball and trunnion joint shaft and remove the housing from the shaft.
3. Left-hand housings have a circlip fitted to retain the bearing. Remove this circlip.
4. Remove the bearing from the housing using a mandrel or drift, taking care not to damage the oil seal.
5. Clean and inspect the housing bore and lightly stone out any damage marks or burrs.
6. Fit a new bearing ensuring that it is fitted squarely in the bore and up to its abutment face.
7. On a left-hand housing fit the circlip and locate it correctly in the retaining groove.
8. Fit the housing to the ball and trunnion joint shaft, fit the washer and circlip.
9. Fit the half-shaft assembly to the car as described under Half-shaft — To fit.

Printed in England
© Rolls-Royce Motors Limited 1979

Section J3m

Final drive crossmember

The final drive crossmember fitted to cars from serial number 50 001 is an integral part of the rear sub-frame assembly.

The sub-frame which consists of the rear suspension crossmember, six frame tubes and the final drive crossmember, is jig assembled. It is adjusted together with the trailing arms, final drive unit and torque arm during manufacture.

Although certain components can be removed from the assembly as individual items, under no circumstances should the final drive crossmember only be removed from the car.

If removal of the final drive crossmember or renewal of the mounts is necessary, reference should be made to Chapter H Part II Sections H1m and H2m respectively prior to work being commenced.

Printed in England
© Rolls-Royce Motors Limited 1979
July 1979
TSD 4200

Section J4m

Rear hubs

Hub unit – To remove

1. Position the car on a ramp and securely chock the front road wheels.
2. Remove the rear wheel disc. Loosen but do not remove the wheel retaining nuts.
3. Using a hydraulic jack positioned beneath the final drive casing, raise the rear of the car until the road wheels are clear of the ramp.
4. Position sill blocks beneath the body sills. Lower the hydraulic jack and allow the blocks to support the car body. Support the trailing arms with screw jacks.
5. Remove the rear road wheel.
6. Depressurise the hydraulic system as described in Chapter G Part II Section G2m. Depressurisation of the suspension struts is not necessary.
7. Disconnect the parking brake actuation rod from the brake caliper.
8. Disconnect the two pressure feed pipes from the brake caliper. Fit blanks to the pipe ends and caliper ports.
9. Disconnect and remove the brake caliper bridge pipe. Fit blanks to the pipe ends and caliper ports.
10. Remove the setscrews securing the bearing caps to the yoke at the half-shaft universal joint. Separate the

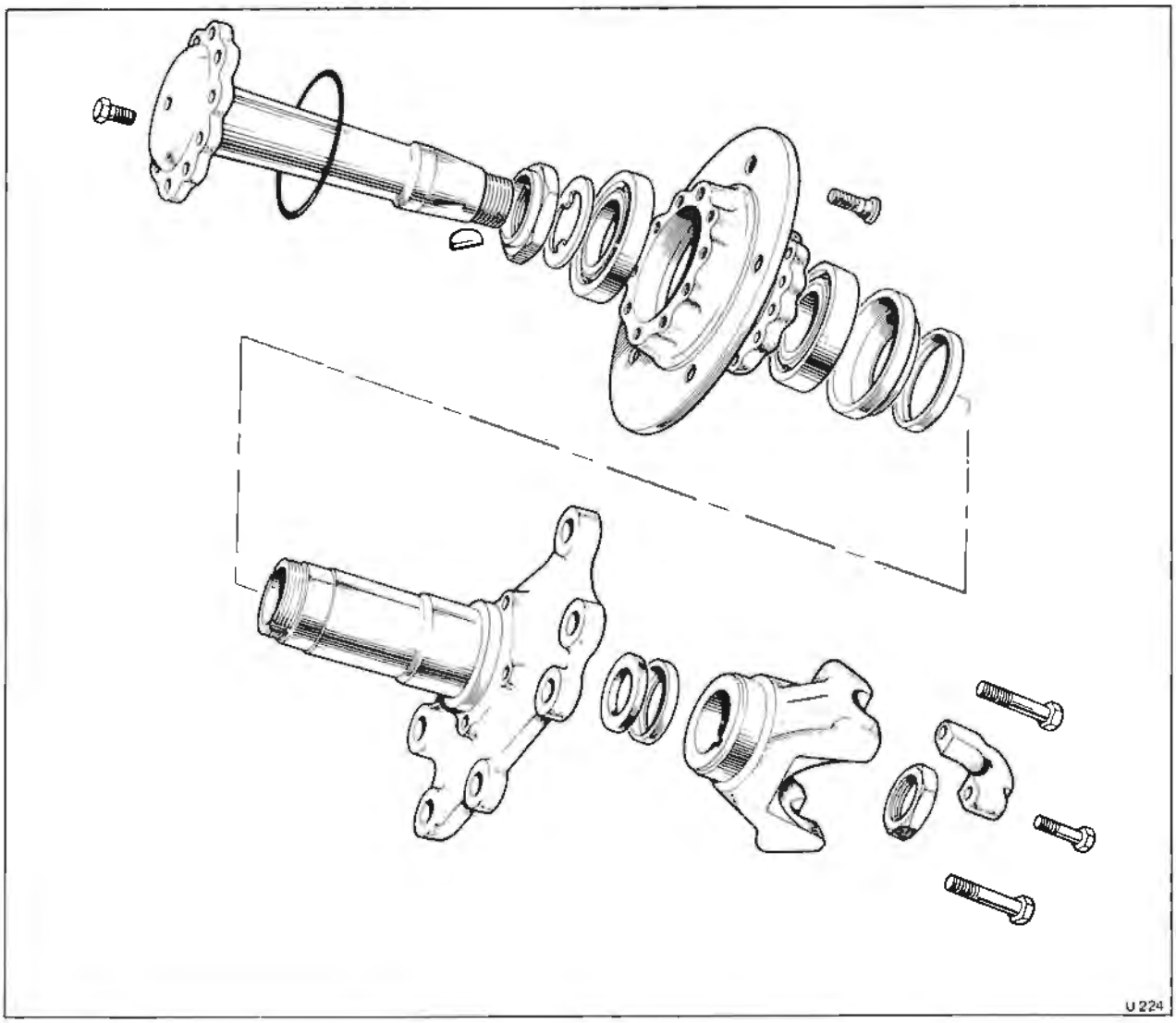

Fig. J15m Rear hub

Printed in England

© Rolls-Royce Motors Limited 1982

universal joint from the yoke by easing the half-shaft inwards towards the final drive. Care should be taken to retain the bearing caps on the universal joint during removal.

11. Tape the needle roller bearing caps in position on the universal joint. Alternatively remove them noting from which side of the joint they have been removed.

12. If the rear hub assembly is to be dismantled loosen the two setscrews securing the brake caliper to the hub yoke.

13. Remove the two lower setscrews securing the stub axle flange to the trailing arm (see Fig. J16m).

14. Support the rear hub and brake caliper assembly. Remove the two upper setscrews securing the stub axle to the trailing arm.

15. Carefully withdraw the rear hub and brake caliper assembly from the trailing arm and remove it from the car.

Hub unit – To dismantle

1. Remove the rear hub and brake caliper assembly as described previously.

2. Remove the setscrews securing the brake caliper to the hub yoke.

3. Carefully slide the brake caliper off the brake disc. Fit a distance piece between the brake pads to ensure the caliper pistons are retained in their bores.

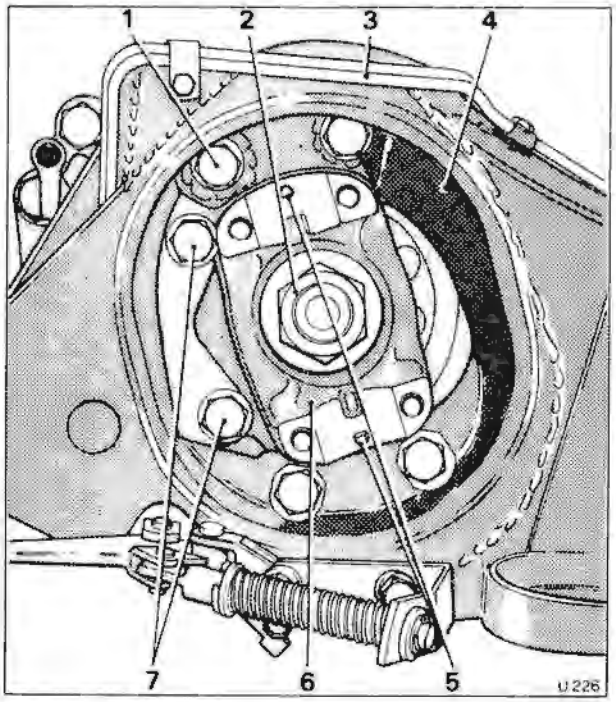

Fig. J16m Rear hub and brake caliper mounting

1 Hub mounting bolts (4)
2 Drive shaft retaining nut
3 Hydraulic brake pipes
4 Trailing arm
5 Universal joint location dowels
6 Yoke
7 Brake caliper mounting bolts

4. Remove the large nut securing the yoke to the hub drive-shaft (see Fig. J16m).

5. Using the extractor tools (RH 9004 and RH 9005), remove the yoke from the tapered hub drive-shaft. Collect the Woodruff key.

6. Remove the setscrews securing the outer flange of the drive shaft to the hub. Withdraw the drive-shaft from the hollow stub axle.

7. Unlock and remove the shrouded nut and the key washer from the stub axle.

8 Withdraw the hub complete with bearings from the stub axle; collect the chamfered distance piece.

9. Remove the outer bearing inner race. Using a soft metal drift, drive out the inner bearing together with the grease retainer.

10. Drive out the outer bearing track from the hub.

11. Remove the retainer and felt seal from the stub axle counterbore.

12. With the hub dismantled inspect the brake disc and caliper pads for wear or damage. If it is necessary to remove the brake disc, remove the securing setscrews and withdraw the disc from the hub.

13. Thoroughly clean all hub components and inspect for wear and damage.

Hub unit – To assemble

1. Press new bearing outer races into the hub, smaller end of the taper leading. Ensure that the leading faces abut the shoulders of the hub counterbore.

2. Pack the hub with approximately 71 gm. (2 oz.) of the approved grease (see Chapter D Lubricants). The grease must be smeared on the inner wall of the hub to ensure that when the hub is fitted to the stub axle the grease remains in position.

3. Lubricate the new inner races with the approved grease and fit them to their respective outer races.

4. With the inner bearing in position, press the Acme threaded grease retainer into position. Ensure that the leading edge abuts the bearing outer race.

It is essential that the correct hand of grease retainer is fitted to the respective hubs. The grease retainers can be identified by the 'Acme' thread direction in the bore of the retainer. The right-hand (off-side) hub has a right-hand 'Acme' thread, the left-hand (near-side) hub has a left-hand 'Acme' thread.

Note

When renewing the bearing of more than one hub at the same time, always retain the inner race and roller cage together with the outer race. The inner and outer races are a matched set and should not be fitted separately.

Hub unit – To fit

1. Fit a new felt seal and retainer into the stub axle. Apply a small quantity of approved grease (see Chapter D) to the felt seal.

2. Fit the distance piece, chamfered edge leading, onto the stub axle to abut the shoulder.

3. Position the hub on the stub axle and fit the hardened key washer and new shrouded nut.

4. Tighten the nut sufficiently to remove any bearing end-float. Using a dial test indicator mounted adjacent to the brake disc measure the run-out of the disc at the

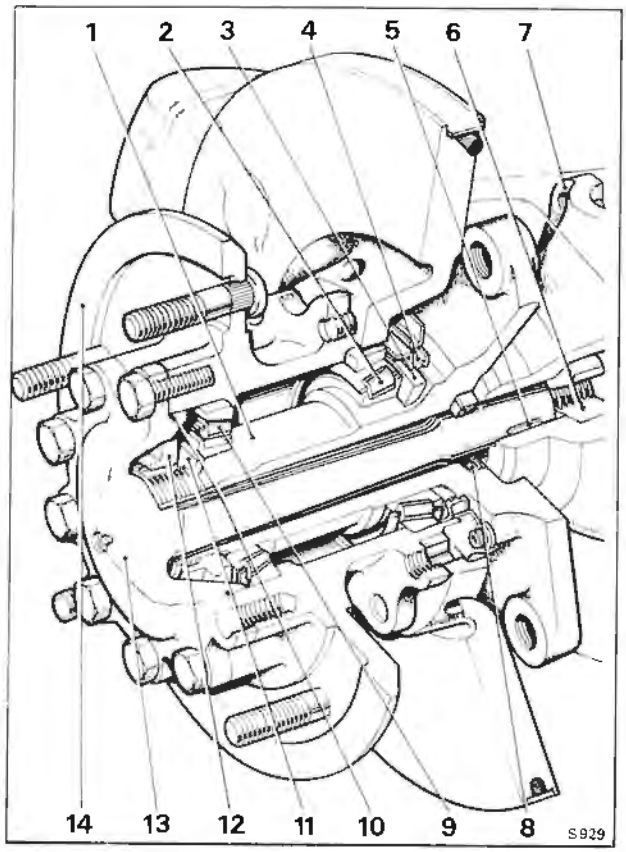

Fig. J17m Rear hub

1	Stub axle
2	Inner taper roller bearing
3	Distance piece
4	Acme thread seal
5	Woodruff key
6	Nut
7	Yoke
8	Felt seal and retainer
9	Outer taper roller bearing
10	Seal
11	Keyed adjusting washer
12	Shrouded nut
13	Drive-shaft
14	Hub

maximum possible radius.

The run-out must not exceed 0,178 mm. (0.007 in.) total indicator reading as this is a measure of the stack tolerance of all the components. If the run-out exceeds this figure, it will be necessary to dismantle the hub and brake disc to investigate the cause.

5. After checking the run-out slacken the shrouded nut. Place a feeler gauge between the outer bearing and the key washer. Tighten the nut sufficiently to lightly grip the feeler gauge to obtain a bearing end-float of between 0,05 mm. and 0,10 mm. (0.002 in. and 0.004 in.), when the feeler gauge is removed.

Alternatively, the required end-float can be obtained by use of suitable dial test indicator equipment secured to the stub axle.

Continuous rotation of the hub is essential during this operation to ensure that the taper rollers seat correctly in the outer races.

6. Peen the shroud of the nut to locate into the grooves of the stub axle; remove the feeler gauge or dial test indicator.

Note

Incorrect setting i.e. exerting a load on the bearings or giving excessive end-float, will promote premature bearing wear. The remaining operations for fitting the rear hub unit are a careful reversal of the procedure given for removal and dismantling, noting the following operations.

7. Fit a new rubber 'O' ring onto the hub drive-shaft, apply a small quantity of grease to the ring before fitting.

8. Fit the Woodruff key to the hub drive-shaft taper before fitting the hub yoke.

9. Apply Rocol MTS 1000 grease or equivalent to the threads and abutment face of the yoke retaining nut and torque tighten to the figure quoted in Chapter P using torque spanner (RH 8014) and socket (RH 8026).

10. When fitting the half-shaft universal joint to the hub yoke ensure that the bearing caps seat correctly in the yoke and that the bearing cap setscrews are torque tightened (see Chapter P).

11. When fitting the brake feed pipes and parking brake linkage refer to Chapter G Part II for information regarding bleeding procedure and precautions to be taken.

12. Check the adjustment and operation of the parking brake as described in Chapter G Part II.

13. Fit the road wheel and remove the supports beneath the body and trailing arms.

14. Tighten the wheel nuts and fit the wheel disc.

Printed in England

© Rolls-Royce Motors Limited 1982

Section J5m

Dimensional data

Final drive unit	
Backlash – pinion to crown wheel	Etched on crown wheel
Backlash – differential housing pinions	0,0762 mm. (0.003 in.)
End float – differential housing pinions	Nil
Crown wheel run-out (maximum)	0,05 mm. (0.002 in.)
Differential housing – trunnion diameters	19,036 mm. - 19,05 mm. (0.7497 in. - 0.750 in.)
Differential housing pinions – bore diameters	19,05 mm. - 19,075 mm. 0.7505 in. - 0.751 in.
Differential housing bevel pinion gear – bearing diameter	44,272 mm. - 44,297 mm. (1.743 in. - 1.744 in.)
Differential housing bevel pinion gear bore diameter	44,450 mm. - 44,475 mm. (1.750 in. - 1.751 in.)
Differential housing and end cap – bearing locating diameters	50,85 mm. - 50,863 mm. (2.002 in. - 2.0025 in.) 66,732 mm. - 66,738 mm. (2.62725 in. - 2.6275 in.)
Differential housing bearings – bore diameters	50,8 mm. - 50,812 mm. (2.000 in. - 2.0005 in.) 66,675 mm. - 66,687 mm. (2.625 in. - 2.6255 in.)
Differential housing bearings – outside diameters	88,9 mm. - 88,925 mm. (3.500 in. - 3.501 in.) 107,950 mm. - 107,975 mm. (4.250 in. - 4.251 in.)
Final drive casing – differential housing bearing locating bores	88,925 mm. - 88,938 mm. (3.501 in. - 3.5015 in.) 107,975 mm. - 108,0 mm. (4.251 in. - 4.252 in.)
Final drive casing – pinion housing locating diameters	105,410 mm. - 105,422 mm. (4.150 in. - 4.1505 in.) 105,715 mm. - 105,73 mm. (4.162 in. - 4.1625 in.)
Pinion housing – locating diameters	105,410 mm. - 105,422 mm. (4.150 in. - 4.1505 in.) 105,752 mm. - 105,765 mm. (4.1635 in. - 4.164 in.)
Pinion shaft – bearing locating diameters	34,956 mm. - 34,963 mm. (1.37625 in. - 1.3765 in.) 44,581 mm. - 44,588 mm. (1.75125 in. - 1.7515 in.)
Pinion bearings – bore diameters	34,925 mm. - 34,937 mm. (1.375 in. - 1.3755 in.) 44,450 mm. - 44,462 mm. (1.750 in. - 1.7505 in.)
Pinion housing – pinion bearing locating diameters	72,294 mm. - 72,319 mm. (2.8423 in. - 2.8433 in.) 95,199 mm. - 95,224 mm. (3.748 in. - 3.749 in.)
Pinion bearings – outside diameters	72,232 mm. - 72,257 mm. (2.8438 in. - 2.8448 in.) 95,250 mm. - 95,275 mm. (3.750 in. - 3.751 in.)
Pinion - splined diameter	40,546 mm. - 40,609 mm. (1.5963 in. - 1.5988 in.) over 4,000 mm. (0.1575 in.) diameter rollers
Pinion – nose bearing locating diameter	38,524 mm. - 38,534 mm. (1.5167 in. - 1.5172 in.)
Final drive casing – pinion nose bearing bore diameter	61,981 mm. - 61,986 mm. (2.4402 in. - 2.4404 in.)
Pinion nose bearing – outside diameter	61,997 mm. - 61,999 mm. (2.44045 in. - 2.44095 in.)
Pinion nose bearing – running clearance	0.027 mm. - 0.038 mm. (0.0005 in. - 0.0015 in.)
Final drive half-shafts	
Side housing – bearing locating bore	66,649 mm. - 66,672 mm. (2.6242 in. - 2.62445 in.)
Bearing – side housing – outside diameter	67,056 mm. - 67,068 mm. (2.6240 in. - 2.6245 in.)

Printed in England
© Rolls-Royce Motors Limited 1979

Bearing--side housing -- bore diameter	37,863 mm. - 38,105 mm. (1.4997 in. - 1.5002 in.)
Ball and trunnion joint shaft--bearing diameter	38,093 mm. - 38,10 mm. (1.49975 in. - 1.500 in.)
Ball and trunnion joint spline diameter	41,846 mm. - 41,859 mm. (1.6475 in. - 1.6481 in.) over 3,9578 mm. (0.1512 in.) diameter rollers
Ball and trunnion joint — trunnion pin bore	24,780 mm. - 24,775 mm. (0.9756 in. - 0.9754 in.)
Ball and trunnion joint — trunnion pin diameter	24,838 mm. - 24,889 mm. (0.97745 in. - 0.97765 in.)
Trunnion pin — minimum pressing load	315 kgf. sq.m, 2 tonsf. sq. in.
Ball and trunnion joint — spherical ball diameter	44,424 mm. - 44,437 mm. (1.7490 in. - 1.7495 in.)
Ball and trunnion joint — spherical ball bore	30,832 mm. - 30,835 mm. (1.2135 in. - 1.2140 in.)
Needle rollers (29 off)— diameter	2,997 mm. - 3,002 mm. (0.1180 in. - 0.1182 in.)
Ball and trunnion joint — spherical ball locating bores	44,450 mm. - 44,475 mm. (1.750 in. - 1.751 in.)

Section J6m

Workshop tools

RH 8014	Torque wrench -- 0 lbf.ft to 600 lbf.ft Hub yoke nut
RH 8016	Extractor Beam When used in conjunction with RH 8017, RH 8020, RH 8021 and RH 8022, the extractor beam can be used to remove the rear tapered roller bearing from the final drive pinion
RH 8017	Hydraulic Ram To be used in conjunction with RH 8016, RH 8020, RH 8021 and RH 8022 as detailed above
RH 8020	Separator See RH 8017 for uses
RH 8022	Pressure Pads See RH 8017 for uses
RH 8026	Socket head 1. 11/16 A/F. To be used in conjunction with RH 8014
RH 8032	Stiffening bar – Final drive casing
RH 8307	Converter – Torque Spanner Converts the 19 mm (0.75 in.) square drive of the torque spanner RH 8014 to 25,4 mm (1.0 in.) square drive
RH 8308	Applicator – Rear drive shaft rubber seal
RH 8457	Assembly Tool – Pinion coupling flange
RH 8470	Extractor – Pinion coupling flange To be used in conjunction with RH 8017
RH 9004	Extractor – Rear hub end yoke To be used in conjunction with RH 9005
RH 9005	Hydraulic Ram To be used in conjunction with RH 9004
RH 9575	Jury Bolt – Final drive and torque arm removal
RH 9578	Pre-loading jig – Belleville washers – Final drive right-hand side housing

Printed in England

© Rolls-Royce Motors Limited 1979



Workshop Manual

Rolls-Royce Silver Shadow II
Rolls-Royce Silver Wraith II
Rolls-Royce Corniche
Rolls-Royce Camargue
Bentley T2
Bentley Corniche

From car serial number 30001

Volume 2

Printed in England

© Rolls-Royce Motors Limited 1977

T.S.D. 4200 S 168 February 1977

Printed and Published by

Rolls-Royce Motors Limited
Crewe CW1 3PL
Cheshire
England

The information given in this document is based upon the latest knowledge available to Rolls-Royce Motors Limited. However, in view of the Company's continuous programme of product improvement and development, the information may have become out of date by the time you read this publication and reference should be made to the Company's service bulletins.

© Rolls-Royce Motors Limited 1977

Chapter K

Fuel system

Section

K1 Introduction
K2 Fuel tank assembly
K3 Fuel pumps
K4 Fuel lines and Ancillary equipment
K5 Carburetters and Automatic choke
K6 Air intake system
K7 Throttle linkage
K8 Fault diagnosis
K9 Workshop tools

Corniche and Camargue cars fitted with a Solex 4A1 carburetter

For identification details of cars in connection with the ignition timing and modifications for low grade fuel (referred to in Chapter M - Ignition timing) see Figure K66.

Fuel Injection system

For details of the fuel injection system refer to the appropriate model year section of Chapter U, Emission control system.

Printed in England

© Rolls-Royce Motors Limited 1981

December 1981

T.S.D. 4200

Chapter K

Issue record sheet 1

April 1983

The dates quoted below refer to the issue date of individual pages within this chapter.

Section	K1	K2	K3	K4	K5	K6	K7	K8	K9
Page No.									
1	Dec 79	Aug 78	Aug 78	Nov 78	Dec 78	Dec 78	Dec 78	Dec 78	Dec 78
2	Dec 79	Aug 78	Aug 78	Nov 78	Dec 78	Dec 78	Dec 78	Dec 78	
3	Dec 79	Apr 83	Aug 78	Nov 78	Dec 78	Dec 78	Dec 78	Dec 78	
4		Apr 83	Aug 78		Dec 78		Dec 78	Dec 78	
5		Apr 83	Aug 78		Dec 78		Dec 78	Dec 78	
6			Aug 78		Dec 78		Dec 78		
7			Aug 78		Dec 78		Apr 80		
8			Aug 78		Dec 78				
9			Aug 78		Dec 78				
10			Aug 78		Dec 78				
11			Aug 78		Dec 78				
12			Aug 78		Dec 78				
13			Aug 78		Dec 78				
14			Aug 78		Dec 78				
15					Dec 78				
16					Dec 78				
17					Nov 79				
18					Nov 79				
19					Dec 81				
20					Dec 81				
21					Dec 78				
22					Dec 78				
23					Dec 78				
24					Dec 78				
25					Dec 78				
26					Dec 78				
27					Dec 78				
28					Dec 78				
29					Dec 78				
30					Dec 78				
31					Dec 78				
32					Dec 78				
33					Dec 78				
34					Dec 78				
35					Dec 78				
36					Dec 78				
37					Dec 78				
38					Dec 78				
39					Dec 78				
40					Dec 78				
41					Dec 78				
42									
43									
44									
45									
46									
47									
48									

Printed in England

© Rolls-Royce Motors Limited 1983

T.S.D. 4200

Section K1

Introduction

The fuel systems fitted to these cars are basically similar in design, irrespective of the vehicle's intended domicile and a large number of components are interchangeable. A detailed inspection of the numerous build specifications is illustrated in Figure K1.

For information relating to the fuel evaporative emission control system, refer to the appropriate section of Chapter U.

Before draining the fuel system refer to Chapter A - Precautions for information relating to this exercise.

Fuel tank
The fuel tank is located either beneath the luggage compartment floor, or on cars destined for U.S.A. and Canada, between the rear seat and luggage compartment.

It is most important that only the correct type and grade of fuel is used when adding fuel to the tank and reference should be made to the table below.

Country	Fuel
Australia	97 octane (Min.)
Japan	88 RON (Min.) Unleaded
U.S.A. and Canada	91 octane (Min.) Unleaded
Cars destined for all other countries	97 octane (Min.) 4 star where B.S. 4040 is applicable

Warning
Do not add cleaning agents to the fuel.

Fuel filter (main)
The main fuel filter is located on either the centre crossmember or below the forward edge of the luggage compartment floor dependent upon the specification of the vehicle.

At the intervals specified in the service schedules the fuel filter element should be discarded and a new one fitted.

Fuel pump
Either a twin S.U. fuel pump assembly or a Pierburg fuel pump is fitted dependent upon the vehicle specification.

The fuel pump will only operate either when the engine is being cranked by the starter motor or when there is engine oil pressure.

Check valve
The valve which is fitted to cars destined for Canada, Japan and U.S.A. is situated adjacent to the centre crossmember and allows fuel to pass along the feed line only when the pump is operating.

The check valve seals the fuel feed line in the event of vehicle rollover.

Fuel cooler
The fuel cooler is located adjacent to the refrigeration compressor; the refrigerant of the air conditioning system is used to cool the fuel before it enters the carburetters. A fuel cooler is fitted to cars destined for Canada, Japan and U.S.A.

Carburetter(s)
The carburetter(s) are fitted on top of the inlet manifold assembly.

Two different carburetter assemblies are used depending upon the vehicle model and intended domicile.

Twin S.U. HIF7 (Horizontal Integral Float Chamber) side draught constant depression carburetters with 4,76 cm. (1.875 in.) choke bores are fitted to the majority of the models.

The only exceptions are the Corniche and Camargue models produced for countries other than Australia, Canada, Japan and U.S.A. These cars are fitted with a Solex 4A1 carburetter which is a four barrel down draught type with mixing chambers.

Carburetter fuel filters
Auxiliary fuel filters are fitted to the carburetter assemblies.

On the twin S.U.HIF7 assemblies a paper filter element is fitted into a small housing on the side of each carburetter.

The Solex 4A1 carburetter has a spring loaded nylon filter fitted into the carburetter fuel inlet pipe.

At the mileages specified in the service schedules the paper filters (S.U.HIF7) should be discarded and new filter elements fitted. The nylon filter (Solex 4A1) should be cleaned by blowing compressed air through the assembly.

Fuel recirculation valve
A valve is fitted into the fuel return line on cars destined for Canada, Japan and U.S.A. (i.e. those cars fitted with fuel recirculation systems). The flow of fuel from 'A' bank carburetter is restricted

Printed in England
© Rolls-Royce Motors Limited 1979
December 1979
TSD 4200

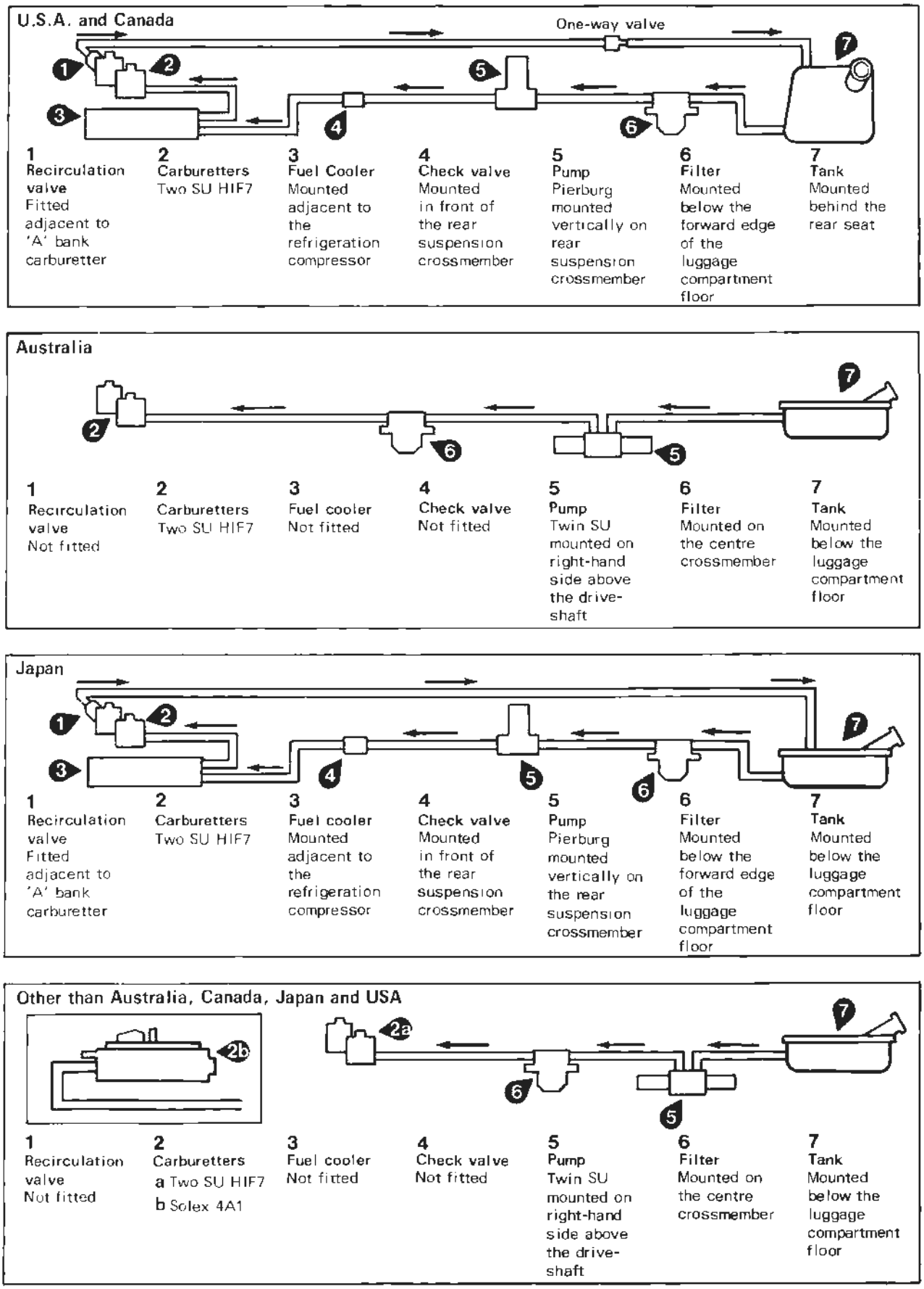

Fig. K1 Fuel systems

at the pipe fitting by a small drilling, this restriction to the flow of fuel returning to the fuel tank is the recirculation valve and is used to maintain a predetermined pressure in the fuel feed side of the system.

Float chamber drain valve
On cars equipped with twin S.U.HIF7 carburetters a float chamber drain valve is fitted at the front of the engine, adjacent to the oil filter. This valve is connected to the fuel receiver which is part of the mixture weakening device.

If flooding occurs the head of fuel in the receiver is sufficient to open the drain valve thus preventing engine stalling if the float chamber needle valves stick.

Non-return valve
On cars destined for U.S.A. and Canada a one-way valve is incorporated into the return line to prevent the 'back-flow' of fuel.

Air intake system
On cars fitted with S.U.HIF7 carburetters a temperature controlled air intake system is used. A vacuum operated blending valve attached to the air cleaner assembly is controlled by a thermal sensor in the air intake. This valve blends hot air from a pick-up scoop adjacent to the exhaust manifold with cold air from under the front wing, thus within the limitations of the system, maintaining the intake air at a constant temperature as it enters the carburetters.

Automatic choke
All cars are fitted with an automatic choke.

On cars fitted with twin S.U.HIF7 carburetters an automatic (bi-metal operated) strangler choke butterfly valve controlled by hot air from a stove pipe in the exhaust manifold, is used.

On cars fitted with the Solex 4A1 carburetter operation of the choke is achieved by the action of a bi-metal coil attached to the choke butterfly valves. The bi-metal coil is heated by an electrical heater within the bi-metal housing. Engine coolant keeps the bi-metal coil hot during 'hot soak' conditions.

Printed in England
© Rolls-Royce Motors Limited 1979
December 1979
T.S.D. 4200

Section K2

Fuel tank assembly

Printed in England
© Rolls-Royce Motors Limited 1978

Cars other than those destined for U.S.A. and Canada

The fuel tank is situated beneath the luggage compartment floor.

Included in the main fuel tank is a small expansion tank (see Fig. K2) of approximately 3,12 litres (5.5 Imp. pt - 6.7 U.S. pints) capacity. The expansion tank inhibits complete filling of the main fuel tank and provides additional fuel expansion volume to contend with extreme temperature conditions.

When the car is being filled with fuel, the main fuel tank (without an expansion tank) could normally be completely filled, leaving only the filler neck, vent connector pipes and fuel trap assembly to accommodate the expansion of the fuel. An expansion tank is therefore situated in the upper part of the main fuel tank and as the fuel level rises above the lower part of the expansion tank it flows inside through two small holes in the base. Two additional holes in the top of the expansion tank allow air to escape.

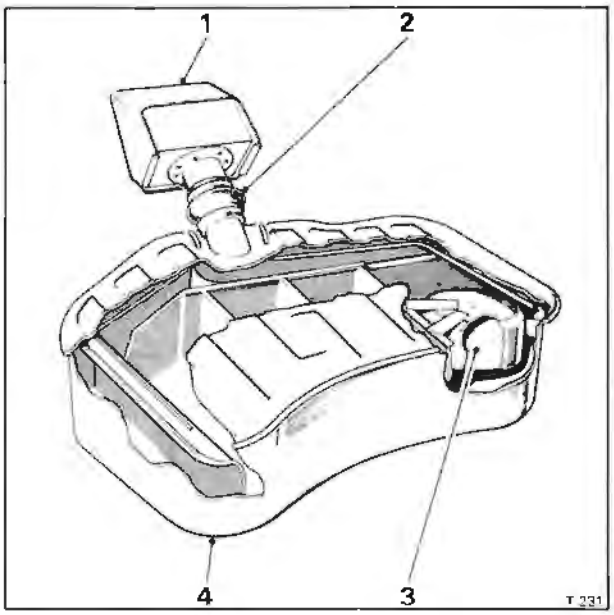

Fig. K2 **Fuel tank assembly (Other than U.S.A. and Canada)**
1 Filler box
2 Filler neck
3 Expansion tank and overfill limiter
4 Fuel tank

Fuel tank - To remove

1. Carry out the necessary workshop safety precautions.
2. Disconnect the battery.
3. Either drain or siphon the fuel from the tank.
4. Remove the carpet and underlay from the luggage compartment floor to reveal the fuel tank (see Fig. K3).
5. Unscrew the four screws securing the circular metal cover over the float assembly (see Fig. K3); withdraw the cover.
6. Disconnect the three electrical leads from the float assembly (see Fig. K4); tape the loom away from the vicinity of the fuel tank.
7. Using the special pliers (RH 8090) remove the steel clip from the rubber hose situated one on either side of the fuel tank filler (see Fig. K5).
8. Unscrew the worm drive clips securing the convoluted rubber filler hose to the filler box and tank filler connections. Detach the convoluted hose from the fuel tank and blank off both open ends of the connection.
9. From under the car unscrew the adapter(s) securing the fuel pipe(s) to the fuel tank; blank off the open ends of the connection.
10. From inside the luggage compartment, unscrew the $\frac{7}{16}$ in. A/F setscrews situated around the fuel tank.

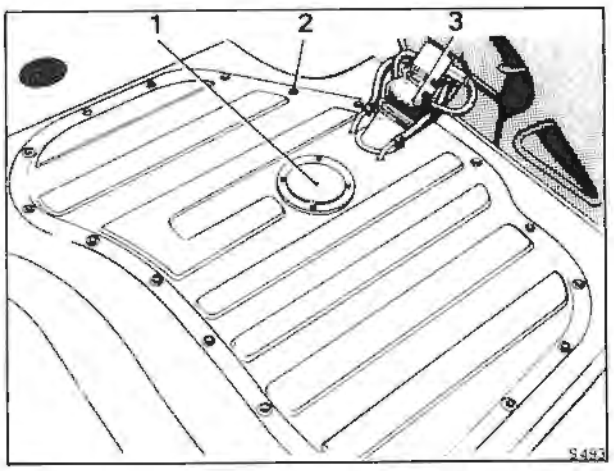

Fig. K3 **Fuel tank installation**
1 Float assembly cover
2 Fuel tank securing setscrews
3 Fuel filler assembly

August 1978
T.S.D. 4200

11. Carefully 'break' the seal between the fuel tank and the luggage compartment.
12. Withdraw the fuel tank by lifting it out through the luggage compartment.

Fuel tank - To fit
Fit the fuel tank assembly by reversing the procedure given for removal, noting the following points.
1. Apply a sealant such as Glasticon to the luggage compartment floor around the area of the fuel tank securing setscrew holes (this area is used for seating the lip of the fuel tank).

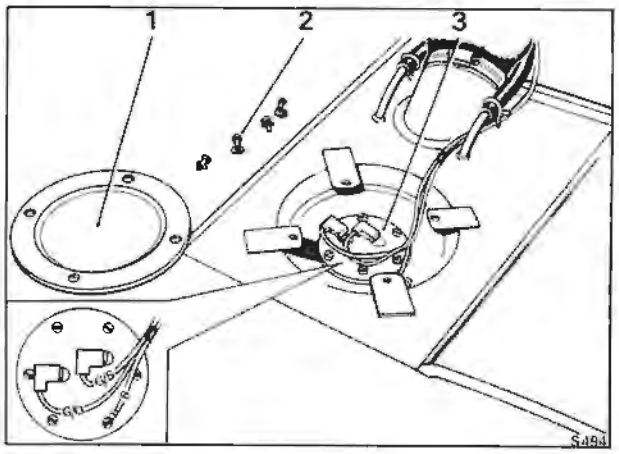

Fig. K4 Float assembly
1 Cover
2 Cover securing screws
3 Float assembly

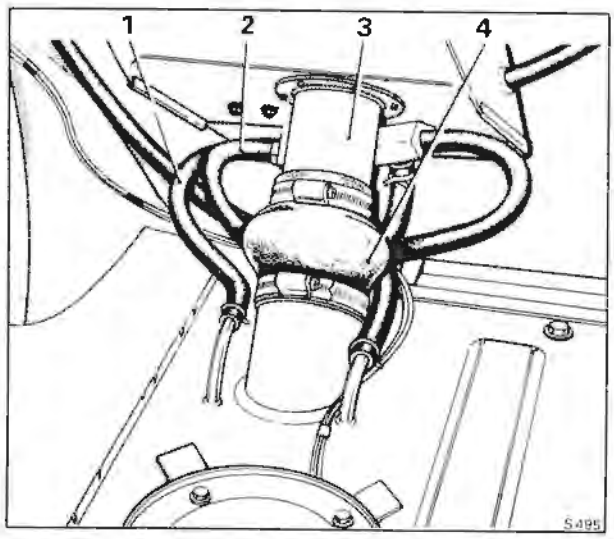

Fig. K5 Fuel filler assembly
1 Vent - tank to junction block
2 Vent - filler to junction block
3 Metal filler pipe
4 Convoluted filler hose

2. Ensure that all rubber hoses are in a good condition.
3. Always fit new steel clips to retain the various vent hoses.
4. After fitting the fuel tank, ensure that the adapter(s) securing the fuel pipe(s) does not leak when the fuel pumps are operating.

Fuel filler - To remove
1. Disconnect the battery and ensure that the necessary workshop safety precautions are carried out.
2. Remove the carpet and underlay in the luggage compartment.
3. Remove the tool kit.
4. Remove the fuel filler door release ring.
5. Unscrew the five Phillips headed screws from the side carpet; four secure the brackets retaining the tool kit and the fifth is positioned at the front of the side carpet.
6. Release the Tenax clip situated adjacent to the rear lamps access point.
7. Remove the side carpet and the carpet covering the fuel filler neck. The carpet panel covering the filler neck is retained by a setscrew at the top (accessible from within the fuel filler box) and a small screw at the rear (screws into the luggage compartment floor).
8. Using special pliers (RH 8090) remove the steel clips from the rubber hoses. Withdraw the hoses from their respective pipes.
9. From inside the luggage compartment unscrew and remove the metal connection for the vent hose situated half-way up the metal filler pipe.
10. Unscrew the worm drive clips securing the convoluted rubber hose.
11. From inside the filler box remove the screws securing the filler assembly to the body.
12. Withdraw the metal filler assembly.

Fuel filler - To fit
Fit the fuel filler by reversing the procedure given for removal, noting the following.
1. Fit new gaskets if necessary.

Cars destined for the U.S.A. and Canada

The fuel tank is fitted at the forward end of the luggage compartment behind the carpet covered sealing panel (see Fig. K6).

A small expansion tank of approximately 3,12 litres (5.5 Imp. pt. - 6.7 U.S. pints) capacity is situated within the main fuel tank to inhibit complete filling and thereby, provide fuel expansion volume to cope with extreme temperature conditions.

When the car is being filled with fuel, the main fuel tank (without an expansion tank) could normally be completely filled, leaving only the filler neck and vent connector pipes to accommodate the expansion of the fuel. An expansion tank is therefore situated in the upper part of the main fuel tank and as the fuel level rises above the lower part of the

expansion tank it flows inside through two small holes in the base. Two additional holes in the top of the expansion tank allow air to escape.

Fuel tank - To remove

1. Disconnect the battery.
2. Either drain or siphon the fuel from the tank.
3. Unscrew the four Pozidriv screws situated across the carpet covered sealing panel. Remove the screws and collect the washers.
4. Withdraw the panel to reveal the fuel tank assembly.
5. Unscrew the worm drive clip securing the roll-over valve assembly to the crossmember. Detach the rollover valve from the crossmember.
6. Remove the crossmember (see Figs. K7 and K8); this is secured by a 7/16 in. A/F nut, bolt and washer to the bottom of each luggage compartment lid hinge assembly.
7. Disconnect the three electrical cables from the fuel tank level gauge (see Fig. K8).
8. Remove the tape from the electrical loom by peeling it back from the fuel tank. Tape the electrical loom away from the vicinity of the fuel tank.
9. Unscrew the worm drive clips securing the three rubber vent hoses to their respective connections on the fuel tank (see Fig. K9); withdraw the hoses.
10. Unscrew the worm drive clip securing the rubber filler neck hose to the fuel tank (see Fig. K8); withdraw the hose.

Blank off the fuel tank connection.

11. From beneath the car, unscrew and detach the fuel pipes. Each connection is an olive and threaded union. Label the pipes to facilitate assembly.

Blank off the fuel tank connections.

12. Unlock and unscrew the half-nut from each of the two tank retaining strap bolts (see Fig. K9).
13. Unscrew the full nut from each of the two tank retaining strap bolts (see Fig. K9).
14. Withdraw the bolts, and collect the four bridge pieces from the ends of the straps.
15. Unscrew and remove the two floor mounted fuel tank straps.
16. Carefully withdraw the fuel tank assembly. If difficulties are encountered, proceed as follows.
17. Suitably position four wooden wedges along the base of the fuel tank.
18. Drive the wedges between the bottom of the fuel tank and the luggage compartment floor. Ensure that the wedges do not exert to much force otherwise damage to the fuel tank may result.

The fuel tank may not become free instantaneously as separation may be a gradual process. Therefore, the wedges should be left in position for a period of time.

19. After a while carry out an examination and check if the fuel tank can be withdrawn. If not, check if the wedges have becorne loose and if so, drive them in again to maintain the separating force.

Leave the wedges in position for a further period of time.

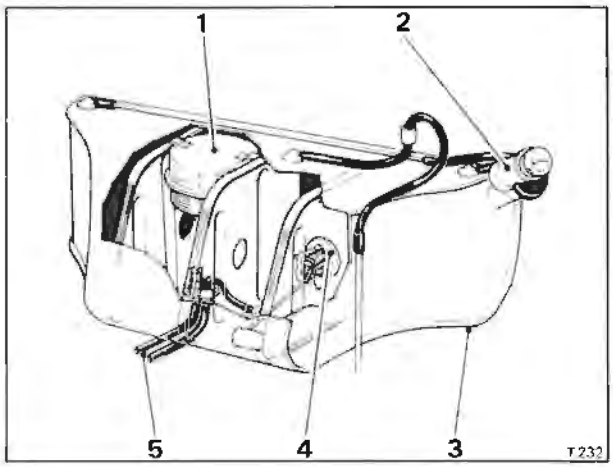

Fig. K6 **Fuel tank assembly (U.S.A. and Canada)**
1 Expansion tank and overfill limiter
2 Filler neck
3 Fuel tank
4 Float assembly
5 Fuel lines

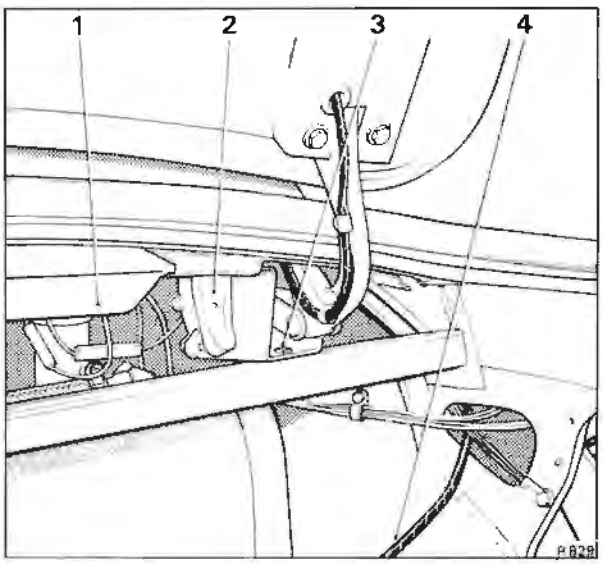

Fig. K7 **Luggage compartment lid hinge assembly**
1 Interior ventilation duct
2 Hinge assembly
3 Crossmember retaining bolt
4 Gauge unit loom

20. Continue to repeat the exercise until separation takes place and the fuel tank can be withdrawn.
21. A shaped wooden block with a Compriband strip attached lies behind the tank and may be attached when the tank is removed; ensure that this block and Compriband are replaced behind the rear seat panel.

Fuel tank - To fit

1. Clean the forward end of the luggage compartment.

If blanking plugs, nuts, washers etc., remain in

Printed in England
© Rolls-Royce Motors Limited 1983
April 1983
T.S.D. 4200

this area when the fuel tank is fitted, they could become the cause of noise which may prove difficult to eradicate once the fuel tank is in position.

Also, ensure that the battery is disconnected and the necessary standard workshop precautions carried out.

2. Ensure that the self-tapping screws that secure the pipe retaining clips beneath the car do not protrude too far into the luggage compartment. Extra long screws could puncture the fuel tank.

3. Position the strips of Compriband in position.

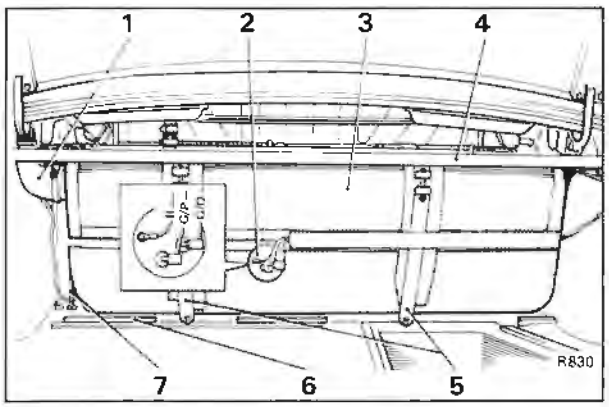

Fig. K8 Fuel tank fittings
1 Fuel filler hose
2 Gauge unit
3 Soundproofing panel
4 Crossmember
5 Securing straps
6 Carpet runner slots
7 Metal pipe (to evaporative loss control canister)

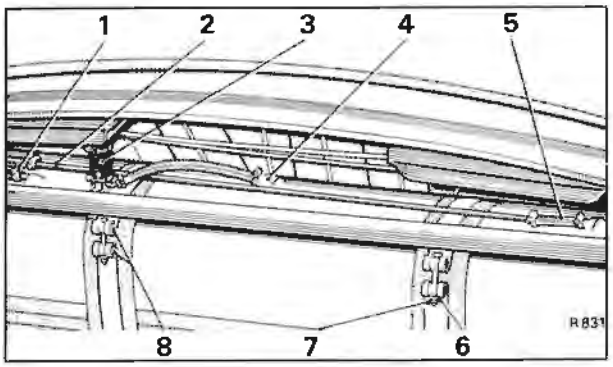

Fig. K9 Fuel tank vent connections
1 Vent - filler neck
2 Fuel tank vent metal pipe
3 Rollover valve
4 Vent - rollover valve
5 Vent - filler neck
6 Full nut
7 Half-nut (lock-nut)
8 Bridge pieces

Also fit the Compriband pad around the hole in the luggage compartment floor.

The Compriband and the two rubber blocks should be secured in position using an appropriate adhesive such as Dunlop S81. The two rubber blocks fit approximately 5,08 cm. (2.0 in.) above the luggage compartment floor on the panel dividing the compartment from the car interior.

The position of all mounting strips are shown in Figure K10.

4. Fit the four fuel tank securing straps to the body (see Fig. K10). The two upper mountings are similar and are shown in Figure K10 - Inset A. The two lower mountings are different, the left-hand mounting is shown in Figure K10 - Inset B, where the bolt passes through the body and is retained by a nut. The right-hand mount is shown in Figure K10 - Inset C, where the bolt has a distance piece (if fitted) and screws directly into a threaded bush attached to the body.

5. Fit the 4,8 mm. ($^{3}/_{16}$ in.) internal diameter rubber hose to the metal pipe situated on the left-hand side of the luggage compartment. This pipe is situated adjacent to the panel dividing the luggage compartment from the car interior (see Fig. K8).

Temporarily attach the open end of the rubber hose high in the luggage compartment so that it will be above the fuel tank.

6. Fit the sound proofing panel to the fuel tank and secure in position with tape (see Fig. K8). In addition, fit two pieces of tape around the fuel tank so that the securing straps will sit on the tape when the tank is secured in position (see Fig. K8).

7. Bend the securing straps to enable the fuel tank to be fitted.

8. Fit the fuel tank into position, ensuring that the boss on the base of the tank fits into the hole in the luggage compartment floor.

9. Secure the fuel tank in position as follows (see Fig. K8).

10. Fit a bridge piece to the end of each securing strap and secure the fuel tank in position by fitting a long $^{3}/_{16}$ in. A/F bolt, downwards, through the upper and lower securing strap bridge pieces. Screw a full nut on to the bolt.

11. Repeat Operation 10 to the second set of securing straps.

12. Tighten the full nut of each set of securing straps and lock in position by fitting an additional half-nut to each of the two bolts.

13. From beneath the car fit the fuel pipes to the fuel tank, each connection is provided by an olive and a threaded union.

14. Fit the rubber intake pipe to the fuel tank neck and secure the end of the hose with a worm drive clip.

15. Fit the two 8,0 mm. ($^{5}/_{16}$ in.) internal diameter rubber hoses of the fuel intake assembly to the fuel tank vents. One hose connects directly to the vent; the second hose connects to the vent on the other side of the fuel tank via a metal pipe which is fitted across the top of the tank (see Fig. K9).

Secure the ends of the hoses with worm drive clips.

16. Fit the open end of the 4,8 mm. (3/16 in.) diameter hose referred to in Operation 5 to the top of the rollover valve assembly. Fit an 8,0 mm. (5/16 in.) internal diameter hose between the centre vent in the top of the fuel tank and the bottom connection of the rollover valve (see Fig. K9).

Secure the ends of the hose with worm drive clips.

17. Fit the crossmember (see Fig. K8), attaching it to the bottom bracket of each of the two luggage compartment lid hinge assemblies with a 7/16 in. A/F bolt, washer and nut (see Fig. K7).

18. Locate the fuel gauge sender unit electrical loom situated above the right-hand rear wheel arch. There are three cables in the loom and these are coloured black, green/orange and green/purple.

Tape the cables across the fuel tank until they are adjacent to the fuel gauge sender unit, as shown in Figure K8.

19. Connect the cables to the fuel gauge sender unit as shown in the inset of Figure K8.

20. Locate the base of the carpet covered panel into the wooden runner slots (see Fig. K8) and secure the top of the panel with four Pozidriv screws and washers to the crossmember.

21. Connect the battery.

Fuel filler - To remove (All cars except Corniche Convertible)

1. Disconnect the battery.

2. Unscrew and remove the four Pozidriv screws situated across the carpet covered sealing panel at the forward end of the luggage compartment.

3. Withdraw the carpet covered sealing panel to reveal the fuel tank assembly.

4. Unscrew the worm drive clips securing the two 8,0 mm. (5/16 in.) internal diameter rubber hoses to the two outer vents on the top of the fuel tank and withdraw the hoses. One hose fits directly on to a vent while the other fits to a metal pipe which extends across the width of the fuel tank.

5. Unscrew the worm drive clip securing the fuel inlet hose to the fuel tank; withdraw the hose and blank off the fuel tank inlet.

6. From inside the car remove the trim panel that covers the filler assembly, this is situated adjacent to the rear window.

On all cars except the Silver Wraith fitted with a small rear window unscrew the two screws from the wooden finisher fitted around the rear window. Carefully withdraw the trim panel to reveal the upper connection for the fuel filler.

7. Unscrew the worm drive clip securing the fuel filler hose to the fuel filler head. Withdraw the fuel filler neck assembly downwards into the luggage compartment.

8. Open the fuel filler flap. Unscrew and remove the fuel filler cap.

9. Using a screwdriver, unscrew and remove the six screws securing the fuel filler head to the body,

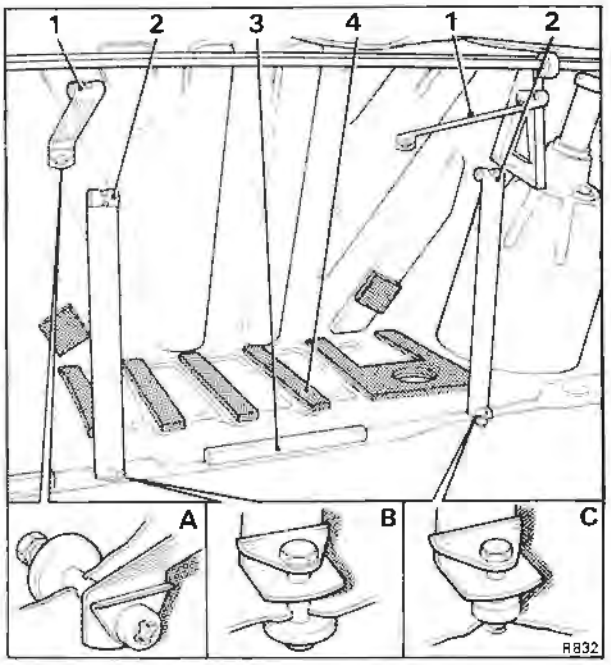

Fig. K10 Luggage compartment - Fuel tank fittings
1 Upper securing straps
2 Lower securing straps
3 Carpet runner slots
4 Compriband rubber

collect the washers from the retaining screws and withdraw the fuel filler head assembly.

Fuel filler - To fit (All cars except Corniche Convertible)

Fit the fuel filler assembly by reversing the procedure given for removal, noting the following.

1. When fitting the fuel filler head to the body ensure that the restrictor is in its lowest position.

Fuel filler - To remove (Corniche Convertible)

1. Remove the carpet covered sealing panel from the forward end of the luggage compartment.

2. Disconnect the two rubber hoses from the outer vents on top of the fuel tank.

3. Unscrew the upper and lower worm drive clips from the fuel filler neck assembly, withdraw the assembly and blank off the fuel tank.

4. Open the fuel filler flap. Unscrew and remove the fuel filler cap.

5. Using a screwdriver, unscrew and remove the six screws securing the fuel filler head to the body, collect the washers from beneath the heads of the screws. Withdraw the assembly.

Fuel filler - To fit (Corniche Convertible)

Fit the fuel filler assembly by reversing the procedure given for removal.

Printed in England
© Rolls-Royce Motors Limited 1983
April 1983
T.S.D. 4200

Section K3

Fuel pumps

Two types of fuel pump assemblies are fitted depending upon the specification of the vehicle.

Either a dual pump type of unit comprising twin S.U. electric pumps mounted onto a common diecast body (fitted to the majority of cars) or a single Pierburg rotary vane electric pump, is fitted.

Twin S.U. electric fuel pumps (see Fig. K11)

The dual pump assembly is fitted beneath the car on the right-hand side above the drive-shaft.

Each pump has three main elements, the body, the solenoid assembly and the contact breaker assembly.

Operation (see Fig. K12)

With the pump at rest the twin set of tungsten points are in contact. When the ignition is switched on and the engine oil pressure inhibit circuit by-passed, current passes from the terminal stud through the solenoid assembly and contact breaker points to earth, thus energising the solenoid and attracting the armature. The armature, together with the diaphragm assembly then reacts by moving towards the solenoid against pressure from the armature spring and in doing so, draws fuel through the inlet valve into the pumping chamber.

When the armature is nearing the end of its stroke the 'toggle over' mechanism operates and the outer rocker moves rapidly backwards, separating the contact breaker points and breaking the electrical circuit. The armature and diaphragm then move away from the solenoid due to the reaction of the compressed armature spring and thereby, force fuel through the delivery valve.

As the armature nears the end of its pumping stroke the 'toggle over' mechanism again operates,

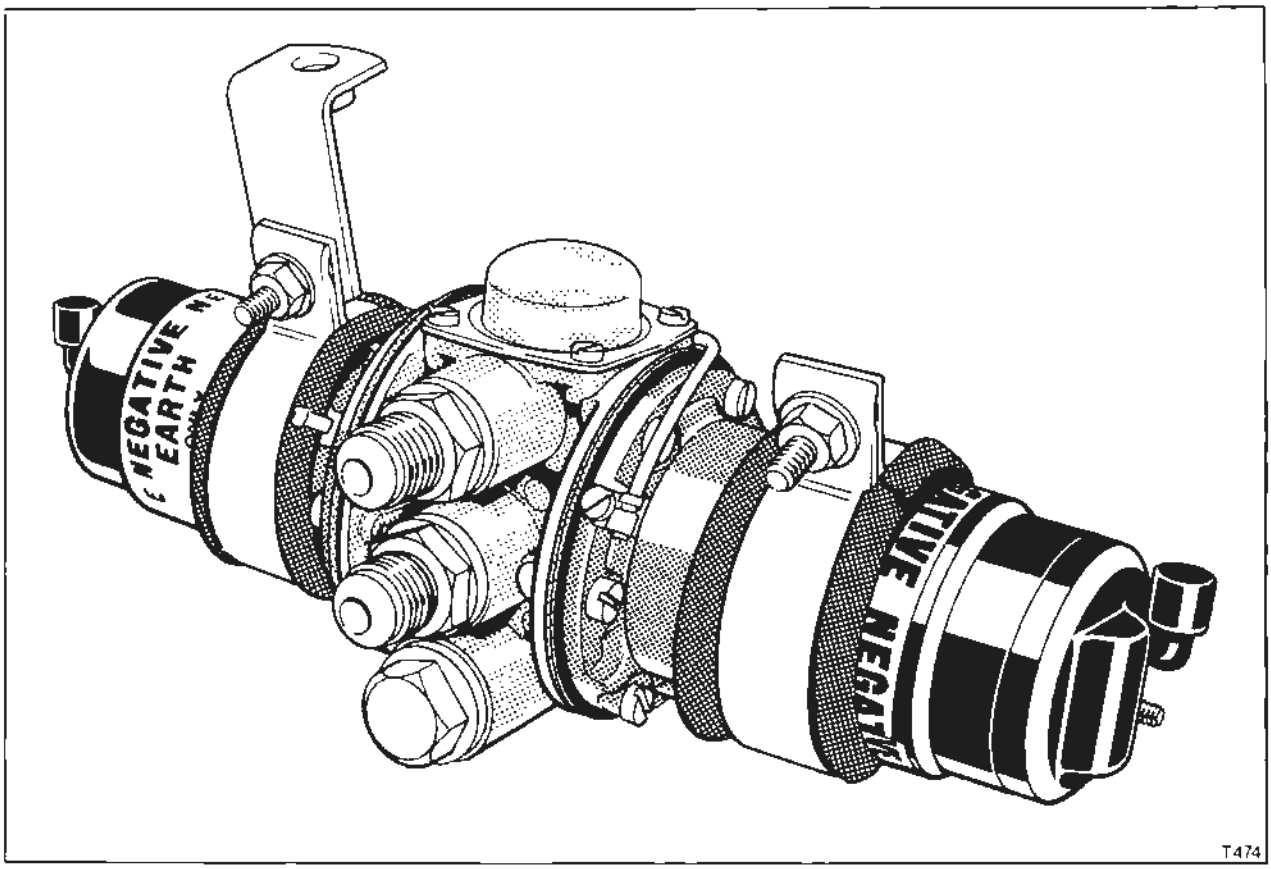

Fig. K11 S.U. fuel pumps assembly

Printed in England
© Rolls-Royce Motors Limited 1978
August 1978
T.S.D. 4200

the tungsten points make contact again and the cycle of operations is repeated.

Note

Switching on the ignition does not necessarily activate the fuel pumps as an oil pressure interlock circuit is fitted, this inhibit circuit prevents operation of the fuel pumps until there is engine oil pressure. To by-pass the inhibit circuit for test purposes, disconnect the brown/yellow cable from the outer oil pressure switch situated on the engine oil filter elbow.

S.U. fuel pumps assembly - To remove (see Fig. K13)

1. Drive the car onto a ramp.
2. Ensure that the parking brake is firmly applied.
3. Remove the gear range selector thermal cut-out from the fuseboard.
4. Disconnect the battery.
5. Carry out the necessary workshop safety precautions.
6. Raise the ramp to a convenient working height.
7. Withdraw the protective rubber cover from both ends of the fuel pump assembly.
8. Unscrew and remove the nut securing the white/pink electrical feed cable to the terminal stud; withdraw the cable. Repeat the operation at the other end of the fuel pump assembly.

Note

The suppressor lead is fitted to the rear fuel pump terminal stud.

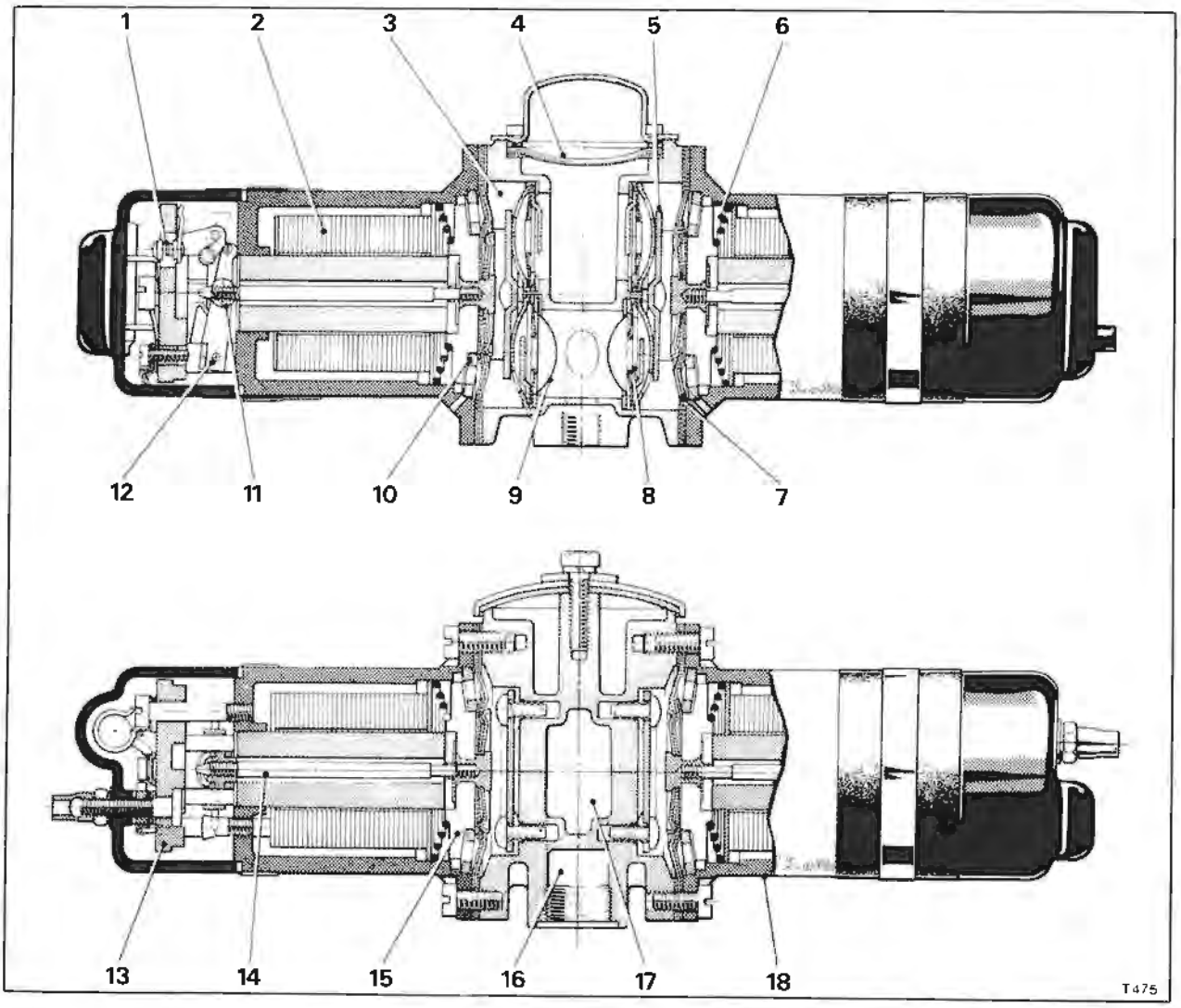

Fig. K12 Operation of S.U. fuel pumps assembly

1 Tungsten points
2 Magnet coil
3 Pumping chamber
4 Flow smoothing diaphragm
5 Clamp plate
6 Armature spring
7 Diaphragm assembly
8 Inlet valve
9 Filter
10 Armature guide plate
11 Trunnion
12 Rocker spindle
13 Pedestal
14 Armature spindle
15 Armature
16 Common outlet
17 Delivery chamber
18 Coil housing

9. Using a ¾ in. A/F spanner unscrew and detach the inlet and outlet pipe adapters from the pump body unions.

Suitably blank all open connections.

10. Using a 7/16 in. A/F spanner unscrew the nut situated above the front mounting, withdraw the bolt and collect the two washers (one on either side of the bracket).

Release the earth braid from the bolt.

11. Hold the pump assembly and using a ½ in. A/F spanner unscrew the two nuts retaining the pump assembly to the mounting bracket. Collect the washers and withdraw the suppressor from the rear mounting stud.

12. Partially withdraw the pump assembly and detach the polythene breather tube from both pump bodies. Completely withdraw the pump assembly.

S.U. fuel pumps assembly - To fit

Fit the fuel pumps assembly by reversing the procedure given for removal, noting the following points.

1. Ensure that the suppressor is fitted to the rear pump mounting stud and the cable to the rear pump terminal stud.

2. Ensure that the polythene breather tubes and protective rubber covers are in a good condition.

S.U. fuel pumps assembly - To dismantle (see Fig. K14)

All faulty fuel pump assemblies should be reconditioned by the manufacturer and therefore, when an assembly is found faulty it is advisable to replace it with either a new or reconditioned unit. If this is not possible however, the fault should be rectified in the existing assembly.

Reconditioned pump units and parts can be obtained from the Parts Department at Crewe. Pump assembly mounting nuts will be supplied with a new or reconditioned assembly therefore, the nuts used with the displaced unit should be screwed onto their respective threads and returned with the assembly.

Neither inlet nor outlet unions are supplied with reconditioned pumps therefore, the unions should be removed from the displaced assembly and retained for fitting to the new assembly.

1. Remove the pump assembly from the car.

2. Unscrew and remove the 7/16 in. A/F nut securing the pump mounting bands. Withdraw both front and rear mounting bands.

3. From the pumps, remove the sponge rubber strip that is used to seat the mounting band.

4. Unscrew the cheesehead screws securing the earth braid to the pumps.

The remainder of the dismantling operations refer to **one** pump unit and therefore, they must also be carried out on the other pump unit if the complete assembly is to be dismantled.

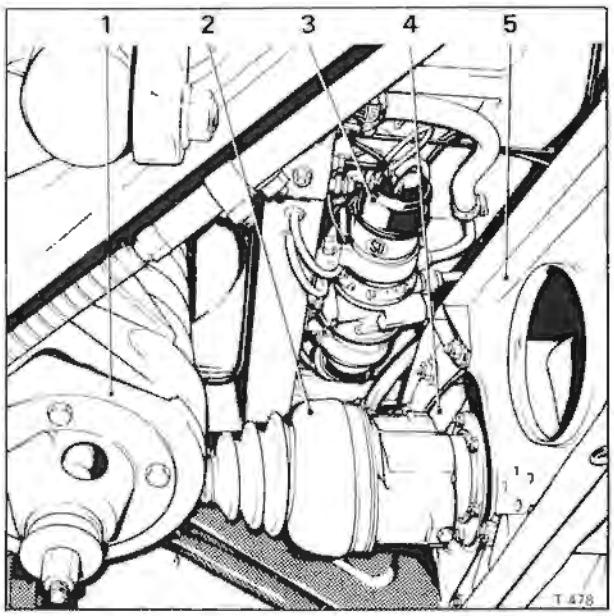

Fig. K13 S.U. fuel pumps in position

1 Rear suspension unit
2 Half-shaft ball and trunnion joint
3 Twin S.U. fuel pump assembly
4 Final drive casing
5 Torque arm

Contact breaker (see Fig. K15)

5. Remove the tape seals and rubber sealing band.

6. Unscrew the terminal nut and collect the shakeproof washer.

7. Withdraw the end cover.

8. Unscrew the small cheesehead screw situated at the lower end of the unit, completely withdraw the screw and collect the washer. This will release both the black electrical cable to the condenser and the long black lead to the coil. The contact blade that carries one half of the tungsten points can be withdrawn.

Pedestal and rocker (see Fig. K15)

9. Withdraw the rubber washer from the terminal stud, unscrew the terminal nut and remove the lead washer. The lead washer will have flattened and spread into the terminal thread, it should be carefully removed using cutting pliers or a knife.

10. Unscrew the two 2BA screws retaining the pedestal to the coil housing; remove the earth terminal tag from the left-hand screw and spring washer from both screws.

11. Tilt the pedestal and withdraw the terminal stud thus freeing the red electrical cable to the condenser (this will allow the condenser to be removed) and the short black lead to the coil.

12. The pedestal can now be removed with the rocker mechanism attached.

13. Push out the hardened steel pin which holds the rocker mechanism to the pedestal and separate the two parts.

Printed in England
© Rolls-Royce Motors Limited 1978
August 1978
T.S.D. 4200

Coil housing and diaphragm (see Fig. K16)

14. Unscrew the cheesehead screws that secure the pumping unit coil housing to the pump body. Use a thick-bladed screwdriver to avoid damaging the screws heads.

15. The coil housing should be carefully withdrawn from the pump body.

16. Unscrew the diaphragm and spindle assembly by rotating the diaphragm in an anti-clockwise direction until the armature spring pushes the

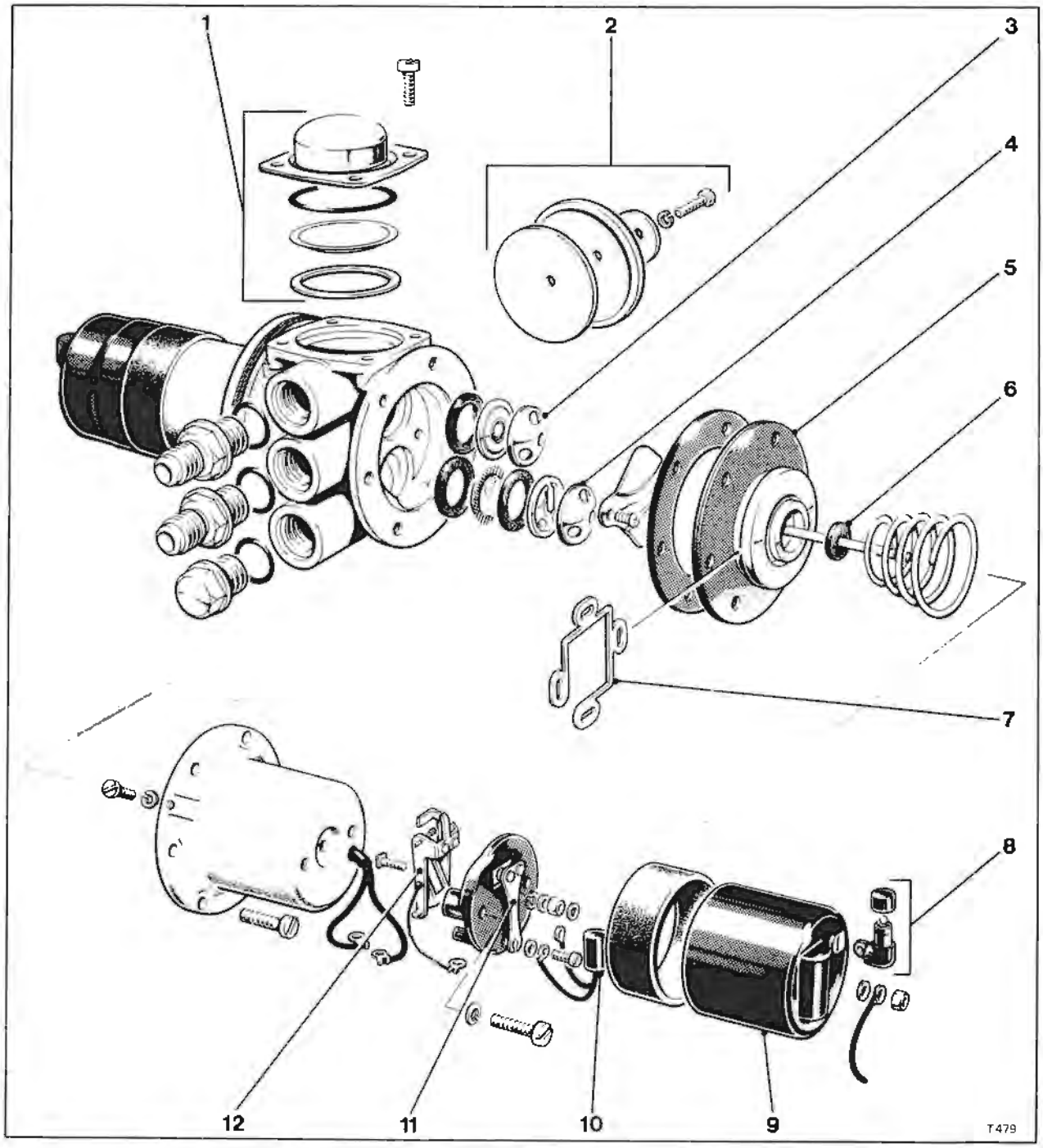

Fig. K14 S.U. fuel pumps assembly - Exploded

1 Flow smoothing device
2 Inlet air bottle
3 Outlet valve
4 Inlet valve
5 Diaphragm
6 Impact washer
7 Nylon guide plate
8 Vent valve
9 End cover
10 Condenser
11 Contact blade
12 Rocker mechanism

diaphragm away from the coil housing.

Collect the moulded nylon armature guide plate.

Note

The diaphragm and its spindle are serviced as one unit and no attempt should be made to separate them.

Body and valves (see Fig. K17)

17. Unscrew and remove the two Phillips screws securing the valve clamp plate, remove the valve caps, valves, sealing washers and filter.

18. Unscrew the four 4BA cheesehead screws securing the delivery flow smoothing device cover. Remove the cover and withdraw the rubber 'O' ring, plastic diaphragm and sealing washer.

19. Remove the single 2BA hexagon headed setscrew securing the inlet air bottle cover. Remove the cover and gasket.

20. Unscrew and remove the inlet and outlet unions.

S.U. fuel pumps assembly - To clean

If gum formation has occurred in the pump assembly, the components in contact with the fuel will have become coated with a substance similar to varnish. This has a strong stale smell and may attack the neoprene diaphragm. **Brass** and **steel** parts so affected can be cleaned by boiling them in a 20% solution of caustic soda, then dipping them in a strong nitric acid solution and finally washing them off in boiling water.

Light alloy parts should be well soaked in methylated spirits and then cleaned, do not use caustic soda to clean these parts.

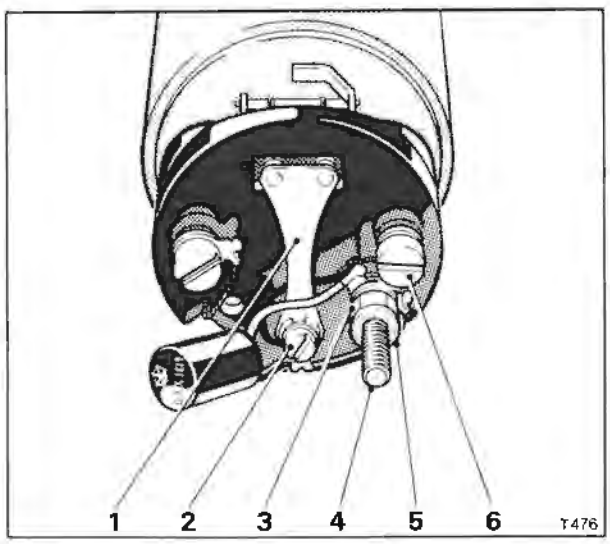

Fig. K15 Fuel pump - end cover removed

1 Contact blade
2 Cheesehead screw
3 Terminal nut
4 Terminal stud
5 Rubber washer
6 2BA screw

S.U. fuel pumps assembly - To inspect

1. Clean the pumps assembly and inspect for cracks, damaged joint faces and threads.

2. Examine the plastic valves of the inlet and outlet valve assemblies for kinks or damage to the valve plates. The assemblies can be checked by blowing and sucking with the mouth.

3. Check that the narrow tongue on the valve cage (bent over to retain the plastic valve and to prevent it being forced out of position) has not been

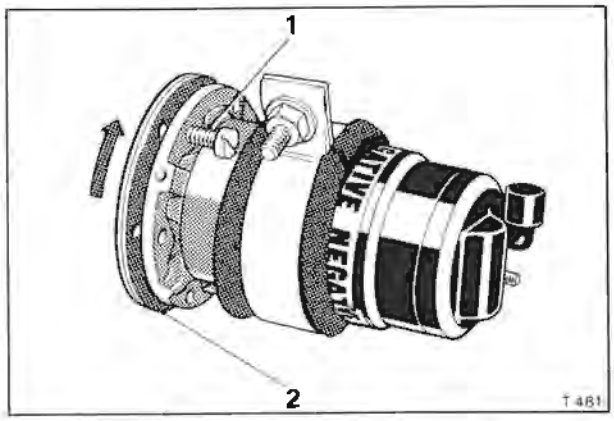

Fig. K16 Fuel pump - diaphragm removal

1 Screw
2 Diaphragm removal (anti-clockwise)

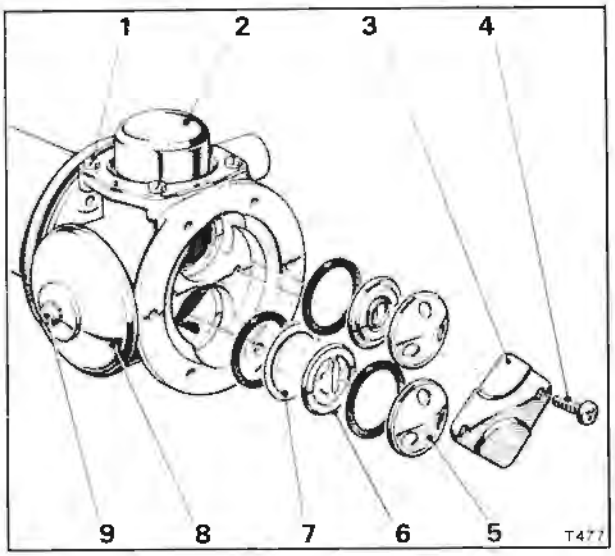

Fig. K17 Fuel pump - body and valves

1 4BA screw
2 Flow smoothing device cover
3 Valve clamp plate
4 Phillips screw
5 Valve cap
6 Valve
7 Filter
8 Air bottle cover
9 2BA setscrew

Printed in England
© Rolls-Royce Motors Limited 1978
August 1978
T.S.D. 4200

distorted but allows the plastic valve to lift approximately 1,59 mm. (1/16 in.) as shown in Figure K18.

4. If the delivery flow smoothing device has been dismantled, examine the plastic diaphragm, for damage. If in doubt, renew the diaphragm.

5. Examine the inlet air bottle cover for damage.

6. Inspect the valve recesses in the body for damage and corrosion; if it is either impossible to remove the corrosion or if the recess is pitted, the pump body must be discarded.

7. Clean the filter (located behind the inlet valve) and examine for fractures; renew if necessary.

8. Examine the cable insulation on the four electrical leads, also the connection tags for security (two condenser leads and two coil leads).

9. Inspect the contact breaker points for signs of burning and pitting; if this condition is evident, the rocker assembly and spring blade must be discarded and new parts fitted.

10. Closely examine the pedestal for cracks or other damage, particular attention should be given to the narrow ridge on the edge of the rectangular hole where the contact blade rests.

11. Examine the non-return vent valve in the end cover for damage, ensure that the small ball valve is free to move.

12. Inspect the neoprene pumping diaphragm for signs of deterioration.

13. Always fit new fibre and cork washers or gaskets and rubber 'O' rings.

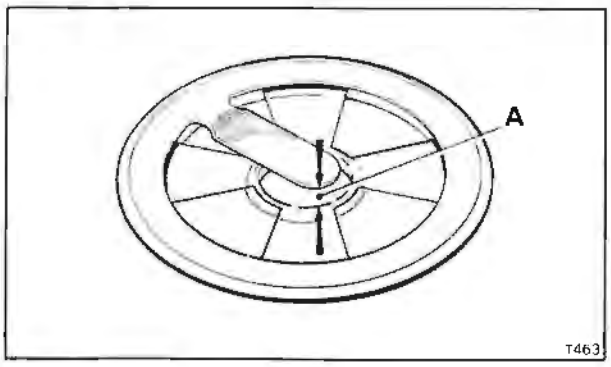

Fig. K18 Valve lift
A 1,59 mm. (0.062 in.)

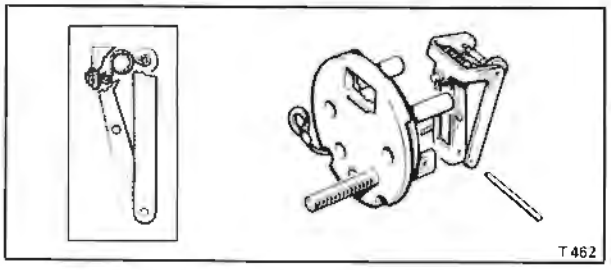

Fig. K19 Fitting the rocker assembly to the pedestal

S.U. fuel pumps assembly - To assemble
Pedestal and rocker (see Figs. K19 and K20)

1. Invert the pedestal and fit the rocker assembly by pushing the specially hardened steel pin (see Fig. K19) through the small holes in the rocker and pedestal struts.

Position the centre toggle so that the inner rocker spindle is in tension against the rear of the contact points. Also ensure that the centre toggle spring is above the upper spindle (see Fig. K19, inset). The position of this centre toggle spring is important to obtain the correct 'throw-over' action. It is essential that the rockers are perfectly free to swing on the pivot pin and that the arms are not binding on the legs of the pedestal. If necessary the rockers can be aligned using a pair of thin nose pliers.

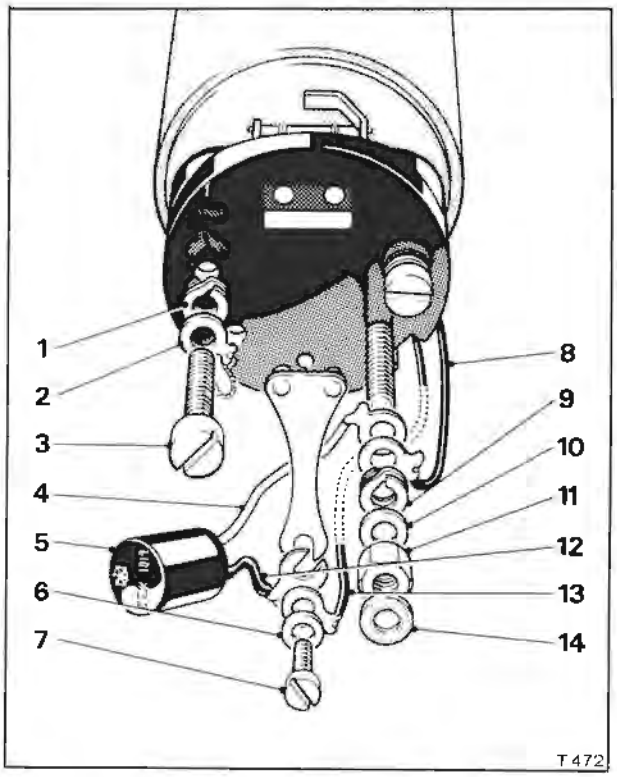

Fig. K20 Fitting the pedestal assembly to the coil housing
1 Spring washer
2 Earth tag
3 Setscrew
4 Condenser cable (red)
5 Condenser
6 Washer
7 Cheesehead screw
8 Coil cable (long black)
9 Spring washer
10 Lead washer
11 Terminal nut
12 Condenser cable (black)
13 Coil cable (short black)
14 Rubber washer

2. Assemble the square headed 2BA terminal stud to the pedestal (see Fig. K20), the inward face of the pedestal is recessed to take the square head of the terminal stud. Fit the tag of the red lead from the condenser and the tag of the short black coil lead to the terminal stud as it is fitted through the pedestal.
3. Fit the spring washer, the lead washer and then the coned nut with its coned face to the lead washer. Tighten the 2BA terminal nut and finally add the rubber end cover sealing washer.
4. Assemble the pedestal to the coil housing by fitting the 2BA pedestal screws ensuring that the spring washer on the left-hand screw is between the pedestal and the earthing tag.
5. Tighten the pedestal screws; take care that the earthing tag does not turn as this may either strain or break the earthing flex. Do not overtighten these pedestal screws otherwise the pedestal assembly may crack.

Do not fit the contact blade at this stage

Diaphragm assembly (see Fig. K21)

6. Place the armature spring into the coil housing with its larger diameter towards the coil.
7. Before fitting the diaphragm ensure that the impact washer is fitted to the armature (this is the small neoprene washer that fits into the armature recess).
8. Fit the diaphragm by inserting the spindle into the hole in the coil and screwing it into the threaded trunnion in the centre of the rocker assembly.
9. Screw the diaphragm inwards (clockwise direction) until the rocker will not 'throw-over' when the centre of the diaphragm is pressed in. Exercise care during this operation to ensure that the 'no throw-over' condition is not confused with 'jamming' the armature on the internal steps of the coil housing.
10. Turn back the edge of the diaphragm and insert one of the nylon armature guide plate end lobes into the recess beneath the diaphragm as shown in Figure K22. Ensure that the flat face of the guide plate is adjacent to the diaphragm.
11. Carefully ease the guide plate into position beneath the diaphragm.
12. Press each lobe of the guide plate into the recess. In order to avoid distorting the guide plate it is important that the two end lobes are not pressed into position until all other guide plate operations have been carried out.
13. Check and if necessary adjust the stop finger and rocker finger settings (see Fig. K23). Temporarily fit the contact blade to the pedestal housing and secure with the small screw.
14. Ensure that the lift of the contact blade tip above the top of the pedestal is 0,9 mm. ± 0,13 mm. (0.035 in. ± 0.005 in.) when measured at A in Figure K23 with a feeler gauge. Bend the stop finger beneath the pedestal to obtain this setting.
15. Check the gap between the rocker finger and the coil housing with a feeler gauge, bend the rocker finger if necessary to obtain a gap setting of 1,8 mm. ± 0,13 mm. (0.070 in. ± 0.005 in.).
16. Carefully remove the small screw and withdraw the contact blade.
17. Hold the coil housing assembly horizontally in the left hand, push the diaphragm spindle inwards with the thumb of the right hand, push firmly but steadily.
18. Unscrew the diaphragm in an anti-clockwise direction, pressing and releasing with the thumb until the rocker just 'throws-over' (see Fig. K24). Continue to unscrew the diaphragm until the holes in the diaphragm align with the holes in the pump body. Then, unscrew a further four holes (i.e. two-thirds of a complete turn). The diaphragm is now correctly set.

Pump body components

19. Ensure that the pump body is clean.

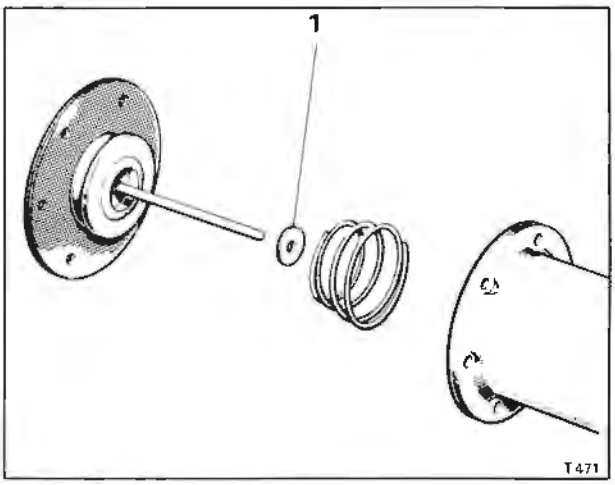

Fig. K21 Fitting the diaphragm to the coil housing
1 Impact washer

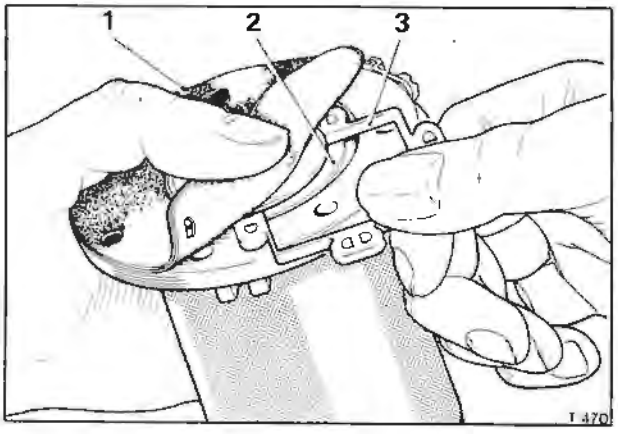

Fig. K22 Fitting the nylon armature guide plate
1 Diaphragm
2 Solenoid recess
3 Nylon guide plate

Printed in England
© Rolls-Royce Motors Limited 1978
August 1978
T.S.D. 4200

20. Fit the inlet and outlet unions into the pump body with new sealing washers.
21. Assemble the inlet valve (see Fig. K25) into the inlet recess of the pump body (the inlet recess is deeper than the outlet recess) in the following order, rubber 'O' ring, filter (domed side in), rubber 'O' ring, valve assembly (tongue side out) and finally the valve cap (domed side out).
22. Assemble the outlet valve (see Fig. K25) into the outlet recess of the pump body in the following order, rubber 'O' ring, valve assembly (tongue side in) and valve cap (domed side out).
23. Take care to ensure that both valve assemblies are correctly seated in their respective recesses and fit the clamp plate which should be secured in position with two Phillips headed screws.
24. Fit the inlet air bottle cover and joint washer (see Fig. K14), secure with the hexagon headed 2BA screw.
25. Place the transparent sealing washer in the bottom of the delivery flow smoothing device recess in the pump body (see Fig. K26). Assemble the remainder of the device by fitting the plastic diaphragm (domed side in), the rubber 'O' ring and finally the cover which should be retained in position by four 4BA screws.

Body attachment
26. Fit the gasket to the pump body ensuring that the securing holes are aligned.
27. Offer the coil housing up to the body ensuring a correct seating between the parts. Ensure that the delivery flow smoothing device is at the top of the pump body. Also ensure that the solenoid housing screw hole for the earth braid is on the upper left-hand side (i.e. ten to the hour).
28. Align the six screw holes and insert the six 2BA screws. Tighten the screws as they appear diametrically opposite each other.
29. Fit the earth braid securing it with a small screw and spring washer. The braid should be fitted so that with the pump inlet and outlet unions pointing away, the largest braid connection is at the right-hand side and not connected.

Contact blade
30. Fit the contact blade and long coil lead to the pedestal using a 5BA screw and washer.
31. Before tightening the 5BA screw slide the black condenser lead tag between the contact blade and coil lead.
32. Adjust the contact blade so that the contact

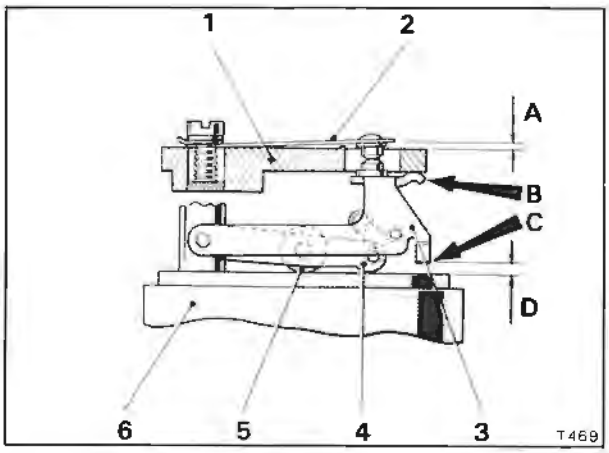

Fig. K23 Rocker finger and stop finger settings
1 Pedestal
2 Contact blade
3 Outer rocker
4 Inner rocker
5 Trunnion
6 Coil housing
A Stop finger setting
B Stop finger
C Rocker finger
D Rocker finger setting

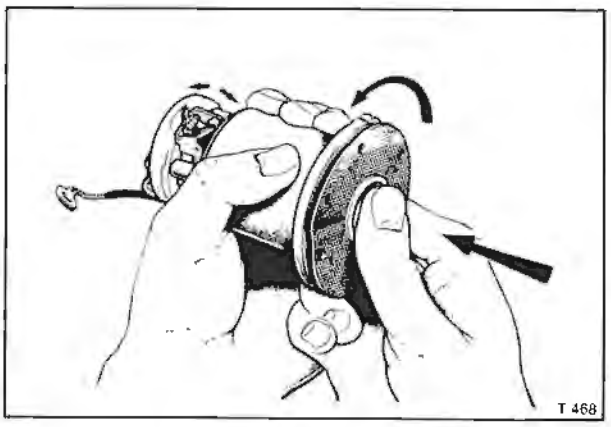

Fig. K24 Setting the diaphragm

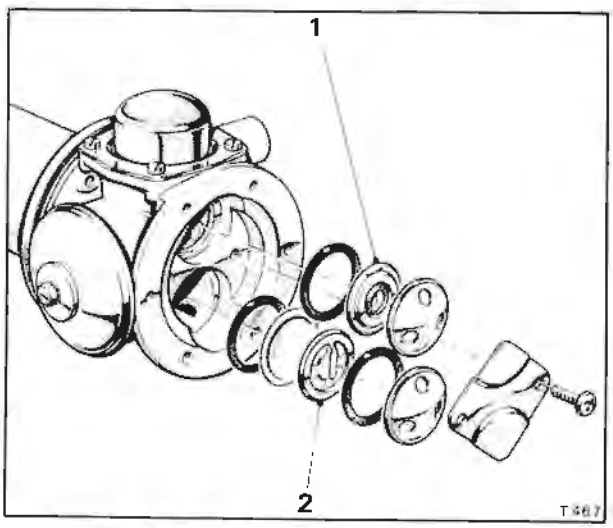

Fig. K25 Valve assembly
1 Outlet
2 Inlet

points are a little above the points on the rocker when the points are closed (see Fig. K27). Also ensure that when the contact points either make or break, one pair of points wipes over the centre line of the other in a symmetrical manner. As the contact blade is provided with a slot for the retaining screw, some degree of adjustment is possible.

33. Tighten the contact blade retaining screw.

Contact gap setting

34. Check that when the outer rocker is pressed onto the coil housing, the contact blade rests on the narrow ridge that projects slightly above the main face of the pedestal (see Fig. K28). If the contact blade does not rest on the ridge, slacken the attachment screw, swing the blade clear of the pedestal and bend it downwards sufficiently to ensure that it will rest lightly against the ridge when secured in position again.

Note

Ensure that the contact blade is not over tensioned otherwise the travel of the rocker mechanism will be restricted.

35. Carry out Operations 13 to 15 inclusive to ensure that the stop finger and rocker finger settings are correct.

36. Ensure that the contact blade is firmly secured in position by its retaining screw.

End cover

37. Carefully bend any spare electric wiring into position so that it cannot foul the rocker mechanism.

38. Ensure that the end cover sealing washer is fitted to the terminal stud, fit the bakelite end cover.

39. Fit the shakeproof washer to the terminal stud and secure the end cover with the terminal nut.

40. Flow test the pump (see Twin S.U. electric fuel pumps - To flow test).

41. After a successful flow test, fit the rubber

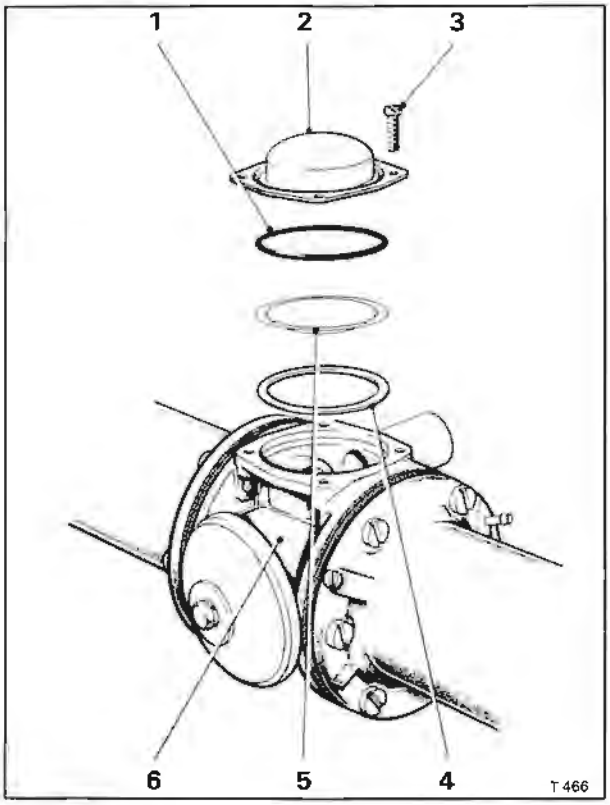

Fig. K26 Delivery flow smoothing device

1 'O' ring
2 Cover
3 Setscrew
4 Transparent sealing washer
5 Plastic diaphragm
6 Pump body

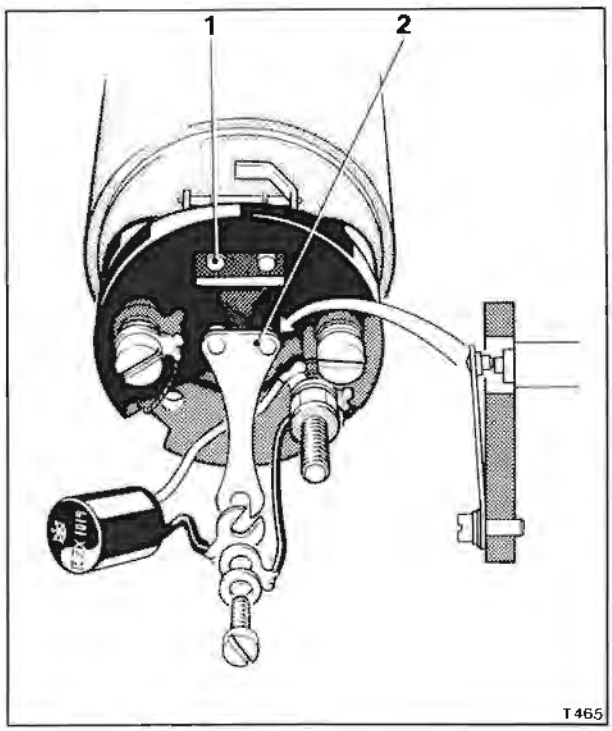

Fig. K27 Setting the position of the contact points

1 Rocker points
2 Contact blade

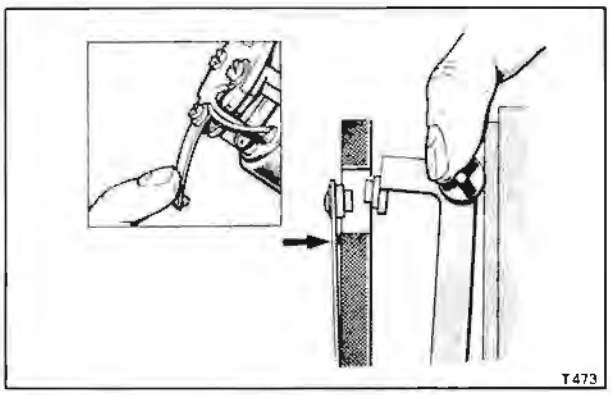

Fig. K28 Contact blade resting on pedestal ridge

Printed in England
© Rolls-Royce Motors Limited 1978
August 1978
T.S.D. 4200

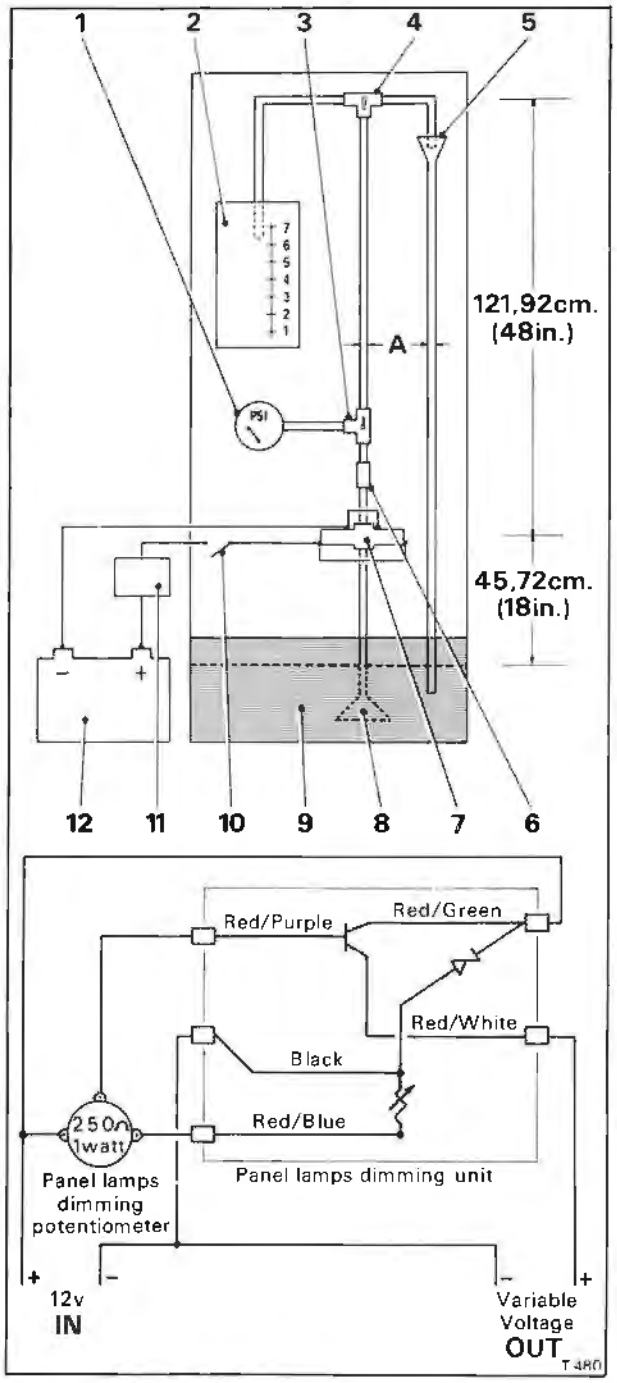

Fig. K29 Fuel pumps assembly test rig

A 7,94 mm. (5/16 in.) dia. bore piping
1 Pressure gauge
2 Measuring container
3 Three-way tap
4 Three-way tap
5 Siphon break
6 Polythene 'sight glass' pipe
7 Fuel pumps assembly
8 Filter
9 Reservoir
10 On-off switch
11 Voltage reducer (12v to 9.5v)
12 12 volt battery

sealing band over the end cover to coil housing joint; secure in position with adhesive tape.

42. Apply an adhesive such as Bostik 772 to the inside of the metal mounting band and around the solenoid housing to retain the foam rubber mounting strip.

43. Allow the adhesive to become tacky and fit the foam rubber mounting strip inside the metal mounting band.

44. Carefully slide the metal mounting band with the foam rubber inlay into position along the pump solenoid body. Press the foam rubber strip onto the adhesive around the solenoid body.

45. Repeat the operations to the other pump assembly.

46. Fit the fuel pumps assembly to the vehicle (see S.U. fuel pumps assembly - To fit).

Twin S.U. electric fuel pumps - To flow test

When both fuel pumps are operating they should deliver a minimum of 2,27 litres (4.0 Imp. pt., 4.8 U.S. pt.) of paraffin in one minute at a delivery head of 1,22 m. (4ft.) and a suction lift of 45,72 cm. (18 in.).

1. Mount the fuel pumps assembly on a test rig similar to that shown in Figure K29.
2. Ensure that the battery used in the test is in a fully charged condition.
3. Carry out the necessary workshop safety precautions including the provision of a suitable fire extinguisher.
4. Connect the flexible inlet and outlet pipes of the test apparatus to the fuel pump unions.
5. Check that the two taps on the test apparatus are positioned so that paraffin will be pumped to the top of the piping and returned to the reservoir via the 'siphon break' line.
6. Switch on the test apparatus and allow the pump to run at maximum voltage for ten minutes. After the first minute of operation observe that there are no bubbles in the paraffin as it passes the polythene pipe (sight glass).
7. Turn the three-way tap to divert the flow of paraffin towards the pressure gauge. Ensure that a pressure of approximately 0,27 kgf/sq.cm. (3.8 lbf/sq.in.) is registered before the pump stalls. Under these conditions the pump should not operate (tick) for at least 15 seconds.

Note

(a) a shorter period than 15 seconds may indicate faulty valves.
(b) if the pump 'buzzes' the diaphragm may be too flexible.

8. Open the three-way tap and allow the pump operation to return to normal.
9. Position the three-way tap situated at the top of the test apparatus to divert the flow of paraffin from the 'siphon break' to the measuring container. Ensure that the fuel pump assembly delivers a minimum of 2,27 litres (4 Imp. pt., 4.8 U.S. pt.) in one minute.
10. Again position the three-way tap so that the

paraffin is directed towards the 'siphon break'. Switch off the test apparatus.

11. Switch the voltage reducing unit (see Fig. K29) to 9.5 volts. Switch on the apparatus for the minimum length of time necessary to ensure that the fuel pumps assembly still operates (although the output may be low).

12. Switch off the test apparatus, disconnect the battery and remove the fuel pumps assembly.

Single Pierburg rotary vane electric fuel pump (see Fig. K30)

The Pierburg pump is an electrically operated rotary vane pump. It is situated on the right-hand side of the car in a vertical position and secured to the rear suspension crossmember. The pump outlet is indicated by the fuel flow direction arrow cast on the top of the outlet boss.

The electrical terminals have metric threads and to assist identification have positive and negative symbols embossed on the bottom face of their plastic surrounds.

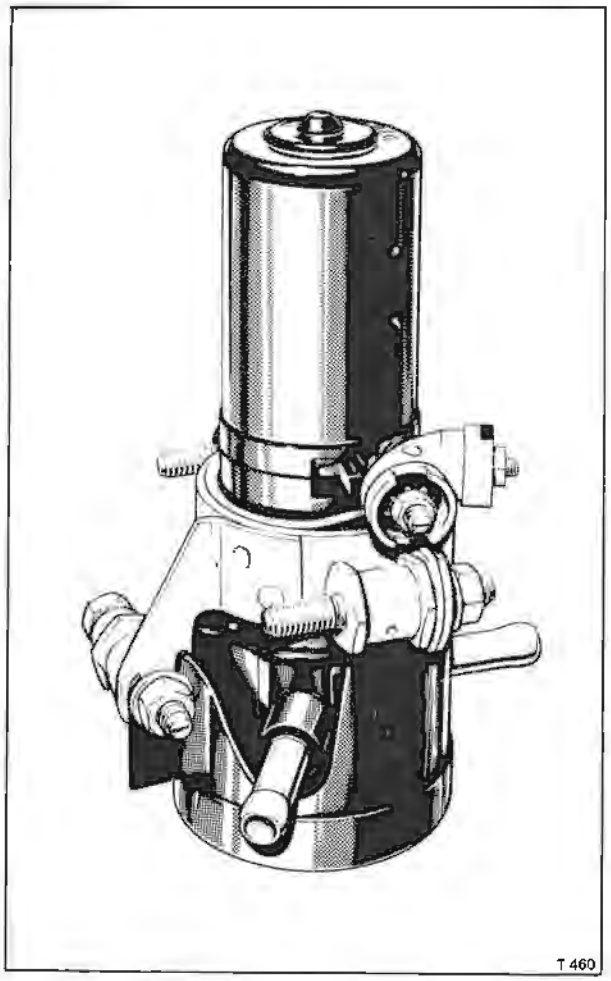

Fig. K30 Single Pierburg rotary vane electric fuel pump

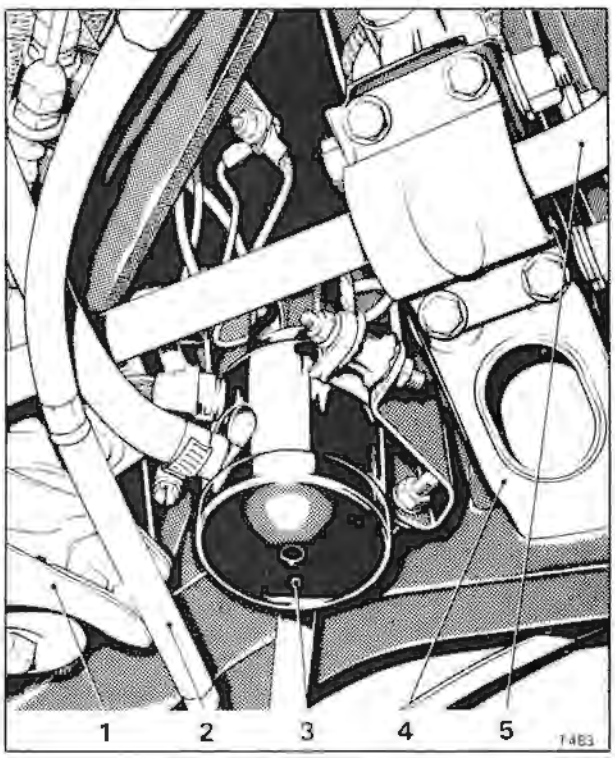

Fig. K31 Installation of Pierburg pump

1 Torque arm
2 Parking brake cable
3 Pierburg pump
4 Rear suspension crossmember
5 Stabiliser bar

Operation

The pump is driven by a permanent magnet coupling. Situated at the end of the pump shaft are two rotational symmetric permanent magnets; the magnetic field of these is used to transmit the drive. The advantage of this coupling is that the drive is broken when the motor is overloaded, thus, both motor and pump are protected from damage.

The rotary vane pump consists mainly of the rotor which has five vanes, the pressure relief valve and the housing. The vanes are produced from wear resistant artifical carbon, they are positioned in the rotor and will slide radially, being guided by centrifugal force onto the interior wall of the excentrically positioned stator. The principle of supplying fuel is that by rotation of the rotor the suction volume in the housing is increasing periodically while the pressure volume is decreasing. Therefore, the fuel to be supplied flows via the suction chamber into the pumping chamber between the vanes, it is then accelerated to the pump outlet chamber by the cells which are formed between the vanes.

A pressure relief valve is located in the fuel outlet; it is pre-set to a minimum pressure of approximately 0,5 kgf/sq.cm. (7.2 lbf/sq.in.) by the installation of the appropriate rated spring. When the pre-determined pressure is reached, the valve

Printed in England
© Rolls-Royce Motors Limited 1978
August 1978
T.S.D. 4200

opens against the resistance of the spring and allows fuel to return to the inlet (suction) side of the pump.

A coarse filter is included in the inlet to the suction chamber and may require cleaning under exceptional circumstances.

Pierburg fuel pump assembly - To remove (see Fig. K31)

1. Drive the car onto a ramp.
2. Ensure that the parking brake is firmly applied.
3. Remove the gear range selector thermal cut-out from the fuseboard.
4. Disconnect the battery.
5. Carry out the necessary workshop safety precautions.
6. Raise the ramp to a convenient working height.
7. Unscrew and remove the nut securing the white/pink electrical cable to the terminal stud; withdraw the cable.
8. Unscrew and remove the nut securing the earth braid cable to the terminal stud; withdraw the cable.
9. Unscrew the worm drive clips securing both the fuel inlet and outlet hoses to the pump assembly. Withdraw both hoses and suitably blank the open connections.
10. Unscrew and remove the three 7/16 in. A/F nuts and washers securing the pump and stone guard to the flexible rubber mounts.
11. Withdraw the pump assembly.

Pierburg fuel pump assembly - To fit

Fit the fuel pump assembly by reversing the procedure given for removal.

Pierburg fuel pump assembly - To dismantle (see Fig. K32)

When a fuel pump is found to be faulty, a new or reconditioned pump **should** be fitted.

If a fuel pump requires dismantling for cleaning purposes, proceed as follows.

1. Remove the pump from the car.
2. Unscrew and remove the three setscrews from the bottom bearing plate. Hold the plate in position.
3. Turn the pump upside down and remove the plate.
4. Withdraw the rotor, vanes, stator and upper bearing plate.
5. Withdraw the bottom of the pump assembly from the motor drive assembly, collect the 'O' ring.
6. Remove the drive-shaft and ball bearing. Care should be taken not to lose the ball bearing.
7. If necessary, the coarse filter may be carefully removed from the top of the pump housing.

Pierburg fuel pump assembly - To clean

The fuel pump requires no routine maintenance. However, if the pump is dismantled for cleaning, the parts should be washed in clean paraffin only.

The motor assembly must not be washed although the body casing can be wiped clean.

Pierburg fuel pump assembly - To assemble

Assemble the fuel pump by reversing the procedure given for dismantling, noting the following.

1. Take care when replacing the rotor as it has a stepped internal segment. When correctly fitted the stepped internal segment should be uppermost allowing the drive-shaft to be flush with the bottom of the rotor.

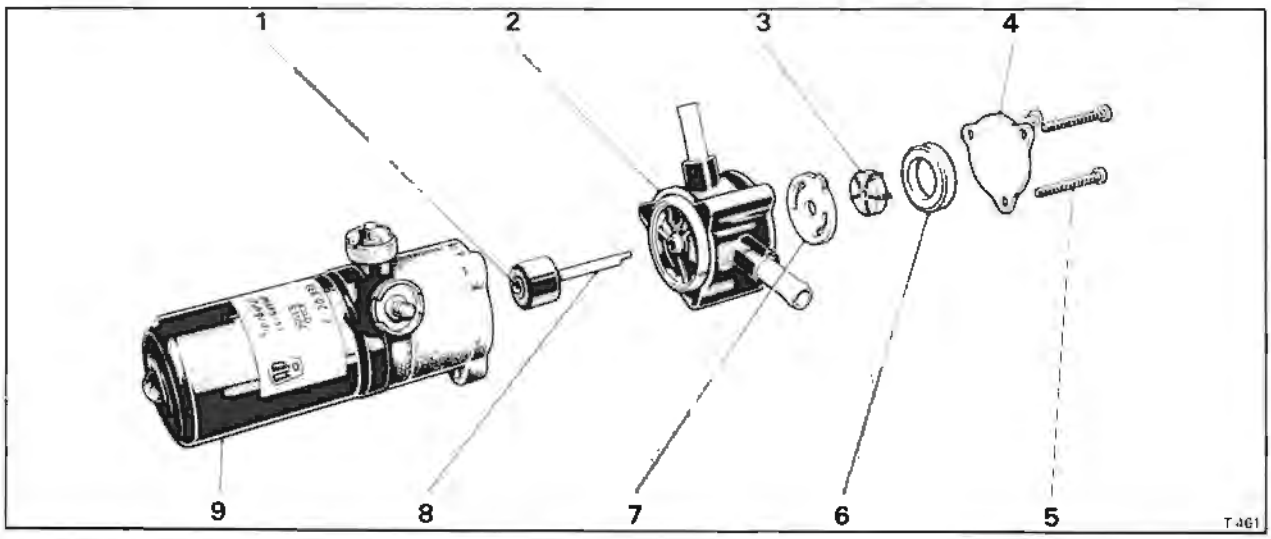

Fig. K32 Pierburg pump - exploded

1 Ball bearing
2 Pump body
3 Rotor and vanes
4 Lower bearing plate
5 Setscrews
6 Stator
7 Upper bearing plate
8 Drive-shaft
9 Motor body

Pierburg fuel pump assembly - To flow test on the car (see Fig. K33)

The fuel pump should deliver approximately 2,27 litres (4.0 Imp pt., 4.8 U.S. pt.) of fuel in one minute at zero suction head pressure and zero suction lift.

1. Position the car on a ramp.
2. Ensure that the parking brake is firmly applied.
3. Remove the gear range selector thermal cut-out from the fuseboard.
4. Disconnect the outlet pipe from the pump.
5. Connect one end of a suitable flexible hose to the fuel pump outlet and the other end to the test equipment.
6. Disconnect the brown/yellow cable from the

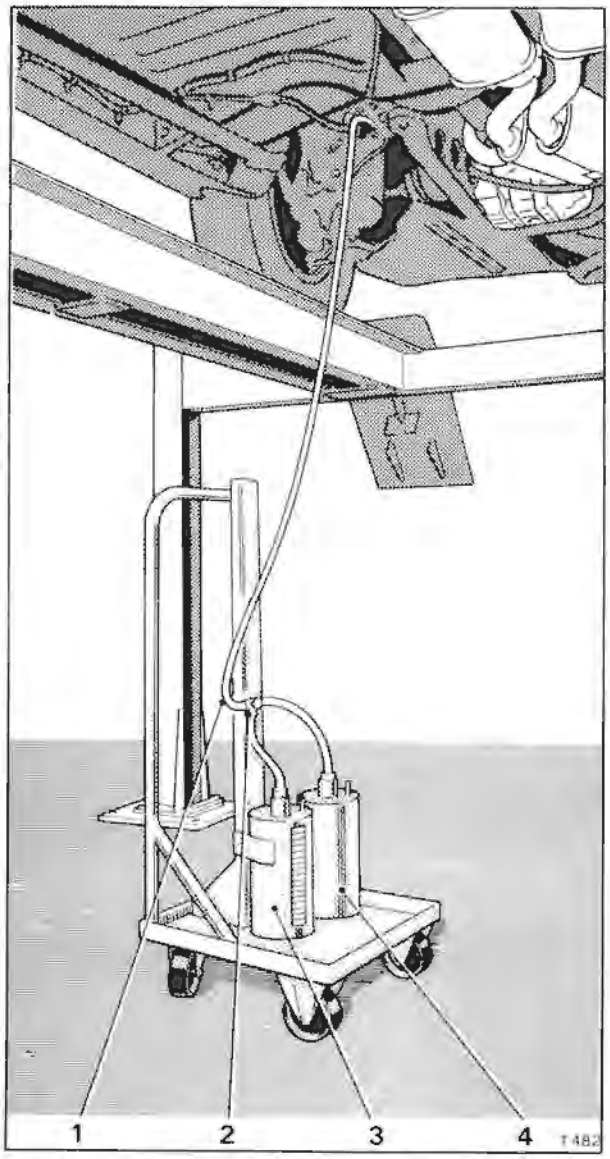

Fig. K33 Pierburg pump - on car testing
1 Pump outlet pipe
2 Flow control valve
3 Measuring container
4 Auxiliary container

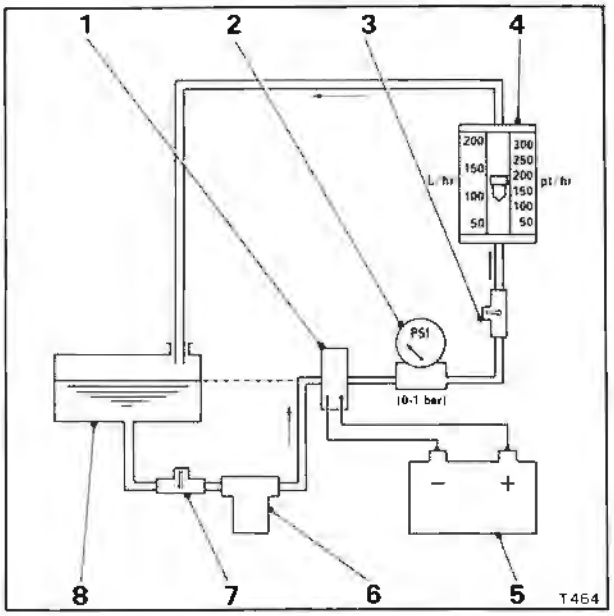

Fig. K34 Pierburg pump flow test rig - off car testing
1 Fuel pump
2 Pressure gauge
3 Flow control valve
4 Flow meter - rotameter type
5 12v battery (fully charged)
6 Filter
7 On/off tap
8 Paraffin reservoir 5 litres (9 Imp. pt.,10.5 U.S. pt.) min. capacity

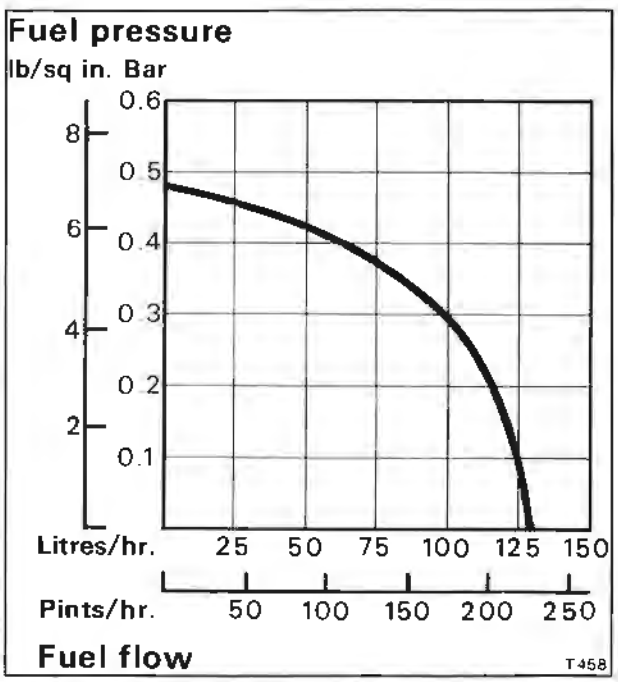

Fig. K35 Graph - min pump performance (zero suction head)

Printed in England
© Rolls-Royce Motors Limited 1978
August 1978
T.S.D. 4200

outer pressure switch on the oil filter elbow.
7. Switch on the ignition, allow the pump to operate normally for fifteen seconds, then measure the fuel output for one minute. An output of 1,7 litres (3.0 Imp. pt., 3.6 U.S. pt.) is acceptable.

Pierburg fuel pump assembly - To flow test on a rig
The fuel pump should be tested as shown in Figure K34. The pump should be sited on the same level as the paraffin in the reservoir and deliver 2,27 litres (4.0 Imp. pt., 4.8 U.S. pt.) of paraffin in one minute, at zero suction head pressure and zero suction lift. If the fuel pressure is increased by the control valve, the flow should be checked against the flow details given in Figure K35.

Printed in England
© Rolls-Royce Motors Limited 1978
November 1978
T.S.D. 4200

Section K4

Fuel lines and Ancillary equipment

This section contains details of the components within the fuel system that are fitted between the fuel tank and carburetters (with the exception of the fuel pumps).

If it is necessary to open any of the fuel lines it is most important to ensure that the workshop safety precautions listed in Chapter A (i.e. no smoking, fire extinguishers, battery disconnected etc.) are strictly adhered to.

The components included in this section are listed below and their positions relative to the fuel system illustrated in Figure K1.

Fuel filter (main)
Check valve
Fuel cooler
Fuel recirculation valve
One-way valve
Fuel lines

Fuel filter (main)
Access to the filter is from beneath the car. The filter is mounted either below the forward edge of the luggage compartment floor or to the rear face of the centre crossmember, dependent upon the car's intended domicile (see Figs. K36 and K37).

At the service intervals specified the fuel filter element should be discarded and a new one fitted.

Fuel filter - Element replacement
1. Carry out the necessary workshop safety precautions.
2. Slacken the worm drive clips on each side of the filter top cover and withdraw the inlet and outlet pipes. Blank off the pipes to prevent loss of fuel or ingress of dirt.
3. Remove the two nuts, bolts and washers securing the filter to the mounting bracket and lower the filter from the car.
4. Using a thick bladed screwdriver unscrew the three screws securing the top cover, collect the screws and withdraw the filter bowl.
5. Drain the fuel from the filter bowl.

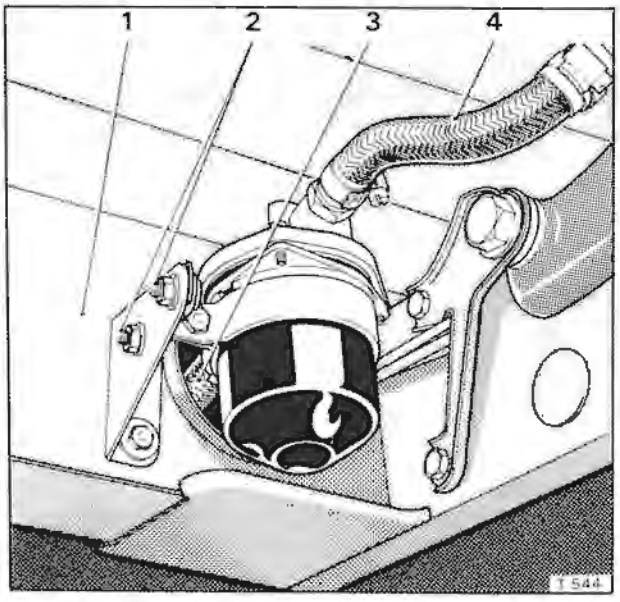

Fig. K36 Rear fuel filter (main) - Cars destined for countries other than Canada, Japan and the U.S.A.
1 Centre crossmember
2 Filter securing bolts
3 Outlet pipe
4 Inlet pipe

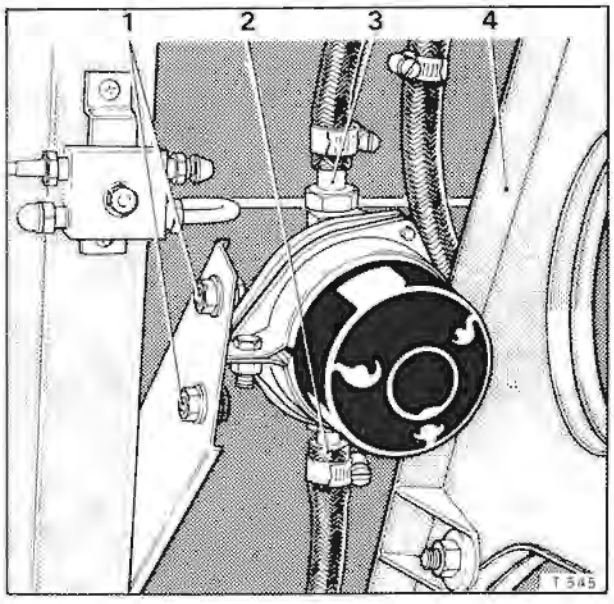

Fig. K37 Rear fuel filter (main) - Cars destined for Canada, Japan and the U.S.A.
1 Filter securing bolts
2 Outlet pipe
3 Inlet pipe
4 Torque arm

6. Withdraw the filter element. Resistance may be felt due to the tight fit of the element on the rubber 'O' ring located on the centre (outlet) spigot.
7. Thoroughly clean the filter bowl.
8. Fit a new element by reversing the procedure given for removal. Ensure that new rubber sealing rings are fitted.

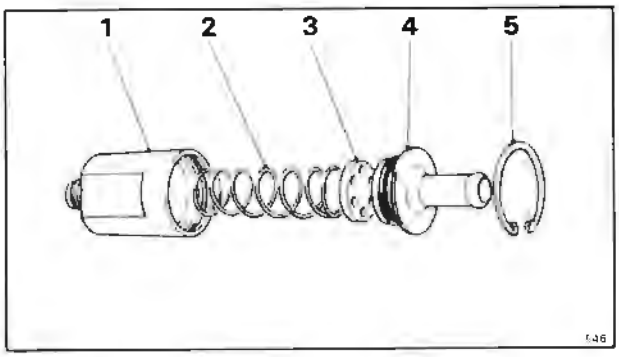

Fig. K38 Check valve
1 Valve body
2 Spring
3 Seating disc
4 Adapter
5 Circlip

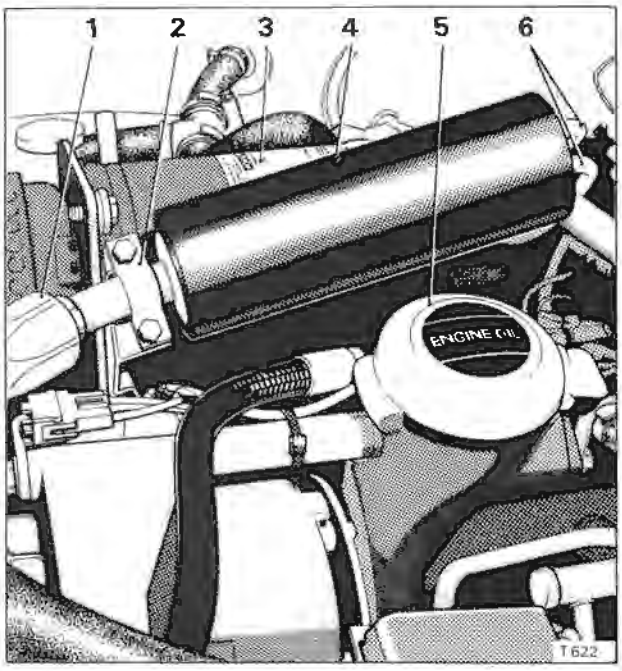

Fig. K39 Fuel cooler
1 Flexible refrigeration pipe
2 Front securing clip
3 Refrigeration compressor
4 Fuel cooler
5 Engine oil filler cap
6 Inlet and Outlet fuel pipes

Check valve (see Fig. K38)
The check valve (if fitted) is situated in the fuel feed line forward of the rear crossmember.

Fuel under pressure from the pump, moves the small valve from its seating and passes through the holes in the valve disc. When the pump is not operating, the fuel pressure drops and a spring returns the valve disc to the adapter face, thus sealing the feed line.

Check valve - To remove and fit
1. Carry out the necessary workshop safety precautions.
2. Slacken the worm drive clip and remove the inlet pipe. Blank off the pipe to prevent loss of fuel or ingress of dirt.
3. Holding the valve body with a $^{15}/_{16}$ in. A/F open ended spanner, slacken the outlet fuel pipe nut using a $^{5}/_{8}$in. A/F spanner, remove the check valve and blank off the pipe.
4. Fit the check valve by reversing the removal procedure.

Check valve - To dismantle
1. Remove the check valve from the car.
2. Remove the circlip from the inlet end.
3. Detach the adapter from the valve body. Take care as the adapter is withdrawn as this will release the slight pressure on the internal spring.
4. Withdraw the seating disc and spring.

Check valve - To assemble
Assemble the valve by reversing the procedure given for dismantling, noting the following.
1. Ensure a new 'O' ring is fitted to the adapter.

Check valve - To clean
When the valve has been dismantled it may be cleaned using either clean fuel or paraffin.

Fuel cooler (see Fig. K39)
The fuel cooler operates when the air conditioning system is switched on. However, cars produced to the 'high altitude' specification for North America have a by-pass loop around the air conditioning facia switch, this allows the cooler to operate at all times, subject to certain temperature and air conditioning system limitations.

Operation
The fuel cooler is basically a chamber around which cold refrigerant is circulated; into this chamber the fuel pipe is looped. Therefore, the temperature of the fuel is reduced before it reaches the carburetters.

Fuel cooler - To remove
1. Depressurize the refrigeration system (see Chapter C).
2. Unscrew both inlet and outlet fuel pipe unions using $^{7}/_{16}$in. Whit. and $^{5}/_{8}$in. A/F spanners.

3. Disconnect the flexible refrigeration pipe from the fuel cooler outlet using a ⅞ in. A/F spanner.
4. Using a 7/16 in. A/F spanner, unscrew the bolt fitted through the securing plate on the rear of the refrigeration compressor; withdraw the bolt and plate.
5. Using a 7/16 in. A/F spanner, unscrew the nuts securing the cooler pipe clip to the front of the compressor. Collect the nuts, washers, clip and bolts. Withdraw the fuel cooler and collect the 'O' ring from the compressor connection.

Fuel cooler - To fit
Fit the fuel cooler by reversing the procedure given for removal, noting the following points.
1. Ensure a new 'O' ring is fitted to the refrigeration compressor pipe connection.
2. Charge the refrigeration system as described in Chapter C.

Fuel recirculation valve (restrictor) (see Fig. K40)
On cars fitted with a fuel recirculation system a fuel recirculation valve is fitted in 'A' bank carburetter outlet fuel pipe. The valve restricts the flow of fuel returning to the tank by metering it through a small hole of 1,88 mm. (0.074 in.) diameter; this maintains the required pressure in the fuel feed side of the system.

Fuel recirculation valve - To remove and fit
1. Hold the recirculation valve using a ¾ in. A/F open ended spanner and slacken the outlet fuel pipe nut with a ⅝ in. A/F spanner. Unscrew the nut and withdraw the pipe.
2. Slacken the recirculation valve and withdraw it from 'A' bank carburetter filter housing.
3. To fit the recirculation valve reverse the removal procedure.

Non-return valve (see Fig. K41)
The operation of the Pierburg one-way valve is described in Section K1 and is only fitted to cars with a fuel recirculation system. It is manufactured from fuel resistant nylon. The valve is a non-serviceable unit and if its operation is suspect a new assembly should be fitted. The fuel flow is indicated by the directional arrow embossed on the valve body.

Access to the valve is from beneath the car and its location is in the fuel return line just prior to the fuel tank.

Non-return valve - To remove
1. Carry out the necessary workshop safety precautions.
2. Clamp the rubber fuel pipe before and after the valve.
3. Slacken the worm drive clips either side of the valve and withdraw the pipes.
4. Blank off the open pipe connections if the new valve is not fitted immediately.

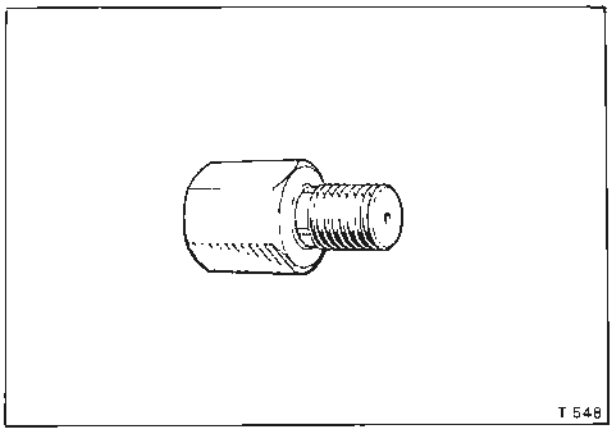

Fig. K40 Fuel recirculation valve (restrictor)

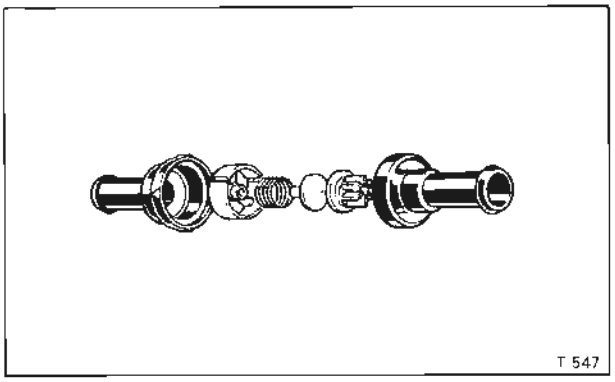

Fig. K41 Non return valve

Non-return valve - To fit
To fit the non-return valve reverse the procedure given for removal, noting the following point.
1. Ensure that the valve is fitted the correct way around; fuel flow directional arrows are situated on the valve body.

Fuel lines
The fuel lines comprise metal bundy tubing and reinforced petrol resistant rubber.

On cars with a fuel recirculation system the feed line is 7,94 mm. (5/16 in.) outside diameter. The outside diameter of the return line is 9,53 mm. (⅜ in.).

On all other fuel systems the outside diameter of the fuel lines is 9,53 mm. (⅜ in.).

Metal piping is used where possible and is attached to the body and inner longeron etc., by metal clips (with rubber inserts) and self-tapping screws.

Rubber piping is used where a joint, component, or flexibility is required.

The various systems are illustrated in Figure K1.

Printed in England
© Rolls-Royce Motors Limited 1978
November 1978
T.S.D. 4200

Section K5

Carburetters and Automatic choke

Solex 4AI carburetter	Page
Description	K5 - 3
Throttle body	K5 - 4
Carburetter housing	K5 - 5
Carburetter cover	K5 - 6
Operation	K5 - 7
The float system	K5 - 7
Automatic choke	K5 - 7
Idling system	K5 - 9
The main jet systems	K5 - 9
Acceleration pump system	K5 - 10
Carburetter overhaul	K5 - 11
To remove	K5 - 11
To fit	K5 - 12
To dismantle	K5 - 12
To clean	K5 - 16
To inspect	K5 - 16
To assemble	K5 - 16
Service adjustments	K5 - 16
Fuel filter	K5 - 18
Prior to adjustment	K5 - 18
Idle mixture setting	K5 - 19
Fast-idle setting	K5 - 20
Throttle jack/damper setting	K5 - 20
Float chamber fuel level	K5 - 21
Automatic choke pulldown	K5 - 22
Acceleration pump	K5 - 22
Automatic choke bi-metal	K5 - 23
Secondary stage air flaps return spring	K5 - 23
Secondary stage throttle return spring	K5 - 23

S.U. HIF7 carburetter	Page
Description	K5 - 23
Float chamber	K5 - 24
Mixture adjustment	K5 - 24
Fuel temperature compensation	K5 - 24
Overrun valves	K5 - 25
Spring loaded jet needle	K5 - 25
Carburetter fuel filter	K5 - 25
Carburetter overhaul	K5 - 27
Carburetter and Air horns assembly - To remove	K5 - 27
Carburetter - To remove	K5 - 27
Carburetter - To dismantle	K5 - 28
Carburetter - To inspect	K5 - 29
Carburetter - To assemble	K5 - 29
Service adjustments	K5 - 30
Float level - To set	K5 - 30
Air valve damper - To top-up	K5 - 30
Prior to adjustment	K5 - 30
Preliminary checks	K5 - 31
Carburetter idle air balance	K5 - 31
Carburetter mixture strength	K5 - 31
Carburetter tamperproofing	K5 - 32
Auxiliary components	K5 - 32
Hot idle mixture compensator	K5 - 32
Weakening device (float chamber depression setting)	K5 - 32
Weakening system cut-out switch	K5 - 35
Anti 'run-on' solenoid	K5 - 35
Weakening system cut-off solenoid	K5 - 36
Automatic choke	K5 - 36
Operation	K5 - 37
Overhaul	K5 - 37
Settings during assembly	K5 - 39
Fast - idle	K5 - 40
Choke stove pipe	K5 - 41

Printed in England

© Rolls-Royce Motors Limited 1978

Printed in England
© Rolls-Royce Motors Limited 1978
December 1978
T.S.D. 4200

Section K5

Carburetters and Automatic choke

Two different carburation systems are used dependent upon the specification of the vehicle. Either a Solex 4A1 or twin S.U. HIF7 carburetters are fitted, both have an automatic choke system.

For details of the carburetter(s) fault diagnosis, refer to Section K8.

Solex 4A1

Description

The Solex 4A1 carburetter (see Fig. K42) is a four barrel, two stage down draught carburetter. Two barrels combine to become the first or primary stage and the other two barrels form the secondary stage.

In the primary stage the throttle butterflies are operated directly whereas, the secondary stage butterflies depend upon the throttle lever of the primary stage after the lock of the automatic choke mechanism has disengaged.

The primary or first stage jet system is equipped with fixed fuel and air correction jets whereas, the secondary stage has variable (needle controlled) fuel jets.

There are three main parts to the carburetter, namely, the throttle body, the carburetter housing and the carburetter cover.

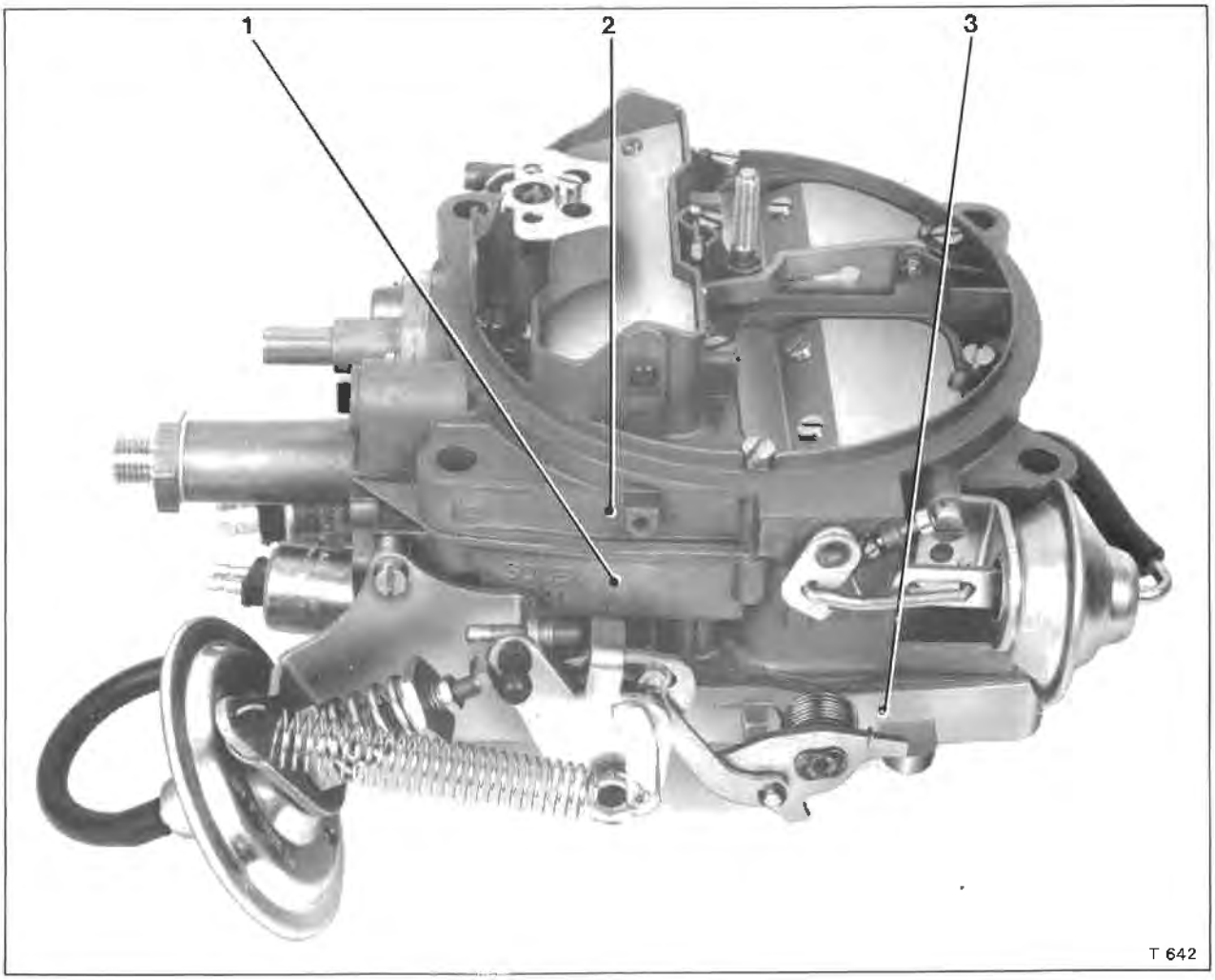

Fig. K42 Solex 4A1 carburetter

1 Carburetter housing 2 Carburetter cover 3 Throttle body

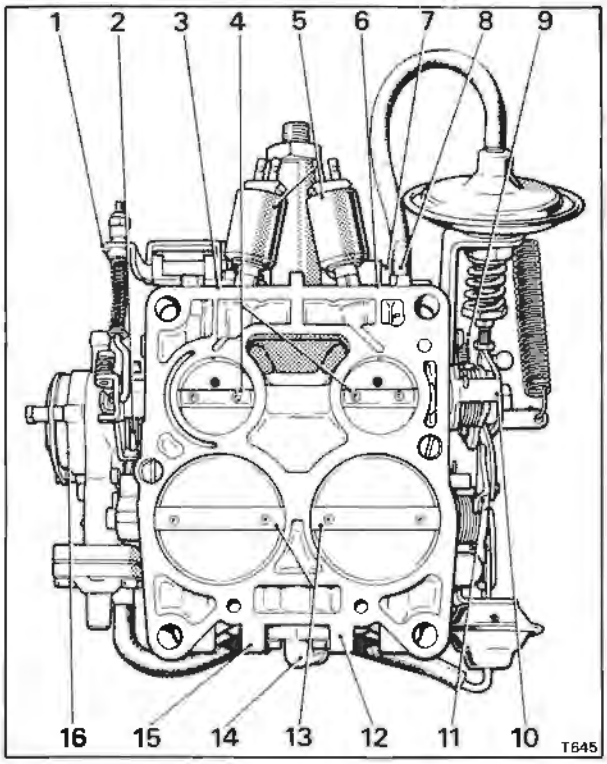

Fig. K43 Throttle body

1 Acceleration pump lever
2 Fast-idle lever
3 Location of idle mixture regulating screw
4 Primary stage throttle spindle
5 Anti 'run-on' solenoids
6 Location of idle mixture regulating screw
7 Vacuum advance capsule tapping (hidden)
8 Throttle damper/jack vacuum tapping
9 Idle stop screw
10 Primary stage throttle lever
11 Secondary stage throttle lever
12 Air flap damper vacuum tapping
13 Secondary stage throttle spindle
14 Speed control unit vacuum tapping
15 Choke pulldown vacuum tapping
16 Automatic choke assembly

Throttle body (see Fig. K43)

The throttle body is the lowest part of the carburetter assembly. Supported in this assembly are the two butterfly spindles, one for the primary stage (item 4) and one for the secondary stage (item 13). These spindles rotate in opposite directions and carry their respective butterfly valves which are retained by screws.

On one end of the primary stage butterfly spindle is located the throttle lever assembly (item 10) and on the other end of this spindle is situated the operating rod for the primary stage acceleration pump (item 1) and the lever (item 2) for the stepped disc of the automatic choke mechanism.

The secondary stage butterfly spindle carries its part of the throttle lever assembly (item 11) on

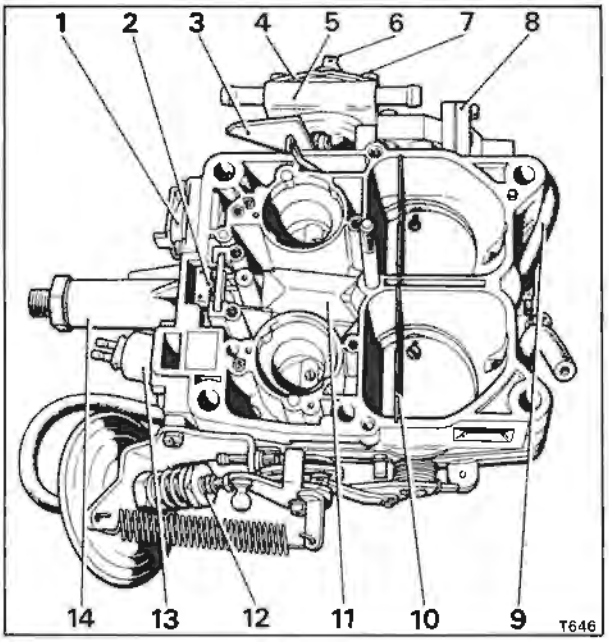

Fig. K44 Carburetter housing

1 Acceleration pump
2 Float needle valve
3 Fast-idle lever
4 Automatic choke bi-metal assembly
5 Engine coolant chamber
6 Bi-metal electrical terminal
7 Bi-metal retaining screws
8 Automatic choke pulldown unit
9 Choke pulldown vacuum hose
10 Deflector
11 Float
12 Throttle damper/jack
13 Anti 'run-on' solenoid
14 Fuel filter housing

one end and at the other end, a small pin which by means of a catch prevents the secondary butterflies opening under certain conditions of choke operation.

At the front of the throttle body and operating in conjunction with the primary stage, are two idling mixture regulating screws (items 3 and 6) and adjacent, are located two anti 'run-on' solenoid valves (item 5) which cut off the fuel supply in the idling gallery of the carburetter when the ignition is switched off. There are two tubes pressed into the front of the throttle body one above the other, these are used for tapping the depression; the upper connection (item 7) is for the ignition distributor vacuum advance capsule and the lower (item 8) for the diaphragm unit of the vacuum throttle damper jack.

At the rear of the assembly there are three connections for tapping the inlet manifold depression, the large centre take-off (item 14) is the connection for the vehicle speed control system; of the other two smaller connections, one containing a restrictor is the vacuum signal for the choke pulldown

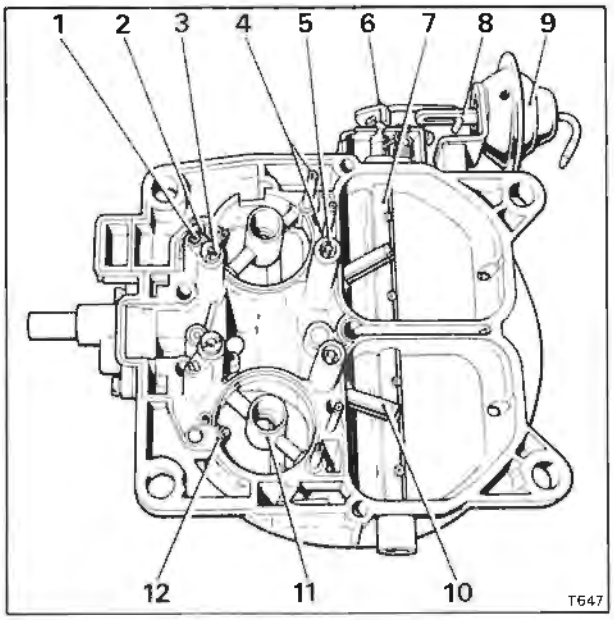

Fig. K45 Carburetter cover (inverted view)

1 Idling jet screw
2 Primary fuel jet housing
3 Primary main fuel jet
4 Riser tubes
5 Secondary main fuel jet
6 Damper lever
7 Secondary air flap spindle
8 Damper linkage
9 Damper unit
10 Secondary discharge tube
11 Primary discharge branches/diffuser
12 Acceleration pump discharge jet

mechanism (item 15) and the other the vacuum signal for the secondary stage air flap damping device (item 12).

The throttle body is fixed to the carburetter housing by means of two cheesehead screws, with a gasket fitted between the two parts.

Carburetter housing (see Fig. K44)

The carburetter housing comprises four mixing chambers and the float chamber. The float chamber contains the float (item 11) with its linkage and a needle valve assembly (item 2).

In the mixing chambers of the primary/first stage are the choke tube inserts. Each of the two secondary stage mixing chambers is divided by a deflector (item 10).

At the side of the housing is situated the automatic choke and pulldown mechanism (item 8). Within the main part of the automatic choke is housed the bi-metal assembly (item 4) which is heated electrically and by hot engine coolant dependant upon the starting conditions. Within this bi-metal housing and riveted to the end of the spindle is the intermediate lever. Also on the spindle but located between the bi-metal housing

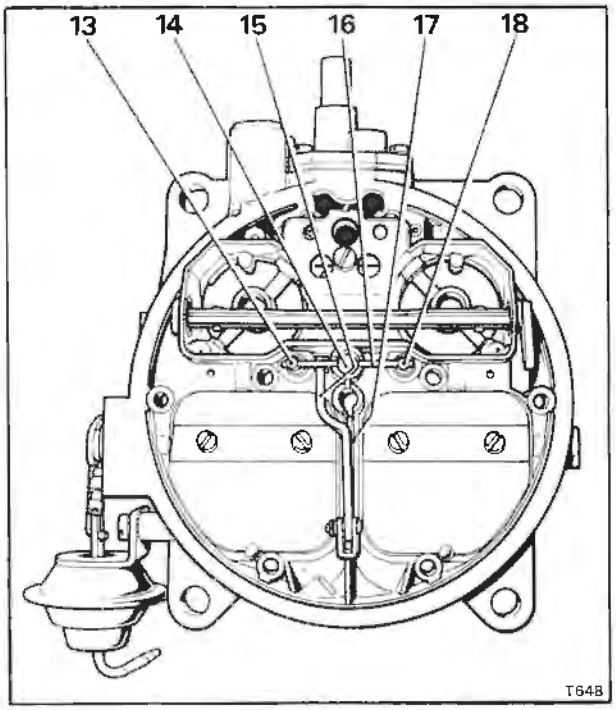

Fig. K46 Carburetter cover

13 Secondary jet needle
14 Guide pin
15 Transfer lever
16 Transverse rod
17 Cam disc (hidden)
18 Secondary jet needle

and carburetter housing is located a bush which carries on its inner face a lever (item 3) that has the fast-idle notched segment cam at one end, whilst the other end is designed as a weight to release the fast-idle mechanism.

A rod situated within the body connects the choke pulldown unit to the intermediate lever. A hose (item 9) connects the depression in the throttle body with the choke pulldown unit.

In the upper part of the bi-metal housing there is an engine coolant chamber (item 5) with feed and return connections.

The bi-metal cover (item 4) is provided with a ceramic insert, which also carries the heating coil and the bi-metal spring; on the outside of the cover is the electrical terminal (item 6). The cap is retained in the bi-metal housing by means of a holding plate, three small screws (item 7) and three plastic spacer bushes.

The secondary throttle lock-out lever is supported on a pivot on the carburetter housing.

At the front of the carburetter housing is the fuel filter housing (item 14), the connection with the fuel feed pipe is by a threaded adapter, behind which is located a nylon mesh filter. Adjacent is located the primary stage acceleration pump (item 1). this consists of a pump lever with pivot spindle, pump cover, pump gasket/diaphragm with centre

Printed in England
© Rolls-Royce Motors Limited 1978
December 1978
T.S.D. 4200

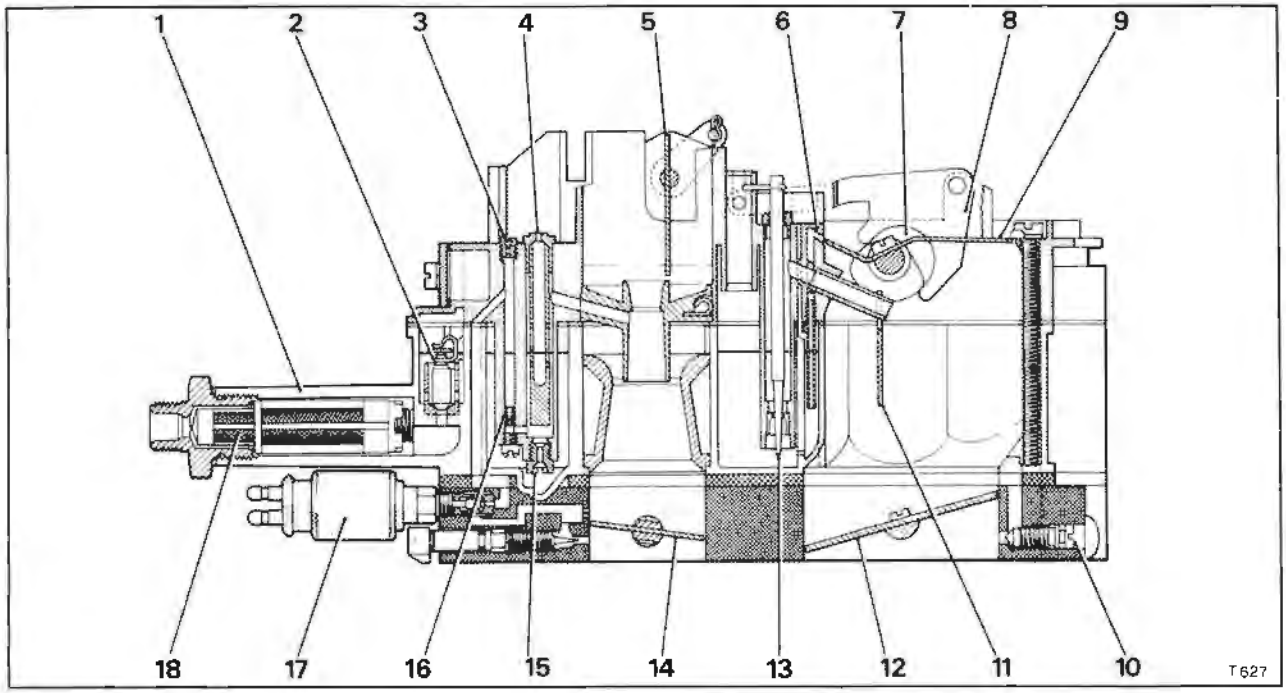

Fig. K47 Solex 4A1 (cross section)

1 Fuel filter housing
2 Needle valve
3 Idling air correction jet
4 Primary air correction jet
5 Choke strangler flap
6 Secondary riser passage
7 Cam
8 Cam lever
9 Secondary air flap
10 Secondary air balance screw
11 Deflector
12 Secondary throttle butterfly
13 Secondary needle
14 Primary throttle butterfly
15 Primary main fuel jet
16 Idling fuel jet
17 Anti 'run-on' solenoid
18 Fuel filter

disc and operating spindle, return spring and finally a plastic cap. A ball valve is fitted into the fuel supply to the acceleration pump chamber; other ball valves are fitted between the acceleration pump and each of the primary stage mixing chambers.

Three cheesehead screws retain the throttle damper/jack (item 12) via a mounting plate to the side of the carburetter housing. In addition, the mounting plate also carries the 'fixed' idle stop screw.

Carburetter cover (see Figs. K45 and K46)

The carburetter cover is fitted on top of the carburetter housing and secured by cheesehead screws of differing lengths. The fuel jet housings for the main jet system of the primary and secondary stages and of the idling system (primary stage) are cast as an integral part to the underside of the cover. Discharge branches with inner venturii for the primary stages are fitted into the mixing tube housings.

The two jet housings (item 2) of the idling system which are connected to the housings of the main primary system, have pressed-in jets enclosed by screws (item 1). The two housings (item 5) for the main jet system of the secondary stage have pressed-in inserts, their areas being governed by tapered needles.

The discharge tubes and branches (items 10 and 11) of the main jet systems of both primary and secondary stages, and the riser tubes (item 4) are pressed into position.

The choke strangler plate is carried by the spindle in the upper part of the primary stage; this spindle is connected by levers and a rod to the automatic choke spindle.

Across the two mixing chambers of the secondary stage is fitted a spindle (item 7) carrying the air flaps, to this spindle is secured a lever (item 6) and rod, the rod being suspended in the slot of the damper device rod. The damping device (item 9) is secured to the carburetter cover by means of a mounting plate and a cheesehead screw. A hose transmits the vacuum signal to the diaphragm unit from the connection in the throttle body. The air flaps spindle is closed by a return spring mechanism situated adjacent to the damping device.

The jet needles (item 18) of the secondary stage hang on a transverse rod (item 16) supported by a guide pin (item 14) that slides in a vertical bore, the assembly is operated by a transfer lever (item 15) which in turn is actuated by a cam (item 17) attached to the secondary stage spindle air flap.

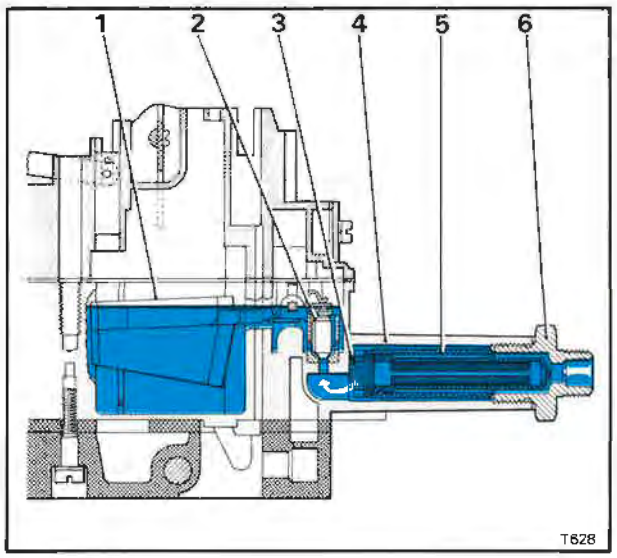

Fig. K48 Float system
1 Float assembly
2 Needle valve
3 Spring
4 Fuel filter housing
5 Fuel filter
6 Adapter

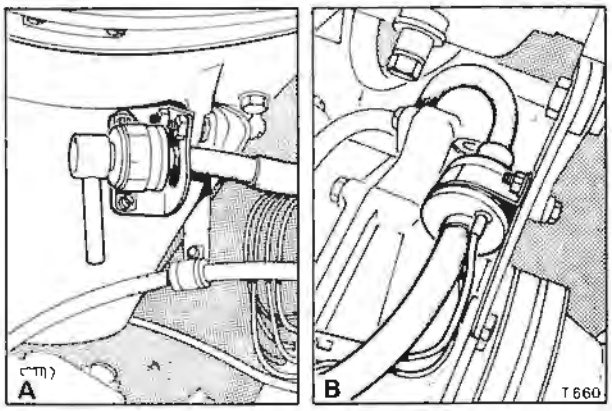

Fig. K49 Locations of the float chamber vent valve
A Bell housing bottom cover
B Refrigeration compressor

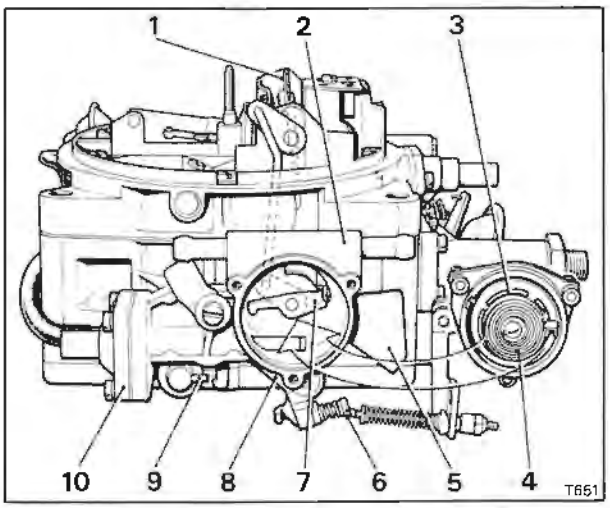

Fig. K50 Automatic choke mechanism
1 Choke strangler
2 Engine coolant chamber
3 Electrical heating element
4 Bi-metal spring
5 Fast-idle counterbalance lever
6 Fast-idle speed adjustment screw
7 Intermediate lever
8 Stop lever
9 Secondary stage lock-out pin
10 Choke pulldown

Operation

The float system

The float system (see Fig. K48) provides a constant level of fuel within the carburetter.

Fuel delivered by the fuel pump(s) assembly enters the float chamber via the filter (item 5) and the open float needle valve. As the fuel level within the float chamber rises, the float moves upwards and this movement is transmitted through the float linkage to the float needle. When the pre-set fuel level is reached the float linkage moves the float needle onto the valve seat and cuts off the flow of fuel. When fuel is drawn from the float chamber, the fuel level falls, the float moves in a downwards direction actuating the linkage and allows fuel under pressure from the pump(s) assembly to lift the needle valve from its seat and flow into the float chamber. Ventilation of the float chamber fuel vapour is either.

(a) via a hose to a vent valve (see Fig. K49) and internally to the air filter/silencer assembly

or

(b) the internal means only.

The fuel level inside the float chamber is adjustable and if necessary should be set in accordance with the instructions given in the 'Service adjustments' section.

Automatic choke

(1) General operation

To bring the mechanism into operation the accelerator should be depressed once and then released before attempting to start the engine.

The bi-metal (item 4) of the automatic choke (see Fig. K50) is heated electrically (dependant upon the ignition being switched on) and by engine coolant (as the temperature of the engine coolant rises).

When the engine is cold, the choke strangler flap (item 1) above the primary stage is held closed

Printed in England
© Rolls-Royce Motors Limited 1978
December 1978
T.S.D. 4200

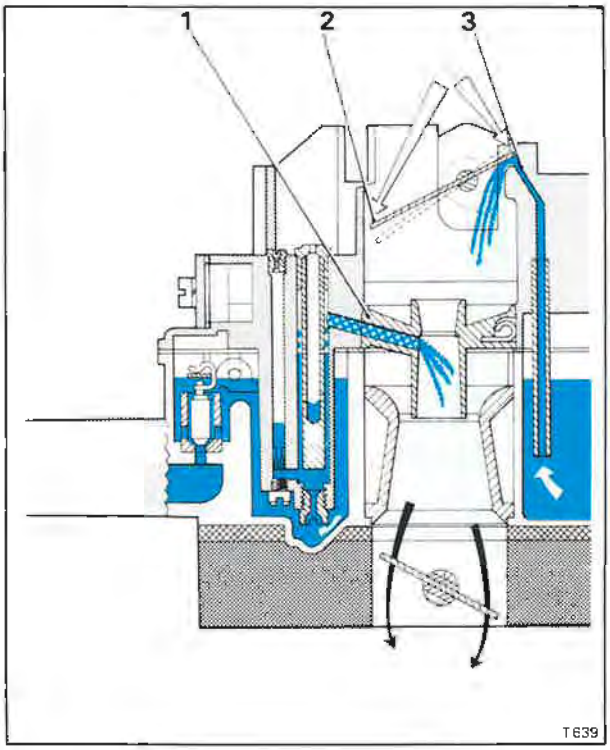

Fig. K51 Automatic choke - mixture flow
1 Primary discharge tube
2 Choke strangler flap
3 Primary riser discharge tube

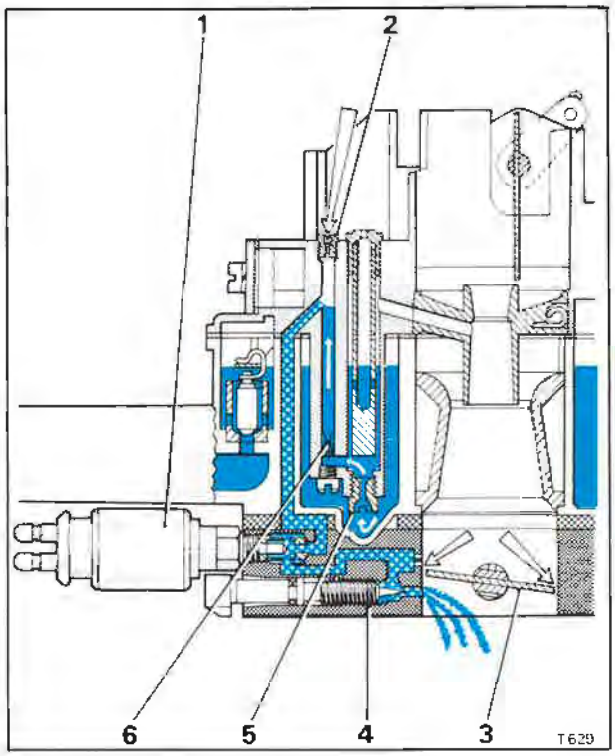

Fig. K52 Idling system
1 Anti 'run-on' solenoid valve
2 Air jet
3 Primary stage throttle butterfly
4 Idle mixture regulating screw
5 Main fuel jet (primary stage)
6 Idle fuel jet

via a mechanical linkage, the tension of the choke bi-metal spring (item 4) being applied to the intermediate lever (item 7).

As the cold engine starts (see Fig. K51), the depression created in the primary stage mixing chambers below the choke strangler flap will draw in fuel from the discharge branch tubes. Manifold depression acts upon the choke pulldown diaphragm and opens the choke strangler flap to the pulldown setting. This allows sufficient air required for the starting mixture to flow past the strangler into the mixing chambers; additional fuel is drawn into the mixing chambers through the primary riser discharge tubes for a limited period.

With the heating-up of the choke bi-metal spring, the choke strangler flap begins to open and the fuel mixture strength weakens until at normal engine operating temperature the choke strangler flap is fully opened.

(2) Pulldown unit

Working in conjunction with the automatic choke is the depression controlled choke pulldown.

Once the engine has started, this device which is arranged in a separate housing alongside the automatic choke bi-metal, tries to open the choke strangler flap against the closing force of the bi-metal spring. This prevents an excessive enrichment of the starting mixture. Under these conditions, the high inlet manifold depression that is evident below the almost closed throttle butterflies, is transmitted via a hose to the choke pulldown diaphragm (see Fig. K50, item 10). As the diaphragm flexes a rod is moved against the bi-metal spring pressure and pulls the automatic choke intermediate lever so that the choke strangler valve is opened by a pre-set amount.

The automatic choke pulldown gap is adjustable and if necessary should be set in accordance with the instructions given in the 'Service adjustments' section.

(3) Fast-idle mechanism

When the engine is started from cold, a rich mixture is necessary to avoid hesitation or stalling on driveaway. This is achieved by the relatively slow response of the choke bi-metal which controls the strangler plate to give a progressively weaker mixture as the engine warms-up. As this initially rich mixture would cause the engine to run unevenly at idle, a fast-idle mechanism is fitted to overcome the condition.

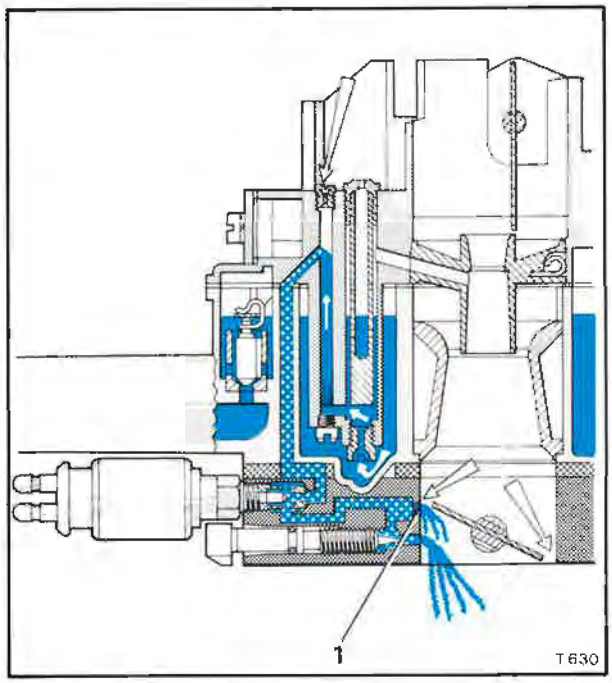

Fig. K53 Progression from idling system
1 Progression port

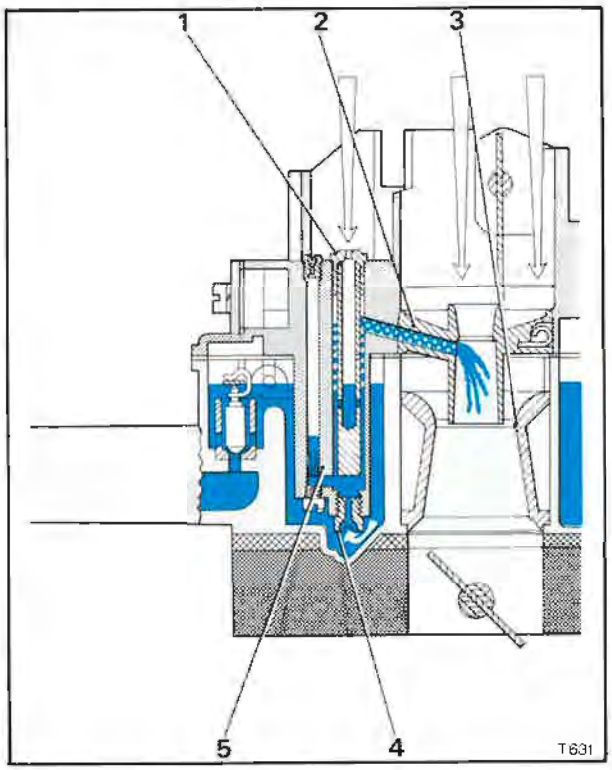

Fig. K54 Primary stage
1 Air correction jet
2 Discharge branch tube
3 Mixing chamber
4 Main jet
5 Mixing tube housing

When the accelerator pedal has been fully depressed prior to cold starting, the stop lever (see Fig. K50, item 8) attached to the primary throttle spindle is in contact with the high step of the fast-idle cam.

On starting therefore, the throttles will be opened beyond the normal idle position giving a higher idle speed. As the engine warms-up, opening the throttles beyond the fast-idle position will release the counterweight which in turn, will rotate the fast-idle cam as far as the bi-metal controlled intermediate lever will allow. The stop lever returns to progressively lower steps on the fast-idle cam (giving correspondingly lower idle speeds) until normal operating conditions are attained. However, if the throttles are not opened beyond the fast-idle position during the warm-up period, the stop lever will remain on the high step of the fast-idle cam and the idle speed will not decrease as the engine warms-up.

Idling system

For engine idling, fuel is drawn via the main and idle fuel jets through internal passages in the carburetter cover where it mixes with air drawn through the idle air correction jets. The emulsion (which is the initial blend of fuel and air) then passes through further internal passages in the housing and discharges through ports in the throttle body adjacent to the anti 'run-on' solenoid valves and below the throttle butterflies. This supply of the initial fuel/air mixture is cut-off by the anti 'run-on' solenoid valves when the ignition is switched off. The quantity of idle fuel/air mixture is determined by the idle mixture regulating screws (see Fig. K52, item 4).

The air, required to form the final combustible mixture in the inlet manifold is drawn past the almost closed throttle butterflies (item 3).

The ports situated above the almost closed throttle butterfly valves are progression ports. These discharge fuel emulsion only when the throttle butterflies are opened wider (see Fig. K53) and together with the acceleration pump, serve to improve the transition from the idling system to the main jet system of the primary stage.

The main jet systems

The carburetter has twin primary and secondary stages, however, only the operation of one from each of the stages is described for simplicity.

Fuel is drawn from the float chamber through the primary stage main jet into the mixing tube housing (see Fig. K54, item 5) up to the predetermined level. Air enters through the air correction jet and mixes with the fuel, the depression in the mixing chamber (item 3) then draws this mixture out through the discharge branch (item 2).

Printed in England
© Rolls-Royce Motors Limited 1978
December 1978
T.S.D. 4200

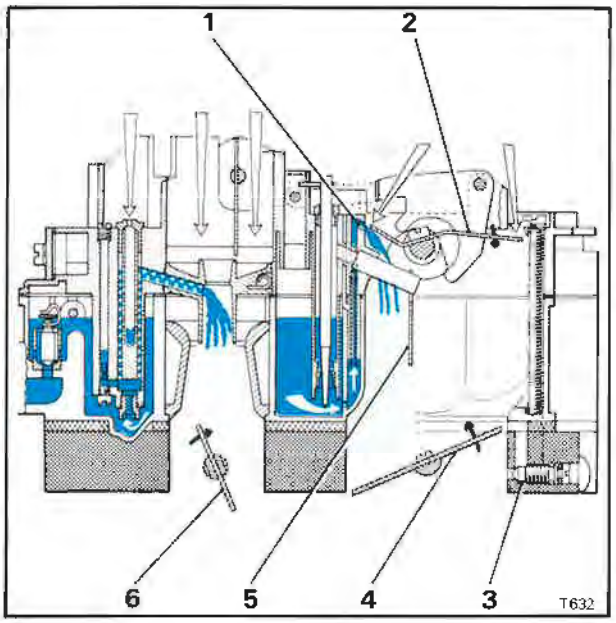

Fig. K55 Secondary stage commencing operation
1 Riser passage
2 Secondary air flap
3 Air balance screw
4 Secondary stage throttle butterfly
5 Deflector
6 Primary throttle butterfly

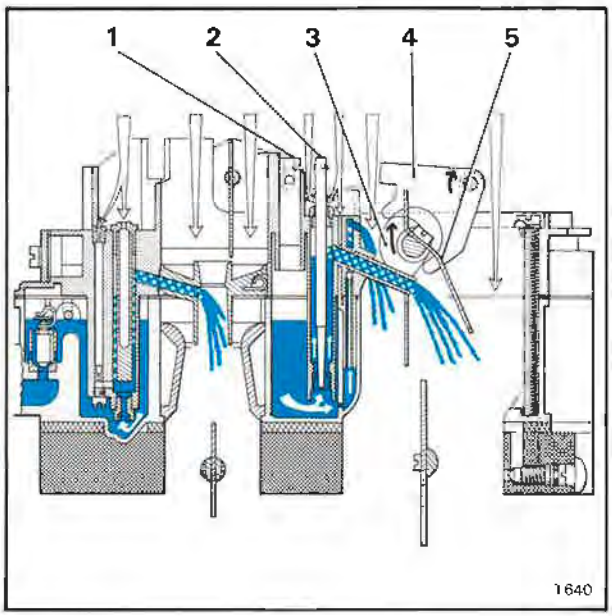

Fig. K56 Secondary stage full operation
1 Guide pin
2 Needle
3 Cam disc
4 Lever
5 Secondary air flap

The flow of air through the secondary stage throttle butterflies is balanced by means of the regulating screws (see Fig. K55, item 3). **These screws are set by the carburetter manufacturer using special equipment, therefore, they must not be adjusted.**

The opening of the secondary stage throttle butterfly is effected by a lever system, when the throttle butterfly of the primary stage has reached approximately three-quarters of its full open travel and the automatic choke mechanism (after opening the choke strangler valve) has released the lock arrangement on the secondary butterfly. A smooth introduction of the secondary stage is achieved by means of additional fuel discharge from the secondary riser passage into each mixing chamber. When the secondary butterfly valve is slightly opened, the mixing chamber depression acts upon the riser passage, drawing fuel from the reservoir connected to the float chamber. This fuel is mixed with air that is drawn past the slightly opened air valve and is deflected to the throttle butterfly gap.

Further progressive opening of the secondary stage throttle butterfly increases the depression in the mixing chamber (see Fig. K56) and opens the air flap which through a cam disc (item 3), a lever (item 4) and a guide pin (item 1) controls the height of the needle (item 2) of the main jet. The amount of fuel discharge depends upon the position of the needle. The correction air enters through the gap between the needle and the air correction jet, it mixes with the fuel which is then drawn through the discharge tube into the mixing chamber.

The secondary air flap is returned to its closed position by a spring (see Fig. K57, item 5), one end of which is attached to a pin pressed into the air flap spindle (item 2) and the other end to an adjustment screw (item 5). The tension of the spring, is set relative to the air flow in the mixing chamber of the secondary stage and is locked by a small screw (item 6). The tension of the spring is adjustable and if necessary should be set in accordance with the instructions given in the 'Service adjustments' section.

Adjacent is the depression controlled air flap damping device (item 3), this assembly damps the air flap movement at sudden openings of the secondary stage throttle butterfly.

Acceleration pump system

The acceleration pump (see Fig. K58) provides additional fuel when the primary throttle butterflies are suddenly opened, giving a smooth transition from the idle system to the main system.

The acceleration pump chamber is filled with fuel from the float chamber. In the rest position the pump spring (item 3) presses on the diaphragm (item 2) which in turn pushes the operating

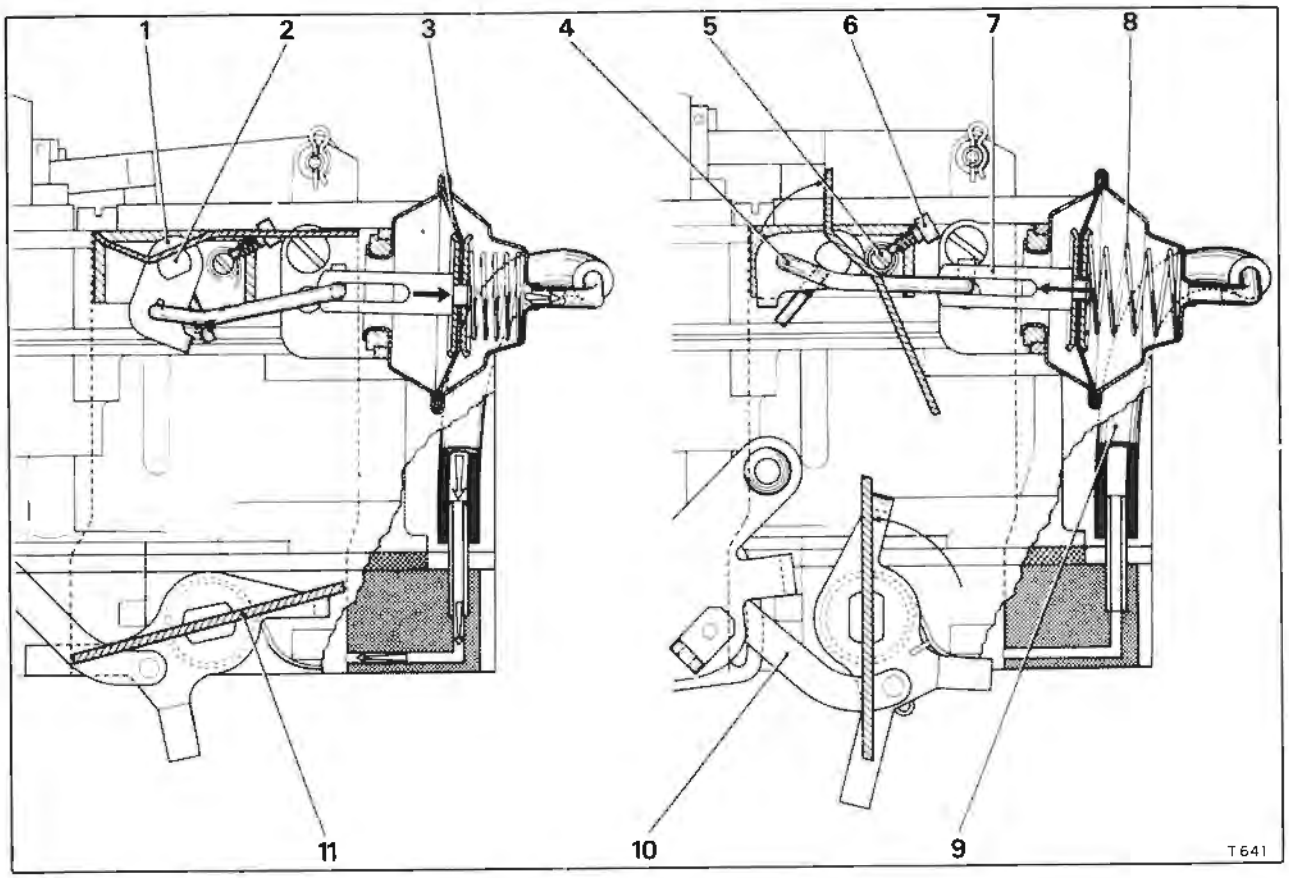

Fig. K57 Secondary stage air flaps damper

1 Lever
2 Air flaps spindle
3 Diaphragm
4 Rod
5 Spring and tension adjuster screw
6 Lock screw
7 Slotted lever
8 Diaphragm spring
9 Vacuum signal hose
10 Throttle lever
11 Secondary stage throttle butterfly

⇨ Vacuum signal
➡ Lever movement

plunger (item 1) against the pump lever (item 4). When the primary stage throttle butterflies are opened the movement is also transmitted to the pump operating lever which then presses the plunger and hence the diaphragm inwards, this action injects fuel through the discharge openings into the mixing chamber of the primary stage.

The quantity of fuel added upon accelerating is determined by the pump stroke which is adjustable by means of the clamping screw (item 5) at the end of the pump rod and if necessary this should be set in accordance with the instructions given in the 'Service adjustments' section. The duration of the injection of fuel is determined by the spring and the size of the discharge openings. A ball valve is arranged in the fuel feed line from the float chamber to the pump chamber, this ball valve prevents the back flow of fuel during the discharge stroke of the pump. Ball valves are also fitted before the discharge openings and prevent air entering the system during the suction stroke of the pump.

Note
When the engine is not running, repeated movement of the accelerator linkage will operate the acceleration pump and inject fuel into the intake system.

Overhaul

Carburetter - To remove

1. Carry out the usual workshop safety precautions.
2. Remove the air cleaner/silencer assembly (see Section K6).
3. Drain the engine coolant (see Chapter L), until the level is below the automatic choke bi-metal housing.
4. Unscrew the worm drive clips and withdraw the coolant feed and return hoses from the bi-metal housing.
5. Disconnect the throttle linkage from the carburetter.

Printed in England
© Rolls-Royce Motors Limited 1978
December 1978
T.S.D. 4200

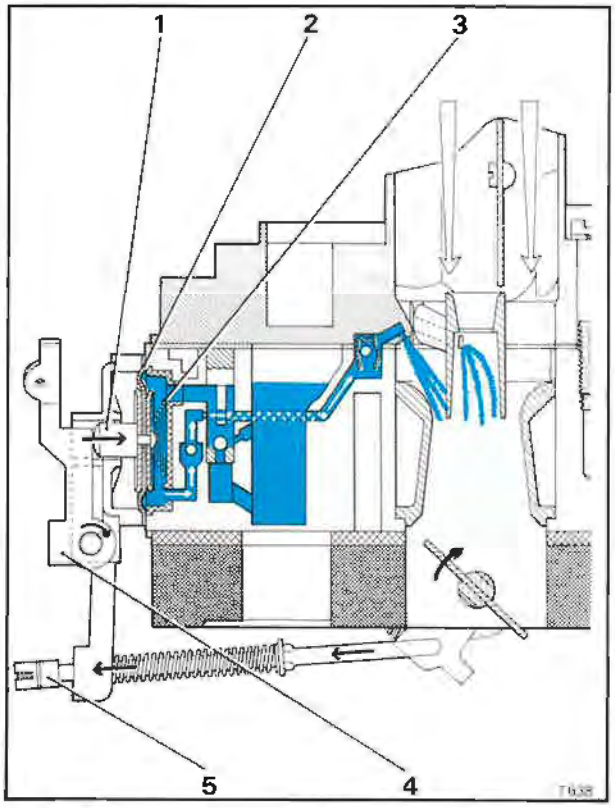

Fig. K58 Acceleration pump operation
1 Operating plunger
2 Diaphragm
3 Spring
4 Operating lever
5 Pump adjusting screw

6. Detach the fuel supply pipe and blank the open connections.
7. Withdraw the float chamber vent hose (if fitted).
8. Detach the following vacuum signal hoses from the carburetter.
(i) distributor vacuum advance capsule.
(ii) speed control unit.
9. Detach the following electrical leads from the carburetter.
(i) choke bi-metal cap.
(ii) anti 'run-on' solenoid valves.
10. Unscrew the four ½ in. A/F nuts retaining the carburetter to the inlet manifold, collect the washers and lift off the carburetter assembly.

Carburetter - To fit

Fit the carburetter by reversing the procedure given for removal noting the following.
1. Ensure that induction manifold and carburetter joint faces are clean and if necessary fit a new gasket/riser.
2. Ensure that the vacuum signal hoses for the distributor vacuum advance capsule, throttle damper/jack, choke pulldown unit, speed control unit and secondary stage air flaps damper are all in good condition and the hose joints 'air tight'.

Carburetter - To dismantle

Dismantling of the carburetter is not recommended as it has been set and balanced by accurate measuring techniques during manufacture.

In isolated instances however, it may be necessary to dismantle the carburetter and under these conditions adhere to the following procedure.

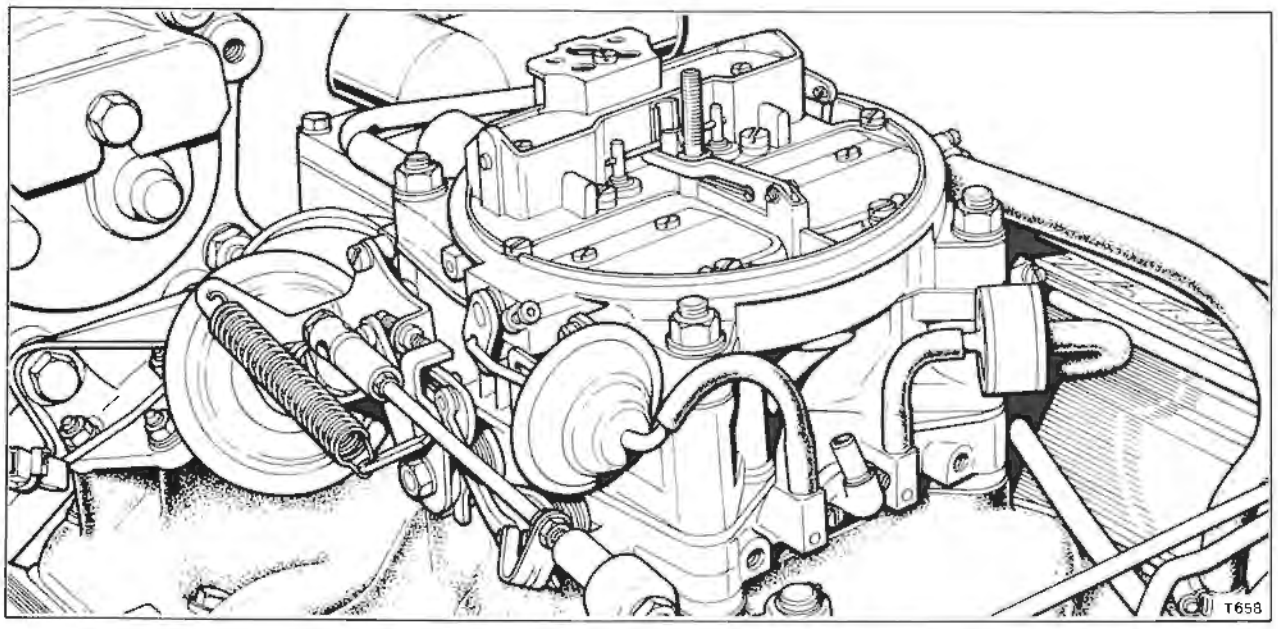

Fig. K59 Carburetter in position

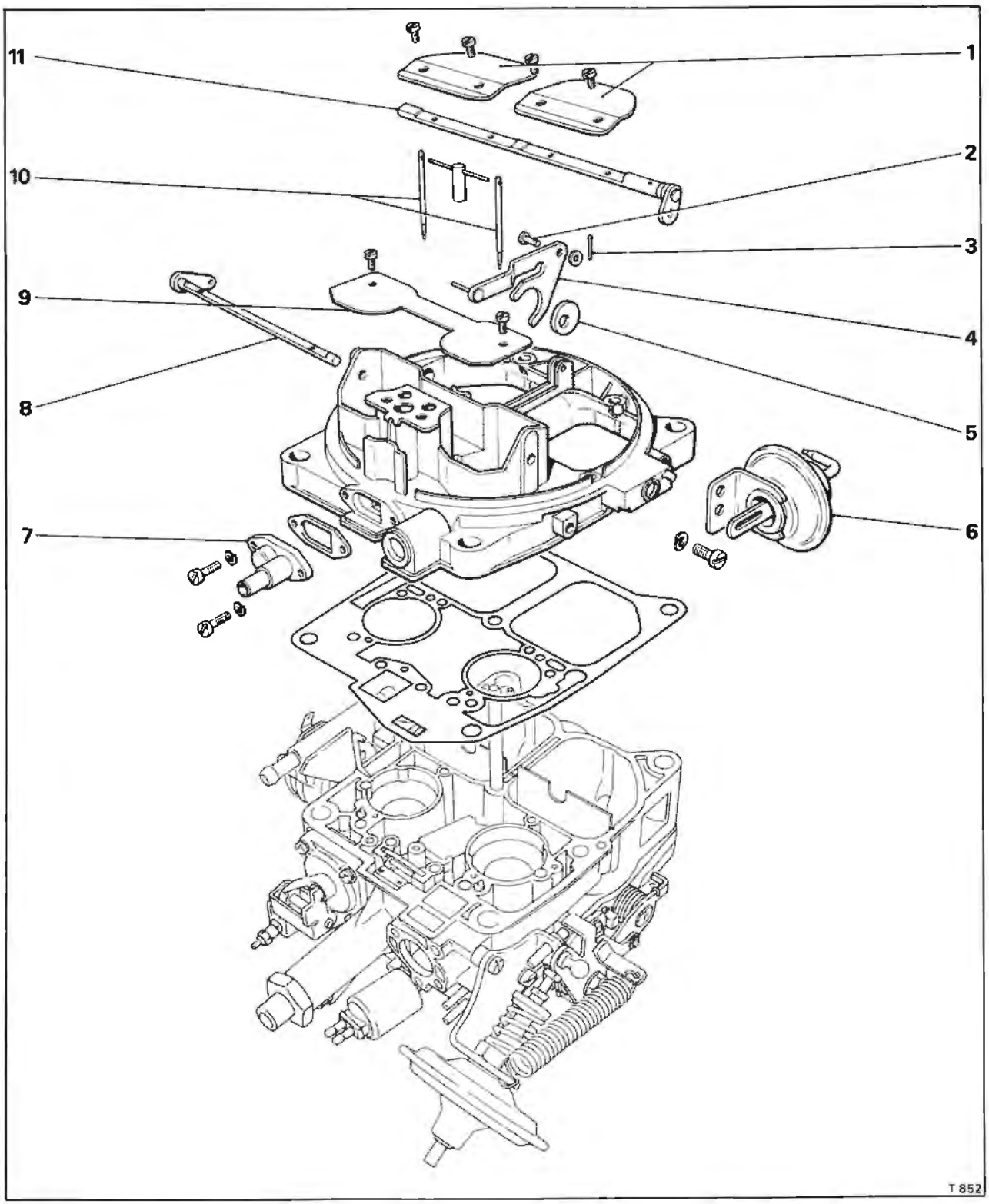

Fig. K60 Dismantling the carburetter (carburetter cover)

1 Secondary stage air flaps
2 Clevis pin
3 Split pin
4 Secondary stage needles operating lever
5 Nylon cam
6 Secondary stage air flaps damper unit
7 Float chamber vent connection (if fitted)
8 Choke strangler spindle
9 Choke strangler valve
10 Secondary stage needles
11 Secondary stage air flaps operating spindle

Printed in England

© Rolls-Royce Motors Limited 1978

Carburetter cover (see Fig. K60)

1. Thoroughly clean the outside of the carburetter using paraffin.
2. Detach the vacuum signal hose from the secondary stage air flaps damper unit.
3. Withdraw the retaining clip that secures the choke strangler lever to the operating rod. Carefully prise the rod from the lever.
4. Unscrew the eight screws that retain the carburetter cover to the carburetter housing.
5. Separate the cover from the housing by levering with a screwdriver in the slot provided at the rear of the carburetter.
6. Remove the split pin from the clevis pin situated above the secondary stage air flaps. Collect the small washer and withdraw the clevis pin.
7. Lift up and withdraw the secondary stage needle operating lever assembly. Slide the two needles from the traverse. Slide the traverse from the lever.
8. Unscrew and remove the four screws retaining the secondary stage air flaps to the spindle.

Note
The underside of each screw is 'spread' to prevent turning.

9. Carefully overtravel the spindle to release the small nylon bush (if fitted) from the damper tensioning spring assembly.
10. Slide the nylon bush (if fitted) from the pin.
11. Remove the screw securing the secondary stage air flap damper unit to the carburetter cover and withdraw the unit, carefully disengaging its slotted operating rod from the air flaps spindle linkage.
12. Align the spindle tensioning pin with the cut-out in the carburetter cover and pull the spindle out.

Note
Collect the nylon cam located between the secondary chambers as the spindle is withdrawn, noting which way round it is fitted on the spindle, to facilitate assembly.

13. Unscrew and remove the main fuel jets of the primary stage and the blanks that mask the idle fuel jets, they are located in the fuel jet housings of the primary stage.
14. Unscrew and remove the primary stage air jets.
15. Unscrew the screws retaining the choke strangler to its spindle, above the primary stage of the carburetter.
16. Withdraw the spindle.
17. From above the carburetter cover, tap out the primary stage discharge branch tubes in a downwards direction, using a soft wooden drift; collect the spring clip.
18. Remove the two screws and spring washers securing the float chamber vent connecting plate (if fitted) or the blanking plate. Withdraw the plate and gasket.

Carburetter housing (see Fig. K61)

19. Remove the gasket from the top of the carburetter housing.
20. From the float chamber, carefully lift out the pivot spring, float assembly (withdraw the pivot pin) and needle valve, noting the position of the retaining clip.
21. Detach the vacuum signal hose for the automatic choke pulldown unit.
22. Drain off any fuel remaining in the float chamber.
23. Detach the throttle linkage return spring.
24. Unscrew the four screws retaining the acceleration pump in position and collect the spring washer from each screw. Withdraw the acceleration pump assembly from the carburetter housing, taking care not to lose the spring fitted between the diaphragm and plastic insert, the small end of the spring is fitted towards the diaphragm.
25. Detach the diaphragm and operating plunger assembly from the cover.
26. Carefully remove the plastic insert from the carburetter housing, ensuring that the insert is not damaged.
27. Unscrew the acceleration pump adjusting clamp nut, free the linkage and collect the small nylon adapter, spring and spring seating washer.
28. Unscrew the two screws retaining the carburetter housing to the throttle body. The screws are situated on either side of the carburetter between the primary and secondary throttle butterflies, they are also fitted into counterbores and have spring washers.
29. Detach the carburetter housing from the throttle body.
30. From the bottom of the carburetter housing gently tap out the deflector plate from the secondary stage mixing chambers.
31. Unscrew and remove the screw securing the throttle damper/jack in position; collect the spring washer from each screw. The upper screw is longer than the others and has a distance piece fitted between the throttle damper/jack mounting bracket and the carburetter housing.
32. Unscrew the setscrew from the end of the throttle damper/jack operating rod. Unscrew the large spring retaining nut situated underneath. Collect the spring.
33. Unscrew the nut securing the throttle damper/jack diaphragm assembly to the mounting bracket.
34. Unscrew the fuel inlet adapter, collect the sealing washer and withdraw the filter assembly from its housing.
35. Unscrew and remove the screw securing the automatic choke mechanism to the carburetter housing; collect the spring washer, plain washer and part number identification tag from under the head of the screw.
36. Before withdrawing the choke mechanism note the position of the operating tag on the counter-

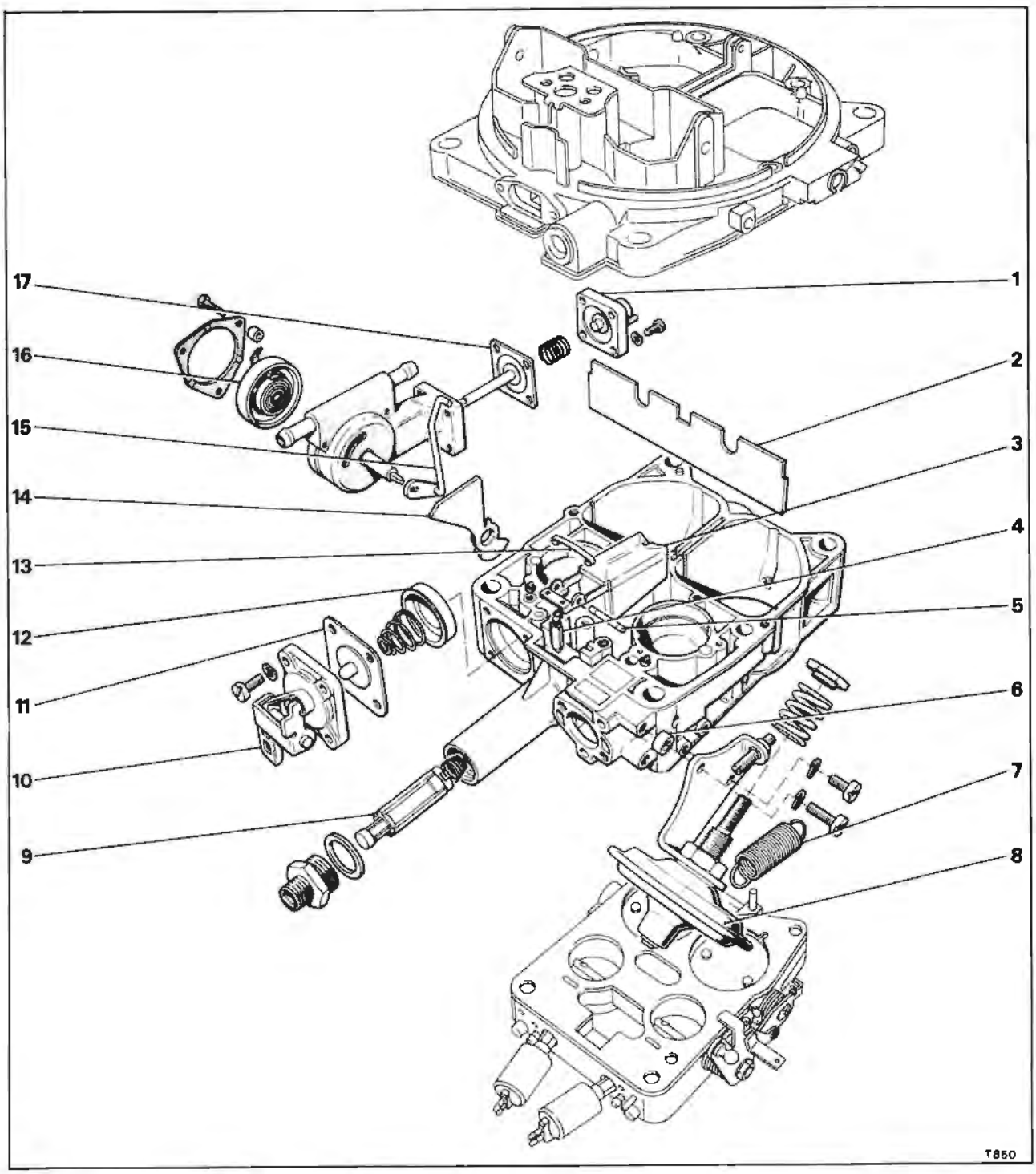

Fig. K61 Dismantling the carburetter (carburetter housing)

1 Choke pulldown cover (including adjusting screw and vacuum connection)
2 Deflector
3 Float assembly
4 Float needle valve
5 Float pivot pin
6 Distance piece
7 Throttle linkage return spring
8 Throttle damper/jack
9 Fuel filter
10 Acceleration pump cover and lever assembly
11 Acceleration pump diaphragm
12 Acceleration pump plastic insert
13 Float pivot spring
14 Counterbalance/fast-idle cam lever
15 Choke strangler operating rod and lever
16 Automatic choke bi-metal assembly
17 Choke pulldown diaphragm

Printed in England
© Rolls-Royce Motors Limited 1978
December 1978
TSD 4200

balance/fast-idle cam lever in relationship to the bi-metal tag protruding from the rear of the bi-metal housing.
37. Withdraw the counterbalance/fast-idle cam lever.
38. Withdraw the secondary stage lock-out lever.
39. Withdraw the choke strangler operating rod and lever as the automatic choke mechanism is removed.
40. Note the position of the scribed alignment marks on the bi-metal coil and housing to facilitate correct assembly.
41. Unscrew the three setscrews retaining the automatic choke bi-metal in its housing. Withdraw the retaining ring, noting that the lowest setscrew is the longest of the three. In addition, each set-screw has a plastic distance piece fitted between the retaining ring and the bi-metal housing.
42. Withdraw the bi-metal cap.
43. Unscrew and remove the four screws retaining the pulldown cover in position. Carefully withdraw the cover and collect the spring located between the cover and diaphragm.
44. Withdraw the diaphragm and operating rod assembly.

Throttle body (see Fig. K62)
45. Remove the gasket from the upper face of the throttle body.
46. Unscrew and remove the two anti 'run-on' solenoids.
47. Unscrew and remove the two idle speed mixture regulating screws.
48. Detach any of the five vacuum signal hoses if they are still connected to the throttle body.
49. Unscrew and remove the two screws securing the speed control unit vacuum signal hose elbow to the throttle body, withdraw the elbow and collect the gasket.
50. Detach the small 'cee' clip from the connecting link between the primary and secondary stages of the throttle linkage.
51. Unscrew the nut securing the primary throttle linkage to the primary butterfly spindle. Collect the washer and withdraw the linkage; collect the small washer from the secondary throttle lever.
52. Lightly mark the primary throttle butterflies, to ensure that they are assembled in their original positions noting that the small hole in each butterfly valve is fitted towards the anti 'run-on' solenoid valves end of the body.
53. Unscrew the butterfly valve retaining screws and carefully remove the butterfly valves.
54. Tap the spindle out of the housing and collect the cover from the linkage end of the spindle.
55. Lightly mark the secondary stage butterfly valves to facilitate assembly in their original positions.
56. Unscrew the screws securing the butterfly valves, remove the valves.
57. Tap the automatic choke lock-pin from the end of the secondary spindle. Remove any burrs from the spindle screw holes before tapping the spindle out of the housing. The slight return spring tension will be released. Remove the spring and ferrule.
58. Dismantle the primary stage throttle lever assembly noting the relative positions of the parts.

The primary and secondary stage throttle linkage is shown in Figure K62.

Carburetter - To clean
All **light alloy** parts should be well soaked in methylated spirits and then cleaned. This does not apply to parts such as diaphragms, rubber hoses, gaskets, plastic parts, etc.

Carburetter - To inspect
1. Examine the throttle spindles and bearings in the carburetter body; check for excessive play and fit new parts if necessary.
2. Examine the various springs for breakage and renew any that are defective.
3. Examine the carburetter cover, housing and throttle body for signs of cracks.
4. Check the condition of all diaphragms and ensure that they are in good working order.
5. Inspect the condition of the fuel filter.

Carburetter - To assemble
Assemble the carburetter by reversing the procedure given for removal noting the following points.
1. Ensure that new gaskets are fitted.
2. Ensure that new rubber vacuum signal hoses are fitted for the distributor vacuum advance capsule, throttle damper/jack, choke pulldown unit, speed control unit and secondary stage air flaps damper.
3. The primary and secondary stage throttle butterfly discs must be fitted into their original positions and correctly aligned with the marks etched onto them prior to dismantling.
4. After assembly, carry out the settings and adjustments given in the 'Service adjustments' section.

Service adjustments
The Solex 4A1 carburetter is adjusted during manufacture to the correct settings in order to comply with various exhaust gas emission regulations and therefore, alterations to any of the settings should not be necessary.

If however, special circumstances do arise (e.g. settings are inadvertertly disturbed) where adjustment becomes necessary the following procedures must be adhered to.

The following screws must not be adjusted under any circumstances.
1. Secondary stage air balance control screws (see Fig. K63) in the throttle body.

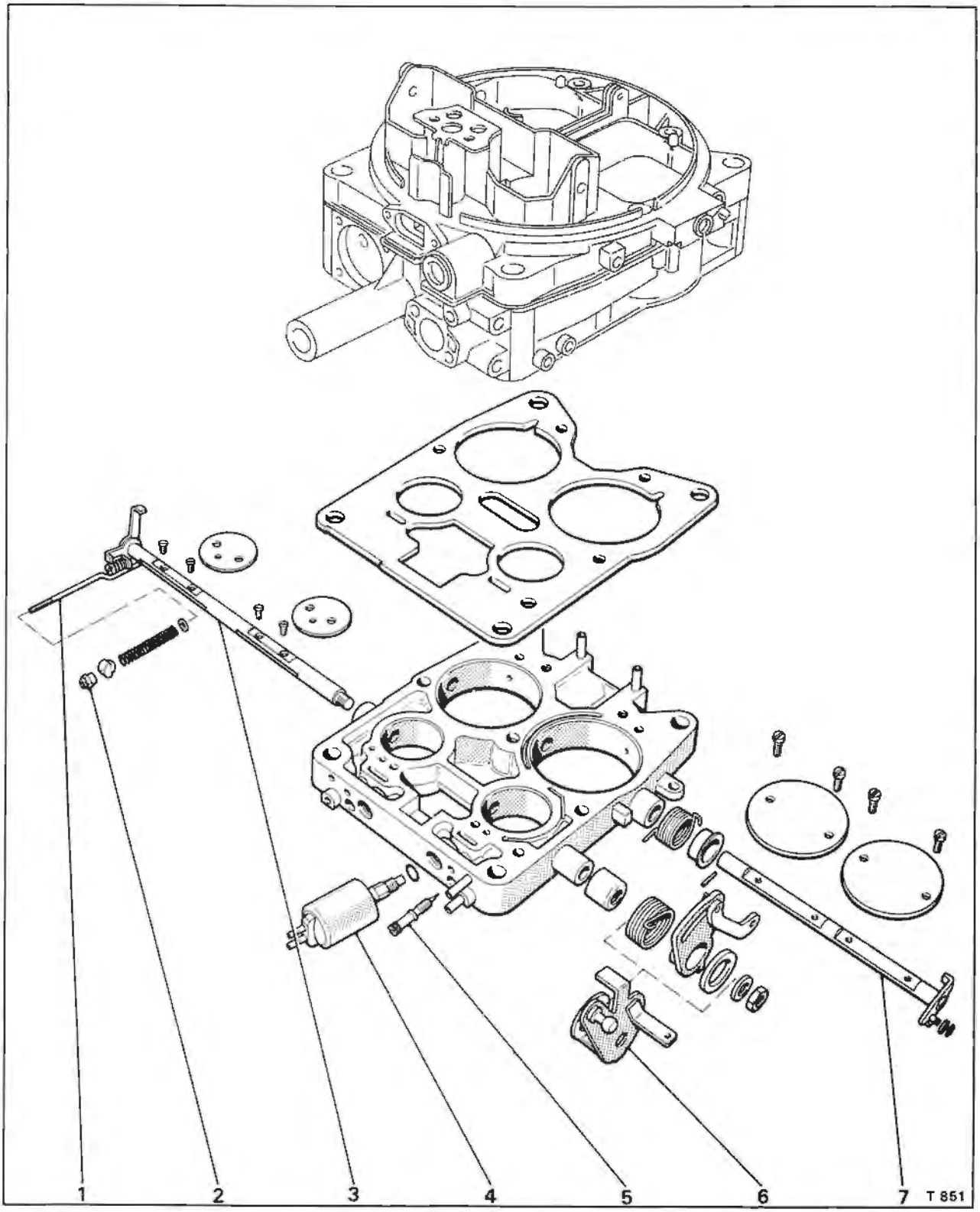

Fig. K62 Dismantling the carburetter (throttle body)

1 Acceleration pump operating rod
2 Acceleration pump adjustment nut
3 Primary stage throttle butterfly spindle
4 Anti 'run-on' solenoid valve
5 Idle speed mixture regulating screw
6 Carburetter throttle linkage
7 Secondary stage throttle butterfly spindle

Printed in England
© Rolls-Royce Motors Limited 1979
November 1979
TSD 4200

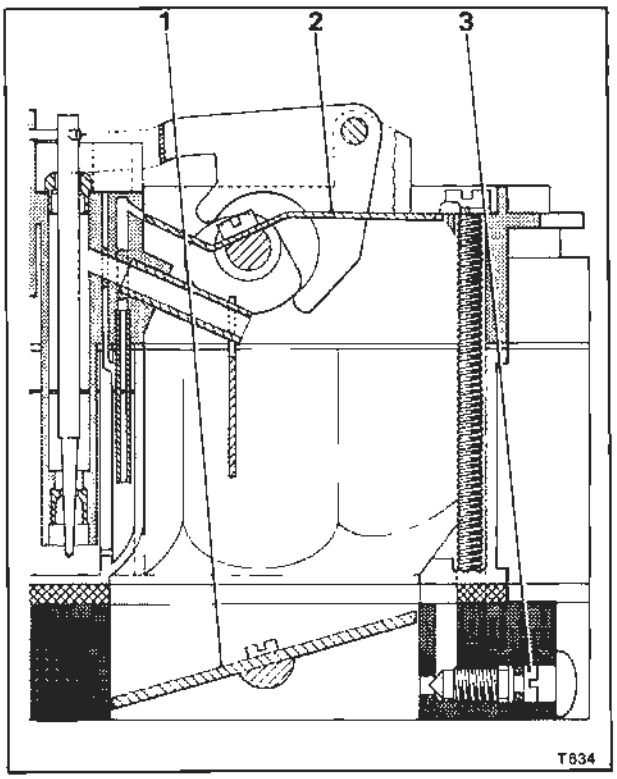

Fig. K63 Sealed adjusting screws
1 Air balance control screws

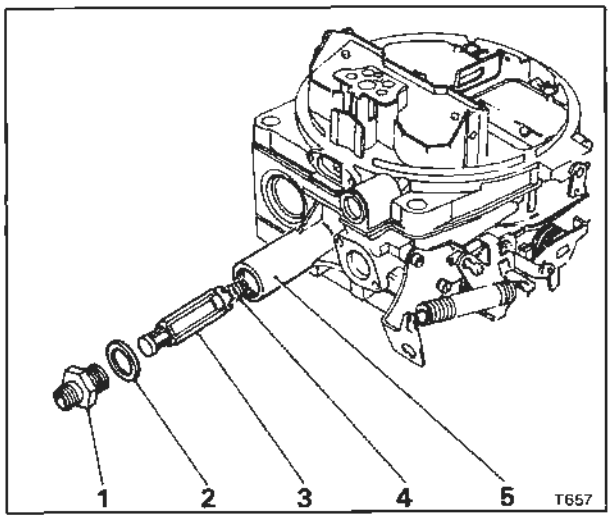

Fig. K64 Carburetter fuel filter
1 Inlet adapter
2 Sealing washer
3 Fuel filter
4 Spring
5 Filter housing

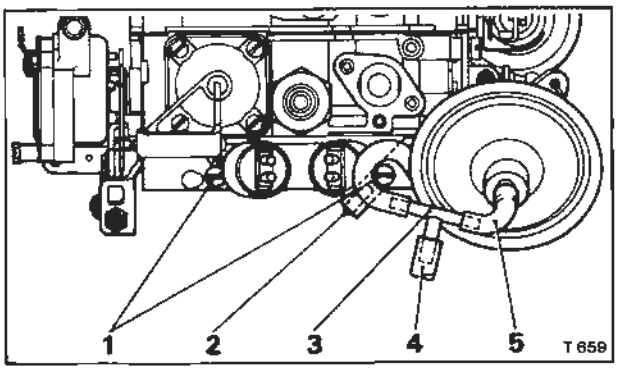

Fig. K65 Carburetter modification for low grade fuel
1 Idle mixture regulating screws
2 Taper pin
3 'Tee' piece
4 Hose to distributor vacuum advance capsule
5 Hose to throttle damper/jack

Carburetter fuel filter (see Fig. K64)
Fitted into the fuel inlet behind the threaded adapter is a plastic filter assembly. At the intervals specified in the service schedules the inlet filter should be cleaned in the following manner.

1. Unscrew the fuel delivery pipe union at the fuel inlet adapter.

2. Unscrew the fuel inlet adapter and collect the sealing washer.

3. Withdraw the plastic filter, taking care not to lose the small spring situated on the inner end.

4. Clean the filter by washing it in clean fuel, shake any excess fuel from the unit and dry with compressed air.

5. Ensure that the spring is correctly located on the end of the filter unit, the slightly larger diameter of the spring should be seated in the filter.

6. Fit the filter to the carburetter by reversing the procedure given for removal, noting that a new sealing washer should be fitted between the inlet adapter and carburetter.

Carburetter adjustment
Before commencing any adjustments to the carburetter ensure that

1. There are no air leaks into the induction system.

2. The engine is at normal operating temperature and the automatic air conditioning system is switched off.

3. The ambient air temperature is between 16° C. (60° F.) and 27° C. (80° F.).

4. The ignition timing is correct and the ignition system is in good working order (refer to Chapter M - Electrical system).

If the ignition timing is to be set using low grade fuel (refer to Chapter M, Section M3), the distributor

	(†)	(††) (†††)
Slow idle speed	600 r.p.m.	650 r.p.m.
Ignition timing	Refer to Chapter M, Section M3	
Throttle damper/ jack setting	(a) 1 300 r.p.m. - 1 400 r.p.m. vacuum signal pipe disconnected (b) 0,127 mm.-0,254 mm. (0.005 in. - 0.010 in.) clearance between the plunger and throttle lever with the vacuum signal pipe connected and the engine running at slow idle.	
Fast-idle speed	1 750 r.p.m. - 1 850 r.p.m.	1 750 r.p.m. - 1 850 r.p.m.
	Set with engine at normal working temperature and the distributor vacuum advance signal disconnected and blanked off.	
Slow idle CO setting 97 to 94 R.O.N. (Min.) fuel 91 R.O.N. (Min.) fuel	0.8% – 1.2% @ 600 r.p.m. 2.5% – 3.0% @ 600 r.p.m.	0.2% – 0.5% @ 650 r.p.m. 2.5% – 3.0% @ 650 r.p.m.
	In Neutral, with the automatic air conditioning system switched off and the air cleaner/silencer fitted.	
Choke pulldown setting	3,0 mm. - 3,4 mm. (0.118 in. - 0.134 in.)	3,8 mm. - 4,2 mm. (0.150 in. - 0.165 in.)
Modification	If either the ignition timing or the slow idle CO is to be set using low grade fuel [i.e. 91 R.O.N. (Min.)] a modification is necessary to the distributor vacuum advance signal. Details of this change are given in Carburetter adjustment - item 4 (Page K5-18).	
Identification (see Fig. K67)	(†) These cars have a float chamber vent connection on the carburetter cover and short air intakes. (††) These cars have extended air intakes and float chamber vent connection on the carburetter cover blanked. The automatic choke pulldown has a delay valve fitted into the vacuum signal hose. (†††) These cars are similar to cars identified with (††), however, an engine modification package alters the ignition setting. These engines have the suffix letter B stamped on the crankcase immediately after the engine number.	

Fig. K66 Basic tuning settings

vacuum advance signal and throttle damper/jack hoses require the following modification (see Fig. K65).

Cut the throttle damper/jack vacuum signal hose in half and insert a small 'tee' piece. Cut the distributor vacuum advance signal hose into two pieces at a point 3,17 cm. (1.250 in.) from the carburetter. Connect the hose from the distributor vacuum advance capsule to the remaining connection of the 'tee' piece and seal the short rubber hose from the carburetter with either a taper pin or by other suitable means.

Idle mixture setting

Later models of the Solex 4A1 carburetter may have tamperproof plugs fitted over the idle mixture adjustment screws and a tamperproof cap over the idle speed adjustment screw. Non-tamperproofed carburetters may be adjusted as follows.

1. Connect an impulse tachometer to the engine in accordance with the manufacturer's instructions.
2. Ensure that the automatic air conditioning system is switched off.
3. Start and run the engine. Check to ensure that the conditions given in 'Carburetter adjustment' prevail.
4. Stop the engine.
5. Remove the air cleaner/silencer assembly and the rubber sealing ring (see Section K6).
6. A basic setting can be obtained by completely screwing in (turning clockwise) both idle mixture regulating screws and then, unscrewing each screw four complete turns.
7. Fit the probe of a suitable exhaust gas analyser (e.g. Horiba Mexa 200) into the exhaust tailpipe in accordance with the manufacturer's instructions.
8. Start the engine and ensure that the slow idle speed is correctly set (see Fig. K66).
9. Allow the engine to run at the slow idle speed for at least 5 minutes after normal operating temperature has been reached.

Printed in England
© Rolls-Royce Motors Limited 1981
December 1981
TSD 4200

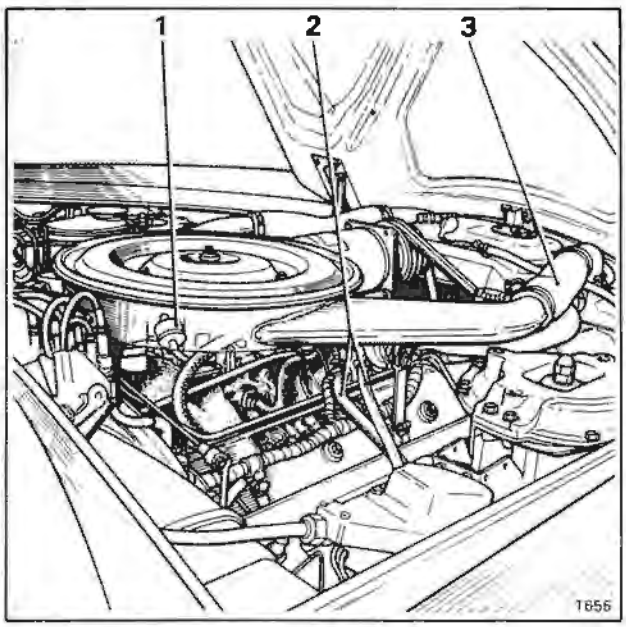

Fig. K67 Identification of cars
1 Choke delay valve
2 Fuel lines
3 Extended air intakes

10. Check that the exhaust gas analyser carbon monoxide content (CO) reading is steady and note the reading, this should be as stated in Figure K66.
11. If the CO reading is not correct, adjustments can be carried out by turning the idle mixture regulating screws by equal amounts either clockwise to reduce the CO reading or anti-clockwise to increase the reading. Allow conditions to stabilise and ensure that the idle speed is correct before the CO reading is again taken.
12. Stop the engine.
13. Fit the air cleaner/silencer assembly and the rubber sealing washer (see Section K6).
14. Start the engine and ensure normal operating temperature is attained.
15. Finally, again check that the CO reading at the slow idle speed is as quoted in Figure K66. In countries where only low octane fuel is available changes to the ignition timing and a higher idle CO reading are allowed, as shown in Figure K66.
16. Stop the engine and remove the test equipment.

Fast - idle setting
1. Ensure that the engine is not running but has attained normal operating temperature.
2. Open the throttles and raise the fast-idle cam counterbalance lever to the vertical position (see Fig. K68), release the throttle linkage whilst holding the lever vertical. The throttle linkage will now be engaged on the highest step of the fast-idle cam and the throttles will be in the cold start position.
3. Connect an impulse tachometer to the engine in accordance with the manufacturer's instructions.

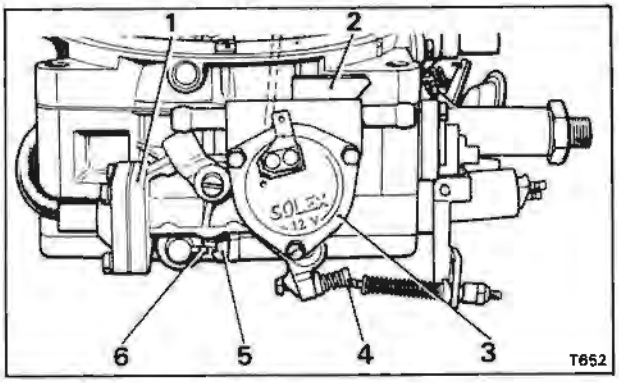

Fig. K68 Choke fast-idle
1 Choke pulldown
2 Cam counterbalance lever
3 Bi-metal cap
4 Fast-idle speed adjustment screw
5 Secondary stage lock-out lever
6 Secondary stage lock-out pin

4. Disconnect the vacuum signal hose from the distributor advance capsule; suitably blank the signal hose.
5. Start the engine and check the fast-idle speed is as specified in Figure K66.
6. Alterations to the speed can be made by adjusting the fast-idle screw (see Fig. K68).
7. When the fast-idle speed is correct, open the throttles to release the cam and return the engine to the slow idle speed.
8. Stop the engine.
9. Remove the blank from the distributor vacuum advance signal hose and fit the hose to the distributor capsule.
10. Remove the impulse tachometer.

Throttle jack/damper setting
1. Remove the air cleaner/silencer (see Section K6).
2. Start and run the engine until normal operating temperature is attained.
3. Ensure that the fast-idle cam is not in operation and that the engine slow idle speed is correct (see Fig. K66).
4. Disconnect the vacuum signal hose from the throttle jack/damper (see Fig. K69) and suitebly blank the hose; the engine speed will increase.
5. Slacken the lock-nut (see Fig. K69, item 3) on the throttle jack/damper and adjust the bolt (item 4) to obtain the engine speed quoted in Figure K66.
6. Tighten the lock-nut and check to ensure that the engine speed is still correct.
7. Remove the blank from the vacuum signal hose and fit the hose to the throttle jack/damper.
8. Adjust the gap between the throttle lever (item 6) and bolt (item 4) to the setting quoted in Figure K66 by turning the nut (item 2).
Turning the nut anti-clockwise increases the gap.
9. Stop the engine.

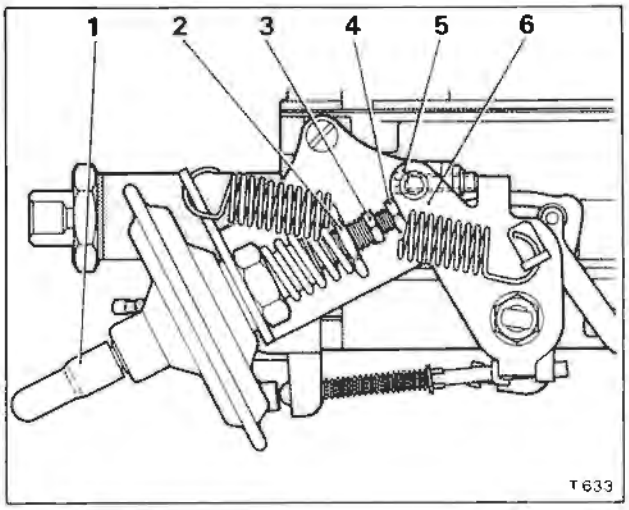

Fig. K69 Throttle jack/damper
1 Vacuum signal hose
2 Adjustment nut
3 Lock-nut
4 Adjustment bolt
5 Throttle stop screw
6 Throttle lever

10. Fit the air cleaner/silencer and rubber sealing ring.

Float chamber fuel level
Preliminary setting
If new parts have been fitted to the float assembly a **preliminary fuel level setting** can be achieved as follows.
1. Install the float assembly in the float chamber.
2. Using light pressure on the extreme end of the float toggle press the needle valve onto its seat.
3. Ensure that the top face of the float is between 3,0 mm. and 4,0 mm. (0.118 in. and 0.157 in.) below the joint face of the float chamber when measured at point A in Figure K70.
4. This setting can be adjusted by carefully bending the float lever at the point shown in Figure K71.
5. After completion of the preliminary setting the fuel level should always be tested as described in Operations 6 to 9 inclusive.

Testing the fuel level
The level of fuel in the float chamber should be as shown in Figure K71. The measurement should be taken with the float chamber cover removed and the float toggle spindle prevented from becoming buoyant.
6. Ensure that the carburetter is horizontal and fill the float chamber with fuel through the normal fuel inlet connection.
7. Connect the test equipment shown in Figure K72 to the fuel inlet. Apply pressure with the hand operated pump until the column of water in the test

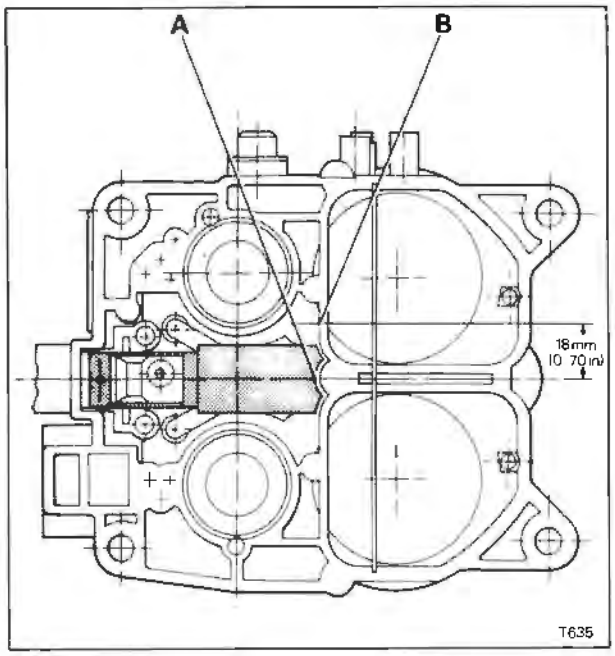

Fig. K70 Checking the float position
A Preliminary float checking point
B Fuel level checking point

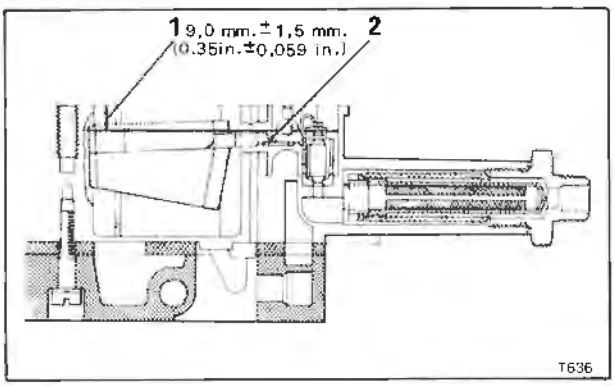

Fig. K71 Checking the float chamber fuel level
1 Fuel level measurement
2 Bending point for float adjustment

equipment reaches 2,0 m. (6ft. 6¾ in.) which is equivalent to a pressure of 0,20 kgf/sq.cm. (2.86 lbf/sq.in.).
8. Check that the fuel level is 9,0 mm. ± 1,5 mm. (0.35 in. ± 0.059 in.) below the joint face (see Fig. K71) when measured at a distance of 18 mm. (0.70 in.) from the centre line of the float (see Fig. K70).
9. To correct the fuel level it is permissible to carefully bend the float lever at the point shown in Figure K71.

Printed in England
© Rolls-Royce Motors Limited 1978
December 1978
TSD 4200

Automatic choke pulldown

1. The choke pulldown gap must be set with the carburetter at room temperature and the choke strangler fully closed.

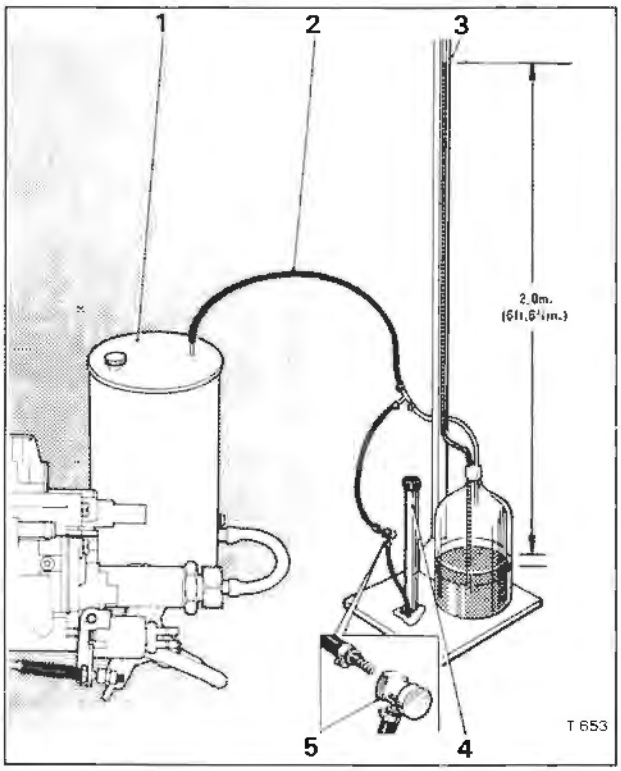

Fig. K72 Test equipment

1 Fuel supply reservoir
2 Connection pipe (air pressure)
3 Test equipment
4 Pump
5 One-way pressure valve

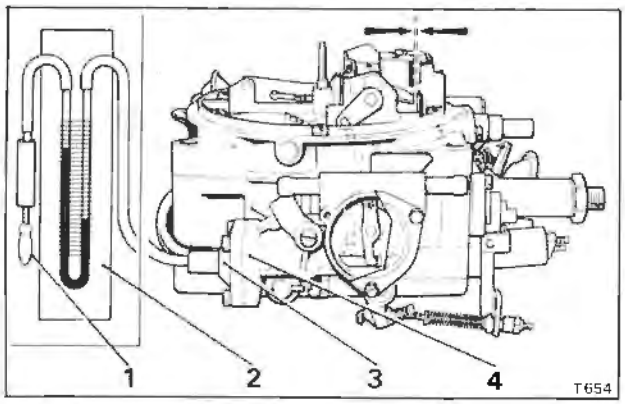

Fig. K73 Automatic choke pulldown setting

1 Vacuum pump
2 Manometer
3 Adjustment screw
4 Pulldown unit

2. Operate the pulldown unit by applying a vacuum of between 38 cm. Hg. and 50 cm. Hg. (15 in. Hg. and 20 in. Hg.) to the tapping adjacent to the adjustment screw.
3. Turn the adjustment screw to set the gap between the leading edge of the choke strangler and the carburetter cover (see Fig. K73). Bias the strangler lightly in the opening direction as the measurement is made.Turning the adjustment clockwise decreases the gap. The correct setting is given in Figure K66.

Acceleration pump

When the throttles are opened from the slow idle position fuel should be immediately discharged from the acceleration pump jets. To check the quantity of the acceleration pump discharge, proceed as follows.

1. Remove the carburetter from the engine (see Carburetter - To remove).
2. Position the carburetter horizontally over two suitable measuring containers (see Fig. K74).
3. Ensure that an adequate supply of fuel is connected to the fuel inlet union of the carburetter. Connect the test equipment illustrated in Figure K72 to the fuel supply and apply pressure using the hand pump until the water column reading is 2,0 m. (6ft. 6¾in.) which is equivalent to a pressure of 0,20 kgf/sq.cm. (2.86 lbf/sq. in.).

This is to ensure that the float chamber is always full throughout the test.

4. Open and close the throttle butterflies of the primary stage in a uniform manner, starting from the slow idle position (i.e. throttle linkage resting on

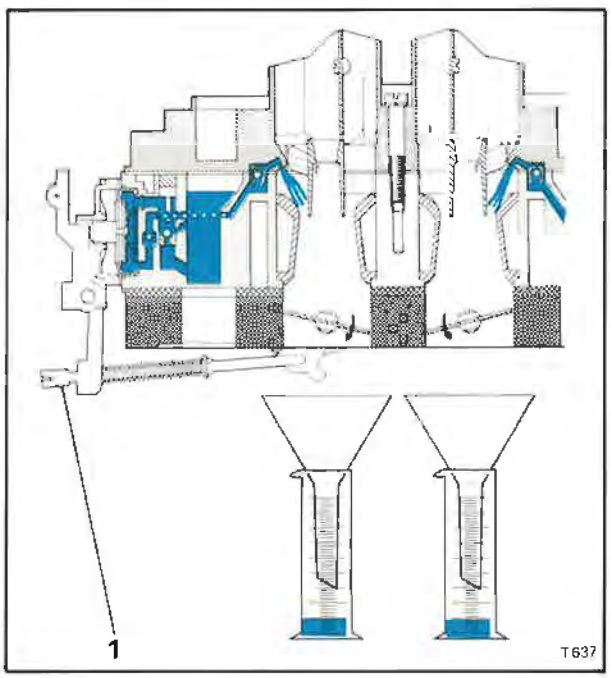

Fig. K74 Acceleration pump setting

1 Adjustment clamp screw

the slow idle stop and not being 'jacked' open by the throttle jack/damper unit).
5. Determine the amount of fuel injected, this should be 1,0 cc ± 0,1 cc for each stroke from each side. To reach a more precise reading carry out 10 pumping strokes in approximately 25 to 35 seconds and collect the fuel seperately from each side of the carburetter, a more accurate reading for each stroke can then be calculated.
6. The amount of fuel injected can be regulated by adjusting the clamping screw (see Fig. K74).

Automatic choke bi-metal
If the choke bi-metal cover has been removed or replaced the corelation mark on the cap and housing should always be aligned when the cover is again fitted. However, if this is not possible for any reason the tension of the bi-metal coil can be set as follows.
1. Remove the air cleaner/silencer assembly (see Section K6).
2. Ensure that the temperature of the bi-metal element is between 20° C. and 25° C. (68° F. and 77° F.).
3. Ensure that the bi-metal cap is loosely assembled into the housing and can be rotated.
4. Ensure that all tension is removed from the bi-metal coil by turning the bi-metal cap clockwise; the choke strangler will lose its return tension at this time.
5. Slightly open the choke strangler.
6. Slowly rotate the bi-metal cap anti-clockwise until the choke strangler is fully closed.
7. Scribe a line on the bi-metal cap to coincide with the mark on the bi-metal housing.
8. Tighten the three retaining setscrews.

Secondary stage air flaps return spring
Details of this return spring are given on Page K5 - 10, however, it can be replaced and/or adjusted as follows.
1. Unscrew the spring spindle locking screw (see Fig. K57, item 6).
2. Remove the spindle and withdraw the spring.
3. Fit a new spring by reversing the procedure but do not tighten the locking screw until the spring tension has been set by carrying out Operations 4 to 6 inclusive.
4. Ensure that the locking screw has been unscrewed and the air flaps are open.
5. Turn the spring spindle slowly anti-clockwise until the air flaps just close. Continue to turn the spring spindle a further five-eighths of a turn.
6. Tighten the locking screw using a 2.5 mm. (0.098 in.) allen key.

Secondary stage throttle return spring
If a malfunction occurs resulting in poor idle quality which is diagnosed as a faulty secondary stage throttle return spring (see Section K8, Fault diagnosis), the return spring can be replaced without dismantling the carburetter assembly. Remove and fit the return spring by unwinding it over the throttle lever.

After fitting the new spring, open the secondary stage throttle butterflies. Release the throttle lever and ensure that the throttle butterflies return to their fully closed position assisted by the pressure of the new spring.

S.U. HIF7

For details of the S.U. HIF7 carburetters fitted to cars with emission control systems (i.e. cars destined for Australia, Canada, Japan and the U.S.A.) refer to the appropriate 'model year' section within Chapter U - Emission control systems.

Description
Two S.U. HIF7 (Horizontal Integral Float Chamber) carburetters with 4,76 cm. (1.875 in.) choke bores (see Fig. K75) are fitted to the engine on a central 'tee' piece which is mounted over an eight branch induction manifold.

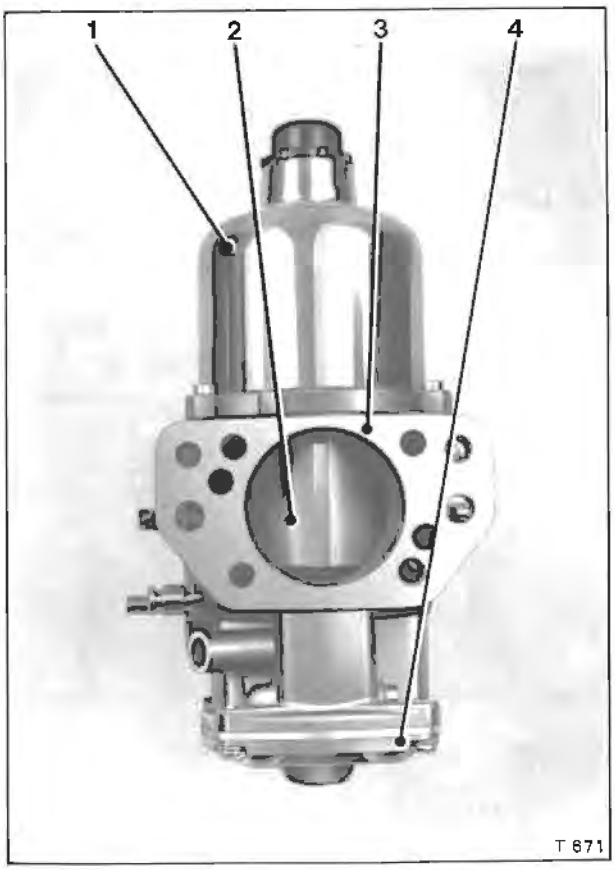

Fig. K75 S.U. HIF7 carburetter
1 Suction chamber
2 Piston
3 Carburetter body
4 Bottom cover-plate

Printed in England
© Rolls-Royce Motors Limited 1978
December 1978
TSD 4200

This type of carburetter automatically adjusts both its choke and jet area to meet the demand of the engine which is dependent on engine speed and loading. As air is drawn through the carburetter, the piston acting as an obstruction will cause a depression to be formed in the area between the throttle and the piston. This depression is communicated by means of transfer holes in the base of the piston to the area above the piston, causing an upward force to be imposed on the piston. The piston will rise in response to this force,relieving the depression in the area between the piston and the throttle as it does so,until a point is reached where the force acting on the piston is balanced by the weight of the piston and the load exerted by the piston spring.

A spring-loaded jet needle is fitted to the carburetters, which is biased downstream and operates in a 2,54 mm. (0.10 in.) diameter main jet; this jet does not require centralising.

Float chamber (see Fig. K76)
The float chamber is incorporated in the main body casting; access to the chamber is obtained by removing the bottom cover-plate (item 7). The moulded float (item 10) is shaped so that it surrounds the jet tube and is pivoted along a line parallel to the inlet flange. The float is retained by a spindle (items 2 and 9) which screws into the body casting.

Entry of the fuel into the float chamber is via a brass tube (item 1) in the side of the carburetter body to a needle valve assembly (item 3).

The jet is pressed into the top of an aluminium tube which is in turn pressed into a plastic moulding (item 8). This hollow moulding known as the jet head is open at its lower end allowing fuel to enter the jet tube.

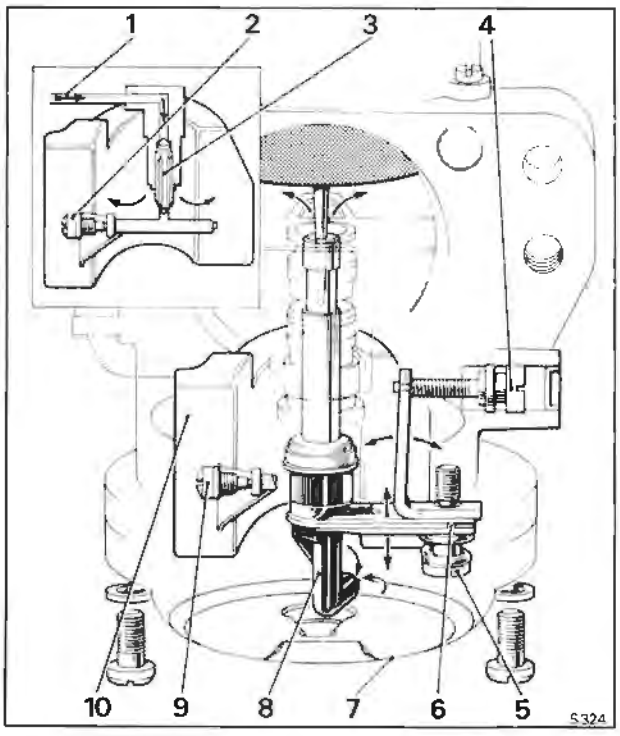

Fig. K76 Float chamber layout
1 Fuel inlet
2 Float fulcrum screw
3 Needle valve
4 Jet adjusting screw
5 Bi-metal pivot screw
6 Bi-metal assembly
7 Bottom cover-plate
8 Jet head
9 Float fulcrum screw
10 Concentric float

Mixture adjustment (see Fig. K76)
The jet tube of the HIF type carburetter is moved in the vertical plane to provide mixture adjustment.

The jet adjustment assembly is comprised of a right-angled adjusting lever of unequal length arms riveted to a bi-metal blade (item 6).

The blade is cut out to accept the jet head (item 8) and the shape of the jet head is formed so that any movement of the bi-metal blade is transmitted to the jet head, moving it in the vertical plane.

The right-angled adjusting lever and bi-metal blade (item 6) are attached to the body casting by a spring-loaded retaining screw (item 5) positioned in the short arm of the lever. This attachment allows the adjusting lever to be pivoted at the outer edge of its short arm and is loaded by the spring towards the jet adjusting screw (item 4).

The jet adjusting screw is located at the outer end of the long arm of the adjusting lever; screwing the adjusting screw inward will lower the jet, enriching the mixture and unscrewing the adjusting screw will allow the spring to return the lever together with the jet, weakening the mixture.

After the mixture has been set the jet adjustment can be sealed by fitting a plug into the jet adjusting screw recess of the carburetter body.

HIF7 carburetters are set and balanced by accurate flow measuring techniques during manufacture and therefore, adjustment of the mixture screws should not be necessary.

Fuel temperature compensation (Viscosity compensator) (see Fig. K76)
This device alters the jet position in relation to the metering needle to compensate for changes in fuel viscosity which take place with changes in fuel temperature.

When the fuel temperature rises, the viscosity is lowered and in an uncompensated assembly this would allow more fuel to flow for a given jet/needle relationship.

In the HIF jet assembly the jet head is attached to a bi-metal blade (item 6). This bi-metal is immersed in the fuel in the float chamber and will

move in the vertical plane in response to changes in fuel temperature. The jet will be raised to a weaker position on the jet needle when the fuel temperature rises and will be lowered to a richer position when the temperature falls.

From this it will be seen that once the jet position has been selected by adjusting the mixture screw, alterations of fuel temperature will bring about slight alterations in jet position to compensate for the change in fuel viscosity.

The effect of this device is that drivability is improved over wide ranges of temperature, and that exhaust emissions can be kept within closer limits during cold starting and the warm-up period. Temperature compensation also allows carburetters to have the mixture setting pre-set and sealed before the car is delivered.

Overrun valves (see Fig. K77)

During overrun (i.e. when decelerating with the throttles closed), insufficient mixture is supplied to the engine to maintain satisfactory combustion. The overrun valves alleviate this condition by allowing some mixture to pass through the throttle plates (butterflies) at high inlet manifold depressions.

An overrun valve is fitted into the throttle plate of each carburetter

An overrun valve consists of a small disc retained in each throttle plate by a spring loaded plunger. Under normal conditions the disc is seated against the throttle plate. When the throttle is suddenly closed, the increased inlet manifold depression lifts the disc from its seating and allows a metered quantity of air/fuel mixture to pass through the throttle plate.

The action of the overrun valves maintains satisfactory combustion on overrun, thus reducing hydrocarbon emissions.

After the sudden closure of the throttles and as soon as the manifold depression falls, the overrun valve disc returns to its seat on the throttle plate.

Spring-loaded jet needle (see Fig. K78)

The jet needle fitted to each carburetter is biased towards a predetermined position in the jet orifice by means of a spring-loaded fixing.

The shoulder of the needle abuts a protrusion formed on the needle guide. Under the pressure of a spring the needle is held permanently in one position relative to the air flow. As the needle is retained in a predetermined position no jet centring is required and a non-centreable jet bearing is fitted. To ensure correct fitting the needle guide carries an etched alignment mark which should be positioned mid-way between the two cut-outs in the piston.

Carburetter fuel filter

A filter element is fitted into the fuel filter housing attached to the side of each carburetter. At the intervals specified in the Service Schedules these two filter elements should be discarded and new ones fitted.

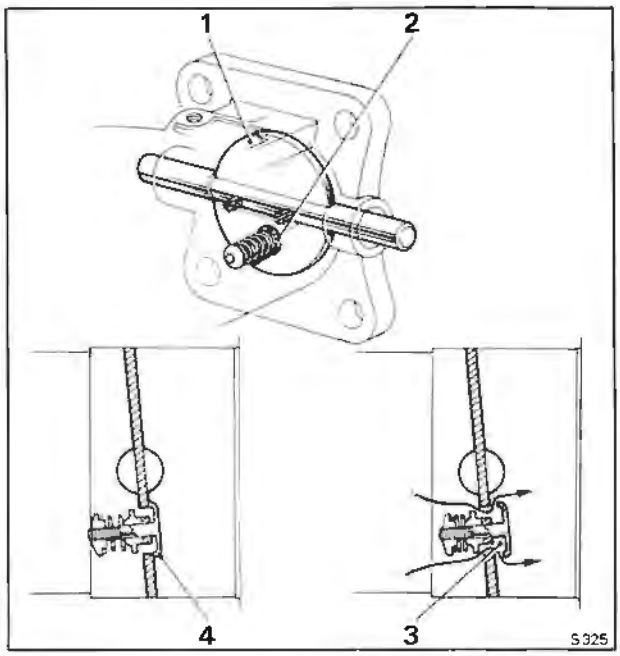

Fig. K77 Overrun valve
1 Throttle butterfly disc
2 Overrun valve
3 Overrun valve open
4 Overrun valve closed

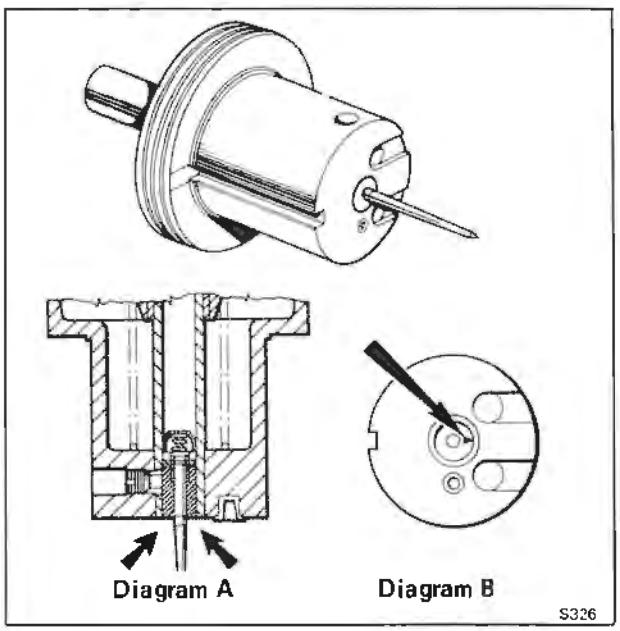

Fig. K78 Spring-loaded jet needle
Diagram A
Needle guide height setting
Diagram B
Needle guide alignment setting

Printed in England
© Rolls-Royce Motors Limited 1978
December 1978
TSD 4200

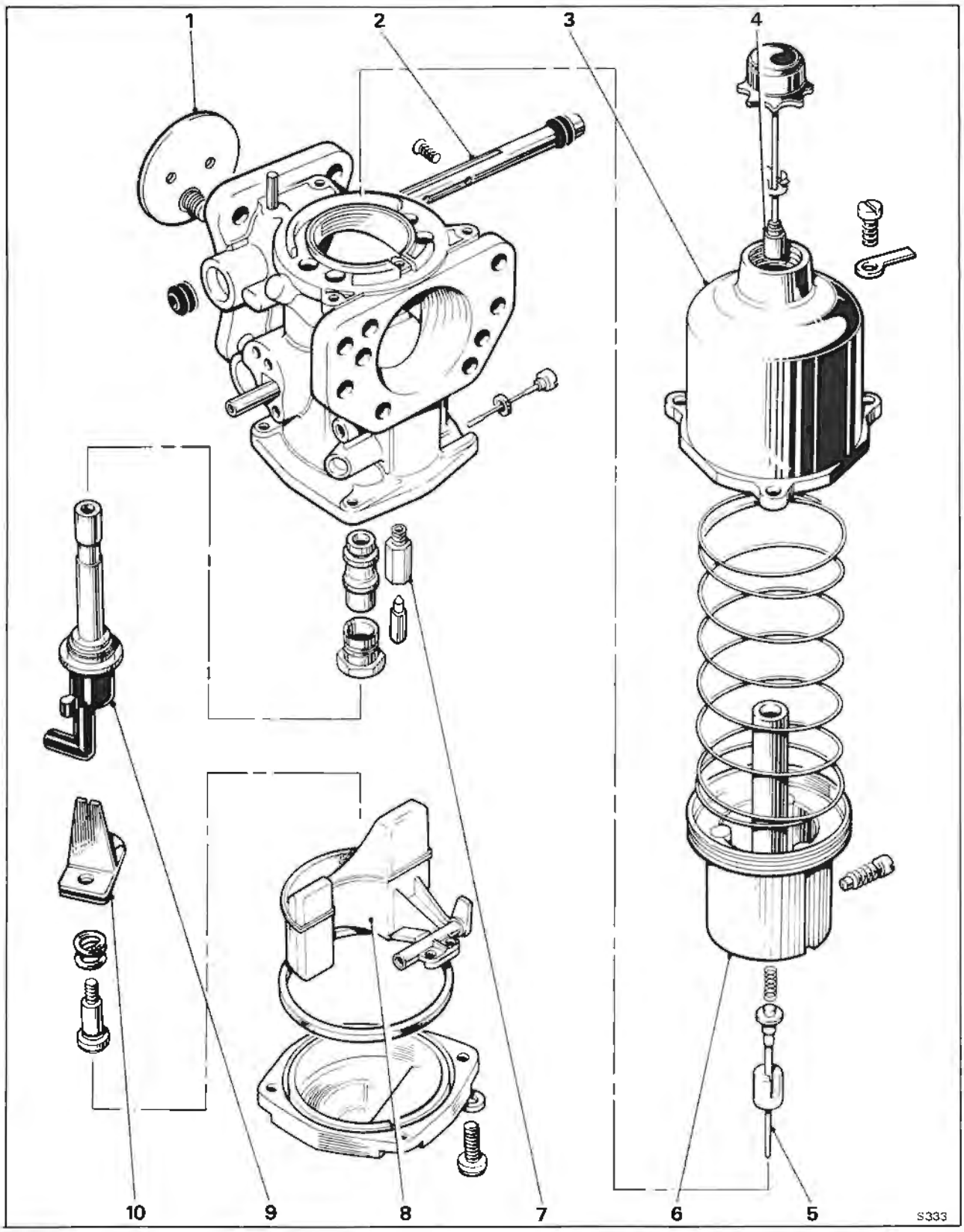

Fig. K79 SU HIF7 carburetter

1 Throttle disc with overrun valve
2 Throttle spindle
3 Suction chamber
4 Piston damper
5 Jet needle
6 Piston
7 Float needle valve assembly
8 Float
9 Jet assembly
10 Bi-metal jet lever

Carburetters and air horns assembly - To remove
Before commencing to remove the carburetters observe the following points.
1. When disconnecting the various hoses, pipes and wiring connections ensure that they are suitably labelled to assist identification when assembling.
2. Ensure that **all** open ends of pipes, hoses, etc. are suitably blanked off to prevent the ingress of dirt, etc.
3. Ensure that the usual safety precautions are carried out (i.e. parking brake firmly applied, gear range selector lever in 'Park', battery disconnected, etc.).

To remove the carburetter and air horn assembly proceed as follows
From 'A' bank side
1. Remove the air intake elbow casting (refer to Air intake - To remove).
2. Withdraw the vacuum signal hose to the speed control unit. Unscrew the two 7/16 in. A/F setscrews securing the unit to the air horn.
3. Remove the split pin, washer and clevis pin from the throttle linkage just forward of 'A' bank carburetter.

From 'B' bank side
4. Unscrew the union on the choke stove pipe at the bi-metal housing.
5. Unscrew the fuel feed pipe from 'B' bank carburetter filter housing. Suitably blank the open connections.
6. Remove the setscrew securing the crankcase emission control system pipe connection to the choke butterfly housing; withdraw the housing from the end of the pipe.
7. Detach the distributor vacuum advance signal hose from the 'Y' piece adjacent to the weakening device solenoid.
8. Disconnect the electrical cables to the choke solenoid at the snap connector joints adjacent to the choke butterfly housing.
9. Detach the electrical connections to the anti 'run-on' and the weakening device cut-off solenoids.
10. Disconnect the following hoses from the weakening device.
(a) the hose from the float chamber vent valve
(b) the hose to the air filter
(c) the hose from the fuel receiver
11. Unscrew the 7/16 in. A/F nut from the dipstick bracket; collect the bolt, nut and washer.
12. Unscrew the ½ in. A/F setscrew from the centre of the carburetter 'tee' piece; withdraw the setscrew and collect the washer.
13. Carefully withdraw the carburetter and air horn assembly, ensuring that no pipes, hoses or electrical items are still connected.

Carburetters and air horns assembly - To fit
Fit the carburetters by reversing the procedure given for their removal, noting the following points.
1. Ensure that all joint faces are clean.
2. Fit new gaskets.

Carburetters - To remove
Remove the carburetters and air horn assembly from the car (refer to Carburetters and air horn assembly - To remove) and then, remove the carburetters from the air horns assembly as follows.

'A' bank carburetter
1. Unscrew the two ½ in. A/F nuts securing the air horn to 'A' bank carburetter.
2. Withdraw the bolts and collect the washers.
3. Move the air horn flange upwards away from the carburetter.
4. Unscrew the union from the fuel filter.
5. Detach the vacuum supply hose from on top of the carburetter body adjacent to the carburetter and 'tee' piece flange.
6. Detach the hose from the side of the carburetter that connects to the fuel receiver in the weakening device.
7. Completely remove the two pinch bolts securing the throttle levers to the 'A' and 'B' bank carburetter butterfly spindles, remove the levers.
8. Unscrew the nut and withdraw the pinch bolt securing the fast-idle lever to the carburetter spindle; withdraw the lever.
9. Unscrew the four half-nuts that retain the carburetter to the 'tee' piece flange; collect the washers.
10. Withdraw the carburetter and collect the gasket.

'B' bank carburetter
1. With a screwdriver, unscrew and remove the two screws securing the solenoid platform in position adjacent to 'B' bank carburetter. One screw is located on the air horn and has a nut underneath, and the other screw is situated in the filter housing.
2. Unscrew the ½ in. A/F nuts from the bolts that retain the air horn to the carburetter flange; withdraw the bolts and collect the washers. Move the solenoid platform away from the carburetter.
3. Detach the hose from the side of the carburetter to the fuel receiver in the weakening device.
4. Carefully ease the air horn upwards away from the carburetter.
5. Completely remove the two pinch bolts securing the throttle levers to the 'A' and 'B' bank carburetter butterfly spindles, remove the levers.
6. Detach the vacuum supply hose from on top of the carburetter body adjacent to the carburetter and 'tee' piece flange.
7. Unscrew the remaining union from the fuel filter housing.
8. Unscrew the four half-nuts that retain the carburetter to the 'tee' piece flange; collect the washers.
9. Withdraw the carburetter and collect the gasket.

Printed in England
© Rolls-Royce Motors Limited 1978

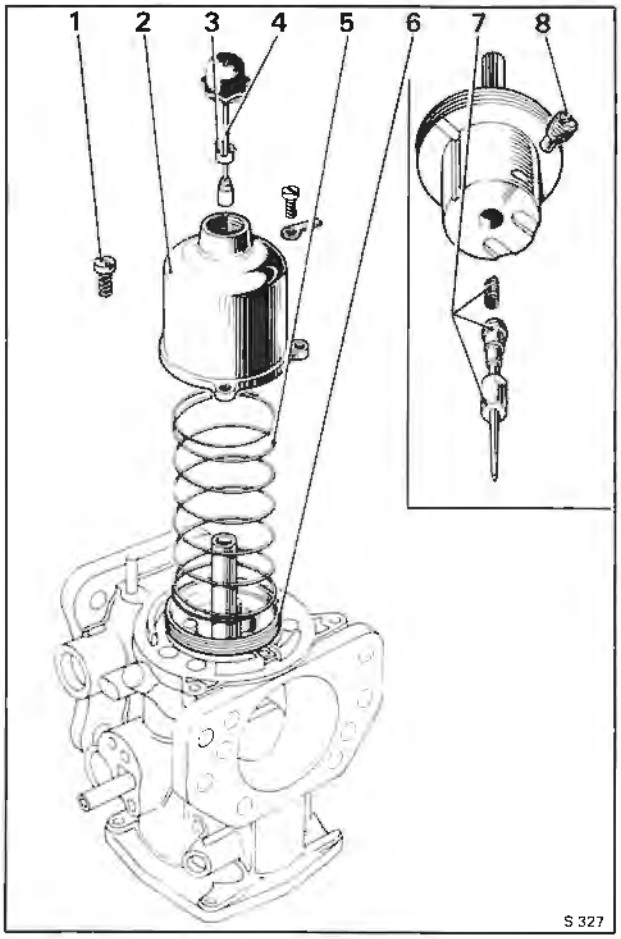

Fig. K80 Dismantling a carburetter (upper half)
1 Suction chamber retaining screw
2 Suction chamber
3 Damper retainer (Piston ball race clip)
4 Damper rod
5 Spring
6 Piston
7 Spring-loaded needle assembly
8 Needle guide locking screw

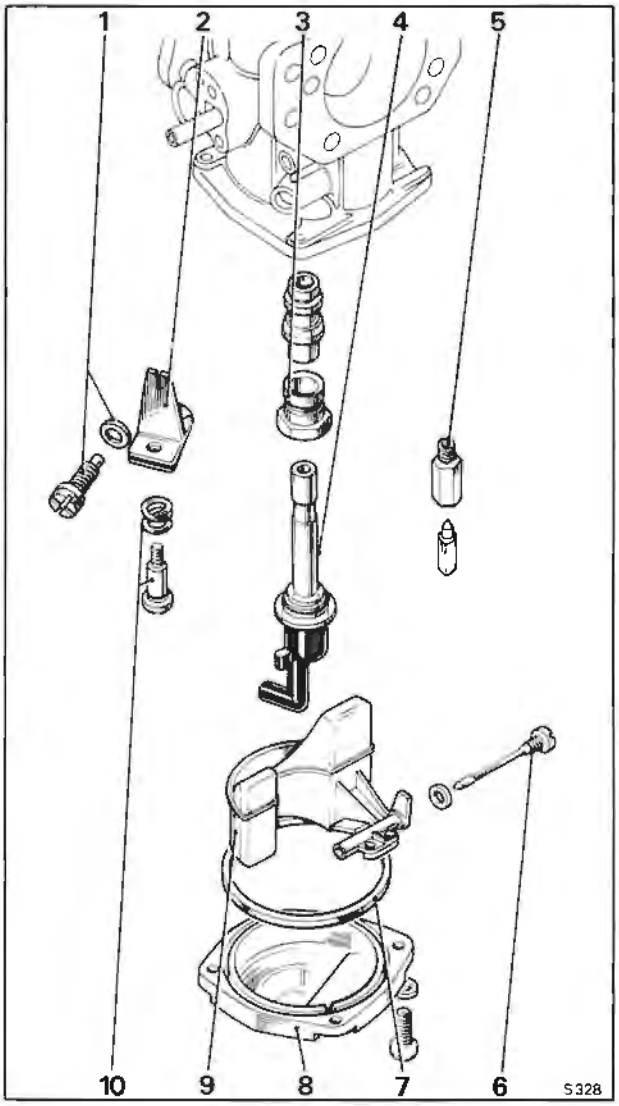

Fig. K81 Dismantling a carburetter (lower half)
1 Jet adjusting screw and 'O' ring
2 Jet adjusting lever
3 Jet bearing assembly
4 Jet
5 Float chamber needle valve
6 Float pivot spindle
7 Sealing ring
8 Bottom cover-plate
9 Float
10 Jet lever adjusting screw assembly

Dismantling of the components within the carburetters is not recommended as all carburetters are set and balanced by accurate flow measuring techniques during manufacture.

In certain isolated instances however, it maybe necessary to dismantle the carburetters and under these conditions the following procedure should be carefully followed.

Carburetter - To dismantle
Upper half (see Fig. K80)

1. Thoroughly clean the outside of the carburetter.
2. Unscrew the suction chamber retaining screws and remove the identity tag.
3. Lift the chamber assembly vertically from the body without tilting it.
4. Hold the piston firmly and pull the suction chamber, taking care not to bend the damper rod, until the damper retainer is freed from the piston rod. Unscrew and remove the damper.
5. Remove the piston spring, lift out the piston assembly and empty the oil from the piston rod.
6. Note the position of the needle guide etch mark in relation to the piston transfer holes for correct reassembly and unscrew the needle guide locking screw.
7. Withdraw the needle, guide and spring.

Lower half (see Fig. K81)
8. Mark the bottom cover-plate and body to ensure correct assembly, unscrew the retaining screws and remove the cover complete with the sealing ring.
9. Remove the jet adjusting screw complete with 'O' ring.
10. Remove the jet adjusting lever retaining screw and spring.
11. Withdraw the jet complete with adjusting lever and disengage the lever.
12. Remove the float pivot spindle and aluminium washer.
13. Withdraw the float.
14. Remove the needle valve and unscrew the valve seat.
15. Unscrew the jet bearing locking nut and withdraw the bearing complete with fibre washer.

Throttle disc assembly (see Fig. K82)
16. Remove the throttle disc retaining screws.
17. Close the throttle and mark the position of the throttle disc in relation to the carburetter flange. **Do not mark the disc in the vicinity of the overrun valve.** Open the throttle and carefully withdraw the disc from the throttle spindle taking care not to damage the overrun valve.
18. Withdraw the throttle spindle and remove the seals, noting the way it is fitted in relation to the carburetter body to ensure correct reassembly.

Carburetter - To inspect
1. Examine the throttle spindle and its bearings in the carburetter body; check for excessive play and fit new parts if necessary.
2. Examine the float needle and seating for damage and excessive wear; fit new parts if necessary.
3. Examine all rubber seals and 'O' rings for damage or deterioration; fit new parts if necessary. **The cover-plate sealing ring must be renewed.**
4. Examine the carburetter body for cracks and damage and for security of the brass connections and the piston key.
5. Clean the inside of the suction chamber and piston rod guide with fuel or methylated spirit (denatured alcohol) and wipe dry. **Abrasives must not be used.**
6. Examine the suction chamber and piston for damage and signs of scoring.
7. Check that all the balls are in the piston ball race (2 rows, 6 per row). Fit the piston into the suction chamber, without the damper and spring, hold the assembly in a horizontal position and spin the piston. The piston should spin freely in the suction chamber without any tendency to stick.

Carburetter - To assemble
Assemble the carburetter by reversing the procedure given for removal, noting the following points.

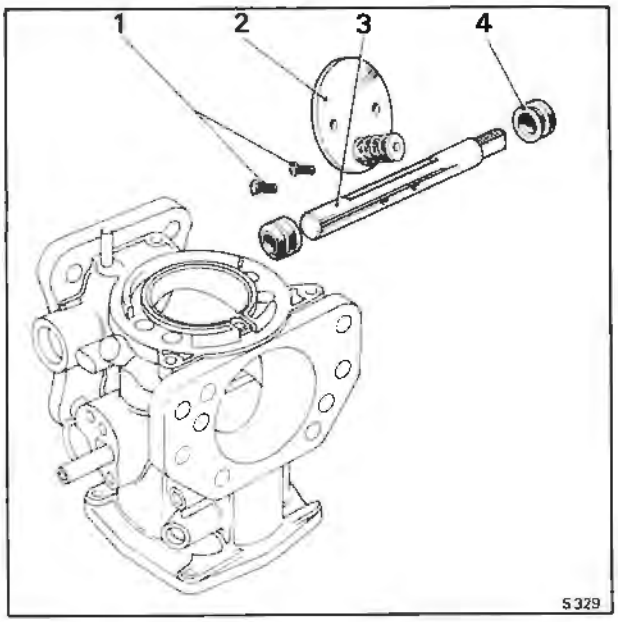

Fig. K82 Dismantling a carburetter (throttle disc assembly)
1 Throttle disc retaining screws
2 Throttle disc assembly
3 Throttle spindle
4 Seal

1. Ensure that the throttle disc is fitted in its original position.
2. New throttle disc retaining screws must be used when refitting the disc. Ensure that the throttle disc is correctly positioned and closes correctly before tightening the retaining screws. Spread the split ends of the screws sufficiently to prevent turning.
3. Position the throttle spindle end seals just below the spindle housing flange.
4. When fitting the jet assembly to the adjusting lever ensure that the jet head moves freely in the bi-metal cut-out.
5. Fit a new float pivot spindle sealing washer or anneal the existing washer.

Check the level of the float in the float chamber (refer to Carburetter float level - To set).
6. Check that the small diameter of the jet adjusting screw engages the slot in the adjusting lever and set the jet 3,05 mm. (0.12 in.) below the bridge of the body.
7. Ensure that the needle guide etch mark aligns correctly with the piston transfer holes. After fitting the needle assembly, check that the shoulder of the guide aligns with the face of the piston (see Fig. K78).
8. To prevent the piston spring from being 'wound up' during reassembly, temporarily fit the piston and suction chamber, less the piston spring, to the body and pencil mark their relative positions to each other. Fit the spring to the

Printed in England
© Rolls-Royce Motors Limited 1978

piston, hold the suction chamber above the piston, align the pencil marks and lower the chamber over the spring and piston.

Before assembly ensure that the damper retainer (piston ball race clip) is refitted by pressing it fully into the piston rod (see Fig. K83).

The damper retainer (piston ball race clip) can also be installed with the suction chamber fitted to the engine by using fitting tool RH 9086.

Carburetter float level - To set

1. Remove the carburetter from the engine.
2. Invert the carburetter.
3. Mark the bottom cover-plate and carburetter to ensure correct assembly, unscrew the retaining screws and remove the cover complete with the sealing ring.

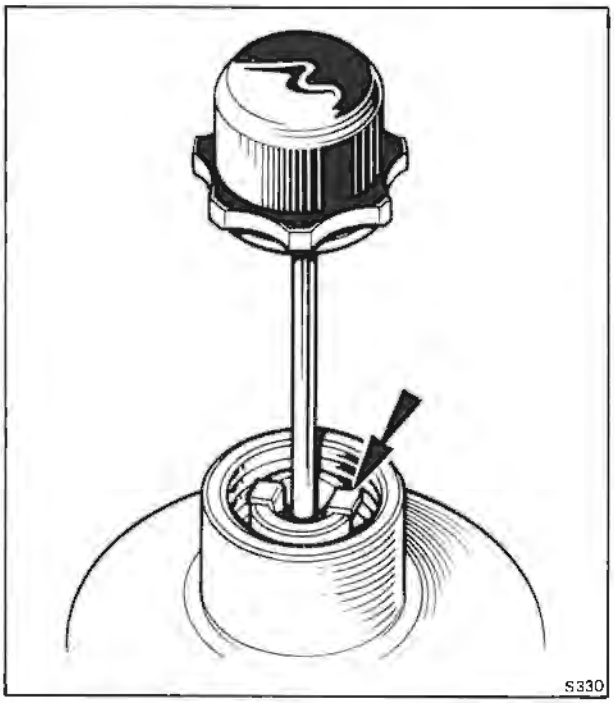

Fig. K83 Position of damper retainer

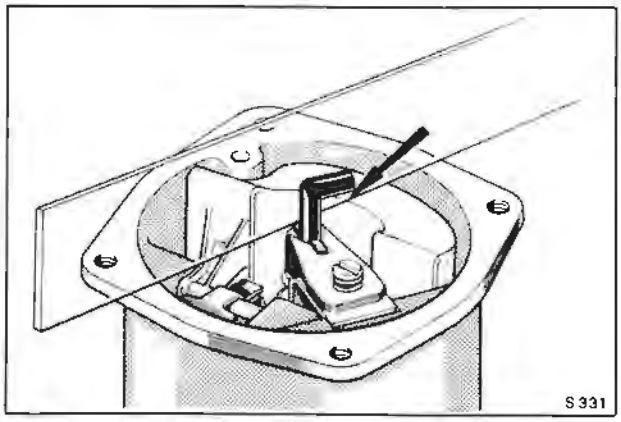

Fig. K84 Checking the float level

A new rubber sealing ring must be installed when fitting the cover-plate.

4. Ensure that the float chamber needle valve is held in the closed position by the weight of the float only.
5. Check that the lowest point on the float (see Fig. K84) is **below** the float chamber face by the dimensions given in the table.

Material	Colour	Dimension
Acetal Resin	White	0,51 mm.-1,52 mm. (0.020in.-0.060in.)

6. If necessary, adjust the float position by carefully bending the metal pad.
7. Check that the float pivots correctly about the spindle.

Carburetter air valve damper - To top-up

The upper portion of the guide spindle, attached to the air valve piston in each carburetter, is hollow and is filled with the same type of oil as used in the engine.

1. Unscrew the damper cap and carefully raise the damper until the damper, **together with the air valve piston,** reach the top of their travel. Ensure that the retainer is not displaced from its position in the piston rod (see Fig. K83).
2. Holding the damper and piston in the raised position; fill the recess in the damper retainer (piston ball race clip) with clean engine oil.
3. Lower the damper until the cap contacts the neck of the suction chamber, then carefully raise the damper and piston again and check the oil level; this is correct if the oil level is just visible in the bottom of the recess in the damper retainer (piston ball race clip). If the oil level is not visible, repeat the topping-up procedure until the oil level is correct.
4. Check that the damper retainer (piston ball race clip) is still in its correct position in the piston rod as shown in Figure K83, then lower the damper and screw the damper cap firmly into position.

Carburetters - To set

The carburetters fitted to these cars are adjusted at the factory using special equipment to ensure that their settings comply with the current emission control regulations.

Under normal circumstances the carburetters should not require adjustment in service.

If however, adjustment is found necessary due to inadvertent disturbance or replacement of a component,set the carburetters by carrying out the following operations in the sequence given.

a. Set throttle linkage and temporarily set engine idle speed. Check linkage clearances.
b. Set cold start fast-idle cam.
c. Tune carburetters.
d. Set cold start fast-idle speed.
e. Set the kickdown micro-switch.
f. Set full throttle stop.

Carburetter tuning

Preliminary checks
Before tuning the carburetters the following checks should be carried out.

Ensure that the vehicle is in 'Park', the parking brake firmly applied and that the gear range actuator thermal cut-off has been removed from the main fusebox.

1. Check the condition of the spark plugs.
2. Check the ignition timing (refer to Chapter M).
3. Check the flow through the choke stove pipe.
4. Check the entire induction system for air leaks.
5. Ensure that the air conditioning system is switched off.
6. Start the engine and warm-up; allow to run for at least 5 minutes after the thermostat has opened.
7. Stop the engine, ensure that the choke butterfly valve is fully open and the choke fast-idle off.
8. Connect an electric impulse tachometer in accordance with the manufacturer's instructions.
9. Check the float chamber depression.

Carburetter idle air balance
1. Ensure that the usual safety precautions are carried out (i.e. parking brake firmly applied, gear range selector lever in'Park', etc.) and connect an impulse tachometer in accordance with the manufacturer's instructions.
2. Disconnect the speed control chain.
3. Start and run the engine until normal operating temperature is attained.
4. Stop the engine.
5. Fit the dial gauges RH 8841 with RH 9105 (kit to convert dial gauges to fit the HIF7 carburetters) to the carburetter dashpots in place of the dampers.
6. Zero the gauges with the engine stopped and lightly tighten the gauge clamp screws.
7. Start and run the engine at the idle speed setting (650 r.p.m.); adjust the carburetter piston lifts to be equal (within 10%) using the eccentric adjuster (see Fig. K97).
8. The average piston lift reading should now be between 2,03 mm. and 2,54 mm. (0.080 in. and 0.100 in.).

If the idle speed piston lift is over 2,54 mm. (0.100 in.) check the ignition timing at idle as this condition may result in unsatisfactory driveability.

9. Stop the engine and remove the impulse tachometer.
10. Remove the dial gauges and fit the carburetter dampers. **Ensure that the dashpot ball race clips (piston damper retainers) are fitted correctly and are pressed fully into the piston rod (see Fig. K83) using tool RH 9086.**
11. Connect the speed control chain and adjust to give a minimum slack condition, consistant with no impediment to the throttle lever to return to the idle speed position.

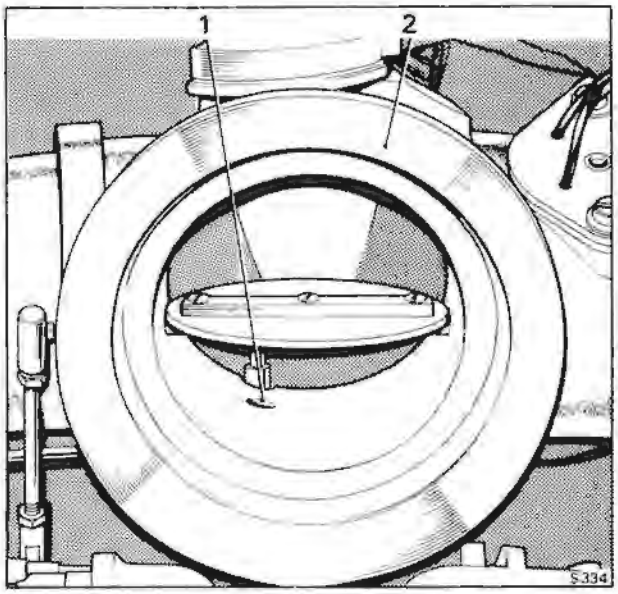

Fig. K85 Hot idle mixture compensator feed
1 Hot idle compensator feed
2 Air intake butterfly housing

Carburetter mixture strength - To set
1. Ensure that the usual safety precautions are carried out (i.e. parking brake firmly applied, gear range selector lever in'Park', etc.) and connect an impulse tachometer in accordance with the manufacturer's instructions.
2. Remove the air intake, blank off the hot idle compensator feed drilling (see Fig. K85) and replace the intake.
3. Unscrew and remove the pressure tapping cap from the weakening device.
4. Ensure that the engine has run for at least 25 minutes after the thermostat has opened.
5. Purge the engine at 2 000 r.p.m. in'Neutral'for ¼ minute. Allow the engine speed to return to the idle setting and ensure that this is 650 r.p.m.; adjust if necessary using the idle stop screw.
6. Insert the probe of a CO meter into either exhaust system tailpipe and check the reading.
7. The CO meter reading should be 1% to 4%. If the reading is outside the limits quoted
a. Check for induction system leaks (if below 1%)
b. Check the choke stove and purge line flow rates.
8. If after carrying out Operation 7 the idle speed CO meter reading is still outside the limits quoted the carburetter mixture screws (see Fig. K76) may be adjusted by equal amounts up to ½ turn in the same direction in order to achieve the mean limit of 2.5%.

Printed in England
© Rolls-Royce Motors Limited 1978

No attempt should be made to adjust the CO reading if it is in the region of 2.5% to 4.0%.

Note

a. Clockwise rotation of the mixture screws will richen the mixture.

b. The tuning operations should be carried out in the shortest possible time. If the time exceeds 3 minutes, run the engine at 2 000 r.p.m. in 'Neutral' for ¼ minute and then resume the tuning operations. Repeat this purging operation if a further period of 3 minutes is exceeded.

9. Fit the pressure tapping cap to the weakening device, fit a new sealing washer if necessary.

10. Check the idle speed, this should be 650 r.p.m.; adjust by means of the idle stop screw.

11. Stop the engine, remove the air intake and discard the blank from the hot idle compensator feed drilling; fit the air intake.

12. Remove the impulse tachometer.

Carburetter tamperproofing

The carburetter mixture screws may have tamper-proof caps fitted, therefore upon completion of the setting operations fit new caps.

Special tools have been designed and produced for the fitting of the tamperproof caps as follows.

'A' bank carburetter mixture screw cap - RH 9096

'B' bank carburetter mixture screw cap - RH 9097

Hot idle mixture compensator

This assembly is fitted below the choke strangler butterfly housing. Its purpose is to meter a small quantity of air into the induction under certain conditions.

At high engine temperature the idle quality may deteriorate after prolonged periods of idling unless a mixture compensator is used.

The compensator incorporates a bi-metallic valve which meters a small quantity of air (controlled by the carburetter air inlet temperature) to a point in the induction system downstream of the carburetter throttle plates. This has the dual effect of weakening the mixture and increasing the mass flow, thereby raising the idle speed slightly and restoring normal idle quality.

Hot idle mixture compensator - To service

1. If the operation of the assembly is suspect the carburetters and air horns assembly should be removed from the engine so that access may be gained to the two cheesehead screws retaining the bi-metallic valve cover in position.

2. Position the joint face horizontally, unscrew the two cover retaining screws and lift off the cover (if the joint face is in the vertical position the bi-metallic valve assembly will fall when the cover is withdrawn).

3. Collect the bi-metallic valve assembly and fibre sealing washer.

4. Inspect the bi-metallic valve assembly ensuring that it is clean (particularly around the valve seating area) and free to move in the bi-metal. Also ensure that the bi-metal is securely rivetted to the frame.

5. Assemble and fit the unit in the reverse order noting that a new fibre sealing washer should be fitted.

Weakening device

The mixture weakening device is fitted adjacent to 'B' bank carburetter and incorporates a fuel receiver.

For any given position of the fuel metering needle, the rate of the discharge from the carburetters is governed by the difference in air pressure existing over the fuel in the float chamber and that over the jet.

The weakening device is designed to reduce the air pressure (create a depression) in the float chamber at part throttle, thereby reducing the rate of discharge from the jet.

The weakening device housing contains two chambers (see Fig. K86) the venturi chamber and the fuel receiver chamber, the two being interconnected by a passage and an adjustable venturi.

The venturi chamber is connected to a small drilling on the edge of the butterfly plates of both carburetters via the weakening device solenoid valve. With the throttle slightly open the drillings are subjected to manifold depression thus creating a depression in the venturi chamber which draws air from the weakening device air filter. This depression is also apparent in the fuel receiver chamber and subsequently in the carburetter float chambers.

The value of the depression is set by the position of the weakening device adjusting screw.

To obtain adequate float chamber venting to cope with hot soak conditions there is an additional vent from the fuel receiver. This incorporates a low pressure non-return valve to maintain float chamber depression under normal running conditions.

A float chamber drain, also incorporating a low pressure non-return valve is mounted at the front of the engine adjacent to the oil filter, this valve is connected to the fuel receiver. Should flooding occur the head of fuel in the receiver is sufficient to open the drain valve thus preventing engine stalling if the float chamber needle valves stick.

Weakening device - To remove

1. Label all hoses connected to the weakening device assembly, this will facilitate assembly.

2. Disconnect all hoses to the weakening device.

3. Unscrew and remove the two small setscrews that retain the weakening device to the solenoid platform; the two screws are situated just below the pipe/hose connections for the anti 'run-on' solenoid and weakening device cut-off solenoid.

4. Withdraw the weakening device.

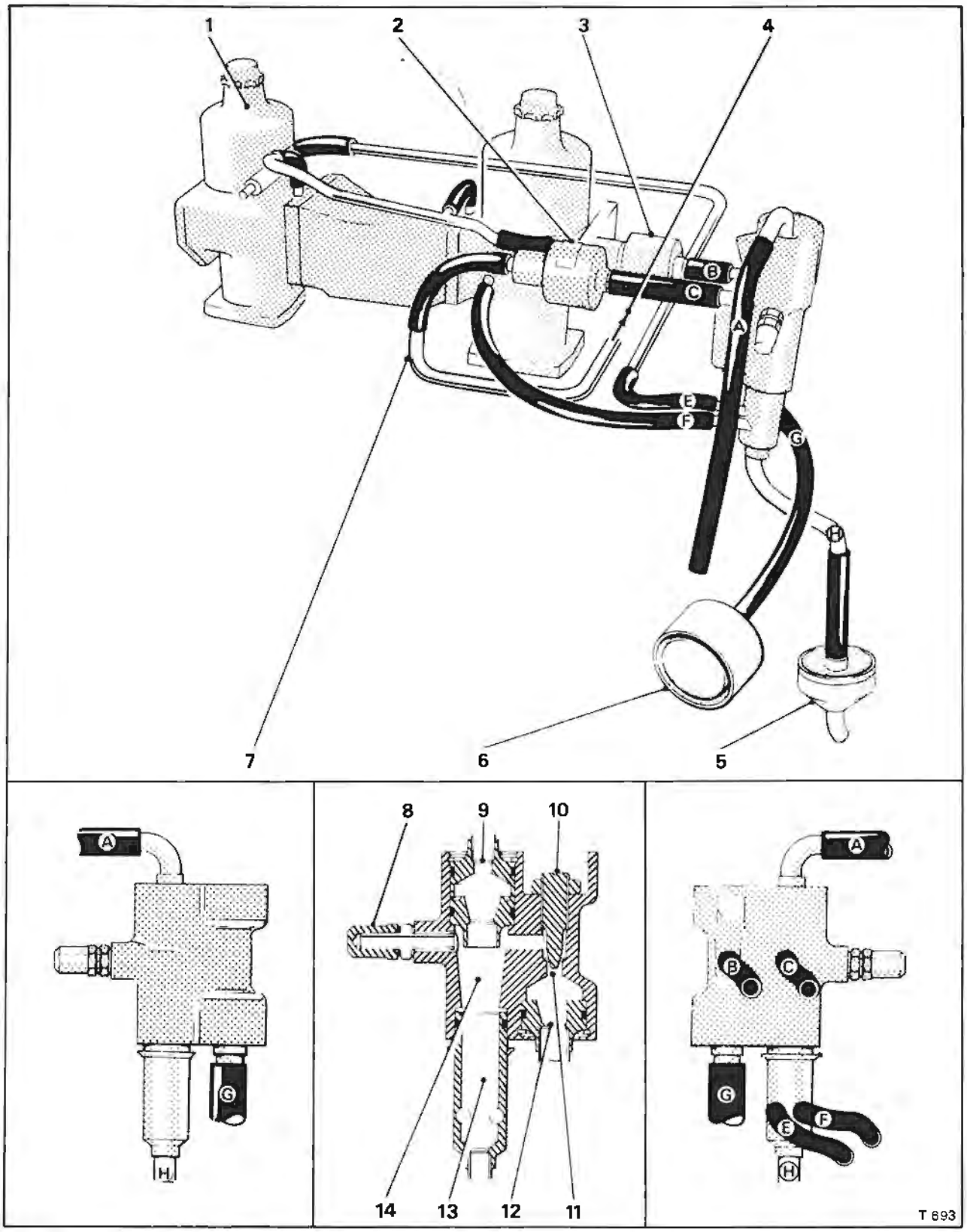

Fig. K86 Mixture weakening device

1 'A' bank carburetter
2 Anti 'run-on' solenoid
3 Weakening device cut-off solenoid
4 Induction manifold connection
5 Float chamber drain valve
6 Weakening system air filter
7 Vacuum manifold
8 Weakening device signal cap
9 Float chamber vent valve
10 Adjusting screw
11 Venturi chamber
12 Air inlet
13 Fuel receiver
14 Fuel receiver chamber

Printed in England
© Rolls-Royce Motors Limited 1978

Weakening device - To fit
Fit the weakening device by reversing the procedure given for removal, noting the following point.
1. Ensure that all hoses connecting to the assembly are in a good condition and that all connections are 'air tight'.

Weakening device - To dismantle (see Fig. K86)
1. Remove the weakening device from the vehicle.
2. Remove the small screw that secures the fuel receiver assembly into the base of the weakening device, withdraw the assembly.
3. Unscrew the weakening device signal cap, collect the cap fibre washer. Unscrew the signal line adapter from the casting and withdraw the aluminium washer from the adapter.
4. Remove the circlip from the top of the fuel receiver chamber, withdraw the float chamber vent pipe (slight resistance may be felt due to the rubber sealing ring). With a soft drift (e.g. wooden pencil), push the float chamber vent valve out of the weakening device assembly (the drift is required because the rubber sealing ring fitted around the vent valve will cause a small resistance).
5. Remove the circlip from the base of the venturi chamber, withdraw the **air intake pipe** containing a one-way valve (slight resistance may be felt due to the rubber sealing ring).
6. Remove the **anti-tamper cover** from the top of the venturi chamber, unscrew the lock-nut and using a screwdriver unscrew the adjusting screw.

Weakening device - To assemble
To assemble the weakening device, reverse the procedure given for removal, noting the following.
1. Ensure that all components are clean before assembly.
2. Ensure that the rubber sealing rings are in a good condition and lightly smeared with the minimum amount of grease. Ensure that no grease is applied to the valves otherwise a malfunction may occur due to the grease making the valves stick.
3. After assembly, the operator should check that he can blow but not suck on the metal pipes, one on top of the fuel receiver chamber and the other at the bottom of the venturi chamber.

Weakening device signal strength - To check
The **float chamber depression** should be checked as follows.
1. Start and run the engine until normal setting conditions are attained (i.e. engine cooling system thermostat opened, air conditioning unit switched off and the automatic choke is off).
2. Stop the engine.
3. Connect an electric impulse tachometer to the engine in accordance with the manufacturer's instructions.
4. Unscrew and remove the weakening device signal cap and connect a 0 to 15,2 cm. (0 to 6 in.) water manometer to the weakening device adapter.
5. Start and run the engine at 2 000 r.p.m. in 'Neutral' until a steady manometer reading is obtained, this should be 5,08 cm. (2.0 in.) of water depression.

A low or zero reading may be caused by
a. A blockage in the weakening device venturi.
b. A blockage or restriction in the signal pipe(s).
c. An air leak in the hoses or pipes from the float chambers to the fuel receiver.
d. Faulty float chamber vent valve or drain valve.
e. Low air intake temperature [below 14° C. (57° F.)], a faulty weakening device solenoid or weakening device switch.

A high reading may be caused by
a. An obstruction in the weakening device bleed orifice (weakening device signal strength adjusting screw).
b. Obstructed weakening device air filter.
c. Obstructed weakening device air filter hose.
d. Incorrect operation of anti 'run-on' solenoid.
6. If the float chamber depression is still incorrect after checking through the possible causes in Operation 5, set the weakening device signal strength (float chamber depression) by unlocking and turning the adjusting screw (see Fig. K86) until the correct manometer reading is obtained. Turning the adjusting screw clockwise increases the depression.
7. Raise the engine speed slowly noting both the manometer and tachometer readings. The maximum steady manometer reading should be obtained between 1 400 r.p.m. and 1 900 r.p.m.

Weakening device air filter - To remove
The air filter container is mounted on the left-hand valance just forward of the road spring pot.
This is a sealed unit and no attempt should be made to clean the element.
1. To remove the air filter assembly, detach the hose and unscrew the worm drive clip situated around the assembly.
2. Withdraw the assembly.

Weakening device air filter - To fit
Fit the air filter container by reversing the procedure given for removal.

Electrical components
The electrical components described in this section would normally appear in Chapter M - Electrical system, however, as they are used in connection with the weakening system it is thought more practical to include the information in this section.
The components concerned are as follows.

Weakening system cut-out switch
Anti 'run-on' solenoid
Weakening system cut-off solenoid

Weakening system cut-out switch
The bi-metal cut-out switch is situated in the side of the air intake elbow adjacent to the choke stove take-off pipe and 'B' bank carburetter (see Fig. K87).

Weakening system cut-out switch - To remove
1. Withdraw the protective sheath and detach the electrical connections, noting the position of the connections to assist identification when assembling.
2. Unscrew and remove the three setscrews and spring washers.
3. Withdraw the cut-out switch.

Weakening system cut-out switch - To fit
Fit the cut-out switch by reversing the procedure given for removal.
1. Ensure that the gasket is in a good condition.
2. The setscrews must be fitted with spring washers.
3. The protective sheath must be fitted over the electrical connections.

Weakening system cut-out switch circuit wiring - To check
1. Detach the White/Blue cable from the Weakening system cut-out switch.
2. Fit one side of a test lamp to the White/Blue cable and the other side to a good earth.
3. Switch on the ignition noting that the test lamp bulb illuminates.
4. Switch off the ignition noting that the test lamp bulb extinguishes.

Weakening system cut-out switch - To check
1. Connect a test lamp across the connections.
2. Carry out Operations 2 to 5 inclusive as given in Weakening system cut-off solenoid circuit wiring - To check.

Anti 'run-on' solenoid
The anti 'run-on' solenoid is situated on a platform adjacent to 'B' bank carburetter; it is the foremost of the two solenoids fitted on the platform.

The use of low octane fuel often causes an engine to 'diesel' (i.e. to continue to run-on after the ignition has been switched off, particularly when the engine is hot). To prevent this an anti 'run-on' solenoid is fitted between the fuel receiver and the induction manifold (see Fig. K86).
When the ignition is switched off the solenoid valve opens and connects the weakening system to the induction manifold, thus creating a high depression in the float chambers which cuts off the fuel supply.

Anti 'run-on' solenoid - To remove
1. Disconnect the rubber hose from either side of the solenoid.
2. Disconnect the two electrical leads at their connections.

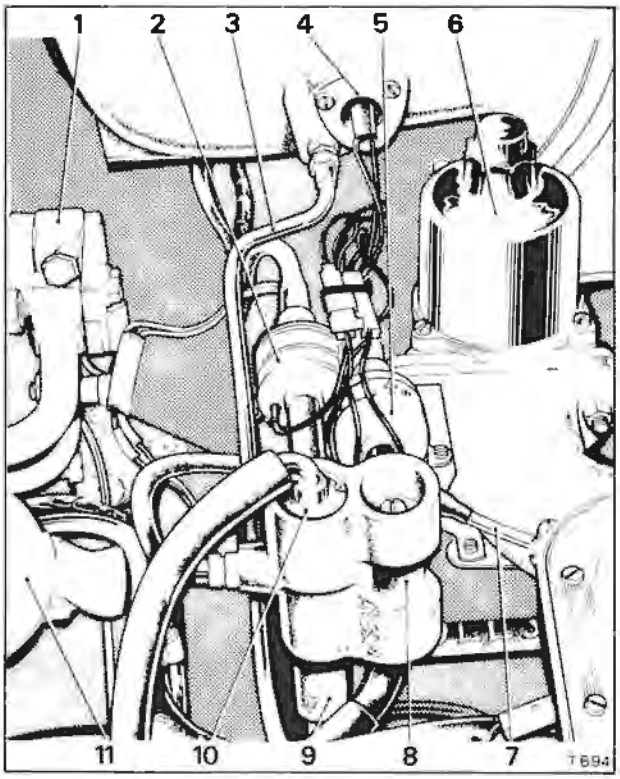

Fig. K87 Solenoid platform
1 Refrigeration compressor
2 Anti 'run-on' solenoid
3 Choke stove pipe
4 Weakening system cut-out switch
5 Weakening system cut-off solenoid
6 'B' bank carburetter
7 Distributor vacuum advance hose
8 Mixture weakening device
9 Fuel receiver
10 Float chamber vent valve
11 Engine oil filler cap

3. Unscrew and remove the two screws situated one on either side of the solenoid body.
4. Withdraw the anti 'run-on' solenoid.

Anti 'run-on' solenoid - To fit
Fit the anti 'run-on' solenoid by reversing the procedure given for removal.

Anti 'run-on' solenoid circuit wiring - To check
1. Connect a test lamp across the two electrical connections to the solenoid. **Do not disconnect the two connections.**
2. Switch on the ignition and check that the test lamp bulb illuminates.
3. Switch off the ignition and check that the test lamp bulb is extinguished.

Anti 'run-on' solenoid - To check
1. Ensure that the usual safety precautions are carried out (i.e. parking brake firmly applied, gear range selector lever in 'Park', etc.).

Printed in England
© Rolls-Royce Motors Limited 1978
December 1978
TSD 4200

2. Connect an impulse tachometer in accordance with the manufacturer's instructions.
3. Detach the weakening device pressure tapping cap and connect a manometer capable of reading 0 to 15,2 cm. (0 to 6 in.) of water to the tapping.
4. Start and run the engine at the idle speed setting (650 r.p.m.).
5. Switch off the engine and observe the reading on the manometer. The reading should momentarily increase to approximately 15,24 cm. (6.0 in.) as the engine stops.
6. If the reading does not increase, the operation of the anti 'run-on' solenoid is incorrect.

This could be caused by the following.

a. A blockage in the hose (see Fig. K86) from the anti 'run-on' solenoid to the weakening device.
b. A blockage in the hose (see Fig. K86) from the anti 'run-on' solenoid to the vacuum manifold or in the vacuum manifold.
c. Incorrect wiring to the anti 'run-on' solenoid.
d. Faulty anti 'run-on' solenoid.

Weakening system cut-off solenoid

The weakening system cut-off solenoid is the rearmost of the two solenoids mounted on the platform adjacent to 'B' bank carburetter (see Fig. K87).

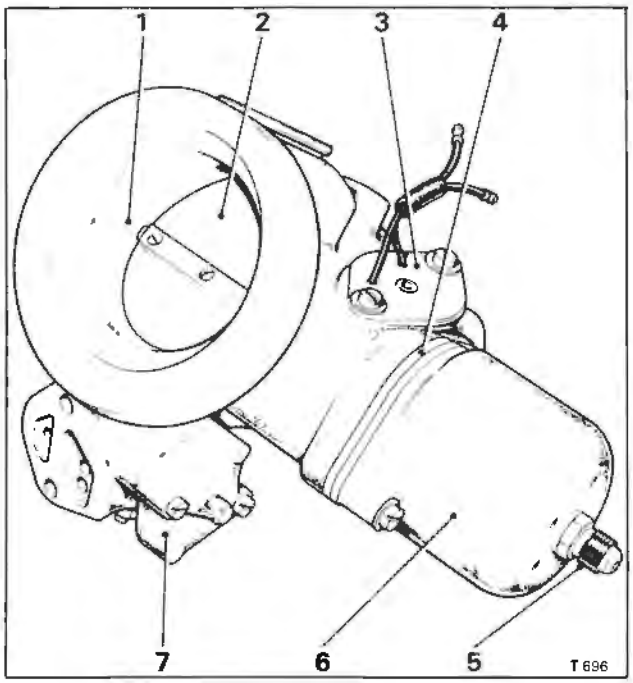

Fig. K88 Automatic choke assembly

1 Air intake (induction system)
2 Butterfly valve
3 Solenoid
4 Bi-metal spring assembly
5 Stove pipe connection/restrictor
6 Heat sink/bi-metal cover
7 Hot idle mixture compensator

Weakening system cut-off solenoid - To remove

1. Detach the electrical connections, noting the position of the connections to assist identification when assembling.
2. Detach the rubber hose from either side of the solenoid.
3. Unscrew the two 'cheese-headed' mounting screws and withdraw the solenoid.

Weakening system cut-off solenoid - To fit

Fit the cut-off solenoid by reversing the procedure given for removal.

Weakening system cut-off solenoid circuit wiring - To check

1. Connect a test lamp across the two connections to the solenoid. **Do not disconnect the two connections.**
2. Ensure the engine is cold.
3. Switch on the ignition and start the engine noting that the bulb of the test lamp is illuminated.
4. Run the engine; noting that as the engine warms-up [the inlet air temperature reaches approximately 14° C. (57° F.)] the test lamp bulb should extinguish.
5. Stop the engine and allow to cool, noting that when the engine becomes cold [the air in the intake drops to a temperature of approximately 12° C. (54° F.)] the test lamp bulb again illuminates.

Weakening system cut-off solenoid - To check

1. Detach the carburetter vacuum signal to weakening system cut-off solenoid hose at the solenoid and blank off the hose.

Connect a suitable length of hose to the solenoid connection.

2. Clean the open end of the additional hose.
3. Switch on the ignition.
4. Place the hose in the mouth and apply pressure.
5. If the operation of the solenoid is correct note that the following conditions apply.

a. With a cold engine [i.e. the inlet air temperature below approximately 14° C. (57° F.)] blowing air through the hose should not be possible.
b. As the engine warms-up [i.e. an inlet air temperature of approximately 14° C. (57° F.) or above] blowing air through the hose should be possible.
c. As the engine again cools [i.e. the inlet air temperature drops below approximately 12° C. (54° F.)] the conditions described in (a) should again apply.

Automatic choke system

The engine induction system is provided with an automatic choking device to improve starting with a cold engine. The automatic choke system comprises five main features.

1. An out of balance **butterfly valve** in the butterfly housing.
2. A small **solenoid** wired in parallel with the starter relay circuit and in series with a thermal delay switch and a temperature sensitive switch.

3. A **fast-idle cam**, coupled to the butterfly spindle via a rod.

The fast-idle cam is tapered to provide a progressive closing of the throttle.

4. A **bi-metal coil**, coupled to the butterfly shaft and sensitive to hot air from the exhaust (choke stove).

Operation

Before starting the engine, depress the accelerator pedal; with a cold engine this will release the fast-idle cam and allow the bi-metal coil to close the butterfly valve.

On releasing the accelerator pedal, the throttle stop rests on the highest point of the fast-idle cam, thereby giving a greater degree of throttle opening than is obtained from normal idling.

As the engine warms-up, the bi-metal coil will start to open the butterfly, thereby allowing the throttle stop to rest on a lower part of the fast-idle cam and giving a smaller degree of throttle opening.

Operation of the automatic choke solenoid is dependent on the under bonnet temperature of the car. If the temperature is below 0° C. (32° F.) a thermal time switch will energise the choke solenoid for a specified period dependent upon the starting temperature. The heating coil within the switch is energised as soon as the alternator develops its full charge. When the thermal time switch cuts out the solenoid will release the choke butterfly valve.

As the engine continues to run, the choke solenoid is cut out and the movement of the choke butterfly is then controlled by the bi-metal coil. The bi-metal coil is temperature sensitive and heated by air from the exhaust manifold stove pipe. As the bi-metal coil warms-up it is gradually wound up, thus releasing the load on the butterfly spindle which will gradually open.

With the depression of the accelerator pedal for driving away, the fast-idle stop on the throttle spindle will move away from the fast-idle cam and the cam will fall onto the cam link pick-up lever which is coupled by a rod to the choke butterfly spindle.

The loading of the bi-metal coil and the radiused section and offset of the choke butterfly have been arranged so that any required air flow greater than that for fast-idle conditions will open the butterfly against the loading of the bi-metal coil, sufficiently for engine demand.

When the butterfly valve is nearly fully open it comes into contact with a spring loaded plunger, this holds the fast-idle stop on the tip of the cam for an extended period until the force of the bi-metal coil is sufficient to depress the spring loaded plunger. This maintains a certain degree of fast-idle without enrichment.

Automatic choke assembly - To remove

1. Remove the carburetter and air horns assembly from the engine (refer to Carburetter and air horns assembly - To remove).

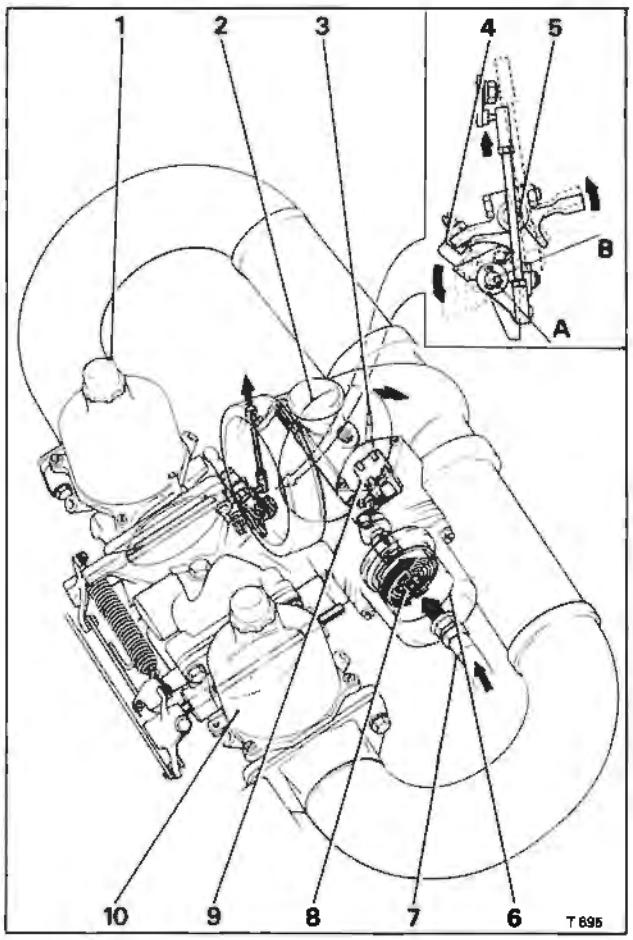

Fig. K89 Automatic choke system

1 'A' bank carburetter
2 Crankcase emissions connection
3 Extended fast-idle plunger
4 Fast-idle cam
5 Throttle spindle
6 Heat sink
7 Stove pipe
8 Bi-metal coil
9 Solenoid
10 'B' bank carburetter
A Choke closed/on
B Choke open/off

2. Unscrew the two ½ in. A/F nuts securing the air horn to 'A' bank carburetter. Withdraw the bolts and collect the washers.

3. Commence moving the air horn up and down whilst carefully withdrawing it from the automatic choke housing. The air horn is sealed into the housing by a rubber 'O' ring.

4. Remove 'B' bank air horn in a similar manner, noting that the solenoid platform should also be removed.

5. Slacken the lock-nut on either end of the butterfly rod and unscrew the rod (see Fig. K93).

Printed in England
© Rolls-Royce Motors Limited 1978
December 1978
TSD 4200

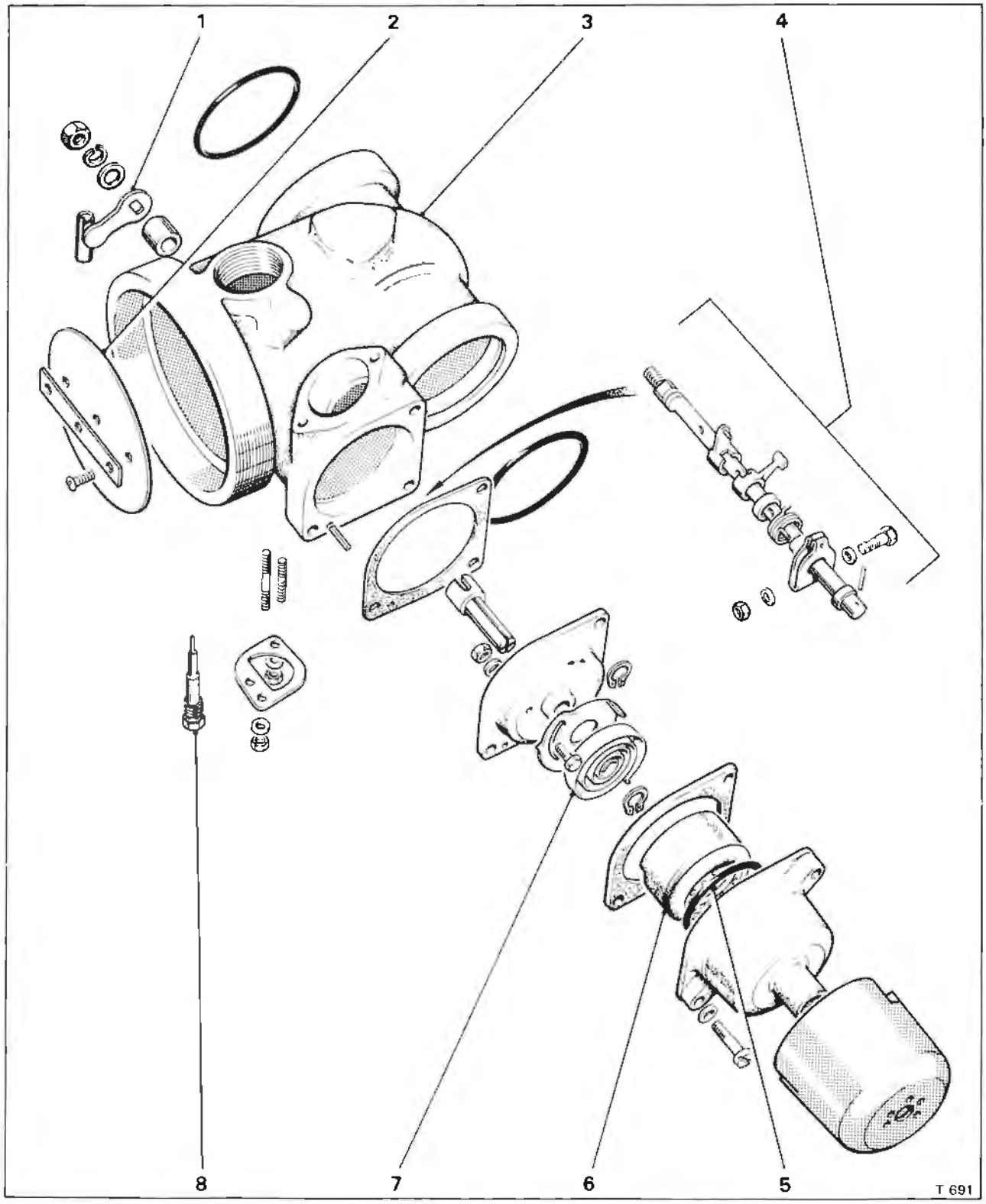

Fig. K90 Automatic choke assembly (exploded)

1 Control rod lever
2 Butterfly valve
3 Choke housing
4 Butterfly spindle assembly
5 Sealing ring
6 Heat sink
7 Bi-metal spring
8 Extended fast-idle plunger

6. Unscrew the two ½ in. A/F nuts securing the automatic choke assembly to the hot idle mixture compensator housing and carburetter 'tee' piece, collect the washers.
7. Withdraw the automatic choke housing.

Automatic choke assembly - To fit
Fit the assembly to the carburetter and air horns by reversing the procedure given for removal, noting the following.
1. Always fit new seals and gaskets.
2. Ensure that the length of the butterfly rod is correctly set (see Fast-idle - To set).

Automatic choke assembly - To dismantle (see Fig. K90)
1. Unscrew the 2B.A. nut retaining the butterfly rod connecting link to the choke butterfly spindle on 'A' bank side of the choke housing; collect the spring washer, plain washer and connecting link from the spindle.
2. Close the legs of the three screws retaining the choke strangler butterfly valve to the spindle. Unscrew the screws, collect the bridge piece and withdraw the butterfly valve.
3. Unscrew the two screws retaining the solenoid assembly in position, collect the plain washer fitted under the head of each screw.
4. Withdraw the solenoid from the choke housing, note the shim washers fitted under the solenoid seating flange. Remove the shim washers.
5. Unscrew the union from the choke bi-metal housing. Withdraw the insulated cover end collect the washers fitted to the union one on either side of the cover.
6. Remove the two screws retaining the metal cover and bi-metal assembly to the choke housing, collect the plain washer fitted to each screw.
7. Withdraw the cover assembly.
8. Position a small screwdriver through the threaded hole in the end of the bi-metal cover and carefully push the heat sink out of the housing (the heat sink is fitted with a sealing ring and therefore slight resistance will be encountered as the heat sink is pushed out of the housing).
9. Withdraw the gasket.
10. The complete bi-metal coil assembly should be carefully 'prised' from the choke housing using a small screwdriver. A paper gasket is situated between the assembly and housing; the choke housing joint face is coated with 'Wellseal'.

Note
The bi-metal coil setting should not be adjusted es it is pre-set at the factory during manufacture.

11. Withdraw the choke spindle assembly.
12. Dismantle the spindle noting the relative position of the components (see Fig. K90).

Automatic choke assembly - To assemble
Assemble the automatic choke assembly by reversing the procedure given for dismantling, noting the following.
1. Always fit new sealing rings and gaskets.
2. Do not disturb the bi-metal coil setting.
3. Use three new screws to retain the choke strangler butterfly to the choke spindle and open the 'split legs' of the screws to lock them in position.

Automatic choke - Setting during assembly

Solenoid air gap (see Fig. K91)
1. Ensure that the choke strangler butterfly valve is firmly closed.
2. Check that the air gap (between the solenoid lever pad and the solenoid) with a feeler gauge, this should be between 0,038 mm. and 0,063 mm. (0.0015 in. and 0.0025 in.).
3. Add or subtract shims between the solenoid seating flange and choke housing to obtain the required setting.

Solenoid lever spring tension (see Fig. K92)
1. Produce a lever 5,08 cm. (2 in.) between centres to fit the choke spindle as shown in Figure K92. Secure the lever in the horizontal position using a 2 B.A. nut and washer.
2. Hang a weight of 233,88 gm. (8.25 oz.) from the lever.
3. Connect a fully charged 12 volt battery to the solenoid connections. This should open the choke strangler butterfly valve sufficiently to allow a 1,58 mm. (0.062 in) diameter drill to be inserted between the butterfly valve and body.
4. Adjustment of the spring tension can be effected by slackening the clamp locking nut and rotating the clamp on the choke spindle.

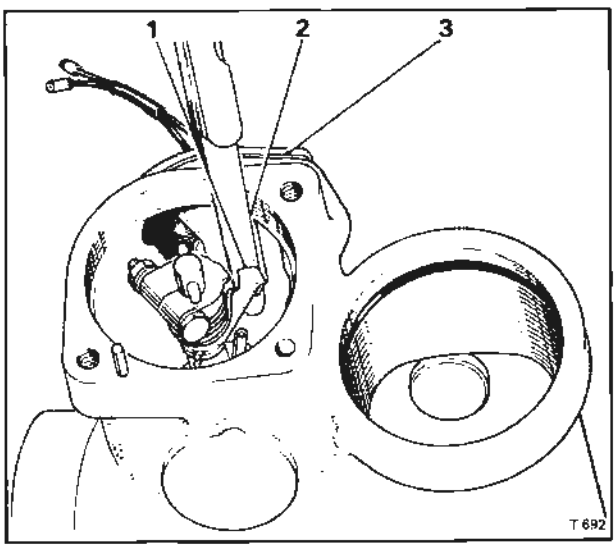

Fig. K91 Solenoid adjustment
1 Butterfly lever
2 Feeler gauge in position
3 Adjusting shims

Printed in England
© Rolls-Royce Motors Limited 1978
December 1978
TSD 4200

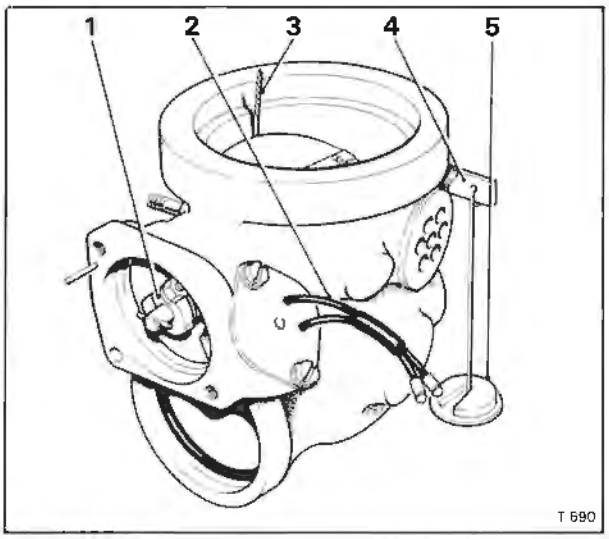

Fig. K92 Lever spring tension
1 Clamp adjuster
2 Solenoid electrical connections
3 1,58 mm. (0.062 in.) diameter drill
4 Lever
5 Weight

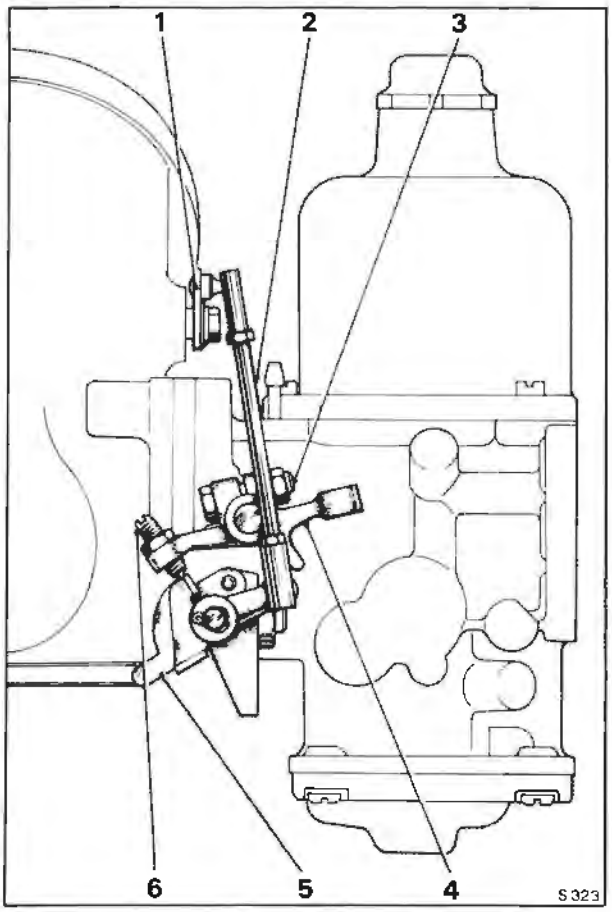

Fig. K93 Fast-idle mechanism
1 Control rod lever
2 Butterfly rod
3 Lever clamp bolt
4 Fast-idle lever
5 Cam
6 Adjusting screw

Fast-idle mechanism

1. Assemble the mechanism onto 'A' bank carburetter as shown in Figure K93.
2. Do not tighten the lever clamp nut and bolt (item 3).
3. Ensure that the adjusting screw (item 6) is in line with the fast-idle cam (item 5).
4. Insert the shank of a 2,54 mm. (0.10 in.) diameter drill between the top of the fast-idle cam and the boss carrying the fast-idle adjusting screw. Tighten the lever clamp bolt (item 3).
5. Fit the automatic choke assembly.
6. Screw the slow idle screw inwards until it contacts the stop bracket.
7. Fit the fast-idle adjusting screw and screw it inwards until it contacts the bottom of the fast-idle cam. Screw inwards a further three-quarters of a turn. Tighten the lock-nut.
8. Fit the butterfly rod (item 2).
9. Hold the choke strangler butterfly valve fully open (i.e. the spring loaded plunger must be fully depressed and the butterfly valve resting on the plunger pedestal body.
10. Adjust the length of the butterfly rod so that there is a small air gap between the 'pip' of the fast-idle screw and the tip of the fast-idle cam. Tighten the rod lock-nuts.

Fast-idle - To set

These instructions apply to cars destined for countries other than Australia, Canada, Japan and U.S.A., for details applicable to these countries refer to the appropriate section of Chapter U.

1. Ensure that the necessary safety precautions are carried out (i.e. parking brake firmly applied, gear range selector lever in 'Park' position, etc.). Connect an impulse tachometer in accordance with the manufacturer's instructions.
2. Disconnect the distributor vacuum advance hose from the capsule and blank the hose.
3. Start and run the engine until normal operating temperature is attained. Stop the engine and remove the pressure tapping cap from the weakening device.
4. Open the throttle and close the choke strangler butterfly against the bi-metal tension using the control rod lever (Fig. K93, item 1), until the adjusting screw (Fig. K93, item 6) is resting on the tip of the fast-idle cam. At this point an extra load will be felt due to the action of the extended fast-idle plunger ceasing.
5. Start the engine, if the speed is outside a range of 850 r.p.m. to 900 r.p.m., stop the engine, open the throttles to gain access to the adjusting screw and turn the screw approximately ⅛ of a turn for each 20 r.p.m. required. Tighten the lock-nut.
6. Start the engine and again check the fast-idle speed.
7. When the engine speed has been adjusted to within the prescribed limits open the throttles to release the fast-idle mechanism.
8. Stop the engine, remove the blank from the

distributor vacuum advance hose and fit the hose to the vacuum advance capsule.
9. Fit the pressure tapping cap to the weakening device.
10. Finally adjust the idle speed as follows. Remove the air intake trunking and blank off the hot idle compensator feed drilling, again fit the trunking.
11. Start the engine and check the idle speed. If necessary set to 650 r.p.m. by adjusting the throttle stop screw.
12. Stop the engine, remove the air intake trunking, unblank the hot idle mixture compensator feed drilling and again fit the trunking. Remove the tachometer.

Choke stove pipe - To flow check
1. Ensure that the usual safety precautions are carried out (i.e. parking brake firmly applied, gear range selector lever in 'Park' etc.) and connect an impulse tachometer in accordance with the manufacturer's instructions.
2. Start and run the engine until normal operating temperature is attained. Stop the engine.
3. Disconnect the stove pipe union at the intake elbow (see Fig. K87) and connect a flowmeter to the pipe via a connector (RH 8945). The flowmeter must be a rotameter type capable of measuring 2,9 cu.m/hr. (100 cu.ft/hr.).
4. Start and run the engine at idle speed (650 r.p.m.); observe the flowmeter, a correct reading is between 1,41 cu.m/hr. and 1,55 cu.m/hr. (50 cu.ft/hr. and 55 cu.ft/hr.).
5. If the flow is less than 1,41 cu.m/hr. (50 cu.ft/hr.) check the choke stove assembly, pipes and unions for leaks.
6. If the flow is in excess of 1,55 cu.m/hr. (55 cu.ft/hr.), fit a new restrictor in the choke bi-metal housing.
7. To fit a new restrictor, replace the union in the bi-metal cover.

Printed in England
© Rolls-Royce Motors Limited 1978

Section K6

Air intake systems

Printed in England
© Rolls-Royce Motors Limited 1978
December 1978
TSD 4200

Introduction
There are two types of air intake system. One is temperature sensitive and has an underwing cleaner and rubber trunking connected to twin S.U. HIF7 carburetters (see Fig. K94). The other has a flat pan type air cleaner with twin intake horns mounted over a Solex 4A1 carburetter as shown in Figure K96.

S.U. HIF7 carburetter air intake system

This underwing temperature controlled air intake system comprises.

Air cleaner/silencer
Cold air intake
Air blending valve
Paper air filter element
Hot air pick-up
Resonator
Temperature sensor

Air cleaner/silencer
The air cleaner/silencer assembly is secured to the valance plate under the front right-hand wing.

The cold air intake has an air blending valve. From a cold start the valve is in the closed position, allowing only warm air to enter from the hot air pick-up. When the control temperature has been attained, the sensor reduces the vacuum signal to the blending valve which controls the proportions of cold and warm air to maintain a constant intake temperature. At maximum opening of the throttles, the vacuum signal falls causing the blending valve to adopt its full 'cold air' position for maximum performance.

The paper air filter element is mounted horizontally into the air cleaner/silencer and secured by a central stud, locating plates and hexagonal extended nut. The carburetter intake air passes via the filter and trunking to the intake elbow.

Hot air pick-up
The hot air pick-up is mounted above 'A' bank exhaust manifold and is connected to the air cleaner/silencer by a rubber trunking. Warm air from around the exhaust manifold is used to raise the temperature of the intake air under cold start conditions.

Resonator
The resonator is fitted into the rubber trunking between the air cleaner/silencer and the carburetter air intake elbow. It reduces resonance or noise in the intake system.

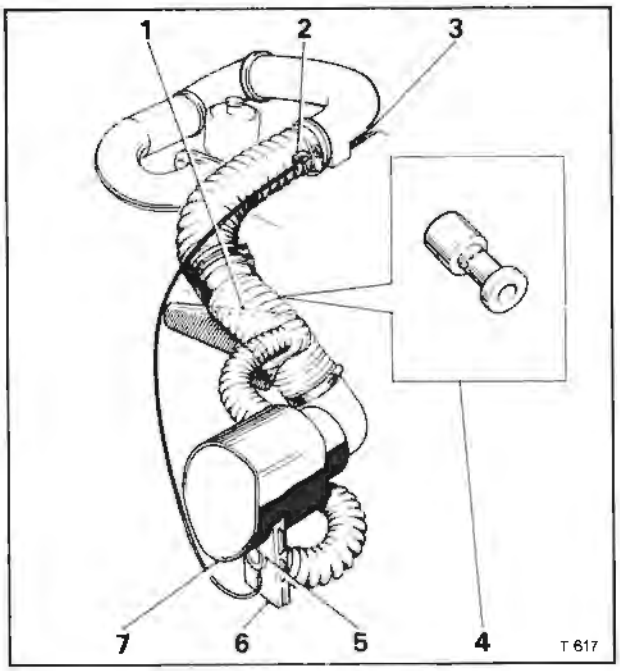

Fig. K94 S.U. HIF7 carburetters air intake system
1 Hot air scoop
2 Temperature sensor
3 Manifold vacuum hose
4 Resonator
5 Air blending valve
6 Cold air intake
7 Air cleaner/silencer

Temperature sensor (see Fig. K95)
The temperature sensor is mounted in the carburetter air intake elbow and operates the air blending valve. A bi-metal strip senses changes in the air intake temperature and regulates the vacuum signal to the blending valve which varies the proportions of cold and hot air to maintain a constant air intake temperature.

The sensors are colour coded white (or natural) and are pre-set to control at 20° C. (68° F.). The only exceptions are the sensors fitted to cars destined for Japan which have a yellow spot on the top face and pre-set to 0° C. (32° F.).

Air filter element - To remove and fit
1. Unscrew the knurled setscrew located in the

centre of the air filter cover; withdraw the cover together with the trunking.
2. Remove the hexagonal nut from the central stud; withdraw the filter element and the two end plates.
3. To fit the new element reverse the removal procedure.

Air cleaner/silencer - To remove
1. Carry out the procedure for removing the air filter element.
2. Raise the front of the car and support the car on suitable stands.
3. Remove the right-hand front wheel (see Chapter R).
4. Remove the front underwing sheet.
5. Disconnect the trunking from the hot air duct. Also disconnect the vacuum hose connected to the air blending valve.
6. From inside the engine compartment unscrew the six 7/16 in. A/F setscrews retaining the air cleaner/silencer; withdraw the air cleaner/silencer together with the cork gasket.

Air cleaner/silencer - To fit
To fit the air cleaner/silencer reverse the procedure given for removal, noting the following.
1. Fit a new cork gasket to the air cleaner/silencer mounting face.
2. Check the vacuum hose for deterioration; renew if necessary.

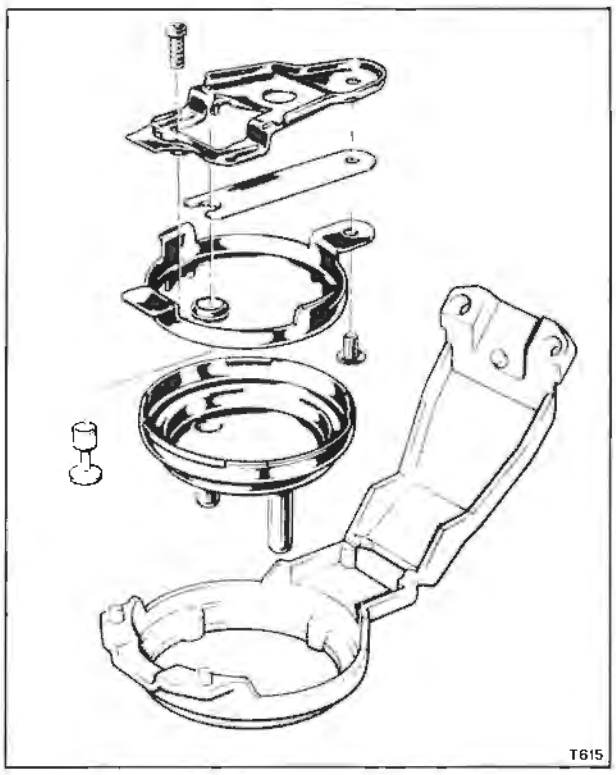

Fig. K95 Temperature sensor

Hot air pick-up - To remove and fit
1. Slacken the worm drive clips situated around the forward section of the carburetter air intake trunking; remove the trunking.
2. Slacken the worm drive clip situated around the hot air pick-up trunking; remove the trunking.
3. Remove the two 7/16 in. A/F nuts and washers securing the hot air pick-up to the inner longeron captive bolts; withdraw the pick-up.
4. To fit the hot air pick-up reverse the removal procedure.

Resonator - To remove and fit
1. Slacken the two worm drive clips situated at the centre of the rubber trunking which connects the air cleaner/silencer to the carburetter intake elbow. Ease the clips along the trunking.
2. Remove the trunking from the resonator; withdraw the resonator.
3. To fit the resonator reverse the removal procedure.

Temperature sensor - To remove
1. Disconnect the electrical connection at the cut-out switch fitted into the carburetter intake elbow.
2. Unscrew the ½ in. A/F choke stove pipe connection at the carburetter intake elbow.
3. Slacken the worm drive clip securing the intake trunking to the elbow and remove the trunking.
4. Remove the 7/16 in. A/F setscrew and washer securing the intake elbow to the thermostat housing bracket; remove the elbow from the choke housing.
5. Remove the sensor vacuum pipe connections; withdraw the intake elbow.
6. Suitably position the inverted intake elbow on a bench and carefully remove the sensor securing clip; withdraw the sensor.

Temperature sensor - To fit
To fit the temperature sensor reverse the procedure given for removal noting the following points.
1. A new securing clip must be used when fitting the sensor to the air intake elbow.
2. Ensure that the vacuum pipes fitted underneath the sensor do not become trapped (by poor alignment) when the intake elbow is fitted into the choke housing.

Solex 4A1 carburetter air intake system

The flat pan type air intake is mounted on top of the carburetter. It is supported from the air intake horns by two struts which locate onto the forward loom retaining studs of the rocker covers.

A knurled nut secures the air intake onto the central locating stud situated in the top cover of the carburetter. An engine breather pipe connects the oil filler housing on 'B' bank cylinder head with the underside of the air intake.

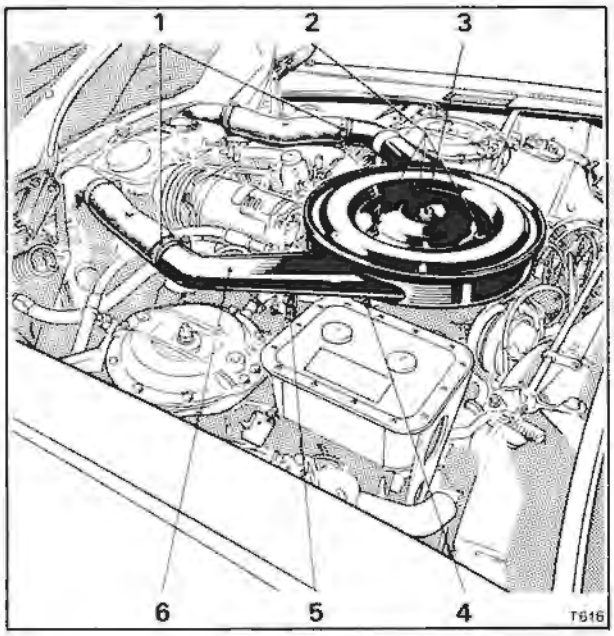

Fig. K96 Solex 4A1 carburetter air intake system

1 Intake horn trunking clips
2 Filter cover cap nuts
3 Knurled securing nut
4 Engine breather pipe clip
5 Domed nut (intake support legs)
6 Intake horn

Air is drawn through the intake horns from the vicinity of the radiator and passes through the paper air filter element before entering the carburetter.

Flat pan air intake - To remove and fit

1. Using a 7/16 in. A/F spanner unscrew the domed nuts securing the air intake assembly struts to the rocker covers; collect the nuts and washers.
2. Slacken the worm drive clip securing the engine breather pipe to the oil filler on 'B' bank cylinder head; remove the pipe from the housing.
3. Slacken the worm drive clips (if fitted) at the intake horn end of the rubber trunking; withdraw the trunkings from the intake horns.
4. Unscrew the knurled nut from the centre of the filter housing.

To remove the air intake, withdraw the support struts from the rocker cover studs and lift upwards.
5. To fit the air intake reverse the removal procedure, noting that the rubber sealing ring fitted between the carburetter and air intake must be in a good condition.

Flat pan air filter element - To remove and fit

1. Remove the three 7/16 in. A/F cap nuts which secure the filter cover.
2. Remove the central securing knurled nut from the filter assembly.
3. Lift up the filter cover and withdraw the filter element.
4. To fit a new filter element reverse the removal procedure.

Printed in England
© Rolls-Royce Motors Limited 1978
December 1978
TSD 4200

Section K7

Throttle linkage

Printed in England

Introduction
The S.U. HIF7 carburetters assembly has right-hand and left-hand drive linkage for all Silver Shadow II, Bentley T2 and Silver Wraith II motor cars. In addition, this linkage is also fitted to Corniche and Camargue cars destined for Australia, Canada, Japan and the U.S.A.

The Solex 4A1 carburetter has linkages for both right-hand and left-hand drive Corniche and Camargue cars destined for countries other than Australia, Canada, Japan and the U.S.A.

The contents of this section are as follows.

S.U. HIF7 carburetters

Carburetter throttle linkage - To fit and set
All cars except those destined for Australia, Canada, Japan and U.S.A. For details applicable to these cars refer to the appropriate model year of Chapter U.

Accelerator pedal and isolator mechanism - To set
Right-hand drive cars.
Left-hand drive cars not fitted with an emission control system.
Left-hand drive cars fitted with an emission control system.

Solex 4A1 carburetter
Carburetter throttle linkage, accelerator pedal and isolator mechanism - To set
Right-hand drive cars.
Left-hand drive cars.

S.U. HIF7 carburetters

Carburetter throttle linkage - To fit and set (see Fig. K97)

1. Assemble 'A' bank and 'B' bank throttle levers (items 6 and 11) onto the carburetter spindles.
2. Fit the setting jig (RH 8880) into position on the throttle levers.
3. Fully close 'B' bank carburetter butterfly (item 7).
4. Tighten the pinch bolt securing 'B' bank throttle lever.

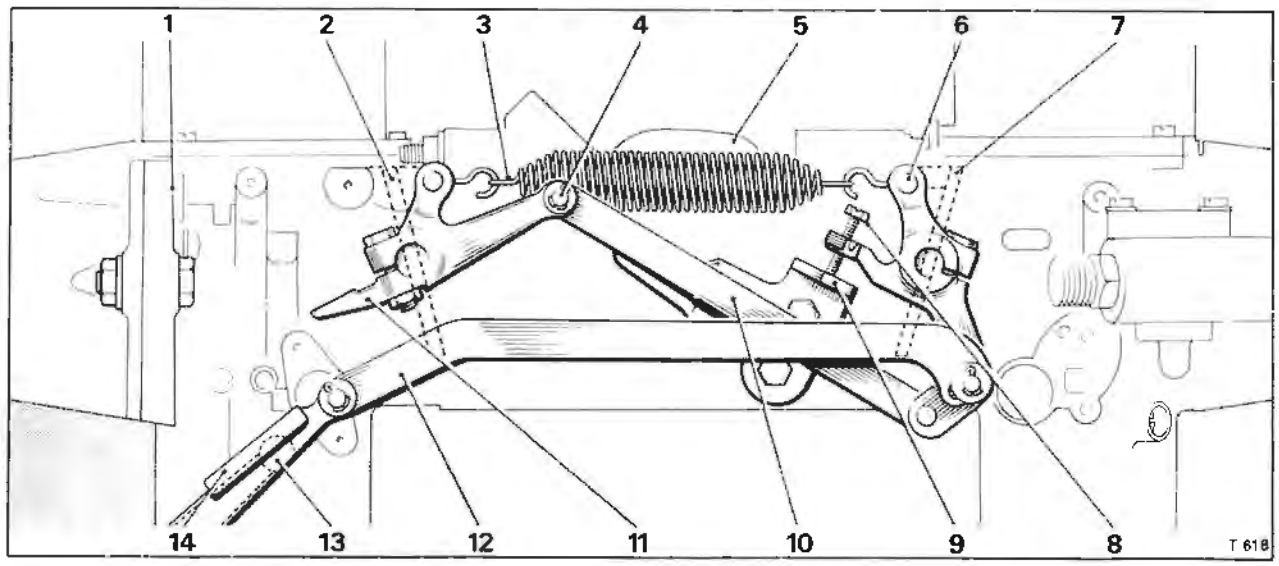

Fig. K97 Carburetter throttle linkage

1 'A' bank carburetter.
2 'A' bank carburetter throttle butterfly.
3 Throttle spring.
4 Eccentric throttle adjuster.
5 Carburetter 'tee' piece.
6 'B' bank carburetter throttle lever.
7 'B' bank carburetter throttle butterfly.
8 Idle stop screw.
9 Throttle cross link guide bracket.
10 Cross link.
11 'A' bank carburetter throttle lever.
12 Drive link.
13 Rear manifold shaft lever.
14 Front manifold shaft lever.

© Rolls-Royce Motors Limited 1978

December 1978

TSD 4200

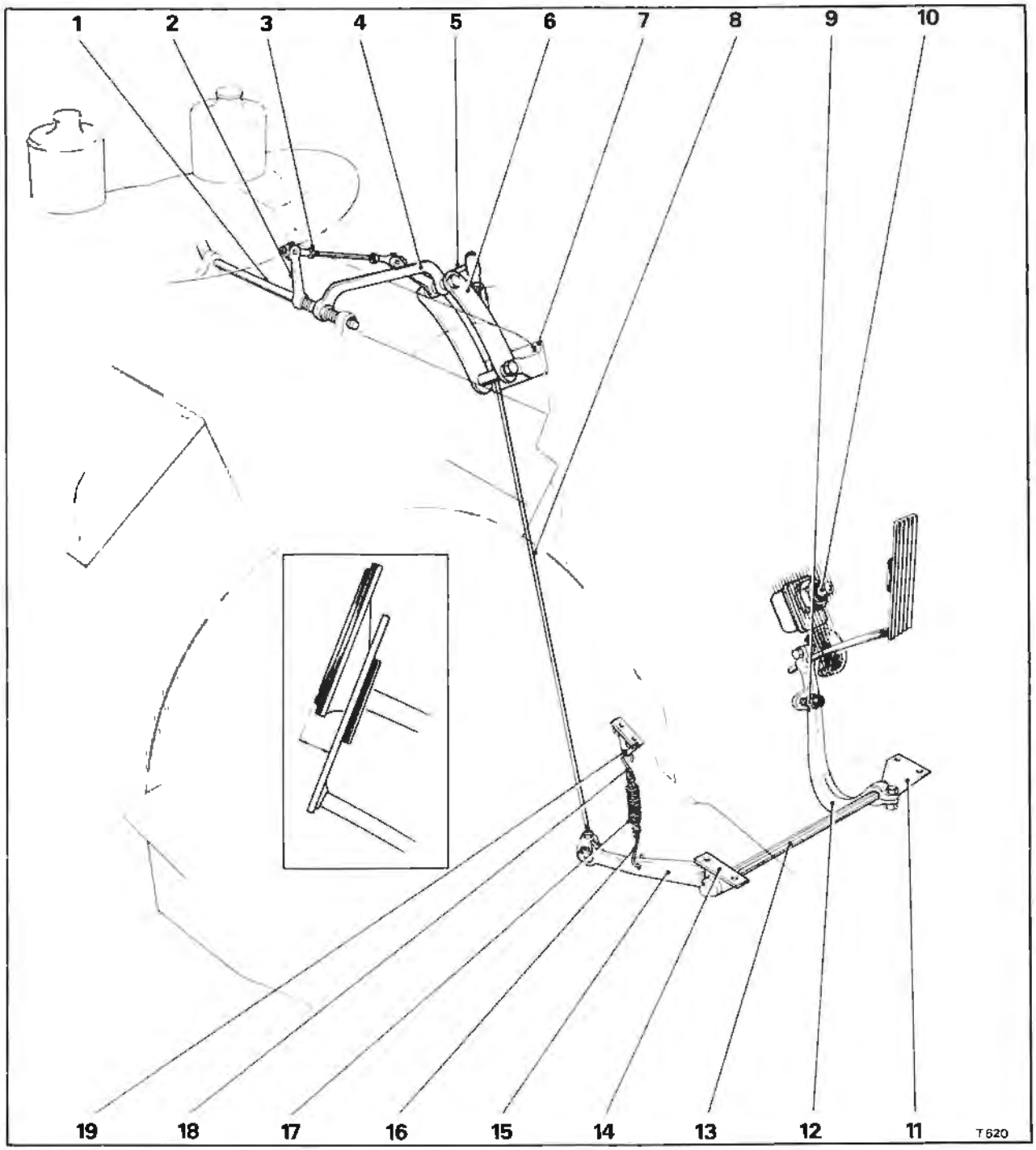

Fig. K98 S.U. carburetter accelerator pedal and isolator mechanism (right-hand drive cars)

1 'A' bank control shaft
2 Lever
3 Isolator rod
4 Tie-bar
5 Bell-crank lever
6 Isolator trapeze
7 Body longeron bracket
8 Long rod
9 Pedal off-stop screw
10 Kickdown micro-switch
11 Cross-shaft mounting bracket (R.H.)
12 Pedal lever
13 Cross-shaft
14 Cross-shaft mounting bracket (L.H.)
15 Control operating lever
16 Lower hook
17 Return spring
18 Top hook
19 Return spring mounting bracket

5. Fully close 'A' bank carburetter butterfly (item 2).
6. Tighten the pinch bolt securing 'A' bank throttle lever.
7. Fit the throttle spring (item 3) to the throttle levers.
8. Remove the setting jig from the throttle levers.
9. Fit the cross link guide bracket (item 9) to the carburetter 'tee' piece (item 5). Secure in position with two small screws. Lock the screws using two tab washers.
10. Fit the cross link (item 10) and the eccentric throttle adjuster (item 4) onto the throttle levers, ensuring that both throttle butterflies are closed when adjusting and tightening the eccentric adjuster.

Note
The eccentric pin should be set in the lowest position possible.

11. Ensure that the clearance between the cross link guide (item 9) and the cross link is between 1,27 mm. and 1,78 mm. (0.050 in. and 0.070 in.). If necessary bend the guide to obtain this clearance.
12. Check that the throttle linkage moves freely.
13. Fit the idle stop screw (item 8) and lock plate. Adjust until the screw just contacts the stop bracket (item 9) ensuring that the throttle butterflies are in the closed throttle position.
14. Screw down the idle stop screw half a turn.
15. Connect one end of the drive link (item 12) to the 'B' bank throttle lever and the opposite end to the manifold shaft lever (item 14).
16. Operate the linkage to ensure free movement.
17. With the throttles in the closed position check that the 'A' bank control shaft to control rod lever (item 13) on the rear of the manifold shaft lever is in line with the front manifold shaft lever (item 14). Tighten the securing bolts on both levers.
18. Operate the mechanism; check for freedom of movement within the linkage. Also ensure that there is clearance with the various engine components.

Accelerator pedal and isolator mechanism - To set
Right-hand drive cars (see Fig. K98)

1. Assemble the isolator rod (item 3) to give a distance of between 5,75 cm. and 5,84 cm. (2.265 in. and 2.300 in.) between the inner faces of the lock-nuts.
2. Set the accelerator pedal off-stop screw (item 9) to between 2,54 cm. and 2,61 cm. (1.0 in. and 1.03 in.).
3. Fit the right-hand mounting bracket (item 11) for the accelerator cross-shaft (item 13).
4. Insert the cross-shaft (item 13) through the longeron. Fit the accelerator pedal lever (item 12) and insert the cross-shaft into the bush in the right-hand bracket (item 11).
5. Mount the control operating lever (item 15) on the opposite end of the cross-shaft (item 13), but do not fit the pinch bolt.
6. Fit the left-hand mounting bracket (item 14) onto the cross-shaft (item 13). Screw the bracket to the underside of the body.
7. Tighten the pinch bolt of the accelerator pedal lever (item 12).
8. Adjust the cross-shaft end-float to between 0,127 mm. and 0,381 mm. (0.005 in. and 0.015 in.) bending the brackets if necessary.
9. Check that the cross-shaft rotates freely.
10. Fit the accelerator pedal return spring (item 17) using the hooks (items 16 and 18)
11. Slide the control operating lever (item 15) into its correct position. Fit the pinch bolt and tighten the nut.
12. Check that the brake pedal is set correctly (the accelerator pedal is set relative to the brake pedal). Ensure that there is a minimum clearance of 9,94 cm. (3.915 in.) between the underside of the brake pedal and the seal housing.

Note
Full instructions for setting the brake pedal are given in Chapter G - Hydraulic systems.

13. Connect the isolator trapeze (item 6) to the yoke of the body longeron bracket (item 7).
14. Check that the mechanism moves freely by pressing downwards on the free end of the isolator bell-crank (item 5).
15. Assemble the long rod (item 8) with a distance of approximately 47,17 cm. (18.575 in.) between the inner faces of the lock-nuts; leave the nuts loose.
16. Check that the accelerator pedal is positioned between 6,35 mm. and 12,7 mm. (0.250 in. and 0.500 in.) below the brake pedal. If not, reset the off-stop screw (item 9).
17. Fit the jaw of the long rod (item 8) to the control operating lever (item 15); offer up the opposite end to the bell-crank lever (item 5). Adjust the length of the rod until there is a minimum amount of 'free-play' in the control system.
18. Tighten the lock-nuts.
19. Check that the entire accelerator control system operates smoothly.
20. Check that full throttle and kickdown are available.
21. Set the height of the kickdown button (item 10). Ensure that 'pedal feel' is evident when kickdown occurs.
22. Check that when the accelerator pedal is released the throttles fully close.
23. With the engine at normal operating temperature but not running, repeat Operations 19 and 22.

Left-hand drive cars not fitted with an emission control system (see Fig. K99)

1. Assemble the isolator rod (item 3) to give a distance of between 5,75 cm. and 5,84 cm. (2.265 in. and 2.300 in.) between the inner faces of the lock-nuts.
2. Set the accelerator pedal off-stop screw (item 16) to between 2,66 cm. and 2,71 cm. (1.050 in. and 1.070 in.).

Printed in England
© Rolls-Royce Motors Limited 1978

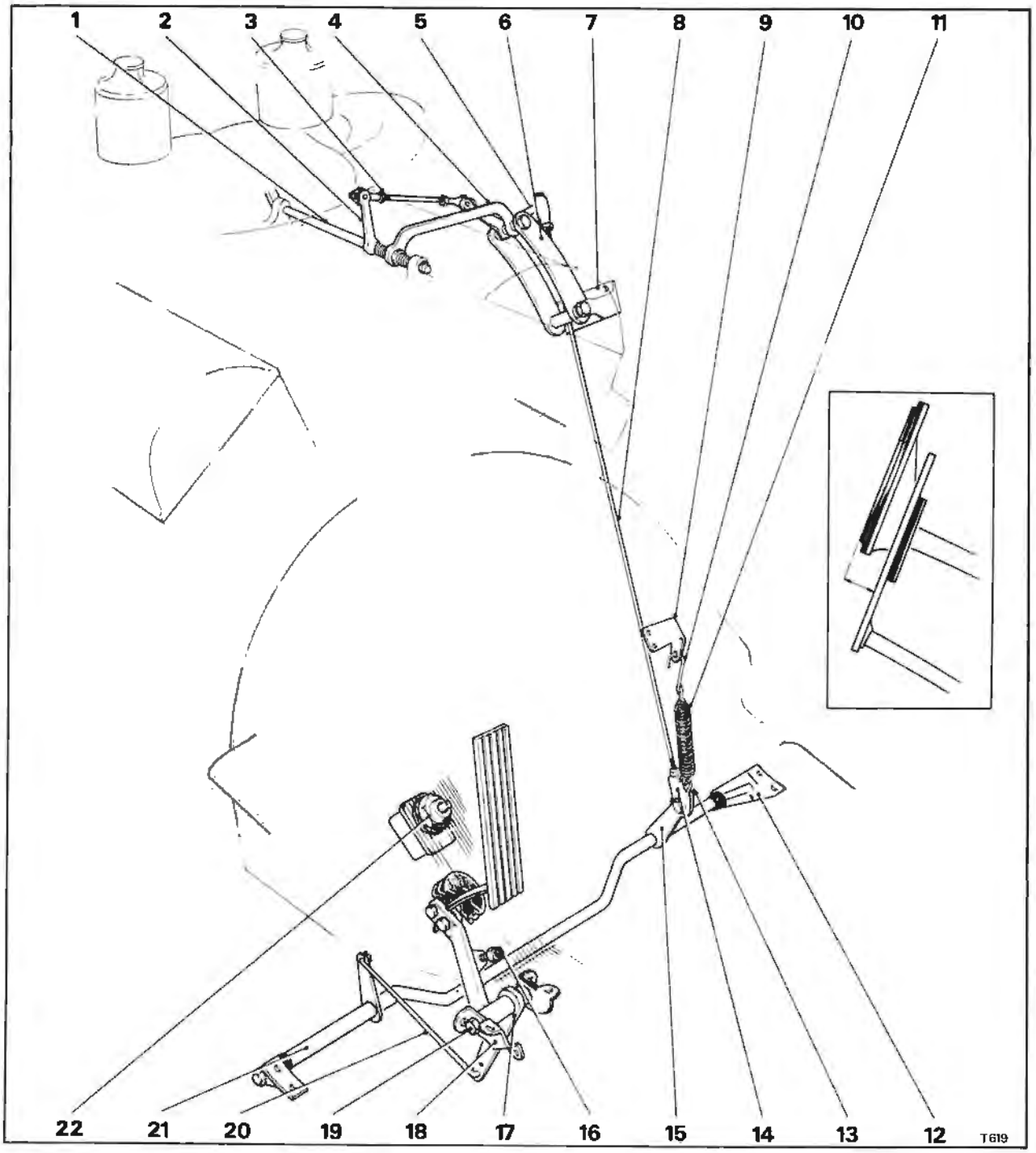

Fig. K99 S.U. carburetter accelerator pedal and isolator mechanism (left-hand drive cars)

1 'A' bank control shaft
2 Lever
3 Isolator rod
4 Tie-bar
5 Bell-crank lever
6 Isolator trapeze
7 Body longeron bracket
8 Long rod
9 Return spring mounting bracket
10 Top hook
11 Return spring
12 Cross-shaft mounting bracket
13 Lower hook
14 Jaw - long rod
15 Control operating lever
16 Pedal off-stop screw
17 Pedal lever
18 Pedal lever mounting bracket
19 Pivot pin
20 Connecting rod
21 Cross-shaft
22 Kickdown micro-switch

3. Build a sub-assembly of the accelerator pedal lever (item 17), its pivot pin (item 19) and mounting brackets (item 18). Check that the lever moves freely between the brackets.
4. Fit the accelerator pedal assembly to the body. Check that the lever moves freely.
5. Fit the accelerator cross-shaft (item 21), screwing the cross-shaft mounting brackets (item 12) to the longeron.
6. Carry out Operations 8 to 10 inclusive and 12 to 23 inclusive, as described for right-hand drive cars.

Left-hand drive cars fitted with an emission control system (see Fig. K99)

1. Assemble the isolator rod (item 3) to give a distance of between 10,66 cm. and 10,79 cm. (4.204 in. and 4.250 in.) between the inner faces of the lock-nuts.
2. Set the accelerator pedal off-stop screw (item 16) to between 3,27 cm. and 3,32 cm. (1.290 in. and 1.310 in.).
3. Assemble the accelerator pedal lever (item 17), pivot pin (item 19) and the mounting brackets (item 18). Check that the lever moves freely between the brackets.
4. Fit the accelerator pedal assembly to the body. Check that the lever moves freely.
5. Fit the accelerator cross-shaft (item 21) and screw the cross-shaft mounting brackets (item 12) to the longerons.
6. Adjust the end-float of the cross-shaft to between 0,127 mm. and 0,381 mm. (0.005 in. and 0.015 in.), bending the brackets (item 12) if necessary.
7. Check that the cross-shaft (item 21) rotates freely.
8. Using the rod (item 20) connect the pedal lever (item 17) to the cross-shaft (item 21). Lock the rod with split pins and check that the rod moves freely.
9. Fit the accelerator pedal to the lever (item 17).
10. Fit the pedal return spring (item 11) using the hooks (items 10 and 13).
11. Check that the brake pedal is set correctly (the accelerator pedal is set relative to the brake pedal). Ensure that there is a minimum clearance of 9,94 cm. (3.915 in.) between the seal housing and the underside of the brake pedal.

Note

Full instructions for setting the brake pedal are given in Chapter G - Hydraulic systems.

12. Connect the isolator trapeze (item 6) to the yoke of the body longeron bracket (item 7).
13. Check that the mechanism moves freely by pressing downwards on the free end of the isolator bell-crank (item 5).
14. Assemble the long rod (item 8) with approximately 46,67 cm. (18.380 in.) between the inner faces of the lock-nuts; leave the nuts loose.
15. Check that the accelerator pedal is positioned between 15,87 mm. and 20,32 mm. (0.625 in. and 0.800 in.) below the brake pedal. If not, reset the off-stop screw (item 16).
16. Fit the jaw (item 14) of the long rod (item 8) to the control operating lever (item 15) and offer up the opposite end to the bell crank lever (item 5). Adjust the length of the rod until there is a minimum amount of free-play in the control system.
17. Tighten the lock-nuts.
18. Check that the entire accelerator control system operates smoothly.
19. Check that full throttle and kickdown are available.
20. Set the height of the kickdown button (item 22). Ensure that the 'feel' it provides is evident when kickdown occurs.
21. Check that the throttles close fully when the accelerator pedal is released.
22. With the engine at normal operating temperature, but not running, repeat Operation 18 and 21.

Solex 4A1 carburetter

Carburetter throttle linkage, accelerator pedal and isolator mechanism - To set. Right-hand drive cars (see Figs. K100 and K98)

1. Assemble and fit the carburetter to bell-crank rod (see Fig. K100, item 2). Ensure that a distance of 9,48 cm. to 9,56 cm. (3.735 in. to 3.765 in.) exists between the inner faces of the lock-nuts.

Note

No rubber protective boot is fitted to the carburetter end balljoint connection.

2. Assemble and fit the isolator mechanism rod (item 4).Ensure that a distance of 27,90 cm. to 27,98 cm. (10.985 in. to 11.015 in.) exists between the inner faces of the lock-nuts.
3. Fit the right-hand accelerator cross-shaft mounting bracket (see Fig. K98, item 11).
4. Set the accelerator pedal off-stop screw (item 9) to between 3,05 cm. and 3,11 cm. (1.20 in. and 1.225 in.).
5. Insert the cross-shaft (item 13) through the longeron. Fit the accelerator pedal lever (item 12) and insert the cross-shaft into the bush in the right-hand bracket (item 11).
6. Mount the control operating lever (item 15) onto the opposite end of the cross-shaft; but do not fit the pinch bolt.
7. Fit the left-hand mounting bracket (item 14) onto the cross-shaft. Screw the bracket to the underside of the body.
8. Tighten the pinch bolt of the accelerator pedal lever.
9. Adjust the cross-shaft end-float to between 0,127 mm. and 0,381 mm. (0.005 in. and 0.015 in.) by bending the brackets if necessary.
10. Check that the cross-shaft rotates freely.
11. Fit the accelerator pedal return spring (item 17)

Printed in England
© Rolls-Royce Motors Limited 1978
December 1978
TSD 4200

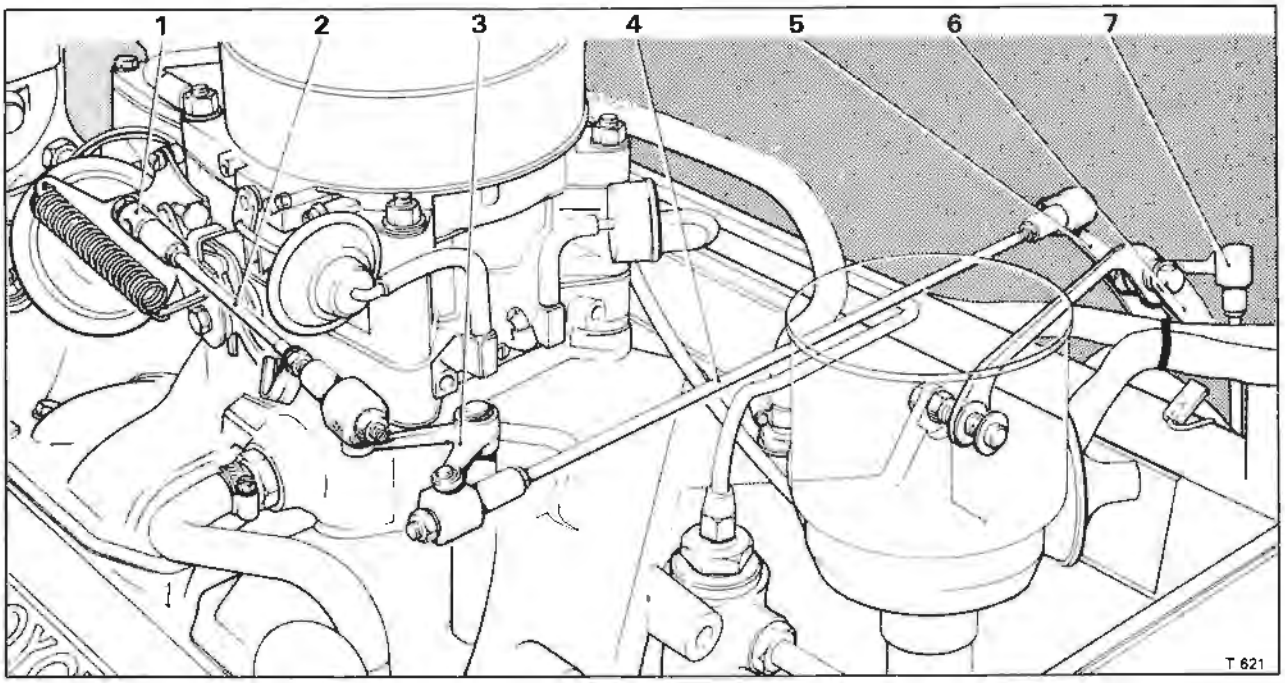

Fig. K100 Solex carburetter throttle linkage

1 Carburetter end ball joint connection
2 Carburetter to bell-crank rod
3 Bell-crank lever
4 Isolator rod
5 Isolator bell-crank lever
6 Isolator trapeze
7 Long rod

using the hooks (item 16 and 18).

12. Slide the control opperating lever into its correct position. Fit the pinch bolt and tighten the nut.

13. Check that the brake pedal is set correctly (the accelerator pedal is set relative to the brake pedal). Ensure that there is a minimum clearance of 9,94 cm. (3.915 in.) between the underside of the brake pedal and the seal housing.

Note
Full instructions for setting the brake pedal are given in Chapter G - Hydraulic systems.

14. Connect the isolator trapeze to the yoke of the body longeron bracket.

15. Check that the mechanism moves freely; by pressing downwards on the free end of the isolator bell crank lever.

16. Assemble the long rod (item 8). Ensure that a distance of 45,72 cm. to 45,78 cm. (18.00 in. to 18.025 in.) exists between the inner faces of the lock-nuts.

17. Check that the accelerator pedal is positioned between 6,35 mm. and 12,7 mm. (0.250 in. and 0.500 in.) below the brake pedal.

18. Fit the jaw of the long rod to the control operating lever (item 15) and offer up the opposite end to the bell-crank lever (item 5).

19. Check that the accelerator control system operates smoothly.

Note
When the choke flap is closed the secondary throttles are prevented from opening. This results in an extra load in the pedal feel at the point where the secondary throttles are normally opened.

20. Check that full throttle and kickdown are available. If not adjust the long rod (item 8).

21. With the engine at normal operating temperature, but not running, repeat Operation 19. Then, with the engine running check that the throttles close fully when the accelerator pedal is released.

Note
The engine must be running so that the manifold vacuum is applied to the throttle jack. Without manifold vacuum, the throttle jack will hold the throttles slightly open. If the throttles do not close fully, adjust the long rod (item 8). After any adjustment repeat Operation 20.

Left-hand drive cars (see Figs. K100 and K99)

1. Carry out Operations 1, 2 and 4 as described for right-hand drive cars.

2. Build a sub-assembly of the accelerator pedal lever (item 17), pivot pin (item 19) and mounting brackets. Check that the lever moves freely between the brackets.

3. Fit the accelerator pedal assembly to the body. Check that the lever moves freely.

4. Fit the accelerator cross-shaft (item 21) by screwing the mounting brackets (item 12), to the longerons.
5. Carry out Operation 9 and 10 as described for right-hand drive cars.
6. Using the connecting rod (item 20) attach the pedal lever to the cross-shaft. Lock the rod with split pins and check that the rod moves freely.
7. Fit the accelerator pedal to the lever (item 17).
8. Fit the pedal return spring (item 11) using the hooks (items 10 and 13).
9. Carry out Operations 13 and 21 inclusive as described for right-hand drive cars.

Kickdown micro-switch

This micro-switch is situated on the underside of the car body below the accelerator pedal, its purpose is to provide kickdown (detent) for the torque converter transmission.

Kickdown micro-switch assembly - To remove
1. Drive the car onto a ramp and raise to a suitable working height.
2. From inside the car, locate the micro-switch operating plunger beneath the accelerator pedal.
3. Unscrew the large retaining nut and withdraw the washer.
4. From under the car detach the 'Lucar' connections and withdraw the micro-switch assembly.

Kickdown micro-switch - To dismantle
The assembly comprises the micro-switch, plunger and casing, the assembly should be removed from the car before any dismantling is commenced.
1. Using a screwdriver carefully 'ease back' the indentations which crimp around the cover of the assembly.
2. Remove the cover.
3. Disconnect the two electrical cables from the micro-switch. The white/green cable has a 'Lucar' connection and the white cable is retained by a small cheesehead screw.
4. Unscrew the two 6B.A. nuts securing the micro-switch to its mounting bracket. Withdraw the cheesehead screws and collect the two washers from each screw. Withdraw the micro-switch.
5. Unscrew the two cheesehead screws retaining the micro-switch mounting bracket. Withdraw the bracket.
6. Remove the circlip from around the plunger assembly.
7. Withdraw the plunger assembly and spring.

Kickdown micro-switch - To assemble
Assemble the micro-switch and plunger by reversing the procedure given for dismantling, noting the following points.
1. Ensure that the rubber seal is in a good condition and fitted securely to the body of the assembly. The seal is secured using Dunlop Adhesive S1240 or equivalent.

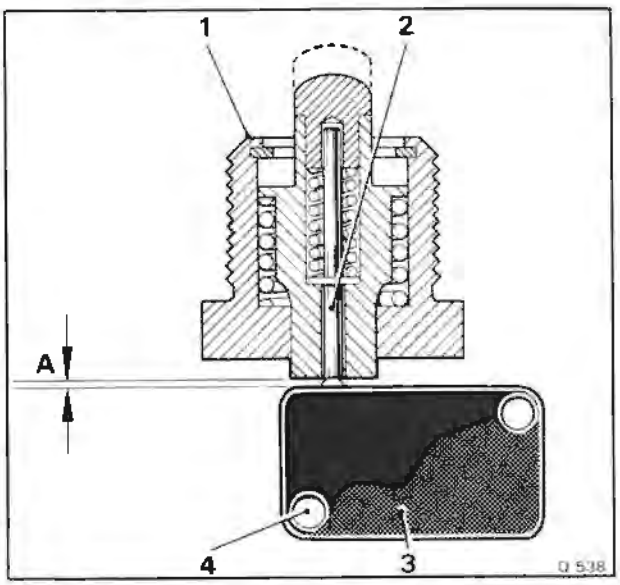

Fig. K101 Kickdown micro-switch assembly
1 Plunger assembly
2 Secondary plunger
3 Micro-switch
4 Elongated hole in mounting plate (micro-switch adjustment)
A Clearance of 0,127 mm. (0.005 in.)

Kickdown micro-switch - To set
1. Ensure that the carburetter linkage and the accelerator pedal linkage are correctly set. Swing the micro-switch towards the base of the plunger until a 0,254 mm. to 0,762 mm. (0.010 in. to 0.030 in.) gap exists between the micro-switch button and the plunger.
2. Tighten the micro-switch securing nuts and afterwards, check that the gap set in Operation 1 has not been disturbed.
3. Slowly depress the plunger to obtain full stroke. Check that the switch operates (audible click) during this operation.
4. Ensure that with the main plunger fully depressed it is still clear of the micro-switch case (see Fig. K101).
5. Slowly release the plunger ensuring that the micro-switch contacts open (audible click).
6. Ensure that the clearance set between the plunger and the micro-switch button, remains as set in Operation 1.

Printed in England
© Rolls-Royce Motors Limited 1980

Section K8

Fault diagnosis

Printed in England

© Rolls-Royce Motors Limited 1978

Symptoms	Possible cause
Fuel pumps - Pierburg	
1. Engine will not start due to no fuel being delivered at the carburetters or engine cuts out due to fuel starvation.	
(i) Quiet buzzing or light whine (i.e. pump operating but not delivering fuel).	(i) (a) Electrical connections reversed. (b) Pump not priming due to air lock, caused by insufficient fuel in tank. (c) With the pump inhibit system overriden, if the pump motor can be heard or felt to be running, then either: (i) The pump has seized and broken the magnetic drive coupling, or (ii) The internal pressure relief valve has failed.
(ii) No buzzing (i.e. pump inoperative).	(ii) (a) Faulty leads or terminal connections. (b) Faulty electrical feed to pump. (c) Blocked filter in the pump.
(iii) Loud buzzing (i.e. pump operating but not delivering fuel).	(iii) (a) Inlet and outlet filter adapters (⅜ in. **In**, 5/16 in. **Out**) reversed (b) Blockage in pipes, etc. (c) Pump inlet and outlet pipes reversed (d) Feed and return pipes at the carburetters reversed (5/16 in. Feed, ⅜ in. Return). (e) Non-return valve the incorrect way around.
Fuel pumps - S.U.	
1. Fuel pumps fail to operate.	1. (a) Faulty fuel pumps. (b) Faulty or obstructed float chamber needle valves. (c) Blocked carburetter filters. (d) Faulty electrical circuit. (e) Dirty or incorrectly set contact points. (f) Obstruction in the pipe between fuel tank and pump. (g) If all the preceding points fail to locate the fault, stiffening of the diaphragm or abnormal friction in the rocker 'toggle over' mechanism should be suspected.
2. Reduced fuel flow with rapid operation of the fuel pump.	2. Air leak on the suction side of the pump.
3. Fuel pump operates without fuel delivery.	3. (a) Serious air leak on the suction side of the pump. (b) Dirt lodged under one of the valves; particularly the inlet valve.

Symptoms	Possible cause
4. Noisy pump operation.	4. Air leak in suction line.
5. Fuel flow initially correct, then reducing rapidly resulting in slow pump operation.	5. (a) Insufficient fuel tank ventilation (Inadequate ventilation of the fuel tank causes a slow power stroke with resultant excessive burning of the contact points). (b) Restriction on the suction side of the pump.

Carburetters - S.U. H1F7

For information relating to cars destined for Australia, Canada, Japan and U.S.A. refer to the appropriate section of Chapter U.

1. Engine will not start. (Starter motor operating).	1. (a) Ignition circuit broken. (b) Failed anti 'run-on' solenoid or failure of electrical supply circuit. (c) Ignition system faulty. (d) Damaged or contaminated ignition high tension circuit. (e) Blocked fuel feed line, fouled float chamber filters. (f) Faulty choke bi-metal coil. (g) Choke solenoid inoperative. (h) Faulty choke fast-idle mechanism. (i) Air leak into induction system. (j) Faulty hot idle mixture compensator. (k) Weakening device filter blocked, weakening device air intake non-return valve failed or blockage in rubber connecting hoses. (l) Faulty weakening device cut-off solenoid or failure of electrical supply circuit. (m) Faulty weakening device control switch or failure of electrical supply circuit. (n) Dislodged venturi in weakening device. (o) Flooding of carburetter float chamber or jet.
2. Engine idles very roughly.	2. (a) Ignition system faulty. (b) Fouled sparking plugs. (c) Damaged or contaminated ignition high tension circuit. (d) Air leak into induction system. (e) Faulty hot idle compensator. (f) Weakening device filter blocked, weakening device air intake non-return valve failed or blockage in rubber connecting hoses. (g) Badly worn or damaged carburetter control linkage. (h) Flooding of carburetter float chamber or jet. (i) Sticking carburetter piston. (j) Incorrect operation of carburetter jet compensation. (k) Fouled carburetter float chamber or jet. (l) Incorrect operation of temperature controlled air intake system.

Symptoms	Possible cause
3. Engine stalls.	3. (a) Ignition circuit broken. (b) Failed anti 'run-on' solenoid or failure of electrical supply circuit. (c) Ignition system faulty. (d) Damaged or contaminated ignition high tension circuit. (e) Blocked fuel feed line, fouled float chamber filters. (f) Air leak into induction system. (g) Faulty hot idle mixture compensator. (h) Weakening device filter blocked, weakening device air intake non-return valve failed or blockage in rubber connecting hoses. (i) Badly worn or damaged carburetter control linkage. (j) Flooding of carburetter float chamber or jet. (k) Sticking carburetter piston. (l) Incorrect operation of carburetter jet compensation. (m) Fouled carburetter float chamber or jet.
4. (i) Engine shows signs of power loss evident at high speeds and loading. (ii) Engine misfires particularly on hard acceleration from low speed.	4. (a) Ignition system faulty. (b) Fouled sparking plugs. (c) Damaged or contaminated ignition high tension circuit. (d) Blocked fuel feed line or fouled float chamber filters. (e) Choke system operation incorrect. (f) Sticking carburetter piston. (g) Fouled carburetter float chamber or jet.
5. Engine hesitates or misfires under light load.	5. (a) Failed anti 'run-on' solenoid or failure of electrical supply circuit. (b) Ignition system faulty. (c) Fouled sparking plugs. (d) Damaged or contaminated ignition high tension circuit. (e) Blocked fuel feed line or fouled float chamber filters. (f) Air leak into induction system. (g) Faulty hot idle mixture compensator. (h) Weakening device filter blocked, weakening device air intake non-return valve failed or blockage in rubber connecting hoses. (i) Dislodged venturi in weakening device. (j) Flooding of carburetter float chamber or jet. (k) Incorrect operation of carburetter jet compensation. (l) Fouled carburetter float chamber or jet. (m) Incorrect operation of temperature controlled air intake system.

Printed in England

© Rolls-Royce Motors Limited 1978

Symptoms	Possible cause
6. Increase in fuel consumption.	6. (a) Ignition system faulty. (b) Faulty choke bi-metal coil. (c) Choke system operation incorrect. (d) Air leak into induction system. (e) Faulty hot idle mixture compensator. (f) Weakening device filter blocked, weakening device air intake non-return valve failed or blockage in rubber connecting hoses. (g) Faulty weakening device cut-off solenoid or failure of electrical supply circuit. (h) Faulty weakening device control switch or failure of electrical supply circuit. (i) Air leak in mixture weakening system. (j) Flooding of carburetter float chamber or jet. (k) Sticking carburetter piston. (l) Incorrect operation of carburetter jet compensation. (m) Incorrect purge flow rate.
7. Engine 'backfires' on overrun.	7. (a) Ignition system faulty. (b) Air leak into induction system. (c) Faulty hot idle mixture compensator.
8. Sudden increase in engine idle speed.	8. (a) Faulty choke fast-idle mechanism. (b) Failed carburetter overrun valve.

Carburetters - Solex 4A1

1. Unsatisfactory cold start.	1. (a) Throttle valve incorrectly set. (b) Choke strangler flap not closing. (c) Blockage of primary stage discharge tube or primary stage riser discharge tube.
2. Engine stops upon cold start.	2. (a) Fuel mixture too rich or too lean.
3. Engine stops when engaging gear (engine cold)	3. (a) Fast-idle speed too low. (b) Incorrectly set choke gap.
4. Engine stops during warm-up period.	4. (a) Fast-idle speed too low. (b) Choke bi-metal cover inadequately preloaded. (c) Vacuum operated throttle stop incorrectly set.
5. Unsatisfactory idling speed.	5. (a) Idling jets blocked. (b) Faulty anti 'run-on' solenoid valve(s). (c) Incorrectly set idle CO.
6. Increased idling speed.	6. (a) Choke strangler flap not opening completely. (b) Incorrectly set idle CO. (c) Throttle valve lever does not return to idling speed stop. (d) Vacuum operated throttle stop set to high or leak in the vacuum signal hose.
7. Flats spots or poor acceleration (primary stage).	7. (a) Insufficient or no fuel injection from acceleration pumps.

Symptoms	Possible cause
8. Flat spots or poor acceleration (secondary stage).	**8.** (a) Loss of secondary stage air flaps spring tension. (b) Leak on air flaps vacuum damping. (c) Secondary stage air flaps binding. (d) Secondary stage riser passages blocked.
9. High fuel consumption.	**9.** (a) Choke not opening completely. (b) Incorrectly set idle CO. (c) Secondary stage air flaps binding. (d) Secondary stage throttle butterflies binding.
10. Engine hunting.	**10.** (a) Vacuum operated throttle stop incorrectly set. (b) Incorrectly set idle CO.
11. Hesitation when opening the secondary stage throttles (short duration).	**11.** (a) Loss of secondary stage throttle butterflies return spring tension due to relaxation of the spring.
12. Severe loss of power when the secondary stage throttles are opened (long duration).	**12.** (a) Loss of secondary air flaps return spring tension due to breakage of the spring or loss of spring tension due to the locking screw becoming loose.
13. Very poor idle quality accompanied by the emission of black smoke from the tailpipe; possibly corrected if the engine is switched off and then restarted.	**13.** (a) Failure of the secondary stage throttles to close properly due to loss of tension of the return spring.

Printed in England

© Rolls-Royce Motors Limited 1978

Section K9

Workshop tools

Tool Number	Description
RH 8090	Pliers - wire hose clips
RH 8725	Flowmeter (rotameter type)
RH 8841	Dial gauge - carburetter piston lift
RH 8880	Setting jig - throttle levers
RH 8945	Connector - choke stove pipe
RH 9086	Fitting tool - carburetter piston ball race clip
RH 9096	Fitting tool - 'A' bank mixture adjusting screw tamperproof seal
RH 9097	Fitting tool - 'B' bank mixture adjusting screw tamperproof seal
RH 9105	Kit - to adapt RH 8841 to fit S.U. HIF7 carburetters

Printed in England

© Rolls-Royce Motors Limited 1978

December 1978

TSD 4200

Chapter L

Cooling system

Section

L1 General information
L2 Radiator
L3 Thermostat
L4 Coolant pump
L5 Dimensional Data
L6 Workshop Tools

Printed in England

© Rolls-Royce Motors Limited 1977

September 1977

T.S.D. 4200

S812

Printed in England

© Rolls-Royce Motors Limited 1985

T.S.D. 4200

Chapter L

Issue record sheet 1

May 1985

The dates quoted below refer to the issue date of individual pages within this chapter.

Section	L1	L2	L3	L4	L5	L6
Page No.						
1	**May 85**	Sept 77	Sept 77	Nov 77	Sept 77	Sept 77
2	**May 85**	Sept 77	Sept 77	Nov 77		
3	Sept 77			Sept 77		
4	**May 85**					
5						
6						
7						
8						
9						
10						
11						
12						
13						
14						
15						
16						
17						
18						
19						
20						
21						
22						
23						
24						
25						
26						
27						
28						
29						
30						
31						
32						
33						
34						
35						
36						
37						
38						
39						
40						
41						
42						
43						
44						
45						
46						
47						
48						

Section L1

General information

Introduction

The cooling system must be filled with a 50% mixture of 'Prestone Anti-freeze and Summer Coolant' UT 184 and water. The coolant mixture should be renewed annually.

A thermostat valve is fitted in the coolant outlet pipe between the engine and radiator header tank. This valve prevents circulation of the coolant through the radiator until the engine has reached normal operating temperature.

On all cars other than the Camargue, coolant temperature is detected by a transmitter mounted on the thermostat housing and recorded on the 'four in one' gauge mounted on the facia when the ignition is switched on. A coolant level probe situated in the header tank illuminates a warning panel on the facia when the coolant drops below the required level.

Three drainage points are provided in the system. A tap at the bottom of the radiator (see Fig. L1) and a drain plug on each side of the cylinder block (see Fig. L2).

Important

The cooling system is pressurized. **Do not** remove the radiator filler cap while the engine is running or when the engine is hot, otherwise internal pressure will blow out the hot coolant. If it is necessary to check the level of the coolant when the engine is hot, muffle the filler cap with a thick cloth. Gradually turn the cap anti-clockwise until the pressure is reduced, then remove the cap.

Corrosion and freeze protection

For protection against frost and corrosion, the cooling system must be filled with a solution of 50% prescribed anti-freeze and 50% water.

The mixture should be renewed annually.

The trade names of the anti-freezes that may be used are UT184 (BP – Hythe Chemicals) or Prestone II. The former is used predominantly in Europe and the latter in North America. Both are summer coolant/anti-freeze solutions and are miscible, but **must not** be mixed with any other brand of anti-freeze.

As a visual aid to identifying the two types of anti-freeze 'Prestone Anti-freeze and Summer Coolant' UT 184 is coloured turquoise blue and 'Prestone II Winter/Summer Concentrate' is coloured fluorescent green.

Cooling system - To drain

1. Drive the car onto a ramp.

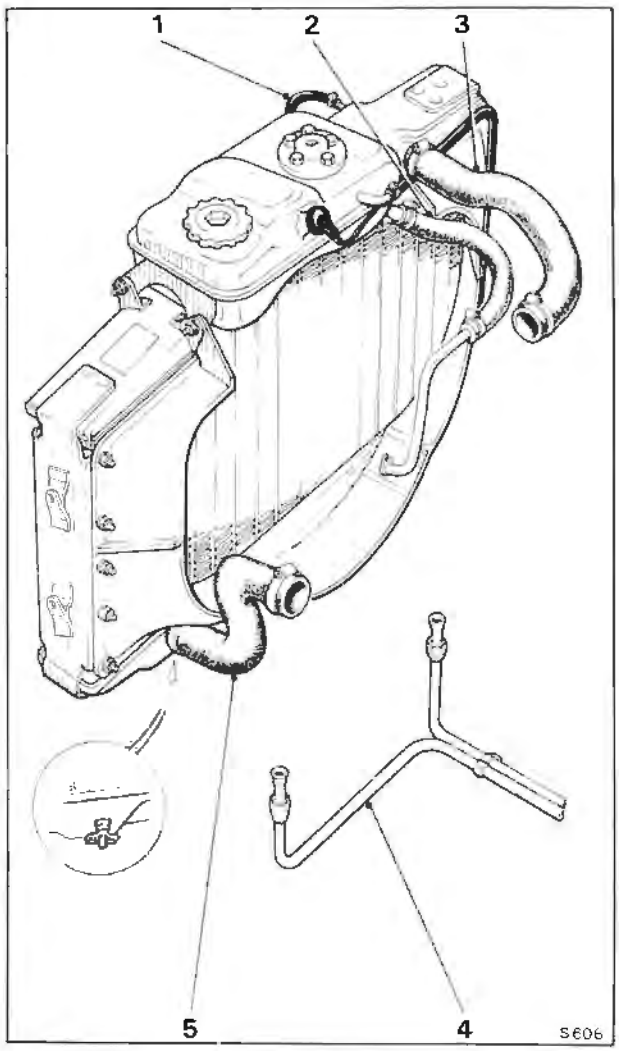

Fig. L1 Radiator and connecting pipework
1 Header tank to radiator
2 Pump to header tank
3 Radiator to thermostat
4 Gearbox oil cooler pipe
5 Radiator to pump

2. Firmly apply the parking brake and remove the gear range selector thermal cut-out from the fuseboard. Disconnect the oil pressure switch situated behind the fan on the 'B' bank side of the engine to allow the use of the air conditioning system to operate without starting the engine.
3. Switch on the ignition and rotate the air conditioning system function switch to the DEF (defrost) position.

Printed in England
© Rolls-Royce Motors Limited 1985
May 1985
T.S.D. 4200

Ensure that the fan motors are operating at maximum speed.

Wait approximately 20 seconds for the lower servo to reach the full hot position and observe that all the air is diverted to the windscreen.

This procedure opens the heater water tap ensuring the water system can be completely drained.

4. Switch off the ignition and carefully remove the radiator filler cap.

5. Raise the car to a convenient working height.

6. Place containers under the car to collect the coolant. Attach a length of rubber hose from the radiator drain tap to direct the coolant into the containers.

7. Open the radiator drain tap and drain the coolant from the radiator. When completed, remove the drain plugs to drain the residue from the crankcase.

Cooling system - To flush

1. Drain the cooling system as described previously under the heading, Cooling system - To drain.

2. Lower the ramp. Remove the inlet and outlet coolant hoses.

3. Fit a waste pipe to the upper (inlet) connection of the radiator.

4. Apply mains water under pressure through the lower (outlet) connection of the radiator. This should remove all loose sediment in approximately 30 minutes.

Do not under any circumstances use a strong alkaline compound or detergent to clean the cooling system. Such compounds have a detrimental chemical action on aluminium alloys.

5. Examine all rubber coolant hoses and renew any which show signs of deterioration.

Engine

1. Remove the outlet hose and drain plugs from each cylinder bank.

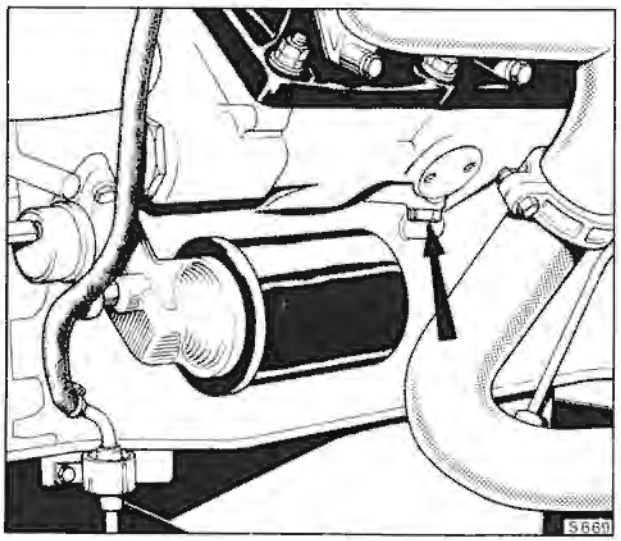

Fig. L2 Cylinder block coolant drain plug

2. Remove the thermostat cover, withdraw the thermostat and replace the cover.

3. Fit a suitable pipe to the drain plug aperture and apply mains water pressure to each aperture in turn.

Flush for approximately 30 minutes, or until the water runs clear.

4. Fit the drain plugs, thermostat and thermostat cover using a new gasket.

If the engine is being flushed as part of the two year schedule maintenance, the thermostat should be discarded and a new one fitted.

5. Examine all rubber coolant hoses and renew any which show signs of deterioration.

Heater matrix

1. To flush the heater system, detach the matrix hose at the electrically operated water tap and disconnect the return hose at the coolant pump.

2. Fit a waste pipe to the inlet connection of the heater matrix.

3. Flush the matrix for approximately 30 minutes.

4. Examine the cylinder head to heater tap hose and matrix inlet hose for deterioration. Renew if necessary.

Removal and fitting of heater and matrix

Refer to Chapter C - Air Conditioning System

Cooling system - To fill

1. Check that the air conditioning system function switch is in the DEF (defrost) position.

2. Ensure all hose connections and drain plugs are fitted and secure. Check that the radiator drain tap is closed.

3. Using the correct anti-freeze/water mixture, fill the system by pouring slowly to avoid the possibility of air locks.

4. Reconnect the oil pressure switch.

5. Start the engine and allow time for the system to reach normal operating temperature ensuring uniform distribution of the coolant.

6. Stop the engine and check the coolant level. Top-up if necessary. The correct level is when the coolant reaches the rubber seal in the filler neck.

7. Fit the radiator filler cap.

8. Check the tightness of all hose clips.

9. Examine all disturbed hoses and joints for leaks.

Coolant - To check

In the majority of cases hydrometers, used for checking anti-freeze concentrations, are inaccurate above a 40% figure.

As the acceptable range of concentration is between 45% and 55%, a refractometer, similar to the 'AO Duo-check' instrument, is more suitable for measuring a 50% solution.

The graph (see Fig. L3) shows the degrees of frost protection converted to a percentage concentration. Should the system be less than the acceptable limit, the graph indicates the necessary amount of coolant to be drained from a full system before replacing with 100% anti-freeze.

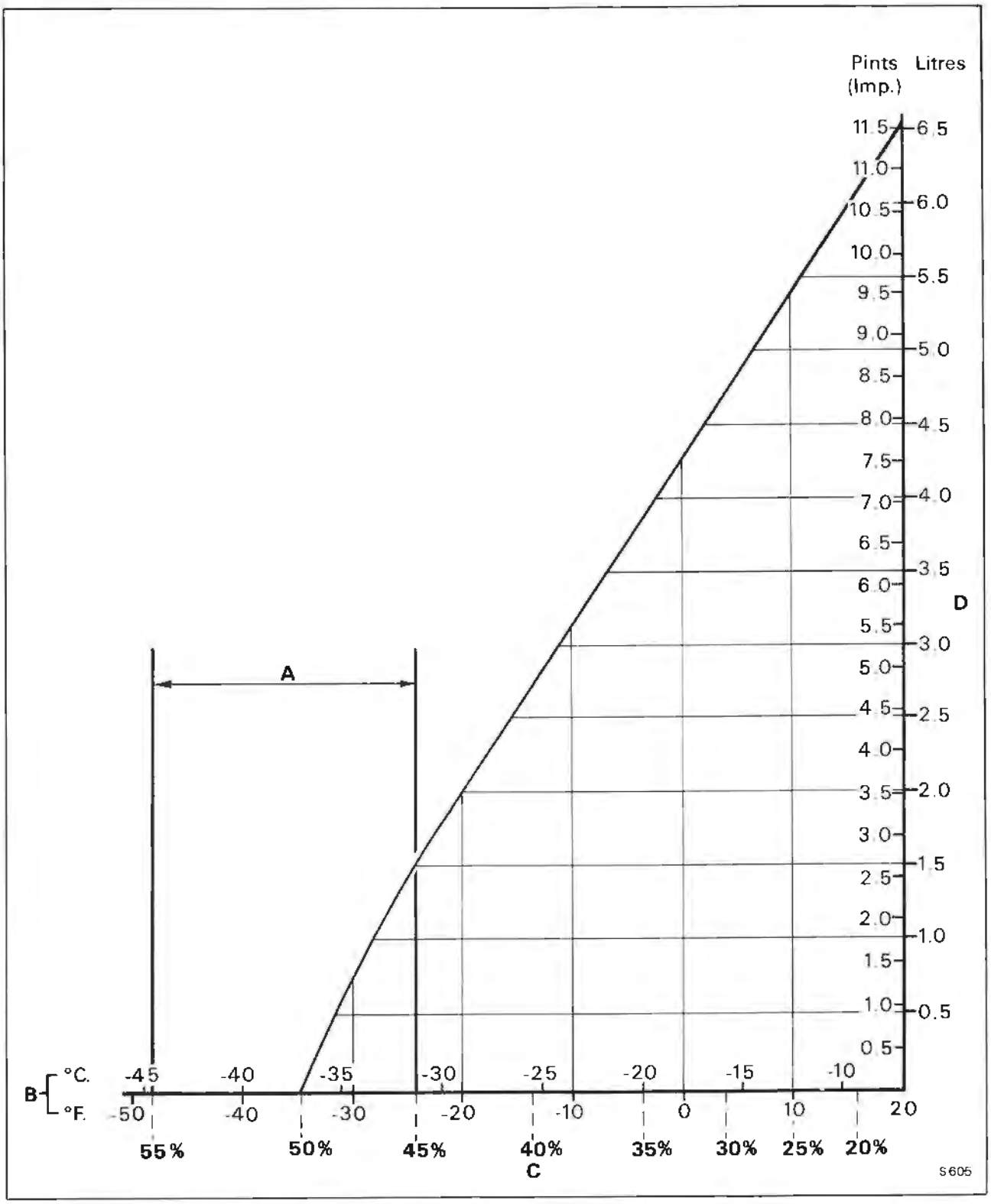

Fig. L3 Anti- freeze concentration correction chart to give a 50% solution

A Acceptable service range of concentration.
B Freezing point of coolant.
C Percentage concentration
D Volume of 100% anti-freeze to be added to maintain a 50% solution after removal of the same volume of old coolant first.

Printed in England
© Rolls-Royce Motors Limited 1977

1. After pouring into the system the correct amount of 100% anti-freeze, replace the filler cap, then run the engine on fast idle for approximately five minutes to enable a complete mix with the existing solution. Failure to circulate the new anti-freeze will result in an incorrect reading.
2. Remove the filler cap and check that the solution now measures within the range shown on the graph (see Fig. L3). Rectify if necessary.

Section L2

Radiator

Radiator - To remove

1. Drive the car onto a ramp.
2. Firmly apply the parking brake and remove the gear range selector thermal cut-out from the fuseboard. Disconnect the oil pressure switch situated behind the fan on the 'B' bank side of the engine. This enables the air conditioning system to operate without starting the engine.
3. Switch on the ignition and rotate the air conditioning system function switch to the DEF (defrost) position.

Ensure that the fan motors are operating at maximum speed.

Wait approximately 20 seconds for the lower servo to reach the full hot position and observe that all the air is diverted to the windscreen.

This procedure opens the heater water tap ensuring the water system can be completely drained.

4. Switch off the ignition and carefully remove the radiator filler cap.
5. Raise the car to a convenient working height.
6. Place containers under the car to collect the coolant. Attach a length of rubber hose from the radiator drain tap to direct the coolant into the containers.
7. Open the radiator drain tap and drain the coolant from the radiator. Close the drain tap, cover the containers to prevent contamination of the fluid, then lower the car.
8. Slacken the worm drive clips and remove the two top hoses and one bottom hose at the radiator.
9. Disconnect the cables from the coolant probe in the header tank.
10. Disconnect the two heat exchange pipes from the underside of the radiator. Fit blanking plugs to prevent ingress of dirt.
11. Disconnect the header tank steam escape pipe and bleed hose from the header tank to the radiator.
12. Slacken the four nuts securing the fan and viscous coupling to the water pump pulley. Slacken the tension of all drive belts then remove the four retaining nuts.
13. Carefully withdraw the coupling and fan assembly, placing these inside the radiator cowl. **Take care not to damage the radiator matrix.**
14. Support the radiator then remove the four setscrews securing the assembly to the bonnet hinge panels.
15. Carefully withdraw the radiator and header tank.
16. Remove the fan and viscous coupling assembly from the cowl.

Radiator - To fit

To fit the radiator, reverse the procedure given for removal noting the following points.

1. Examine all hoses for deterioration and renew any found to be unserviceable.
2. Fill the system with a clean coolant solution.
3. Check the level of concentration as shown in Section L1 - Coolant - To check. Correct the level of concentration as necessary.

Important

After replacement of the radiator a check must be made for possible fouling of the fan blades on the radiator cowling, using the following procedures.

4. Check that a minimum clearance of 16mm. (0.63 in.) exists between the tip of the fan blades and around most of the cowling. A clearance of 9,5mm. (0.37in.) is acceptable at the lower section of the cowling.
5. To check that engine torque does not cause the fan to foul the cowling, apply the parking brake, set the engine onto fast idle by pressing the accelerator and then start the engine.
6. Select (D) Drive and (R) Reverse. Listen for any catching of the blades on the radiator cowling. No attempt must be made to increase engine speed above that of fast idle.
7. Choose an open stretch of dry road. When the road is free from any potential danger, accelerate the car sharply from a stand still position and listen for fouling of the blades on the cowling.

Radiator header tank - To remove (radiator in the car)

The header tank is supported on three brackets attached to the top face of the radiator.

1. Remove the radiator filler cap, open the drain tap and drain sufficient coolant to empty the header tank; approximately 2 litres (3.5 pints) into a clean container.
2. Slacken the worm drive clips and remove the hose between the header tank and the radiator.
3. Remove the header tank steam escape pipe at the header tank connection.
4. Disconnect the cables from the coolant probe.
5. Remove the three nuts, bolts and washers from the supporting brackets and remove the header tank.

Radiator header tank - To fit

To fit the header tank, reverse the procedure given for removal noting the following points.

1. Examine hoses for deterioration and ensure all worm drive clips are secure. Renew any hoses that appear to be unserviceable.

Printed in England
© Rolls-Royce Motors Limited 1977
September 1977
T.S.D. 4200

2. Replace the clean fluid drained from the system.
3. Check the concentration level of the coolant and if below the acceptable level of between 45% and 55% bring the coolant up to the acceptable level (see Section L1 Coolant - To check).

Booster fan - To remove

1. Disconnect the battery.
2. Remove the radiator grille. For details refer to Chapter S - Body.
3. Release the wiring loom attached along the upper mounting bar of the fan and unwind the adhesive tape to expose two Lucar connectors; disconnect the Lucars.
4. Remove the four setscrews attaching the mounting bars to the condenser end plates and withdraw the unit.
5. To remove the booster fan, unscrew the four bolts and self-locking nuts to dismantle the unit from the mounting bars.

Booster fan - To fit

To fit the booster fan reverse the procedure given for removal noting the following points.

1. When assembling the booster fan to the mounting bars ensure new self-locking nuts are used.
2. After connecting the wiring loom, cut away the unwrapped portion of adhesive tape. Completely cover the Lucar connections with new tape.
3. Touch in any black paint chipped or scratched from the area of the fan during removal.
4. Switch on the ignition, then test the fan by shorting the two wires from the switch of the thermostat outlet elbows to the engine casing.

Section L3

Thermostat

Thermostat - To remove (see Fig. L4)

1. Drive the car onto a ramp
2. Firmly apply the parking brake and remove the gear range selector thermal cut-out from the fuse-board. Disconnect the oil pressure switch situated behind the fan on the 'B' bank side of the engine, enabling the air conditioning system to operate without starting the engine.
3. Switch on the ignition and rotate the air conditioning system function switch to the DEF (defrost) position.

   Ensure that the fan motors are operating at maximum speed.

   Wait approximately 20 seconds for the lower servo to reach the full hot position and observe that all the air is diverted to the windscreen.

   This procedure opens the heater water tap ensuring the water system can be completely drained.
4. Switch off the ignition and carefully remove the radiator filler cap.
5. Raise the car to a convenient working height.
6. Place containers under the car to collect the coolant. Attach a length of rubber hose from the radiator drain tap to direct the coolant into the containers.
7. Open the radiator drain tap and drain the coolant from the radiator. When completed, remove the drain plugs to drain the residue from the crankcase.
8. On cars fitted with exhaust emission control equipment it will be necessary to disconnect the cable to the primary valve lock-out switch and, dependent on the car's domicile, to remove the air diverter valve. Refer to Chapter U - Emission Systems, for removal and fitting of exhaust emission control components.
9. Remove the setscrew to the air intake elbow bracket then the two setscrews securing the bracket to the thermostat cover and release the bracket.
10. Unscrew the remaining two setscrews securing the thermostat cover to the housing and move the cover to one side; the hose being sufficiently flexible to allow the desired movement without having to be removed.
11. Lift the thermostat from the housing.

Thermostat - To test

If the thermostat is suspected of being faulty, it can be tested as follows.

1. Suspend the thermostat and the bulb of an accurate thermometer into a container of water so that they are completely immersed. They must not be allowed to touch the sides or bottom of the container as this would cause a false reading.

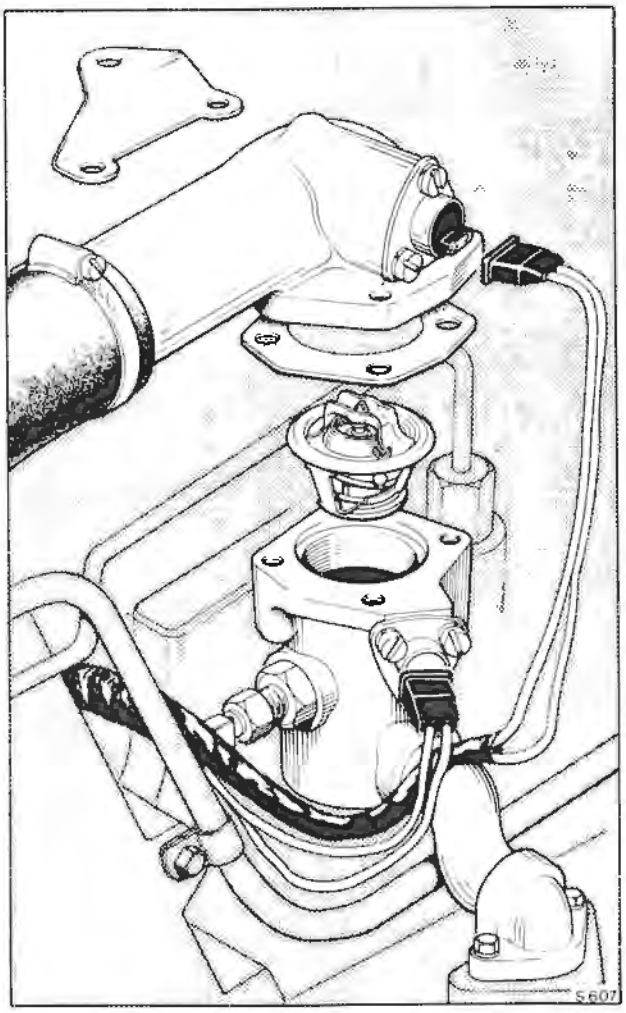

Fig. L4 Thermostat and housing for SU H1F7 carburetters

2. Gradually heat the water, stirring continuously to ensure that the water and thermostat are at a uniform temperature.
3. Note the temperature at the point when the thermostat valve begins to open.

   If the water is heated too quickly, or if it is not adequately stirred, a false reading may result.

   The thermostat has its opening temperature stamped on the base of the unit, for example, 80 C. (190 F.)

   When fully open, the valve should have travelled a minimum of 9,5mm. (0.375in).

   No attempt must be made to adjust the thermostat.
4. Check that the fusible plugs are intact.

Printed in England
© Rolls-Royce Motors Limited 1977
September 1977
P.S.D. 4200

Thermostat - To fit

1. Remove the old gasket material from the thermostat housing and cover, ensuring that no material enters the thermostat housing.

Check that the two faces are wiped clean.

2. Fit a new gasket and insert the thermostat into its housing.

3. Replace the cover and secure in position by progressively tightening the four setscrews.

4. Examine hoses for deterioration and ensure all worm drive clips are secured. Renew any hoses that are unserviceable.

5. Replace exhaust emission control components, if fitted.

6. Fill the system using the correct anti- freeze/ water mixture verifying and adjusting the concentration level using the method described in Section L1 Coolant - To check.

Section L4

Coolant pump

Coolant pump - To remove

For normal service and maintenance, including reconditioning, it is unnecessary to remove the pump casing from the engine.

All moving parts can be withdrawn, complete with the bearing housing. (see Fig. L5).

1. Raise the car to a convenient working height.

2. Place a clean container under the car to collect the coolant. Attach a length of rubber hose from the radiator drain tap tc direct coolant into the container.

3. Open the radiator drain tap (see Fig. L1) and drain the coolant from the radiator. Close the drain tap, cover the container to prevent contamination of the fluid then lower the car.

4. Remove the header tank from the radiator.

5. Dismantle the upper half of the fan cowl to facilitate withdrawal of the fan and viscous coupling assembly.

6. Remove the four nuts and washers securing the viscous coupling, fan and pulley to the driving flange.

When removed, it is not necessary to separate the fan and coupling unless one of them is to be replaced.

7. Release the tension on all drive belts. Remove the belts.

8. Slide the coolant pump pulley forward **carefully** to reveal the bearing housing setscrews.

9. Unscrew the six setscrews which secure the bearing housing to the coolant pump casing.

10. Detach the bearing housing containing all the moving parts of the pump. It will be possible to manoeuvre the pulley off the assembly at this stage.

11. Remove and discard the 'O' ring from the pump casing.

If it is necessary to remove the pump casing from the engine, carry out the following operations.

12. Slacken the worm drive clips and disconnect the pump casing to radiator bottom tank hose.

13 If the car is fitted with an exhaust emission control system, remove the air injection pump as described in Chapter U - Emission Systems.

14. Remove the nut and washer from the jockey pulley pivot pin and withdraw the jockey pulley assembly.

15. Remove the adjusting setscrew to the pivot plate of the steering pump (see Chapter N - Steering System Fig. N15). Swing the steering pump away from the engine.

16. Remove the nuts and bolts securing the refrigeration compressor but do not disconnect the pipe work. Lift bodily away from the working area placing carefully onto a protective cover to ensure that no damage is caused to other engine components.

17. Remove the alternator as described in Chapter M - Electrical System.

18. For cars fitted with **S.U. carburetters,** unscrew and remove the setscrews and plain washers from the by-pass elbow. Remove the elbow and swan neck pipe, discard the 'O' rings and gasket.

For cars fitted with a **Solex carburetter** remove the three setscrews attaching the lower pipe flange of the thermostat housing to the pump. By virtue of the allowable movement in the 'O' ring bobbins the thermostat flange can be moved slightly upwards when withdrawal of the pump is undertaken. Discard the gasket.

19. Slacken the worm drive clips and disconnect the hose from the expansion tank to coolant pump pipe and from the heater return pipe. Remove the setscrew and washer securing each pipe to the coolant pump casing, detach the pipes and discard the 'O' rings.

20. Unscrew and remove the two lower setscrews securing the coolant pump casing to the crankcase, and the two setscrews and plain washers entering the top of the coolant pump casing from the crankcase side with the air injection pump bracket attached.

21. Detach the coolant pump casing, together with the Neoprene sealing strip, fitted to its lower edge.

22. With a sharp knife, cut the paper gasket across the upper edge of the crankshaft front cover and discard this portion of the gasket.

Coolant pump - To dismantle

For normal service operation, the bearing housing will have already been separated from the pump casing.

1. Draw the impeller off the shaft using the special tool (RH 7098).

2. Remove the peg screw which retains the bearing in the housing.

3. Support the bearing housing to enable the bearing assembly to be lightly driven out with a mallet.

4. Remove and discard the seal and counter face.

5. Examine the shaft and bearing for wear and damage. The assembly contains lubricant. No attempt must be made to wash any of the components.

Note

Operations 6 to 8 are intended for use in areas where an assembled kit of replacement parts are not available.

6. If the diameter of the impeller end of the shaft is below the limits specified, (see Section L5 Dimensional Data), if it is damaged, or if the flange is damaged, it will be necessary to draw the flange off the shaft using special tool (RH 8615) and discard

Printed in England
© Rolls-Royce Motors Limited 1977
November 1977
T.S.D. 4200

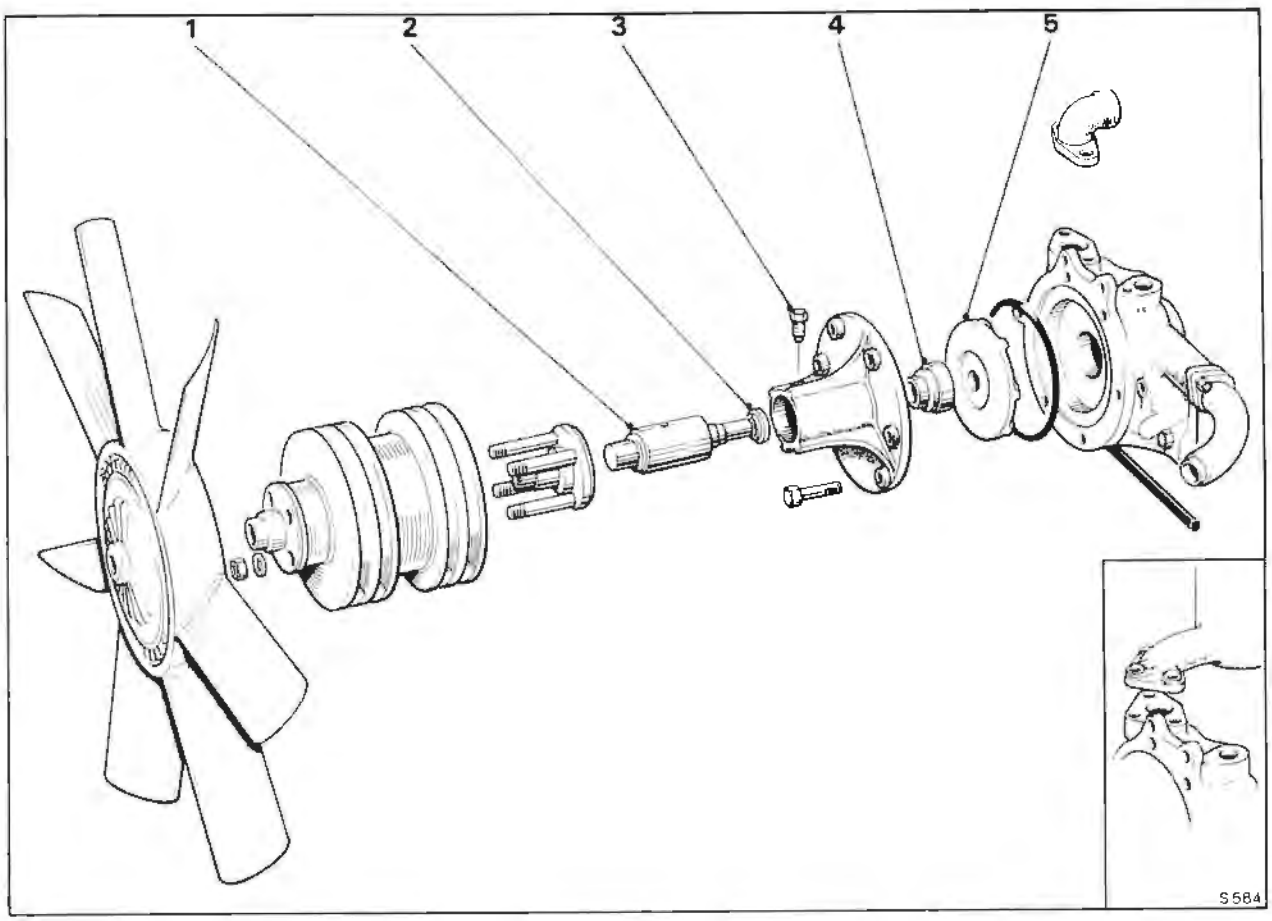

Fig. L5 Coolant pump. Exploded view
Inset - Thermostat housing mounting for cars fitted with Solex carburetters. Note that the mounting elbow is retained by three setscrews.
1 Shaft and bearing assembly.
2 Counterface.
3 Locating screw.
4 Sealing gland assembly
5 Impeller

the shaft or flange as necessary.

If no damage has occurred and the diameter of the shaft is within the specified limits it will not be necessary to withdraw the flange.

7. With the flange withdrawn, check that the bore of the flange conforms to the limits specified (see Section L5 Dimensional Data). If satisfactory, the flange may be used for further service.

8. Measure the diameter of a new shaft to ensure that the tolerances required for the flange and impeller are within the limits shown (see Section L5 Dimensional Data).

Coolant pump - To assemble

1. Before assembly, any damage marks on the joint faces of the bearing housing and pump casing should be removed using a fine carborundum stone.

2. Lightly coat the inside surface of the gland cover with a waterproofing solution such as 'Silastic' then fit the sealing gland assembly into the gland cover (see Fig. L6).

3. Fit the sealing gland assembly into the impeller end of the bearing housing. The assembly must lie flush with the end of the housing (see Fig. L5).

4. If the driving flange is not fitted at this stage press the flange onto the shaft. Check that the run-out of the flange is less than 0,05 mm. (0.002 in.) total indicator reading.

To check if the correct interference fit exists between the flange and shaft ensure a minimum load of 513kg. (1350lb.) is achieved during the pressing operation.

5. Fit a new seal counterface onto the shaft until the chamfered face abuts the shoulder.

6. Insert the impeller end of the shaft into the outer end of the bearing housing. Using a soft headed mallet, tap the bearing into the bore until the locating holes are aligned. Fit the locating screw.

7. Ensure the inner end of the shaft and the impeller bore are free from burrs.

8. Lightly smear the contact surfaces with Retinax 'A' grease.

9. Press the impeller into position on the shaft checking that a load of at least 363kg. (800lb.) is applied to give the correct interference fit between the impeller bore and shaft.

10. Using feeler gauges, ensure that the gap, between the faces of the bearing housing and impeller is 1,143 mm. to 1,219 mm. (0.045in. to 0.048in.).

Spin the assembly to ensure the shaft rotates freely.

Printed in England
© Rolls-Royce Motors Limited 1977
September 1977
T.S.D. 4200

Coolant pump - To fit

If the coolant pump casing was detached from the engine it should be fitted by reversing the procedure given for its removal. A new Neoprene sealing strip should be fitted to the bottom edge of the casing.

1. Remove any burrs which may exist on the joint face of the pump casing by lightly stoning with a fine carborundum stone.
2. Modify a new coolant pump casing gasket to suit the coolant pump casing.
3. All bolts should be tightened to the standard torque tightness figures, relative to size, shown in Chapter P.
4. Fit the belt driven auxiliaries as described in Chapter U for the air injection pump, Chapter N for the steering pump, Chapter C for the refrigeration compressor and Chapter M for the alternator.
5. Ensure a new strip of polyether foam is fitted between the upper quadrants of the fan cowl and radiator, before securing.
6. Examine all hoses for deterioration and renew any that are unserviceable. Check the security of all worm drive clips.
7. Fill the cooling system with the correct anti-freeze/water mixture as shown in Section L1 Cooling system - To fill, pouring slowly to avoid air locks.
8. Carefully examine all joints and hoses for leaks.

Belt tensioning (see Fig. L7)

The belt tensioning recommended for the various engine driven external auxiliaries is as follows.

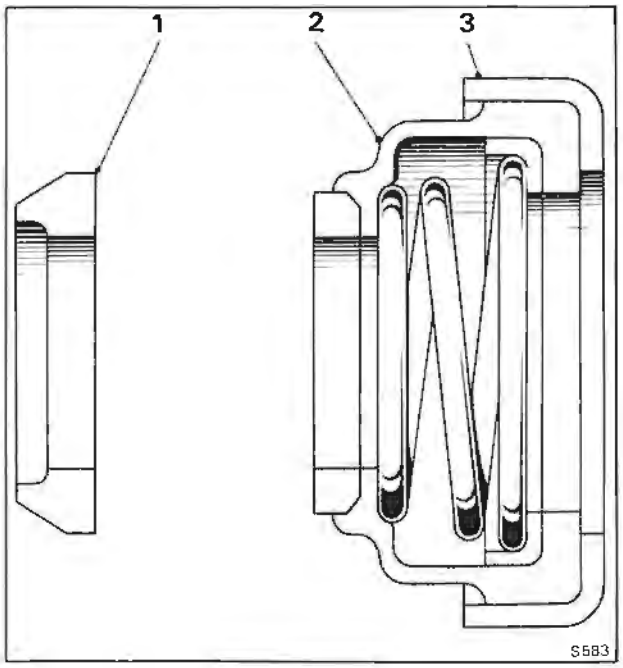

Fig. L6 Shaft seal and counterface

1 Counterface.
2 Sealing gland assembly.
3 Gland cover.

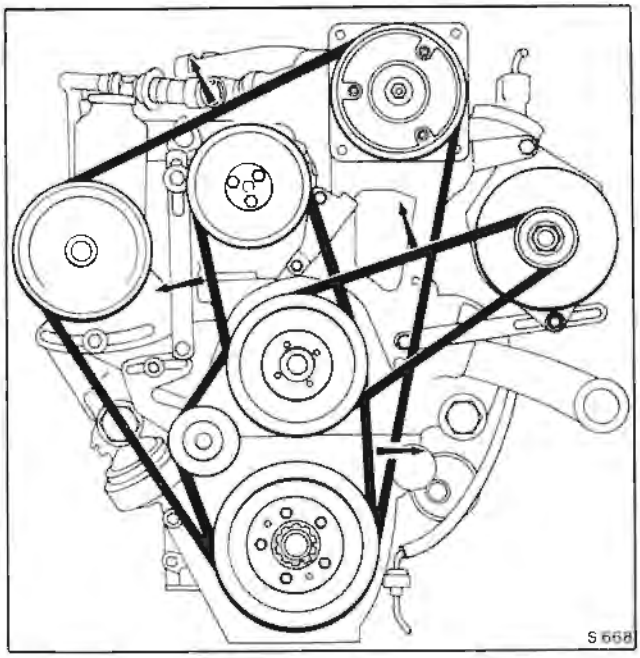

Fig. L7 Engine belt runs

Arrows show checking positions.

This must be checked at a point midway between the two pulleys by the use of a belt tension meter, (see Chapter N - Steering System Fig. N16), or by applying a spring balance to give a 9,5mm. (3/8in.) belt deflection.

In a pair of belts, if the tension of one belt differs markedly from the other, a new matched pair must be fitted.

Belt dressing must not be applied to prevent slip

The difference between the spring balance loads for similar belt tension meter loads is due to the varying lengths of belt between the individual pulley centres.

Crankshaft to coolant pump

Load may be applied on either side of the belt run.

Belt tension meter	23 kg (50lb)
Spring balance	4,1 kg (9lb)

Coolant pump to alternator

Load may be applied on either side of the belt run.

Belt tension meter	23 kg (50lb)
Spring balance	3,6 kg (8lb)

Steering pump to refrigeration compressor

Load must be applied on the top run of the belts. Each belt to be checked individually.

Belt tension meter	32 kg (70lb)
Spring balance	4,1 kg (9lb)

Coolant pump to air injection pump (cars fitted with exhaust emission control systems)

Load may be applied on either side of the belt run.

Belt tension meter	18 kg (40lb)
Spring balance	5,44 kg (12lb)

Section L5

Dimensional Data

Description	Diameter
Driving flange bore	18,905 mm. to 18,923 mm. (0.7443 in. to 0.7450 in.)
Impeller end of shaft	15,905 mm. to 15,918 mm. (0.6262 in. to 0.6267 in.)
Flange end of shaft	18,948 mm. to 18,961 mm. (0.7460 in. to 0.7465 in.)
Impeller bore	15,893 mm. to 15,880 mm. (0.6250 in. to 0.6255 in.)

Printed in England
© Rolls-Royce Motors Limited 1977
September 1977
T.S.D. 4200

Section L6

Workshop Tools

Tool Number	Description
RH 7098	Extractor - Coolant Pump Impeller
RH 8615	Extractor - Coolant Pump Driving Flange

Printed in England
© Rolls-Royce Motors Limited 1977
September 1977
T.S.D. 4200

Chapter M

Electrical system

Section

M1 Charging system
M2 Starting system
M3 Ignition system
M4 Warning lamps and instruments
M5 Speed control
M6 Windscreen wipers and washer
M7 Interior lighting
M8 Exterior lighting
M9 In-car entertainment
M10 Electrically operated front seats
M11 Electrically operated window lifts
M12 Centralised door locking
M13 Electric gear change
M14 Horns
M15 Hood mechanism

A wiring diagram for the fuel injection system fitted to 1980 model year cars destined for California, is included in Chapter U and Chapter V of this manual.

Printed in England

© Rolls-Royce Motors Limited 1980

May 1980

TSD 4200

Chapter M

Issue record sheet 1

December 1981

The dates quoted below refer to the issue date of individual pages within this chapter.

Section	M1	M2	M3	M3 Supp. 1	M3 Supp.2	M4	M5	M6	M7	M8	M8 Supp. 1	M9
Page No.												
1	May 80	Feb 77	Jul 79	Jul 79	Dec 81	Feb 77	Feb 80	Apr 77	May 77	Jul 79	Jul 79	Jul 79
2	Feb 77	Feb 77	Jul 79	Jul 79		Feb 77	Feb 80	Apr 77	May 77	Jul 79	Jul 79	Jul 79
3	May 80	Feb 77	Feb 77	Jul 79		Feb 77	Feb 80	Apr 77	May 77	May 77	Jul 79	Jul 77
4	May 80	Feb 77	Feb 77	Jul 79		Feb 77	Feb 80	Apr 77	May 77	May 77	Jul 79	Jul 77
5	Feb 77	Feb 77	Feb 77	Jul 79		Feb 77	Feb 80	Apr 77	May 77	May 77	Jul 79	Jul 79
6	Feb 77	Feb 77	Feb 77	Jul 79		Feb 77	Feb 80	Apr 77	May 77	May 77	Jul 79	Jul 79
7	Feb 77	Feb 77	Jul 79	Jul 79		Feb 77	Feb 80	Apr 77	May 77	May 77	Jul 79	Jul 79
8	Feb 77	Feb 77	Jul 79	Jul 79		Feb 77	Feb 80	Apr 77	May 77	May 77		Jul 79
9	May 80	Feb 77	Feb 77	Jul 79		Feb 77	Nov 80	Apr 77	May 77	May 77		Jul 77
10	May 80	Feb 77	Feb 77	Jul 79		Feb 77	Nov 80	Apr 77	May 77	May 77		Jul 77
11	Feb 77	Feb 77	Apr 77	Jul 79		Feb 77	Feb 80	Apr 77	May 77	May 77		Jul 77
12	Feb 77	Feb 77		Jul 79		Feb 77	Feb 80	Apr 77	May 77	May 77		Jul 77
13	Feb 77	Feb 77		Jul 79		Feb 80	Nov 80	Apr 77	May 77	May 77		Jul 77
14	Feb 77					Feb 80		Apr 77		May 77		Jul 77
15	May 80					Feb 80		Apr 77		May 77		Jul 77
16	May 80					Feb 80		Apr 77		May 77		
17	May 80					Feb 77		Apr 77		May 77		
18						Feb 77		Apr 77		May 77		
19						Feb 77		Apr 77		May 77		
20						Feb 77		Apr 77		May 77		
21						Feb 77		Jul 79		May 77		
22						Feb 77		Jul 79				
23						Feb 77		Apr 77				
24						Feb 77		Apr 77				
25						Feb 77		Apr 77				
26						Feb 77		Apr 77				
27						Feb 77		Apr 77				
28								Apr 77				
29								Apr 77				
30								Apr 77				
31								Apr 77				
32												
33												
34												
35												
36												
37												
38												
39												
40												
41												
42												
43												
44												
45												
46												
47												
48												

Printed in England
© Rolls-Royce Motors Limited 1980
T.S.D. 4200

Chapter M

Issue record sheet 2

December 1979

The dates quoted below refer to the issue date of individual pages within this chapter.

Section	M9 Supp.1	M10	M11	M12	M13	M14	M15	M16	M17
Page No.									
1	Jul 79	Dec 79	Jul 77	Aug 77	Aug 77	Aug 77	Sept 77	Sept 77	Sept 77
2	Jul 79	Dec 79	Jul 77	Aug 77	Aug 77	Aug 77	Sept 77	Sept 77	Sept 77
3	Jul 79	Jul 77	Jul 77	Aug 77	Aug 77	Aug 77	Sept 77	Sept 77	
4	Jul 79	Jul 77	Jul 77	Aug 77	Aug 77	Aug 77	Sept 77	Sept 77	
5	Jul 79	Jul 77	Jul 77	Aug 77	Aug 77	Aug 77	Sept 77	Sept 77	
6	Jul 79	Jul 77	Jul 77	Aug 77	Aug 77	Aug 77	Sept 77	Sept 77	
7	Jul 79	Dec 79	Jul 77	Dec 79	Aug 77	Aug 77	Sept 77	Sept 77	
8	Jul 79	Dec 79	Jul 77	Dec 79	Aug 77		Sept 77	Sept 77	
9	Jul 79	Dec 79	Jul 77	Aug 77	Aug 77		Sept 77	Sept 77	
10		Dec 79	Jul 77					Sept 77	
11		Dec 79	Jul 77					Sept 77	
12			Jul 77					Sept 77	
13			Jul 77					Sept 77	
14			Jul 77					Sept 77	
15			Jul 77					Sept 77	
16								Sept 77	
17								Sept 77	
18								Sept 77	
19								Sept 77	
20								Sept 77	
21								Sept 77	
22								Sept 77	
23								Sept 77	
24								Sept 77	
25								Sept 77	
26								Sept 77	
27								Sept 77	
28								Sept 77	
29								Sept 77	
30								Sept 77	
31								Sept 77	
32									
33									
34									
35									
36									
37									
38									
39									
40									
41									
42									
43									
44									
45									
46									
47									
48									

Printed in England
© Rolls-Royce Motors Limited 1979
T.S.D. 4200

Printed in England
© Rolls-Royce Motors Limited 1977
September 1977
T.S.D. 4200

Chapter M

Electrical system

Introduction
The electrical system is negative earth. Components not described within this chapter are detailed as follows:
Automatic air conditioning – Chapter C
Emission control – Chapter U

Some changes have been made in this edition of the Electrical system, the main one being the addition of separate system wiring diagrams and fault diagnosis. In addition, each section covers all the components that are in the system with one or two exceptions. For example, the battery, battery temperature sensors, alternator, regulator etc. are all within Section 1, the Charging System

Connector code
The wiring diagrams are basically theoretical circuits showing all plug and socket connectors, which can be identified using the following code. The pin numbers referred to are viewed with the plug inserted and do not necessarily correspond with the numbers moulded on the plug and socket.

Code	Location
B	Body socket
C	Console
D	Door socket
FA	Fuseboard 'A'
FB	Fuseboard 'B'
V	Valance
R	Relay P.C.B.
M	Main distribution
TA	Toeboard socket 'A'
TM	Toeboard socket M
G	Gearbox actuator
S	Switchbox
DI	Direction indicator
WD	Window demist socket
OC	Oil check switch socket
PD	Panel dim socket
HW	Hazard warning socket
SL	Seat loom
TL	Tape loom
CR	Radio changeover relay
SA	Seat actuator

When the code is in brackets e.g. (LTK), this shows alternative socket used on left-hand drive cars.

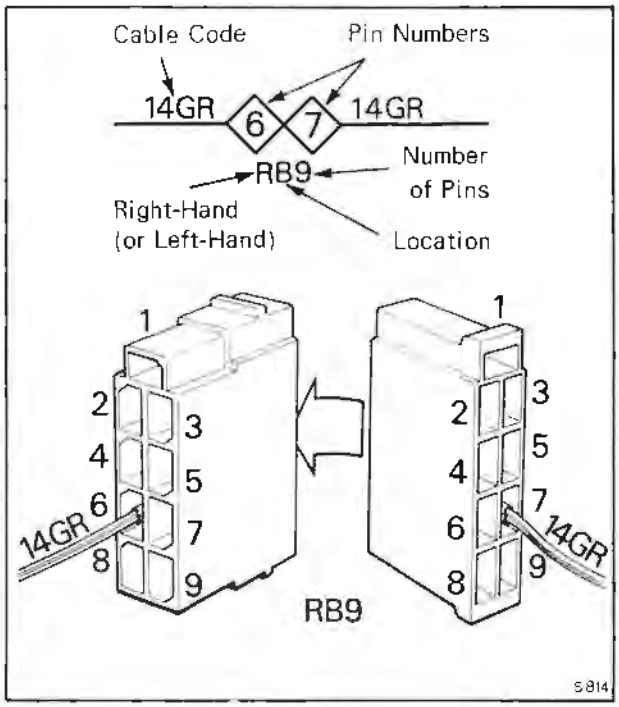

Cable colour code
The colour code has not changed although all cables are now plastic-covered.

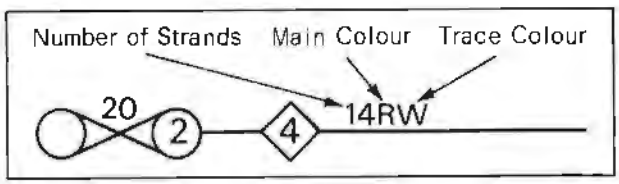

B	Black	LG	Light green
N	Brown	U	Blue
R	Red	S	Slate
O	Orange	P	Purple
Y	Yellow	W	White
G	Green		

Component identification
The following list will help to identify some of the components used in the wiring diagrams:

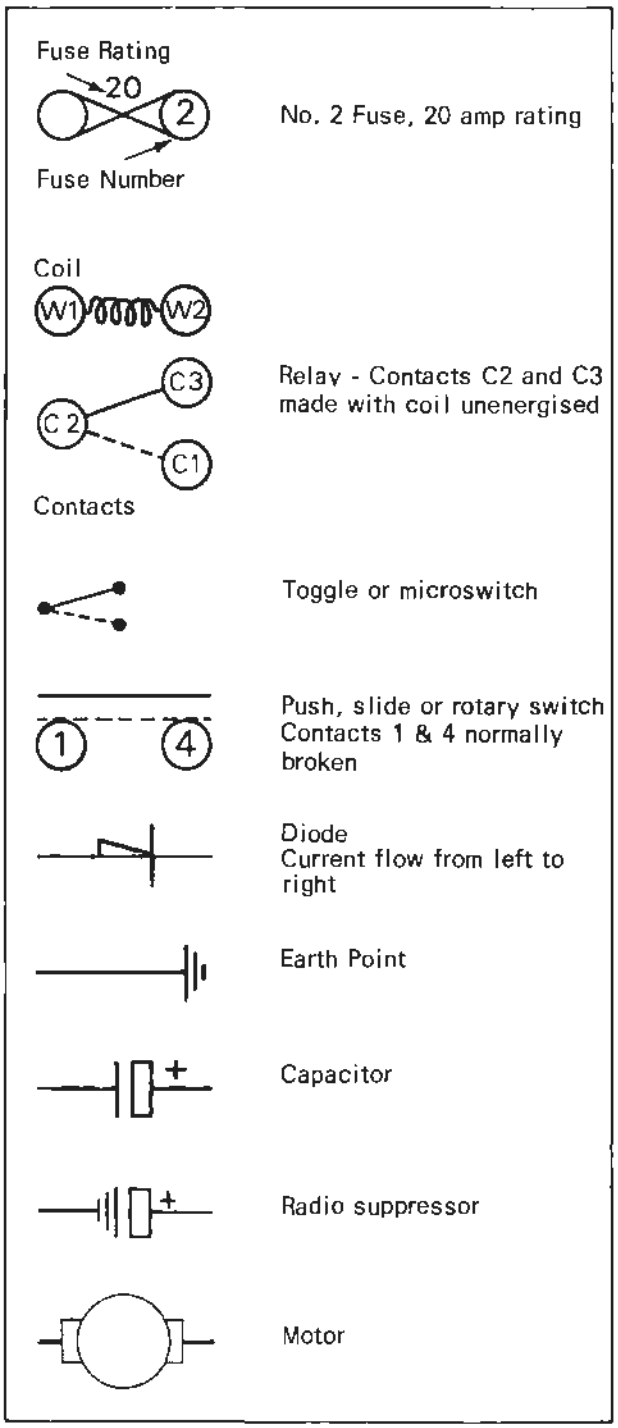

Printed in England

© Rolls-Royce Motors Limited 1977

February 1977

T.S.D. 4200

Chapter M

Component location
Right-hand drive cars

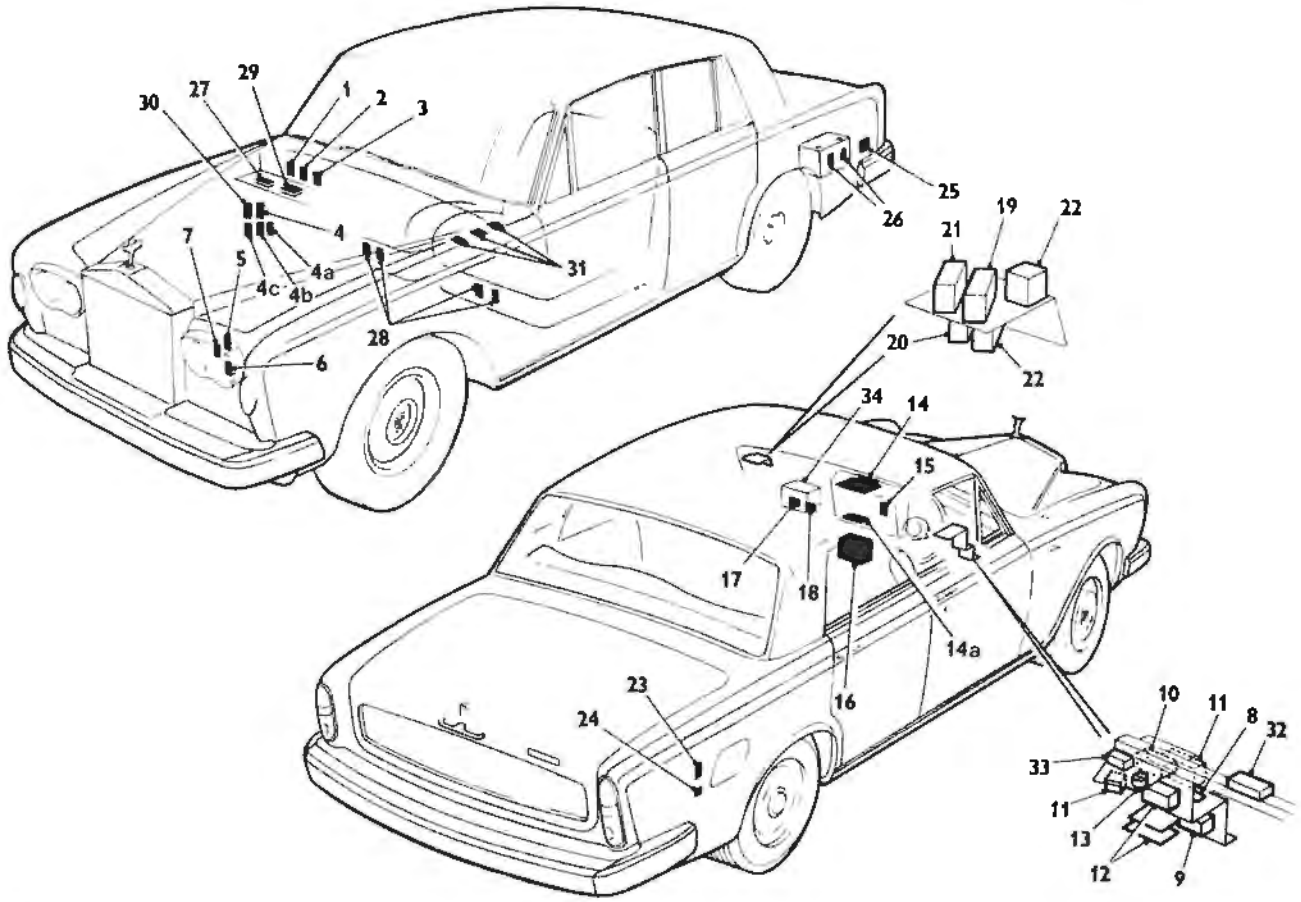

1 Fan and compressor relay
2 Fan delay relay
3 Servo isolation relay
4 Choke on start relay - SU Carburetter engines only
4a Choke heater relay - Solex carburetter engines only
4b Choke heater resistor relay (Solex only)
4c Choke heater resistor (Solex only)
5 Horn relay
6 Head flash relay
7 Head safety relay
8 Diodes for washer fluid level speed control and headlamps wash (when fitted)
9 Fuel pump relay
10 Intermittent and wash/wipe control unit
11 Interior lamps delay unit and relay
12 Instrument lights dimming unit and relay
13 Engine overheat buzzer
14 Warning light test board
14a Radio/tape changeover relay
15 Hood down temperature relay - Upper system (Convertible)
16 A.C.U. Servo
17 Lower quantity relay
18 Fan shut off relay
19 Recirculation flap relay
20 Rear fog lamps relay
21 Hood interlock relay (Convertible)
22 Washer fluid level amplifier and relay
23 Rear window demist relay (except Convertible)
24 Stop lamp failure relay
25 Voltage regulator
26 Battery temperature switches
27 Fusebox - fan and compressor
28 Seat motor relays
29 Ammeter shunt
30 Starter relay
31 Wiper function relays
32 Automatic speed control box
33 Automatic speed control relay
34 Fan speed module and voltage stabiliser unit

Note - items 20 and 22 can be transposed

Printed in England

© Rolls-Royce Motors Limited 1977

February 1977

T.S.D. 4200

Chapter M

Component location
Left-hand drive cars

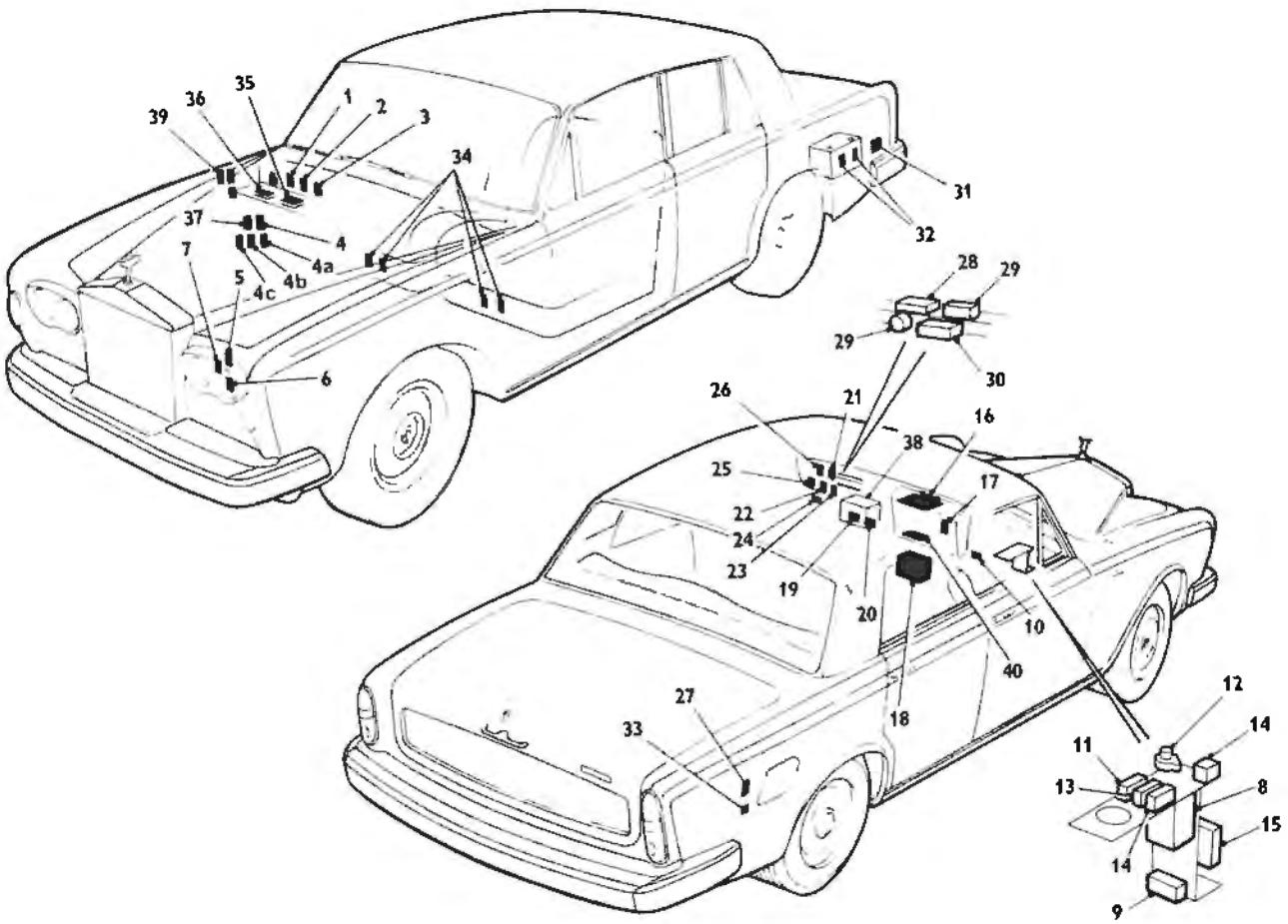

1 Fan and compressor relay
2 Fan delay relay
3 Servo isolation relay
4 Choke on start relay - SU carbs only
4a Choke heater relay - Solex carb only
4b Choke heater resistor relay - Solex carb only
4c Choke heater resistor - Solex carb only
5 Horn relay
6 Head flash relay
7 Head safety relay
8 Combined wiper function module
9 Hood interlock relay (convertible only)
10 Seat belt warning (USA only)
11 Low washer fluid lamp relay
12 Engine overheat buzzer
13 Panel lamps relay
14 Interior light delay unit and relay
15 Panel lamps unit
16 Test circuit board for warning lamps
17 Hood down temperature relay (convertible only)
18 A.C.U. Servo unit
19 Fan shut off relay
20 Lower quantity relay
21 Fuel pump cut-off relay (not USA)
22 Speed control relay
23 Rear fog lamps relay (when fitted)
24 Diode board for washer level and auto speed control
25 Recirculation flap relay
26 Washer level amplifier
27 Rear window demist relay (except Convertible)
28 Auto-speed control electronic control box
29 Key warning buzzer and relay (USA only)
30 EWL ignition control (when fitted)
31 Voltage control unit
32 Battery temperature sensors
33 Stop lamp failure relay
34 Seat relays
35 Ammeter shunt
36 Fusebox - fan and compressor
37 Starter relay
38 Fan speeds module
39 Wiper operation relays (3)
40 Radio/tape changeover relay

Section M1

Charging system
Contents

	Page
Introduction	M1 - 3
General precautions	M1 - 3
System operation	M1 - 3
Battery	M1 - 3
Battery temperature sensors	M1 - 4
Alternator Model CAV 512	M1 - 4
Regulator Model 440	M1 - 7
Ammeter and ammeter shunt	M1 - 7
Charging system - Fault diagnosis	M1 - 9
Component location	M1 - 13
Wiring diagram Sheet 1 of 2 Applicable to all cars prior to car serial numbers SRX 34573, LRG 34601, SBH 34775, CRH 34830 and DRX 33029	M1 - 15
Sheet 2 of 2 Applicable to all cars from car serial numbers SRX 34573, LRG 34601, SBH 34775, CRH 34830 and DRX 33029	M1 - 17

Printed in England
© Rolls-Royce Motors Limited 1980
May 1980
T.S.D. 4200

Printed in England
© Rolls-Royce Motors Limited 1980

Section M1

Charging system

Introduction
The wiring diagram at the end of this section shows all components used in the charging system and are detailed in this section with the following exceptions: Ammeter and ammeter shunt - Section M4, Ignition warning lamp - Section M3.

General precautions
It is essential that the following precautions are taken to avoid irreparable damage to the system when carrying out vehicle maintenance.

The battery must not be connected or disconnected whilst the engine is running.

The engine must be switched off before attempting to disconnect a lead from the charging system

1. Whenever a lead is disconnected, it should be identified in relation to its terminal to facilitate reconnection. Short circuiting or reverse polarity, no matter how brief, will cause immediate and permanent damage to transistors and diodes.
2. The battery must not be connected into the system without first checking for correct polarity.
3. Radio interference suppressors are fitted to the 'A' terminal of the regulator and to the 'A' and + terminal of the alternator. **Do not connect suppressors to the 'F' terminal** (brown/green lead).

System operation
The initial field excitation is supplied from the battery via the warning lamp when the ignition switch is closed. The voltage generated from the initial field excitation is rectified by three auxiliary diodes in conjunction with three main diodes and supplements the field current from the battery to rapidly build-up the voltage to the full battery value. At that moment, the potential of terminal A is equal to that of the alternator positive terminal, consequently the warning lamp is extinguished and all the field current is now supplied from alternator terminal A. When the voltage at terminal A rises in excess of battery voltage, the value at the alternator positive terminal will also rise and charging current will be supplied to the battery.

The regulator controls the alternator output voltage by rapidly switching the alternator field voltage on and off by means of transistors, the reference voltage being provided by a zener diode.

Battery

Important
It is imperative that the negative (earth) lead is disconnected from the battery before commencing work on the electrical system or components, or if any electric arc welding is to be used on the car. **The battery must not be disconnected or connected whilst the alternator is running** nor connected into the system without first checking correct polarity.

Corrosion
To remove corrosion from the battery leads and terminal posts, disconnect the leads and wash with hot water or a dilute solution of ammonium carbonate.

The ammonium carbonate must be removed with clean water; thoroughly dry the leads and terminal posts with a cloth.

After connecting the battery leads to the battery terminals, smear the terminals with petroleum jelly (not grease).

Battery - To charge

Warning
The gases given off during charging are highly inflammable.

1. Remove the battery from the car.
2. Ensure that the battery charger is switched off.
3. Connect the charger leads to the battery, **ensuring that the positive lead is connected to the positive terminal.**
4. For normal charging, leave the screw caps in position but remove them when boost charging.
5. Switch on the charger and adjust the current to 7 amps (max).
6. Periodically measure the specific gravity and compare with the values shown in Table 1. When the fully charged value is attained, the charging is complete.

Initial charge - For new batteries
1. The specific gravity figures given in Table 1 are correct at 15.6 °C. To the specific gravity measured, add 0.00072 for every 1 °C above this

May 1980
T.S.D. 4200

temperature.
e.g. Measured S.G
1.265 at 32.3 °C

Correct S.G.=
1.265 + (32.3-15.6)
x 0.00072 =
1.265 + (16.7)
x 0.00072 =
1.265 + 0.01202
=1.277.

2. Fill the battery with cool accumulator acid preferably between 4 °C and 27 °C of the correct specific gravity given in Table 1.
3. The electrolyte level will fall soon after filling and must be restored by adding more electrolyte, after which the battery must stand for 3 hours. After this time, it will again be necessary to top-up to obtain the correct level.
4. The recommended charge rate is 7 amps for 12 hours. The charge may be interrupted provided that the charging periods are at least 8 hours and the rest periods do not exceed 16 hours.
5. The charge will not be complete until the total specified charging time has elapsed, the voltage and specific gravity of each cell has remained constant throughout 5 successive hourly readings and gas is being freely emitted from each cell.
6. When the charge is completed, the specific gravity of the acid in each cell should not exceed the figures quoted in Table 1; if it does, acid must be withdrawn from the cell(s) and an equal amount of distilled water added. The battery should then be charged for a further one hour and the specific gravity measured again.

The final adjustment of the acid level should be made after the battery has been standing for two hours to allow excess gas to escape and the electrolyte level to fall.

Table 1

Air temperature below 32 °C (90 °F)

Specific Gravity	Condition of battery
1.270 to 1.290	Fully charged
1.180 to 1.200	Half discharged
1.090 to 1.110	Fully discharged

Air temperature above 32 °C (90 °F)

Specific Gravity	Condition of battery
1.220 to 1.240	Fully charged
1.150 to 1.170	Half discharged
1.070 to 1.090	Fully discharged

Battery temperature sensors

The temperature sensors determine the optimum output voltage necessary to charge the battery. Two sensors are fitted inside the battery box, one which opens when the temperature falls below 0 °C and one which closes when the temperature exceeds 35 °C.

The last two figures on the sensor indicate the operating temperature i.e. 00 opens at temperatures below 0 °C and 35 closes at temperatures above 35 °C.

Sensors - To test

Cable colours for cars from serial numbers SRX 34573, LRG 34601, SBH 34775, CRH 34830 and DRX 33029 are given in brackets.

Disconnect the brown, brown/blue (white) and brown/red (red) cables from the High, Medium and Low connections of the regulator.

If the ambient temperature is between 0° C and 35°C there should be continuity between the brown and brown/blue (white) cables and an open circuit between the brown/blue (white) and brown/red (red) cables. With the ambient temperature above 35 °C, there will be continuity between the brown/blue (white) and the brown/red (red) cables. With the ambient temperature below 0 °C there will be an open circuit between the brown and brown/blue (white) cables.

Remake the connections to the regulator ensuring that the brown cable between the regulator and the battery is also connected.

Alternator Model CAV 512

The alternator is a three-phase machine of the revolving field and stationary armature type and is self-limiting in current output. Rectification of the output into direct current is provided by six diodes contained within the slipring end-shield and connected in a three-phase bridge circuit between the stator and output terminals. A second rectifier bridge is formed by using three of the six main diodes and three auxiliary diodes, and these supply the energy for the alternator field coil which is fed through sliprings and brushes. This arrangement of auxiliary diodes prevent the battery from discharging through the field coil when the alternator is stationary.

The alternator fitted to the Corniche is an AC5B/12/38 with an output of approx. 53 amps. The alternator fitted to Silver Shadow II and late 1976 Camargue is an AC5B/12/53 with an output of approx. 75 amps.

Alternator - To test in position

1. Connect a 0-50 volt first grade moving coil voltmeter between the regulator negative terminal and the positive terminal marked H1.
2. Connect a 0-100 amp first grade ammeter in series in the alternator positive line.
3. With the battery in a fully charged condition, the system is in correct working order when the following sequence is observed:
4. Switch the ignition on and observe that the warning lamp marked GEN illuminates.
5. Switch on all the electrical loads with the exception of the windscreen wipers.
6. Start the engine, allow it to run at approximately 1000 r.p.m. and observe that the warning lamp is extinguished.
7. Momentarily increase the engine speed to approximately 3000 r.p.m. and observe that the alternator current is approximately 53/75 amps

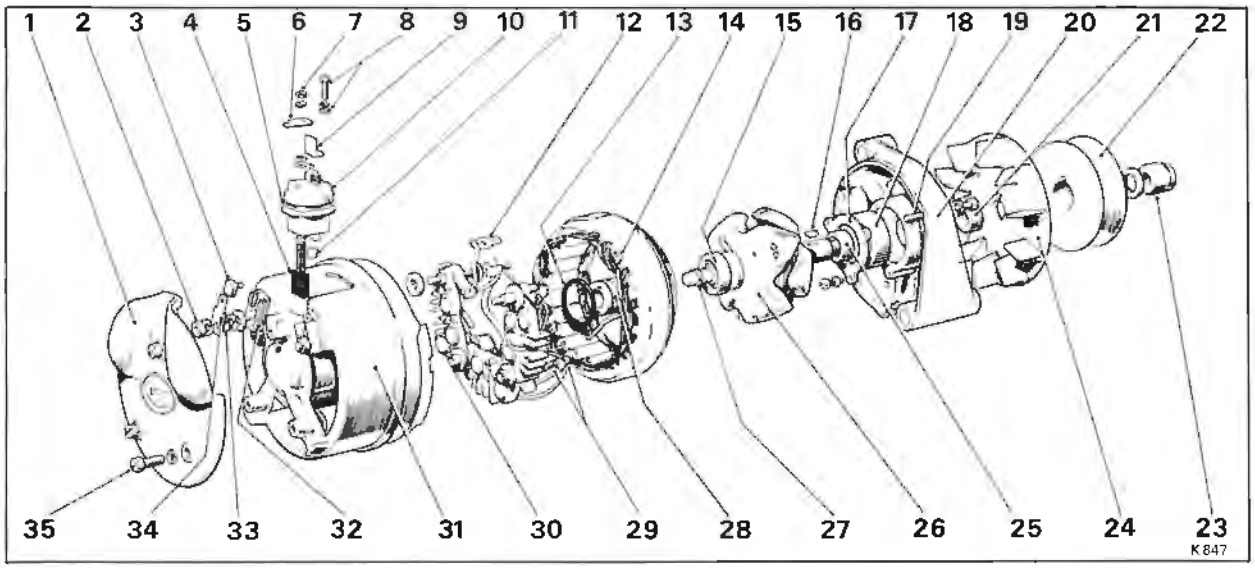

Fig. M1 Exploded view C.A.V. type 512 alternator

1 Baffle
2 Main terminal nut
3 Insert
4 Brush
5 Gasket
6 'Lucar' blade
7 Field terminal nuts and washers
8 Retaining screw and washers
9 Insulator
10 Brush holder
11 Grommet
12 'A' lead
13 'O' ring
14 Stator
15 Bearing
16 Woodruff key
17 Clamp plate
18 Bearing
19 'Through" bolt
20 Drive-end shield
21 Fan spacer
22 Pulley
23 Pulley nut
24 Fan
25 Bearing spacer
26 Rotor
27 Circlip
28 Slip rings
29 Heat sink securing screw
30 Diode and heat sink assembly
31 Slip ring end shield assembly
32 Shroud
33 Round slotted nut
34 'Lucar' terminal
35 Baffle screw

8. With the engine running at approximately 1500 r.p.m. switch off all the loads. The voltage should rise to between 14.0 and 14.5 volts and then remain constant, the current reading should drop appreciably.

9. Should there be a fault in the system this will be apparent by one or more of the following symptoms:

10. If the warning lamp does not illuminate check the bulb and renew if defective.

11. If the bulb is serviceable but does not illuminate, check the regulator by first switching off the engine and disconnecting the lead from terminal F on the regulator. Clip this lead to earth and switch on the ignition. If the lamp now illuminates the regulator is faulty and must be replaced by a new regulator. If the lamp still remains unlit then the alternator is faulty.
The tests described in 9-11 may be used to locate the alternator fault. Having located the fault, switch off the engine and reconnect the F lead to F terminal.

12. Tests on the alternator can be carried out on the engine by partial dismantling in the following manner:

13. Field winding
Disconnect the leads from F and A terminals on the alternator and remove brush gear moulding. Measure the field resistance across the slip rings which should be 3.2 ohms ± 0.16 ohms. An appreciably lower field resistance could mean a short circuit between the coils: a higher reading indicates that the contact surfaces of the slip rings need cleaning. A reading of infinity indicates an open circuit in the field.

14. Brushes (see Fig. M2)
If the field resistance is correct check that the brush length is greater than the minimum length of 7.94 mm. (0.312 in.) and ensure that proper contact with the slip rings is made.

15. Slip rings
The surface of the slip rings should be smooth and uncontaminated by oil or other foreign matter. The surface may be cleaned with very fine glass paper without fully dismantling the machine. On no account must emery cloth or similar abrasive be used.

16. Stator winding
Low output or no output at all from the alternator may be due to either a faulty stator or a faulty

Printed in England
© Rolls-Royce Motors Limited 1977
February 1977
T.S.D. 4201

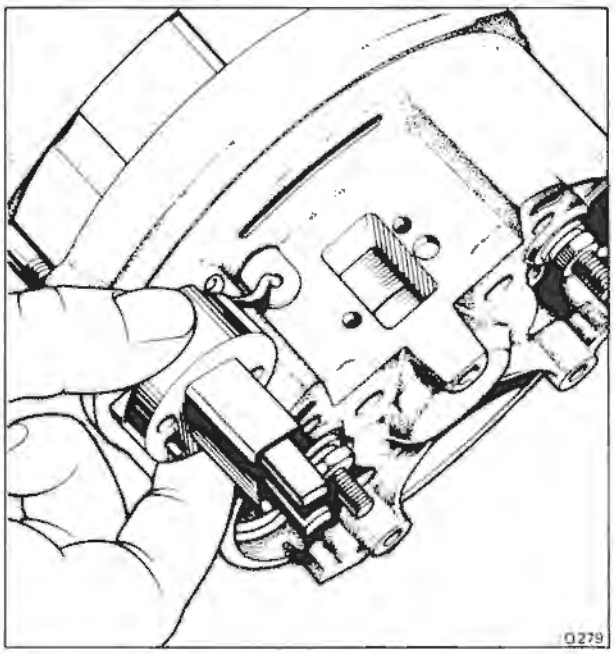

Fig. M2 Alternator brushes

diode in which case it is difficult to distinguish between the two faults without first dismantling the alternator. In these circumstances it is necessary to remove the stator from the alternator and measure the volts drop across each pair of three stator connections as described in Alternator - Bench testing.

Alternator - Bench testing (AC5B/12/38)

1. Before making any connections, test the alternator for earths by non-destructive flash test (or megohm meter) with voltage rating of 110 volts. Connect instrument between D+ and earth, D- and earth and A terminal and earth. Ensure always to keep one probe on the frame to prevent full test voltage being applied between any two terminals of the alternator. A megohm meter must have a minimum insulation resistance of 10 megohms.
2. Mount the alternator to the test machine drive and make all connections as in wiring diagram M3.
3. Close switch 4 and observe that the lamp is lit.
4. Start the drive and increase speed until the lamp is extinguished which indicates that the alternator is charging. This should occur below 2000 r.p.m..
5. Reduce alternator speed to 1125 r.p.m. and measure the voltage between HIGH and -ve on the regulator. This should be between 12 and 14 volts.
6. Connect the voltmeter across the battery terminals, apply load of 40-50 amps and increase alternator speed to 3200 r.p.m.
7. Observe ammeter (2) reading which should be 50-55 amps at 13-13.6 volts.
8. Increase speed to 10 000 r.p.m. and again observe ammeter reading which should be between 60 and 65 amps at 13-14 volts. Adjust battery load as necessary.
9. Run at 10 000 r.p.m. for one minute.
10. Decrease speed to 3000 r.p.m. and switch off loads connected across battery, the voltage should rise to between 13 and 14 volts and then remain constant. At the same time, the current reading should drop appreciably.
11. Open switches 8 and 9, the voltage should be between 14.5 volts and 15.0 volts.
12. Close switch 8, the voltage should now fall to between 14.0 and 14.5 volts.
13. Close switch 9, the voltage should now fall to between 13.5 and 14.0 volts.

Alternator - Bench testing (AC5B/12/53)

1. Carry out operations 1 to 3 as for AC5B/12/38 alternator.
2. Start the drive and increase speed to 1500 r.p.m. the warning lamp should be extinguished.
3. Reduce alternator speed to 1200 r.p.m. and measure the voltage between HIGH and -ve on the regulator. This should be between 12 and 14.5 v.
4. Connect the voltmeter across the battery terminals, increase the speed to 2100 r.p.m. and verify that ammeter (2) reading is approx. 50 amps at 14 volts. Adjust load as necessary.
5. Increase speed to 6000 r.p.m. and verify that the ammeter reading is 75 amps at 14 volts.
6. Carry out operations 9 to 13 of AC5B/12/38 bench test.

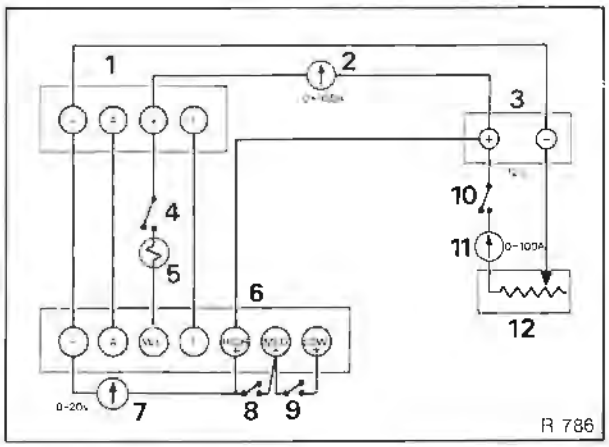

Fig. M3 Bench testing rig

1	Alternator	7	Voltmeter
2	Ammeter	8	Switch
3	Battery	9	Switch
4	Switch	10	Switch
5	16v 2.2w lamp	11	Ammeter
		12	Carbon pile resistor (60 amps minimum)
6	Regulator		

Alternator - To fit

When fitting an alternator, ensure that all connections are correctly fitted and that the earth strap is routed as shown in Fig. M4.

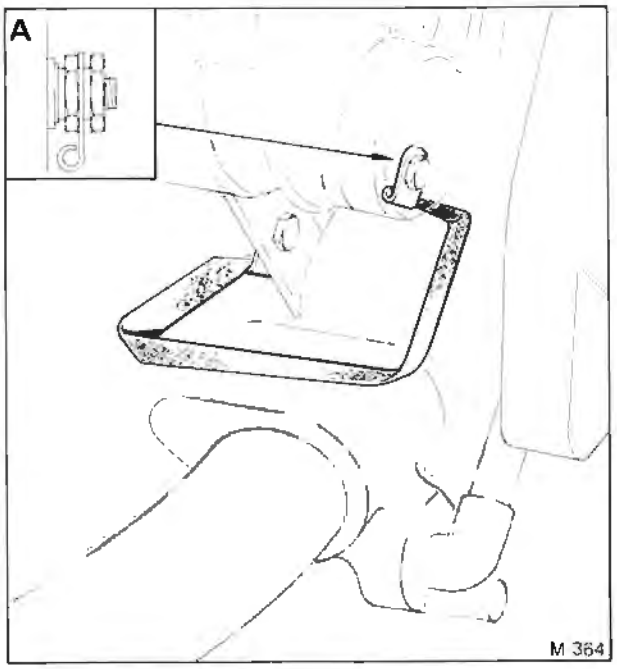

Fig. M4 Correct route of earth strap

Regulator Model 440

The regulator is fully transistorised with no moving parts, does not require service attention and is non-repairable. A cut-out relay is not necessary as the diodes in the alternator prevent reverse currents from passing through the stator when the machine is stationary or when generating less than battery voltage.

It requires little maintenance other than to ensure that the cooling fins are clean and un-obstructed. If a fault occurs, the regulator must be replaced.

Ammeter and ammeter shunt

Refer to Section M4 for details of the ammeter and ammeter shunt.

Printed in England
© Rolls-Royce Motors Limited 1977
February 1977
T.S.D. 4200

Section M1

Charging system Fault diagnosis

Malfunction	Possible cause	Action
Flat battery	Slipping belts	Check belt tension
	Poor battery connections	Ensure that battery terminals and earth wingnut terminal are clean and secure
	Faulty battery	Recharge from external source. After recharging check specific gravity of each cell. Readings with more than 40 points variation indicate that the battery is suspect
	Continuous drain on battery	Switch off all electrical loads (except electric clock), close all doors, close bonnet and disconnect luggage compartment lamp switch. Check for current leakage in the earth (negative) lead by connecting a 12 volt 2.2 watts lamp in the line, the lamp should not illuminate. The maximum continuous current drain, which is through the regulator circuit should not exceed 8 milliamps. Locate source of leakage by removing fuses one at a time. A fully charged battery should be used for these checks.
	Faulty alternator	Disconnect the battery earth connection and the 120 Brown/White cable from shunt. Connect 0/75 amp ammeter between the 120 Brown/White cable and the corresponding terminal on the shunt. Reconnect the battery. Switch Auto ACU to DEF and headlamps to MAIN BEAM. Start the engine and increase engine speed to approximately 3000 r.p.m., the ammeter should initially indicate 55 (or 75) amps min., a low reading indicates a system fault. No output could be due to any of the following: Faulty alternator, defective alternator to regulator wiring, regulator, open circuit in the regulator positive (brown) or negative (black) leads To isolate fault proceed as follows: Remove F (brown-green) and negative (black) leads from regulator and connect together, switch on electrical loads as previously mentioned, start engine and gradually increase engine speed. If alternator output is restored, replace the regulator unit. **The engine speed must not exceed 2500 r.p.m.** during this test as,without the regulator in circuit, there is no control over the system voltage. If the alternator is still low on output, check the 14 brown and black leads (H1 and -ve) to ensure that there is a supply and earth to the regulator To determine if the alternator is satisfactory disconnect the leads to the A and F terminals disconnecting also the suppressor condensor on the A terminal. Connect a 12 volt 2.2 watt test lamp

Printed in England
© Rolls-Royce Motors Limited 1980

Malfunction	Possible cause	Action
Flat battery cont.	Faulty alternator cont.	between the main alternator positive terminal and A, short the F terminal to earth. Switch on electrical loads and gradually increase engine speed. No output indicates a faulty alternator which should be removed for bench testing. If the alternator is satisfactory, check the continuity and insulation of both the alternator to regulator A and F leads and also the suppressor condenser NOTE: When carrying out insulation checks on the leads they must be disconnected at both the regulator and alternator To check regulator 14NY warning lamp lead see 'Warning lamp fails to illuminate'. 'A short to earth on this lead will prevent the alternator from working).
	Faulty regulator	Connect a 0-20 volt voltmeter across the battery terminals, run the engine up to 2000 r.p.m. with minimum electrical loads switched on. Observe car ammeter and record voltmeter reading when charge rate is below 10 amps. Voltmeter reading should be 14.0 to 14.5 volts at 20° C,13.5 to 14.0 volts below 0° C and 14.5 to 15.0 volts above 35° C. If setting is high, disconnect 14 brown-red and 14 brown-blue leads from regulator. At temperatures between 0° C and 35° C there should be continuity between the 14 brown and 14 brown-blue leads. If this check is satisfactory, change regulator, connect all leads and check regulator setting.
	Charging circuit-voltage drop	Connect voltmeter between alternator '+' ve output terminal and the battery '+' ve terminal. Switch headlamps to main beam and run engine at approximately 3000 r.p.m.; note voltmeter reading. Transfer voltmeter connections to battery '—' ve terminal and alternator '—' ve terminal and repeat. The voltmeter readings should not exceed 0.5 volts for the live lead and 0.25 volts for the earth side. Higher readings indicate a high resistance connection in the circuit
Overcharging	Faulty regulator	Check regulator setting as in Faulty regulator; replace regulator if outside specified limits
	Faulty battery	Check as in Faulty battery
Warning lamp fails to illuminate when ignition is switched on. (On cars from serial numbers SRX 34573, LRG 34601, SBH 34775, CRH 34830 and DRX 33029, the ignition warning lamp connection has been taken from the left-hand 'A' post plug and socket connection of the alternator to regulator brown/slate cable, see Figure M1-17 sheet 2).	Faulty connections or warning lamp bulb	Remove switchbox and check bulb. If fault persists check supply to warning lamp. To check continuity of 14NY, disconnect 14NY cable at regulator WL and short lead to earth, warning lamp should illuminate. If the lamp is satisfactory, check the continuity of the alternator to regulator A and F leads and the alternator field by removing the 14NG (F) lead from the regulator (all other leads being connected) and short directly to earth, the warning lamp should illuminate. If satisfactory, check 14N and 14B leads on regulator for supply volts and earth; change regulator.

Malfunction	Possible cause	Action
Warning lamp fails to extinguish, alternator not charging	Broken belt	Examine belts
	Faulty regulator	Check regulator
	Faulty connection	Check connection
	Faulty alternator	Check alternator
Alternator output low	Slipping belts	Check tension
	Faulty alternator	As for Faulty alternator
	Faulty regulator	As for Faulty regulator
Intermittent alternator charge	Loose connections in car wiring	Check charging circuit connections at shunt, starter motor, battery, alternator output plug, toeboard sockets and body sockets.
	Faulty regulator or alternator	Check for loose connections on regulator, brush gear and slip rings. Change regulator.

Printed in England
© Rolls-Royce Motors Limited 1977
February 1977
T.S.D. 4200

Charging system

Component location
Fig. M5

Printed in England
© Rolls-Royce Motors Limited 1977
February 1977
T.S.D. 4200

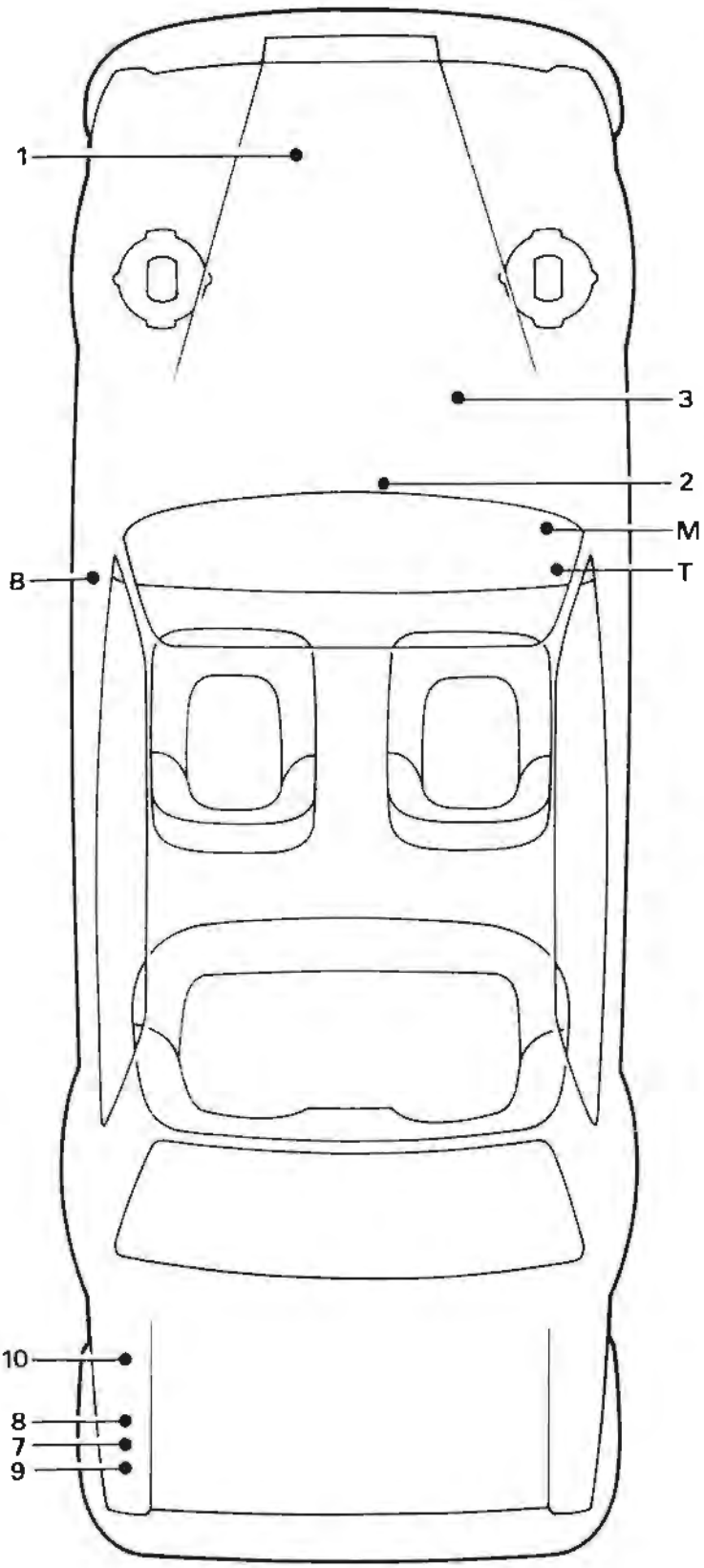

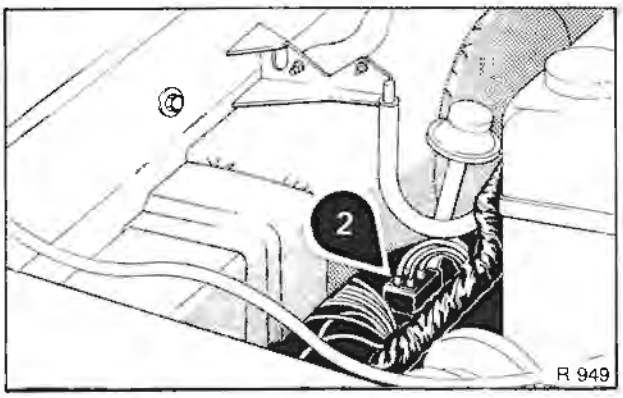

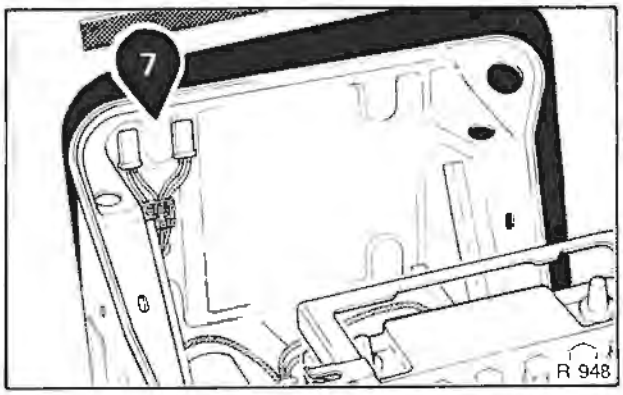

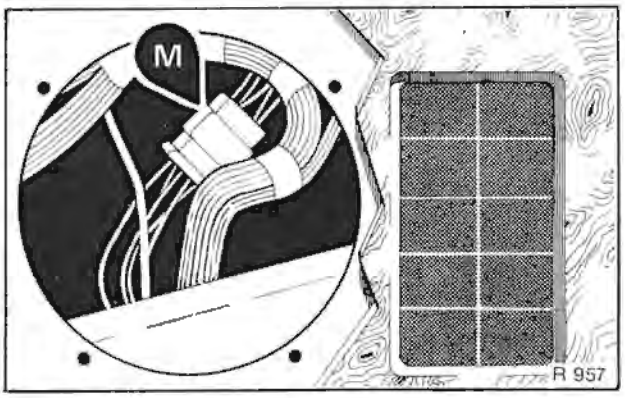

Components

1	Alternator
2	Ammeter shunt
3	Starter solenoid
4a	Ammeter
5	Ignition switch
6	Ignition warning lamp
7	Battery temperature sensors
8	Battery
9	Regulator
10	Left-hand boot earth
15	Right-hand valance earth
21	Choke thermal delay unit
120	Radio interference suppressor
B	Body sockets
M	Main distribution loom socket
T	Toeboard sockets

Charging system

Schematic wiring diagram

Sheet 1 of 2

Applicable to all cars prior to car serial numbers SRX 34573, LRG 34601, SBH 34775, CRH 34830 and DRX 33029.

Printed in England

© Rolls-Royce Motors Limited 1980

T.S.D. 4200 May 1980

© Rolls-Royce Motors Limited 1980
Printed in England

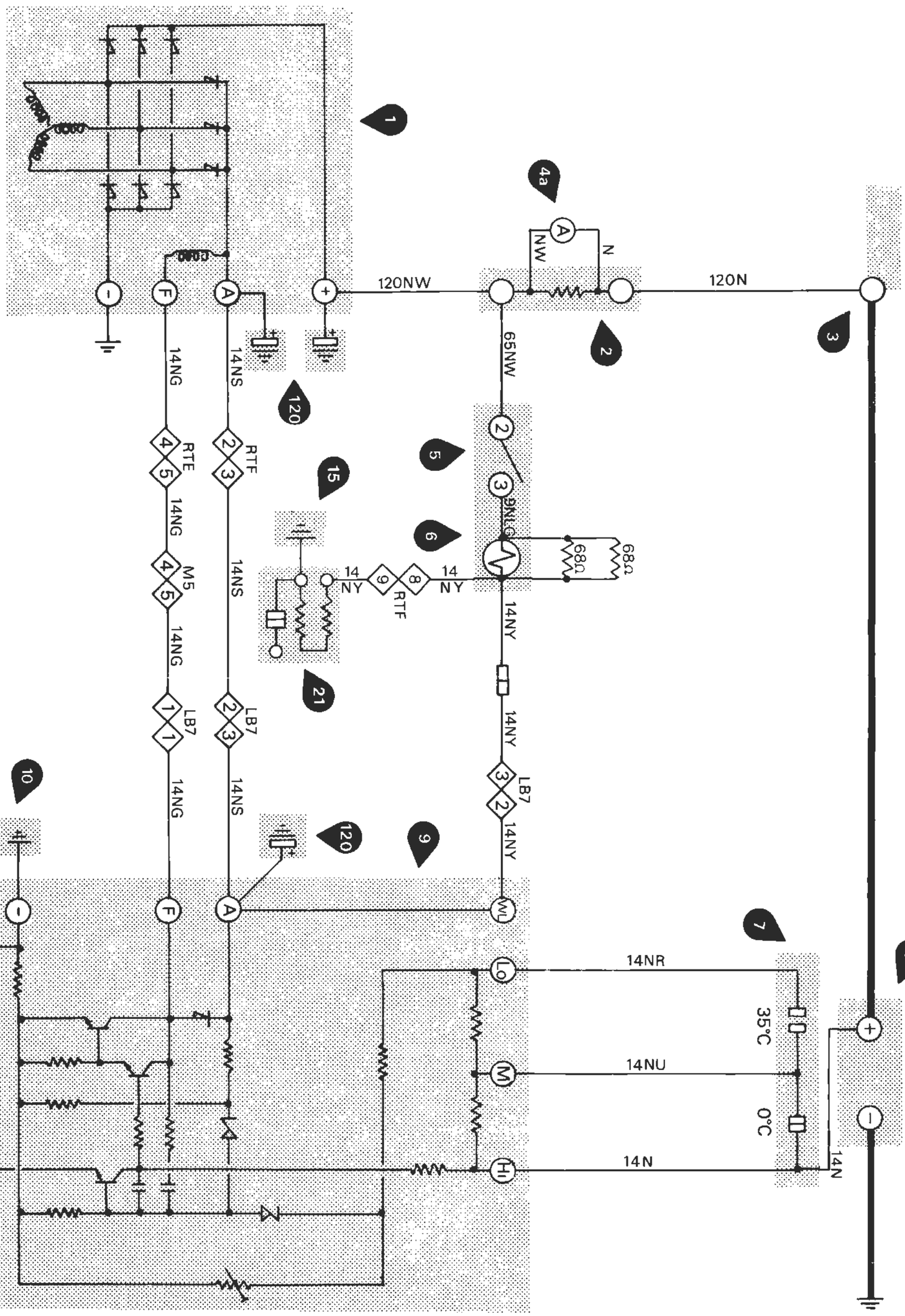

Charging system

Schematic wiring diagram

Sheet 2 of 2

Applicable to all cars from car serial numbers SRX 34573, LRG 34601, SBH 34775, CRH 34830 and DRX 33029.

Printed in England

© Rolls-Royce Motors Limited 1980

T.S.D. 4200 May 1980

© Rolls-Royce Motors Limited 1980
Printed in England

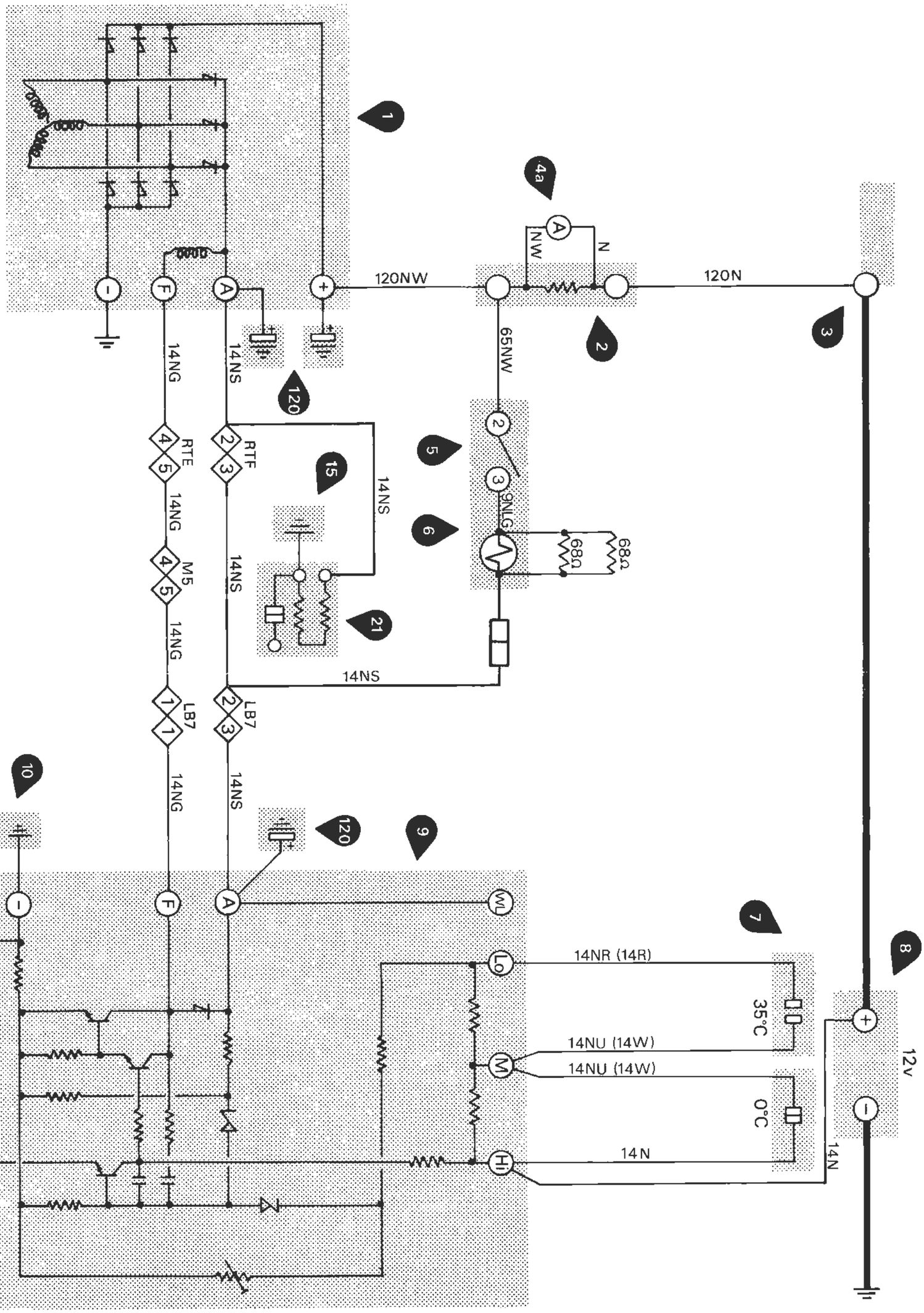

Section M2

Starting system
Contents

	Page
Introduction	M2 - 3
System operation	M2 - 3
Maintenance	M2 - 3
Starter motor	M2 - 3
Starter relay	M2 - 6
Column neutral start switch	M2 - 7
Gearbox neutral start switch	M2 - 7
Starter switch	M2 - 7
Starting system - Fault diagnosis	M2 - 9
Component location	M2 - 11
Wiring diagram	M2 - 13

Printed in England
© Rolls-Royce Motors Limited 1977
February 1977
T.S.D. 4200

Printed in England
© Rolls-Royce Motors Limited 1977
February 1977
T.S.D. 4200

Section M2

Starting system

Introduction

The ammeter and ammeter shunt are detailed in Section M4 - Warning lamp and Instruments, battery details are in Section M1 - Charging System.

System operation

The starter motor will not rotate unless the column neutral start switch and gearbox neutral start switch are in the 'Park' or 'Neutral' positions i.e. with switch contacts 'made'. However, the gear range selector should always be in the 'Park' position whenever the car is started. When the starter switch is operated, the coil of the starter relay is energised which closes contact C2 to C1. The starter solenoid becomes energised,engaging pinion with flywheel, closing the solenoid contacts thereby connecting the battery directly to the starter motor causing it to rotate

Maintenance

The starter motor will operate for long periods before requiring attention and should not need servicing except during major overhauls but a check should be made from time to time to ensure that the electrical connections are secure and clean.

Starter motor (see Fig. M6)

Starter motor - To remove

1. Place the car on a ramp or over a pit.
2. Disconnect the battery.
3. Remove the electrical connections from the motor.
4. Remove the setscrews which secure the starter motor,then from beneath the car, lower the starter motor between the engine and front side-frame member.
5. Remove and keep the packing piece(s) fitted between the starter motor flange and the crankcase end-face.

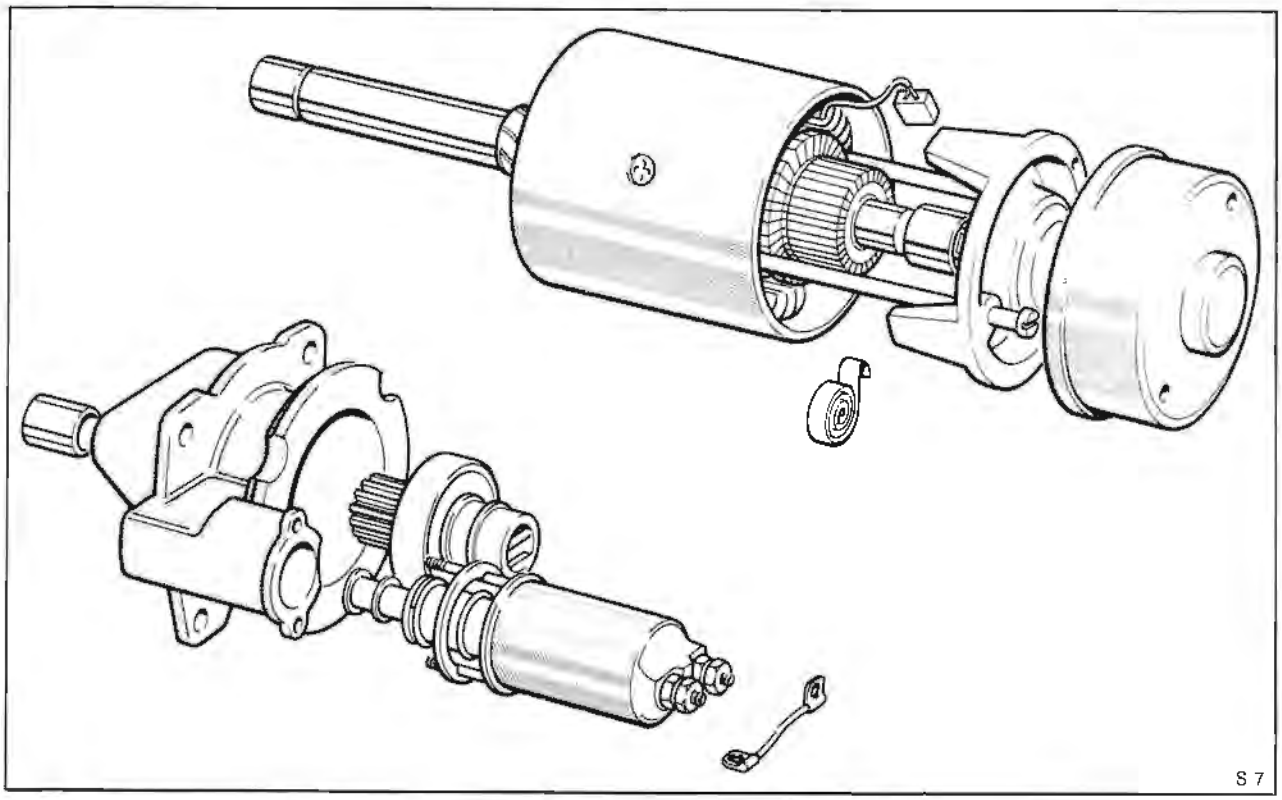

Fig. M6 Starter motor

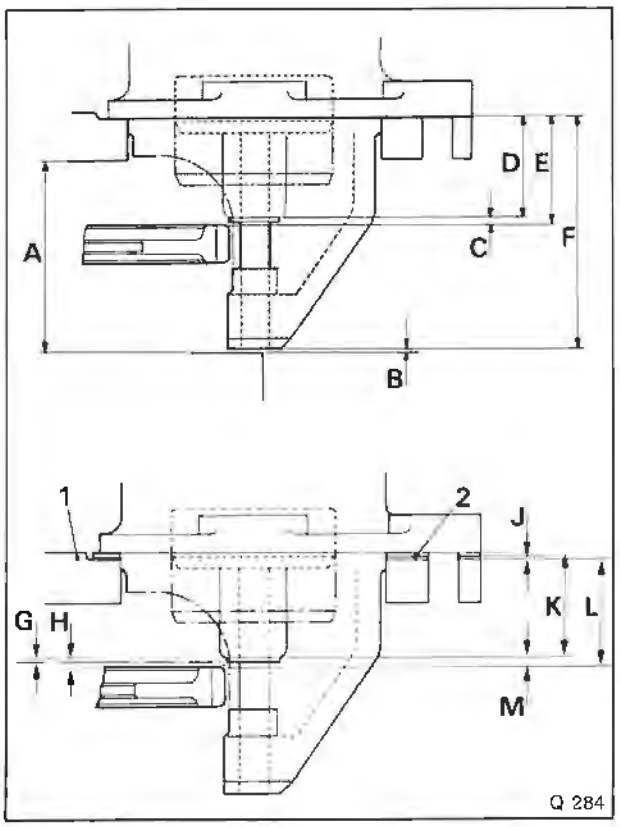

Fig. M7 Clearances between starter motor pinion and flywheel without packing pieces

A 6,640 cm. (2.614 in.)
B 5,84 mm. (0.23 in.) clearance between gearbox and starter motor
C 3,50 mm. (0.138 in.) minimum static clearance
6,375 mm. (0.251 in.) maximum static clearance
D 3,24 cm. to 3,46 cm. (1.277 in. to 1.362 in.)
E 3,614 cm. to 3,88 cm. (1.423 in. to 1.528 in.)
F 8,016 cm. max (3.156 in.)

With packing pieces

G 0,48 mm. (0.019 in.) minimum working clearance
H 2,74 mm. (0.108 in.) maximum flywheel float
J 0,84 mm. to 0,99 mm. (0.033 in. to 0.039 in.)
K 3,24 cm. to 3,46 cm. (1.277 in. to 1.362 in.)
L 3,61 cm. to 3,88 cm. (1.423 in. to 1.528 in.)
M Pinion to flywheel clearance (see table)
1 Rear face of crankcase
2 Packing pieces

Dimension M	Packing pieces
0,48 mm. (0.019 in.) minimum	2
0,58 mm. (0.023 in.) minimum	1
0,76 mm. (0.030 in.) minimum	None

Starter motor - To fit (see Fig. M7)

Important
Ensure that the existing packing pieces are fitted as they provide the correct clearance between the starter motor and flywheel. If a new starter motor is to be fitted or the original packing pieces have been mislaid proceed as follows:

1. Measure the distance from the mounting face on the crankcase to the edge of the flywheel. If this measurement is 3,706 cm. (1.459 in.) or less, two packing pieces should be fitted. If the measurement reads between 3,709 cm. and 3,807 cm. (1.460 in. and 1.499 in.), one packing piece should be fitted.
2. Packing pieces are not required when the measurement exceeds 3,810 cm. (1.500 in.).

Starter motor - To bench test

Light-running current - To measure (see Fig. M8)
1. Clamp the starter motor securely in a vice.
2. Using a fully charged 12 volt battery and ammeter, measure the light-running current which should be 100 amps (max) at 5000 to 6000 r.p.m.
3. If there is excessive sparking at the commutator, ensure that the brushes are clean and free to move in their boxes and that the spring pressure is correct (see Brush springs - To service).

Lock torque and current - To measure (see Fig. M9)
1. With the starter terminal voltage set to 7.2v, operate the flywheel braking device and note the meter readings which should compare with the following values:

Minimum torque	Maximum current
4 kgf.m. (29 lbf.ft.)	940 amps

Pinion movement - To set (see Fig. M10)
1. Remove the flexible copper link connecting the yoke terminal and 'STA' terminal on the solenoid, connect 'STA' terminal to earth.
2. Connect a 6 volt supply to the small unmarked setscrew terminal and earth on the solenoid.

Note
This will energise the series and shunt windings in the solenoid. The period of energising should be as brief as possible to prevent overheating of the series winding.

3. Energise the solenoid to bring the drive assembly into the engaged position. Measure the distance between the pinion and thrust collar on the armature shaft extension. The measurement must be taken with the pinion pressed lightly towards the armature to take up any slack in the linkage. The correct setting for this distance should be between 3,404 mm. and 3,662 mm. (0.134 in. and 0.144 in.)
4. To adjust the setting, slacken the eccentric pivot pin lock-nut and turn the screw until the required setting is obtained. The arc of adjustment is 180° therefore ensure that the head of the arrow marked on the pivot pin is set only between the arrowed ends of the arc scribed on the drive-end bracket casting. After setting, ensure that the eccentric pivot pin lock-nut is tightened.
5. Recheck the setting.

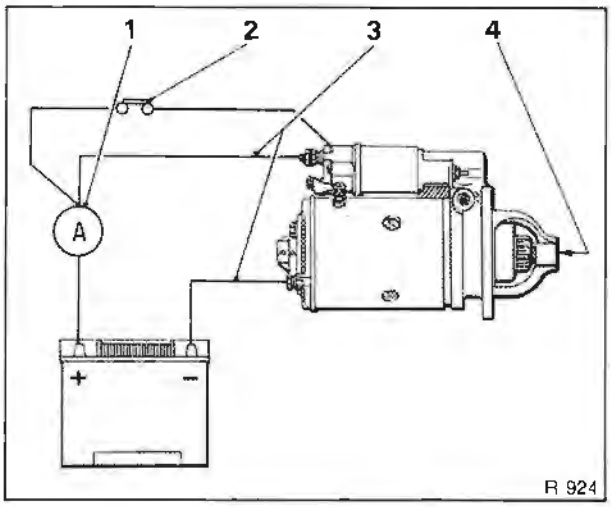

Fig. M8 Measuring light-running current
1 Ammeter 0-100 amps
2 Switch
3 Heavy-duty cables
4 Apply tachometer here

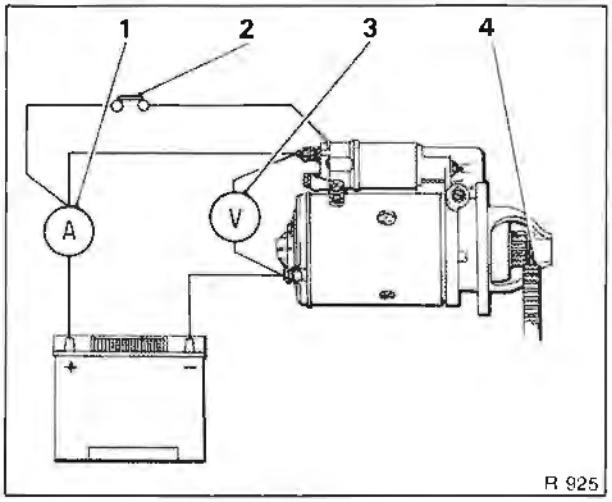

Fig. M9 Measuring lock torque and current
1 Ammeter 0-1000 amps
2 Switch
3 Voltmeter 0-20 volts
4 Flywheel brake

Solenoid contacts - To check

When carrying out the following checks, the pinion movement should have been correctly set.

1. Remove the copper link connecting solenoid terminal 'STA' with the starter motor terminal and connect 'STA' to earth.

2. Connect a 12vdc supply between the small unmarked terminal and earth.

3. Connect a 12 volt 15 watt test lamp across the solenoid main terminal and small terminal.

4. Insert a stop in the end-drive bracket to restrict the pinion travel to that of the normal out-of-mesh clearance. An open-ended spanner can be used with the jaws embracing the armature shaft extension.

5. Close the switch to energise the solenoid.

6. The solenoid contacts should close and remain fully closed, as indicated by the test lamp being lit.

7. Switch off and remove the stop.

8. Switch on and hold the pinion assembly in the fully engaged position.

9. Switch off and observe the test lamp, the solenoid contacts should remain open as indicated by the test lamp being extinguished.

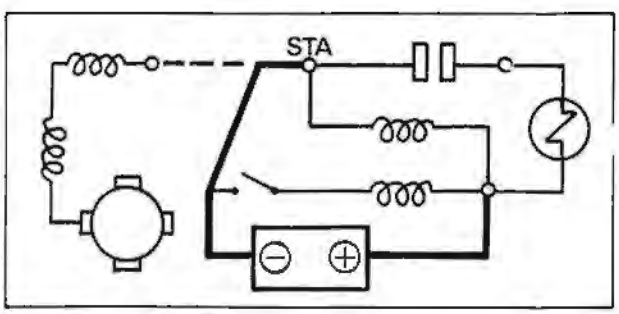

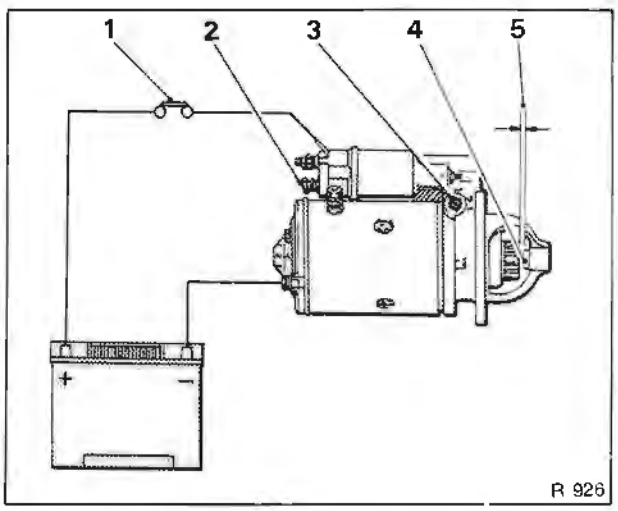

Fig. M10 Setting pinion movement
1 Switch
2 Copper link removed from STA
3 Eccentric pivot pin
4 Thrust washer
5 Pinion clearance 3,404 to 3,658 mm. (0.134 to 0.144 in.)

Brushgear and commutator - To service

1. Remove the starter motor and clean it prior to removing the die-cast alloy cover and sealing ring.

2. Remove the two nuts which secure the die-cast cover and sealing ring to the starter motor; remove the cover.

3. Ensure that the brushes are of adequate length, they must be renewed if they are worn to 8 mm. ($\frac{5}{16}$ in.).

Printed in England
© Rolls-Royce Motors Limited 1977

4. Check the commutator for signs of 'pitting' and 'burning'. If necessary, clean with a cloth moistened with petrol. If this is unsatisfactory, the armature must be removed from the starter motor. Verify that the bearing diameters are true to centre then set up the armature between the centres of a lathe and polish the commutator with fine glass paper; **on no account must emery cloth or similar abrasive be used.**

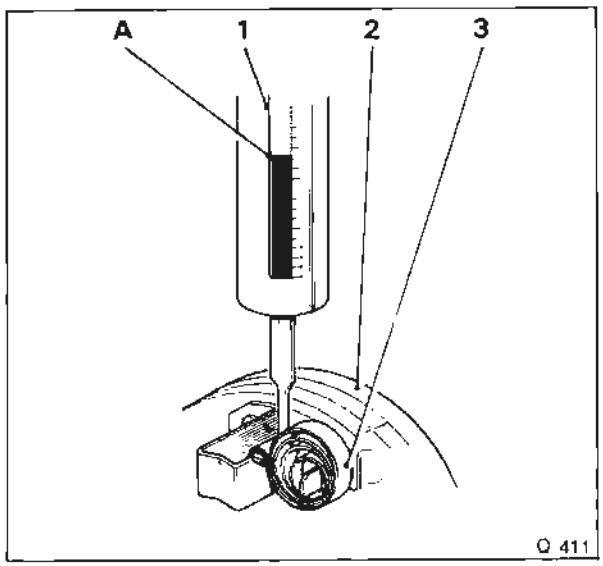

Fig. M11 Checking brush spring pressure
1 Commutator end bracket
2 Spring gauge
3 Anchor post
A Pressure reading

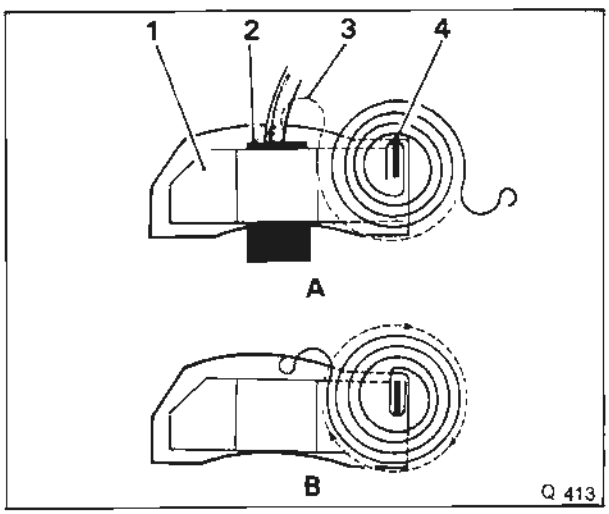

Fig. M12 Correct fitting of brush spring
1 Brush box
2 Brush
3 Normal working position of spring
4 Anchor post
A Correct (spring-tension half-turn)
B Incorrect (spring-tension full-turn)

5. If the commutator needs to be skimmed, the minimum diameter to which it may be reduced is 39 mm. (1.545 in.). After skimming, the commutator surface should be polished with fine glass paper.
6. The insulation segments must not be undercut.

Brushes - To remove
1. There are four brushes in the brush box, two are connected to the brush box and two are connected to the free ends of the field coils. Carefully prise open the field connections with a screwdriver and use a soldering iron to remove the solder from the connections.
2. Remove the brushes.

Brushes - To fit
1. When fitting a new brush, ensure that it is free in its brush-box.
2. New brushes are pre-formed and do not require bedding-in.

Brush springs - To service (see Fig. M11 and M12)
1. Measure the brush-spring pressure using a pull-type spring gauge and without the brush in the brush box. The spring pressure recorded by spring gauge at the moment the spring pressure is relieved from the brush box should be 1,1 kgf. (42 ozf.) minimum.
2. If new brush springs are required ensure that they are fitted correctly. If the springs are fitted incorrectly there will be excessive pressure on the brushes resulting in premature brush wear and damage to the commutator.

Brushgear insulation - To check (see Fig. M13)
1. Test the brushgear using a 110 volt a.c. 15 watt test lamp connected between each of the two insulated brushboxes and a clean unpainted part of the bracket in turn. The lamp must not light.

Field coils - To test (see Fig. M14)
1. Inspect the inside of the yoke for obvious signs of a fault.
2. Check the tightness of the pole-shoes and inspect the field coils.
3. Check field coil continuity by inspecting the interconnections between the field coils and check that the terminal and brush flexible-joints are satisfactory.
4. Ensure that the brushes are not contacting the yoke, then connect a 110 volt a.c. 15 watt test lamp between the field coil terminal and the edge of the yoke. The lamp should not light.

Starter relay

The starter relay is a Lucas Model 22RA which can be tested as follows:
1. Disconnect all cables from the relay, noting the cable colours to ensure correct fitting.
2. Connect the relay winding W1 and connection C2 to the negative side of a 12v battery.

3. Connect a test lamp between C1 and the positive side of a battery, the lamp should remain extinguished.
4. Connect W2 to the positive side of battery and ensure that the test lamp is lit.

Column neutral start switch
The column neutral start switch prevents the engine from being started unless the gear selector is in 'Neutral' or 'Park'. It is fitted in the cowl of the steering column.

Gearbox neutral start switch
The gearbox neutral start switch prevents the engine from being started unless the gearbox is in the 'Neutral' or 'Park' positions. It is part of the gearchange actuator and the continuity of the switch can be tested by connecting a test lamp between earth and pin K of the actuator plug and connect pin S of the plug to a 12v supply. The lamp should be lit with 'Neutral' or 'Park' selected and extinguished when any other gear range is selected.

Starter switch (Switchbox) - To remove (see Fig. M15)
1. Disconnect the battery.
2. Remove the driver's side facia trim panel (see Chapter S).
3. Unscrew and remove the screws securing the switchbox to the panel.
4. Disconnect the plugs and sockets and remove the switchbox.

Note
The illustration shows a switchbox as fitted to Rolls-Royce Camargue.

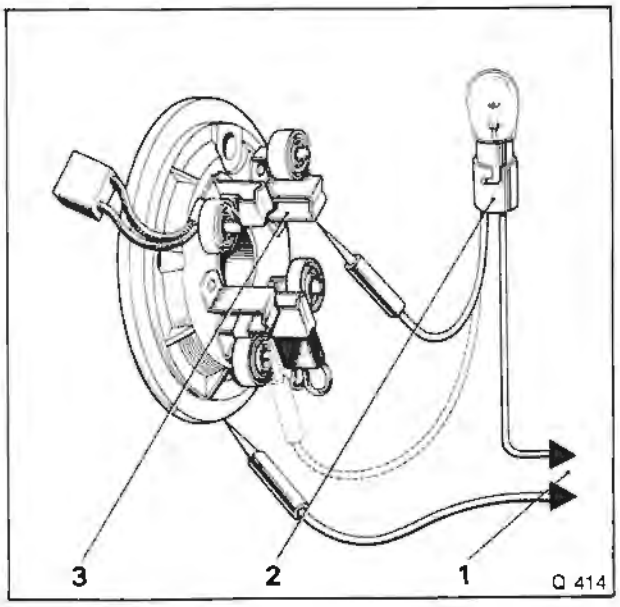

Fig. M13 Checking brushgear insulation
1 110 volt AC mains
2 15 watt lamp
3 Insulated brush box

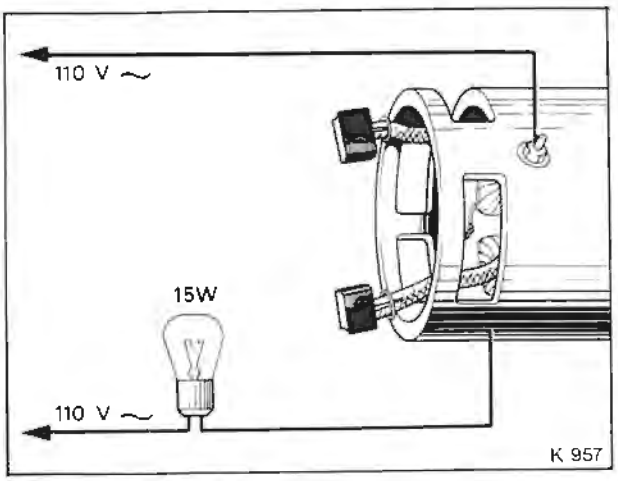

Fig. M14 Checking field coil insulation

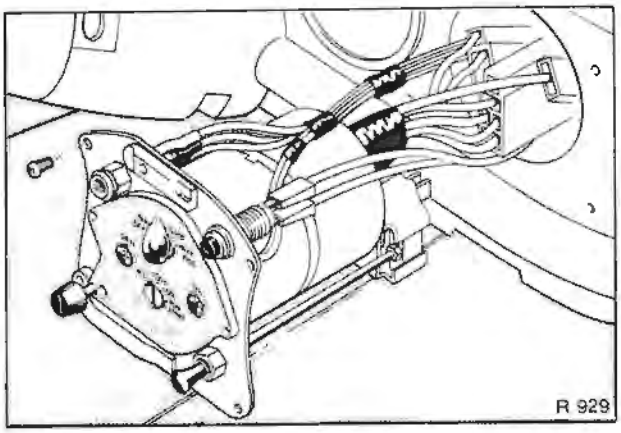

Fig. M15 Switchbox

Printed in England
© Rolls-Royce Motors Limited 1977
February 1977
T.S.D. 4200

Section M2

Starting system Fault diagnosis

Malfunction	Possible cause	Action
Cranking speed too low	Battery in low state of charge	Measure specific gravity of all battery cells
	Poor electrical connections in main starter circuit	Inspect the battery terminals, starter terminals, battery earth, chassis earth and engine earthing strap
	Faulty starter motor	Remove the motor for examination
	Incorrect grade of engine oil	This would normally only be apparent under cold start conditions i.e. below freezing point
	Tight engine	The steady cranking current with a fully charged battery and known good starter motor at an ambient temperature of 20° C should not exceed 250 amperes. A figure greatly in excess indicates a tight engine
Starter motor fails to operate when ignition is turned to START position	Flat battery or poor electrical connections	Switch on vehicle exterior lamps and observe whether lamps dim when ignition key is turned to START position
	Gear range selector lever not in 'P' or 'N' position	Rectify
	Number 2 fuse blown	Substitute fuse. If new fuse 'blows', isolate the various circuits to isolate the short e.g. disconnect right-hand toeboard socket to isolate ignition weakener cut-off valve and choke solenoid
	Faulty starter relay, column neutral start switch, switchbox, gearchange actuator neutral start switch	Check connections and items listed. Disconnect the L.T. lead from ignition coil negative. With the ignition key held in START position and using a test lamp, check the supply through each component: If the fault is located in the column neutral start switch or gearchange actuator neutral start switch, check the adjustment before changing the unit.
	Open circuit in switchbox, starter relay winding and earth	Check earth connections at right-hand valance earth. Check connections at items listed
Starter relay operates but starter motor inoperative	Battery in low state of charge.	Measure specific gravity of battery
	Poor connections at starter and starter solenoid supply circuit	Inspect the battery terminals, starter terminals, battery earth, chassis earth and engine earthing strap. Check 28N cable at shunt, 28N and 28NB cables at starter relay and 28NB cable at starter solenoid

Printed in England
© Rolls-Royce Motors Limited 1977

Malfunction	Possible cause	Action
	Faulty starter relay	Connect a test lamp across terminals C1 and C2 on the relay. The test lamp should normally be illuminated and be extinguished when the relay is operated
	Faulty starter motor	Remove for examination
Starter solenoid 'chatters' when operating the ignition key in the START position	Flat battery	Switch on vehicle exterior lamps and observe whether lamps dim when ignition key is turned to START position.
	Poor electrical connection in main starter and solenoid supply circuit	Inspect the battery terminals, battery earth, starter terminals, chassis earth, and engine earth strap. Check also 28N cable between shunt and starter relay and the 28NB cable between starter relay and starter solenoid
	Faulty solenoid	Remove starter motor and fit new solenoid
Starter continues to crank engine with ignition key in OFF position	Incorrect starter solenoid adjustment	Remove starter motor and adjust solenoid, bench test before fitting
	Faulty solenoid	Remove starter motor end fit new solenoid

Starting system

Component location
Fig. M16

Printed in England
© Rolls-Royce Motors Limited 1977
February 1977
T.S.D. 4200

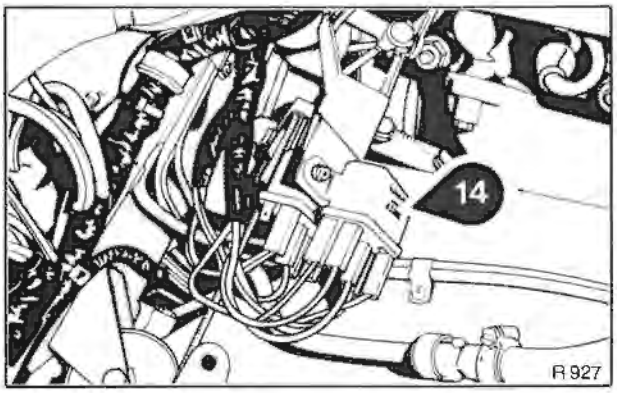

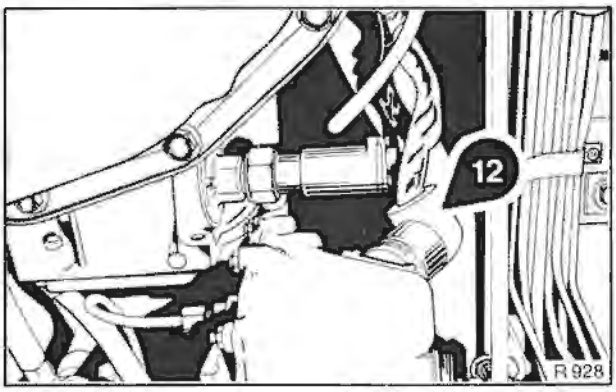

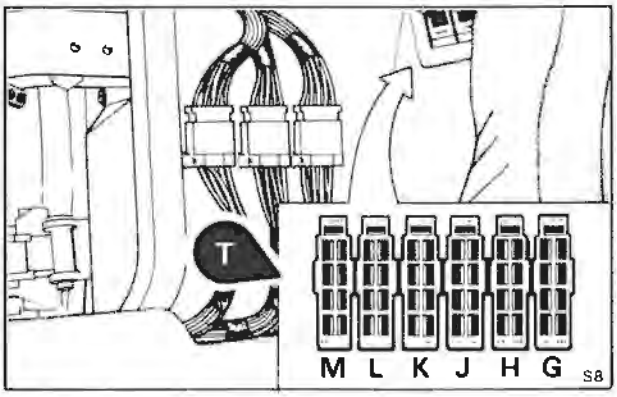

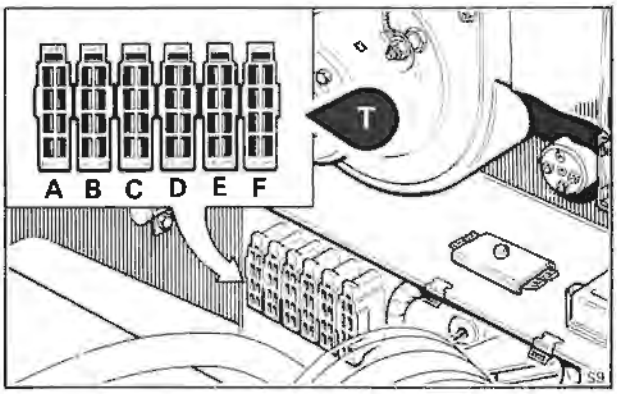

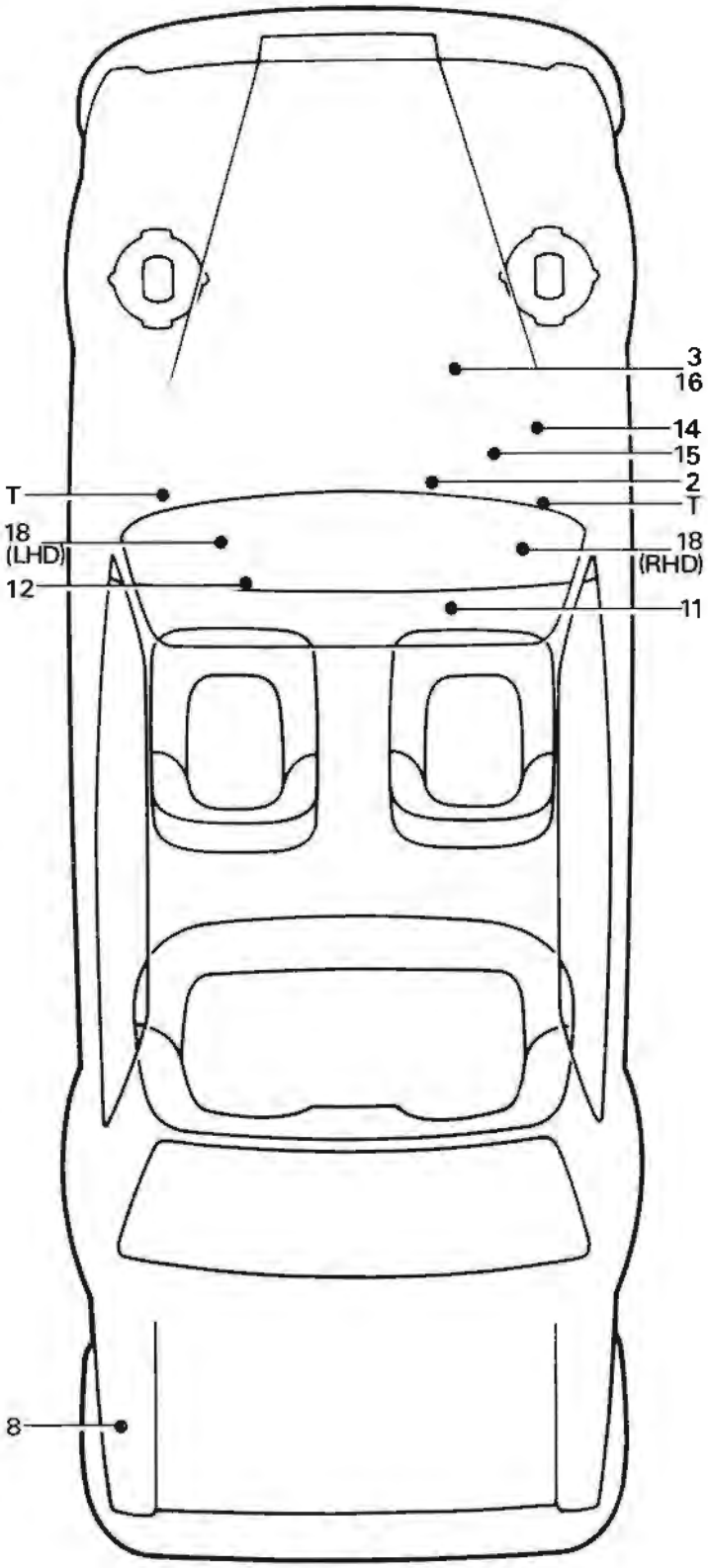

Components

2	Ammeter shunt
3	Starter solenoid
8	Battery
11	Column neutral start switch
12	Gearbox neutral start switch
13	Starter switch
14	Starter relay
15	Right-hand valance earth
16	Starter motor
17	Fuseboard A
18	Petrol pumps relay
T	Toeboard sockets

Starting system

Schematic wiring diagram

Fig. M17

Printed in England

© Rolls-Royce Motors Limited 1977

February 1977

T.S.D. 4200

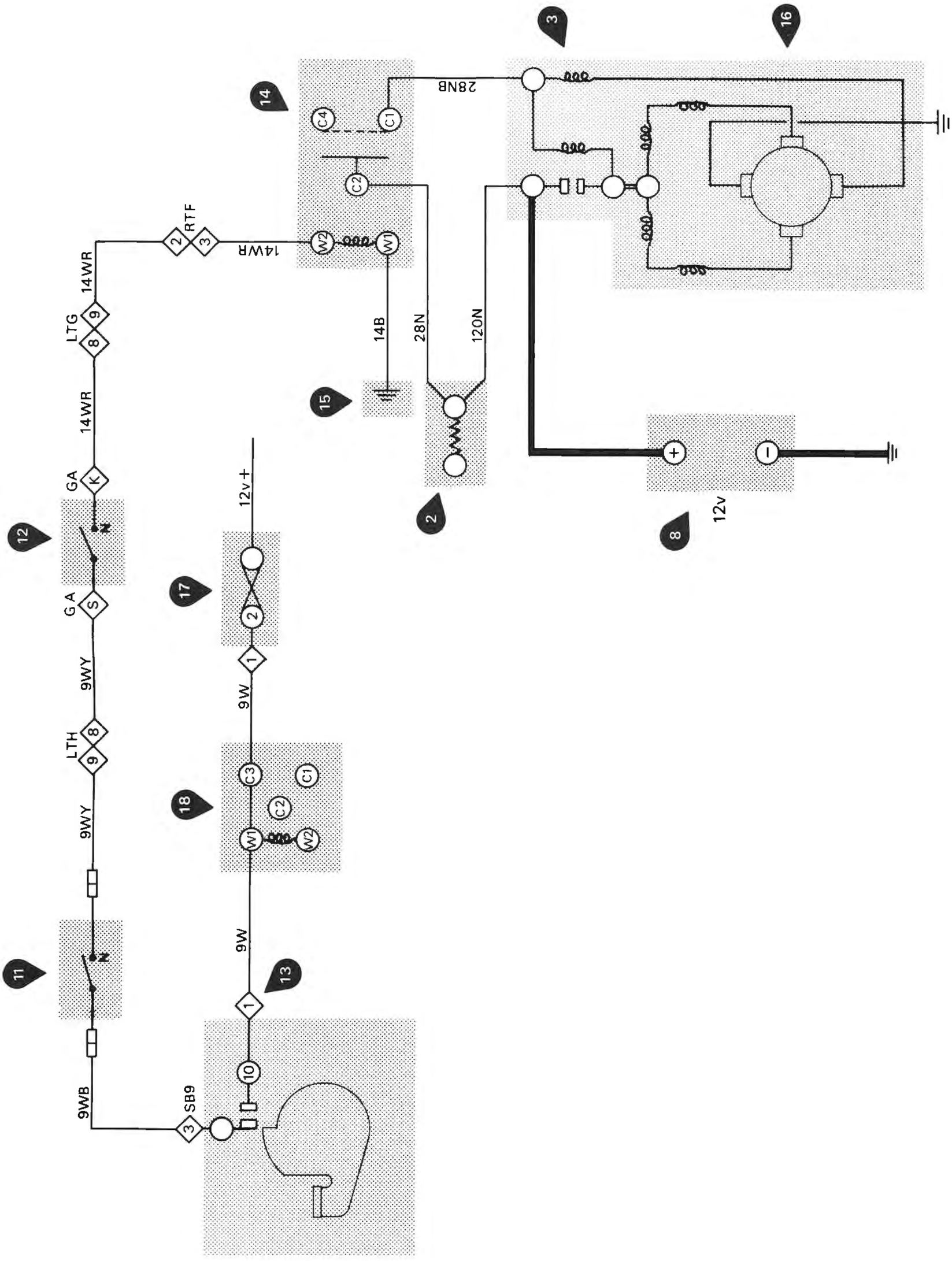

© Rolls-Royce Motors Limited 1977

Section M3

Ignition system
Contents

Cars prior to car serial numbers

Silver Shadow II - SRX 34573
Silver Wraith II - LRG 34601
Bentley T2 - SBH 34775
Corniche Saloon - CRH 34830
Corniche Convertible - DRX 33029

	Page
Introduction	M3 - 3
Ignition distributor	M3 - 3
Ballast resistance unit	M3 - 4
Sparking plugs	M3 - 4
Choke thermal delay unit	M3 - 4
Choke-on-start relay	M3 - 5
Choke solenoid	M3 - 5
Petrol pumps relay	M3 - 5
Fault diagnosis	M3 - 7
Component location	M3 - 9
Wiring diagram	M3 - 11

Supplement No. 1

For cars from car serial numbers

Silver Shadow II - SRX 34573
Silver Wraith II - LRG 34601
Bentley T2 - SBH 34775
Corniche Saloon - CRH 34830
Corniche Convertible - DRX 33029

Supplement No.2

Ignition timing data

Printed in England

© Rolls-Royce Motors Limited 1979

November 1979

TSD 4200

Section M3

Ignition system

Introduction

The wiring diagram shows exhaust gas recirculation (EGR) and fuel weakening components, when these are not fitted, the cables are taped back. The wiring diagram also shows the wiring for left-hand and right-hand drive cars.

Details of EGR solenoid, EGR thermostat, full throttle switch, throttle weakener solenoid, throttle weakener switch and anti-diesel solenoid can be found in Chapter U. Details of the kick-down switch and kick-down solenoid (detent) can be found in Chapter T. Details of the oil pressure switch and ammeter shunt can be found in Section 4 of this chapter. The starter motor, starter relay, switchbox and neutral start switches are dealt with in Section 2.

Ignition distributor (see Fig. M18)

The ignition distributor fitted is a Lucas Opus Mk.2 'High energy' with 5EM module in which an oscillator pick-up and control unit replace the conventional contact breaker. A drum with eight ferrite rods (one per cylinder) moulded into the outer edge is mounted on the distributor drive-shaft. As the drum rotates, each time one of the ferrite rods passes the oscillator pick-up, a voltage is created which is then amplified and used to switch off the normally conducting power transistor which is connected to the primary coil winding of the ignition coil, thereby inducing a high voltage in the secondary winding. This is then distributed to the sparking plugs in the conventional manner.

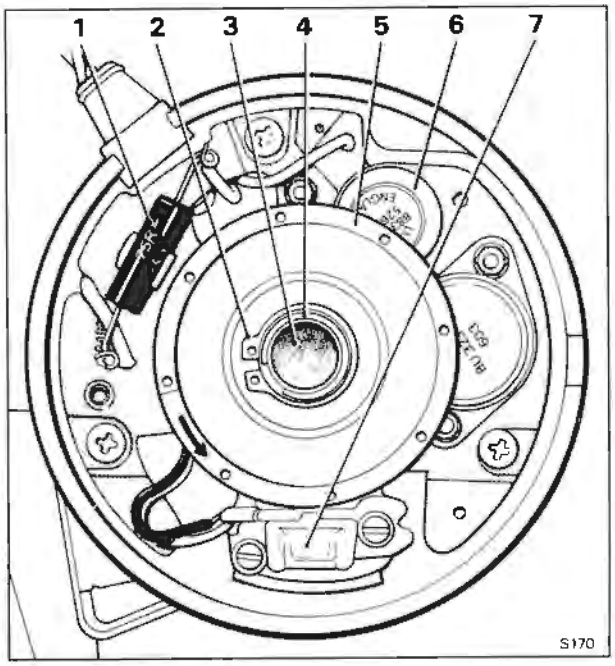

Fig. M18 Ignition distributor (5EM module)

1 Resistor
2 Circlip
3 Lubrication pad
4 Rotor carrier assembly
5 Timing rotor
6 Control unit
7 Pick-up module

Ignition distributor - To remove

1. Disconnect the battery.
2. Remove the gear-range thermal cut-out from the fuseboard.
3. Remove the distributor cap.
4. Rotate the crankshaft in the normal direction of rotation until the rotor arm is adjacent to 'A1' plug position (i.e. 'A1' piston at approximately T.D.C. on the firing stroke).
5. Disconnect the plug connecting the distributor to the ballast resistor and also remove the leads from the ignition coil. Note the colours of the sleeve markers to facilitate fitting.
6. Disconnect the hose from the distributor advance capsule.
7. Unscrew the two nuts securing the distributor clamp to the pedestal. **Do not slacken the distributor clamp screw.**
8. Withdraw the distributor.

Ignition distributor - To fit

Reverse the procedure for removal, if the crankshaft was rotated while the distributor was removed, the correct position for ignition timing can be obtained as follows:

1. Remove 'A' bank rocker cover from the engine.
2. Rotate the crankshaft by hand at least one full turn in the normal direction of rotation until the 'A1' inlet valve has opened and just closed.
3. Further rotate the crankshaft in the correct direction of rotation until the flywheel is at T.D.C.
4. Fit the 'A' bank rocker cover.
5. Renew the seal at the base of the distributor housing.
6. Fit the distributor with the rotor arm adjacent to the 'A1' plug position and reconnect the hose to the advance capsule.
7. Check the dwell angle and ignition timing.

Printed in England
© Rolls-Royce Motors Limited 1977
February 1977
T.S.D. 4200

Ignition timing - To set
For cars fitted with emission control components, refer to Chapter U, for all other cars proceed as follows:
1. Run the engine until normal operating temperature is reached and choke fast-idle is off.
2. Stop the engine.
3. Connect a stroboscope and impulse tachometer in accordance with manufacturers instructions.
4. Disconnect the hose from distributor advance capsule and blank off the hose.
5. Start the engine and set the speed to 1300 r.p.m. using the idle stop screw. The speed should be set by decreasing to 1300 r.p.m. from a higher speed.
6. Direct the stroboscope light onto the crankshaft damper and timing pointer (refer to fig. M19). Slacken the distributor clamp bolt and adjust the distributor to set the timing at 25° B.T.D.C.



Fig. M19 Ignition timing pointer

7. Tighten the clamp bolt and verify that the timing is still at 25° B.T.D.C.
8. Reset the engine speed to 650 r.p.m. using the idle stop screw. Check that the ignition timing is approximately 11° B.T.D.C. Stop the engine.
9. Reconnect the hose to the distributor advance capsule.

Ignition coil
The ignition coil fitted to cars destined for North America, Japan and Australia is a Lucas 23C12, all other cars have a Lucas 22C12 coil.

Ignition coil - To remove and fit
1. Disconnect the battery.
2. Disconnect the leads from the coil.
3. Remove the two setscrews and spacers securing the coil.
4. Remove the coil.
5. When fitting the coil, ensure that the low tension and capacitor leads are fitted correctly. The capacitor is connected to the + terminal.

Ballast resistance unit
The ballast resistance unit is an encapsulated assembly fixed in an aluminium heatsink and is attached to the front face of the engine near the distributor. If the unit develops a fault, it cannot be repaired therefore it must be replaced.

The resistance unit ensures that a satisfactory voltage is applied to the primary winding of the coil at all times, particularly during the period of starter motor operation when the battery terminal voltage is temporarily below normal. The tachometer test connection is connected to one of the 'Lucar' connections.

Sparking plugs - To clean and check
1. Remove the sparking plugs.
2. Thoroughly clean in a sparking plug cleaning machine.
3. Clean off all surplus abrasive material from the electrodes and threads with compressed air.
4. Set the plug gap to between 0,74 mm. and 0,77 mm. (0.029 in. and 0.031 in.)

For cars destined for North America, Japan and Australia, refer to Chapter U.

Sparking plugs - To fit
1. Ensure that the threads are clean then lubricate with a small amount of 'Graphoge r' grease.
2. Ensure that a steel washer is fitted to each plug.
3. Fit and tighten the plugs to between 1,79 kgf.m. and 2,35 kgf.m. (13 lbf.ft. and 17 lbf.ft.).

Choke thermal delay unit
Used in conjunction with the choke solenoid to hold the choke flap closed when the engine ambient temperature is below 0° C. The length of time that the contacts are made depends on the ambient temperature and is controlled by the two resistance/heaters in the unit, the colder the temperature, the longer the contacts are 'made'.

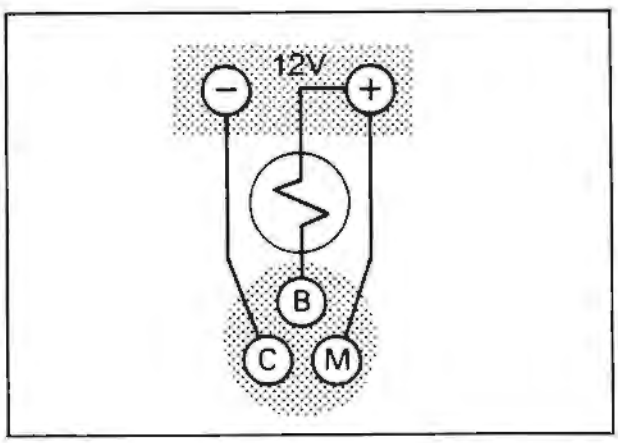

Fig. M20 Choke thermal delay test circuit

Choke thermal delay unit - To test (see Fig. M20)
1. Disconnect the battery.
2. Remove the unit from the car and place it in a refrigerator for 5 minutes with the temperature below freezing point.
3. While the unit is still cold (below freezing point) connect terminal C to the negative side of a 12v battery and connect terminal B to a 12v test lamp, connect the other test lamp lead to the positive terminal of the battery. The lamp should glow.
4. Connect terminal M of the unit to the positive terminal of the battery and verify that the lamp is extinguished within one minute.

Choke-on-start relay

The choke-on-start relay coil is energised whenever the starter switch is operated and both neutral start switches are in the neutral or park position (i.e. when the engine is cranking). Its function is to provide an earth path for the choke solenoid during engine cranking thereby holding the choke flap closed.

Relay - To test (see Fig. M21)
1. Disconnect the battery.
2. Remove the 14WR cable from terminal W2 and the 9WLG cables from terminal C1. Insulate the cables.
3. Connect a test lamp to the relay as shown in the following diagram the lamp should be extinguished.
4. Connect W2 to the positive terminal of the battery, the lamp should glow.

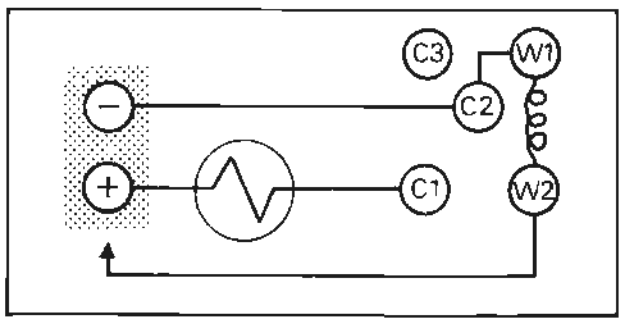

Fig. M21 Choke-on-start relay test circuit

Choke solenoid

The choke solenoid operates the choke flap and it is energised whenever the engine is cranking or the choke thermal delay switch is closed i.e. when the engine ambient temperature is below 0 °C. The choke flap is closed when the solenoid is energised.

Solenoid - To test
1. Switch on the ignition.
2. Disconnect the 9WLG cable 'Lucar' connector at the solenoid.
3. Connect a wire from the solenoid 'Lucar' connector to earth and ensure that the choke flap closes.
4. Switch off the ignition and reconnect the 9WLG cable.

Petrol pumps relay

The coil of the relay is earthed via the oil pressure switch which effectively prevents the petrol pumps from operating if the ignition is switched on and the oil pressure is low (i.e. switch is made).

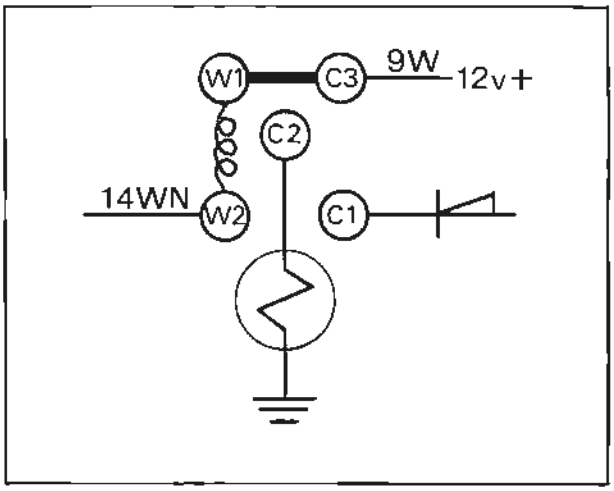

Fig. M22 Petrol pumps relay test circuit

Relay - To test (see Fig. M22)
1. Disconnect the 9WK cable from C2 and connect a 12v test lamp between C2 and earth.
2. Switch on the ignition and use another test lamp or meter to verify that there is a live feed at C3. The test lamp connected to C2 should remain extinguished.
3. Disconnect the 14WN cable from W2, the test lamp should glow.
4. Switch off the ignition.

Printed in England
© Rolls-Royce Motors Limited 1977
February 1977
T.S.D. 4200

Section M3

Ignition system
Fault diagnosis

Printed in England

© Rolls-Royce Motors Limited 1979

T.S.D. 4200 July 1979

Printed in England

© Rolls-Royce Motors Limited 1979

T.S.D. 4200 July 1979

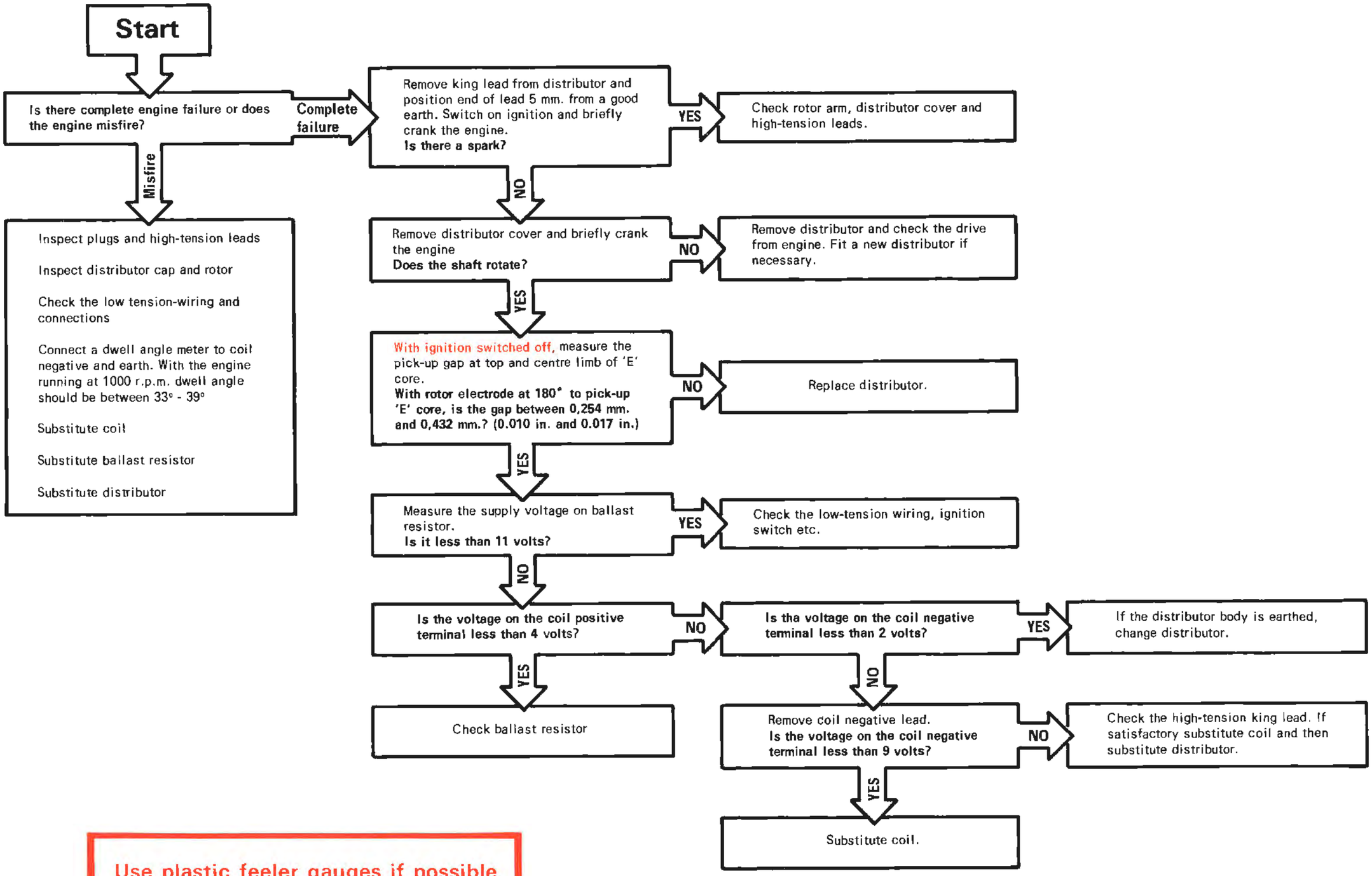

Use plastic feeler gauges if possible and do not force them into the gap

Ignition system

Component location
Fig. M23

Printed in England
© Rolls-Royce Motors Limited 1977

February 1977
T.S.D. 4200

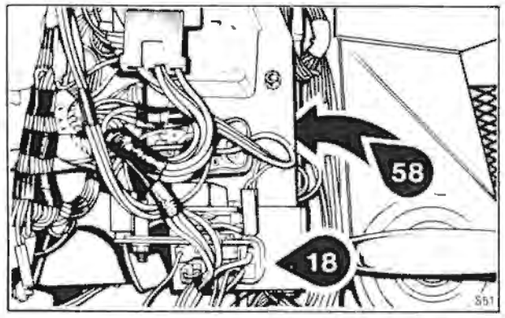

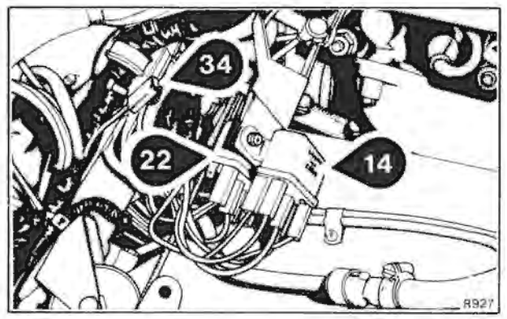

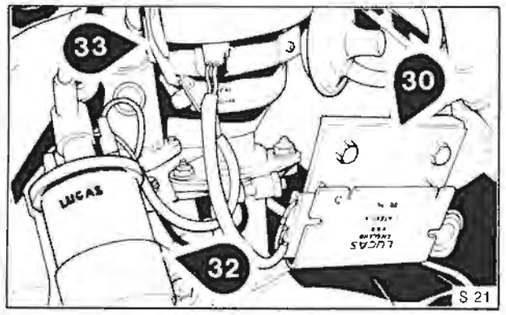

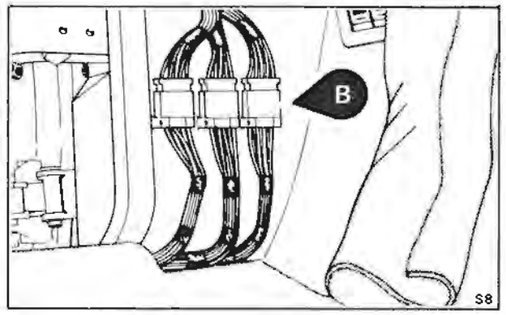

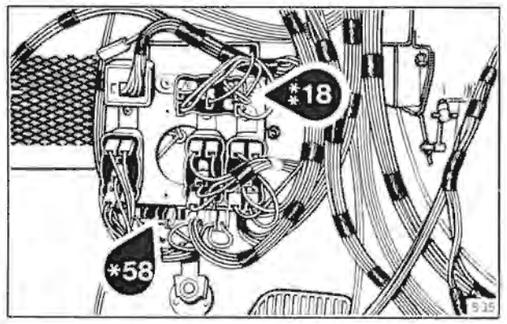

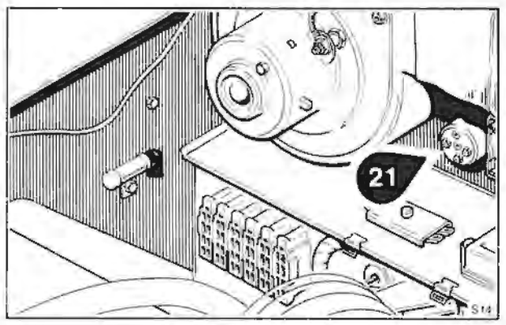

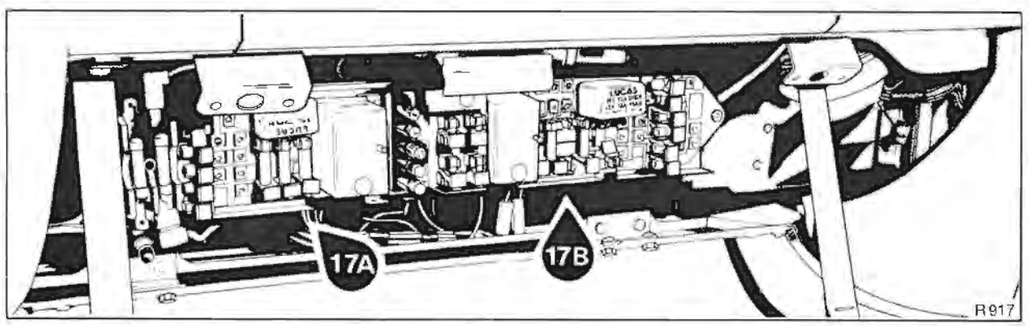

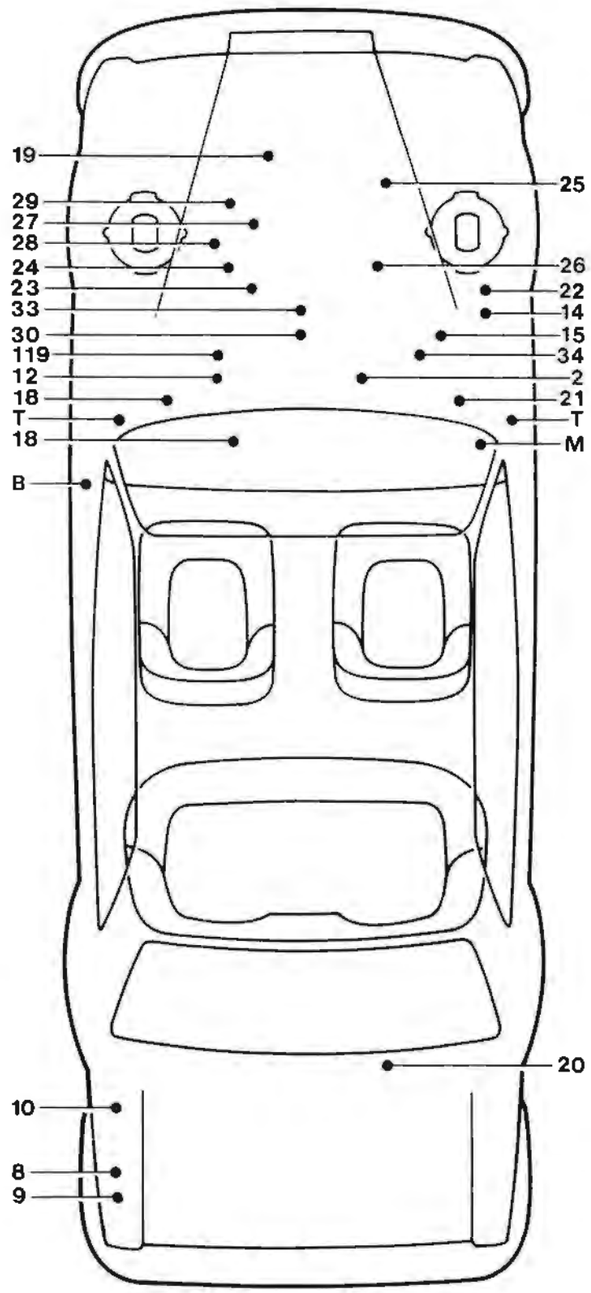

Components

2 Ammeter shunt
3 Starter solenoid
5 Ignition switch
6 Ignition warning lamp
8 Battery
9 Regulator
10 Left-hand boot earth
11 Column neutral start switch
12 Gearbox neutral start switch
13 Starter switch
14 Starter relay
15 Right-hand valance earth
16 Starter motor
17 Fuseboard 'A'
18 Petrol pumps relay
19 Oil pressure switch
20 Petrol pumps
21 Choke thermal delay unit
22 Choke-on-start relay
23 Choke solenoid
24 Exhaust gas recirculation solenoid
25 Exhaust gas recirculation thermostat
26 Full throttle switch
27 Throttle weakener thermostat
28 Throttle weakener solenoid
29 Anti-diesel solenoid
30 Ballast resistor
31 Spark plugs
32 Ignition coil
33 Ignition distributor
34 Tacho test connector
58 Diode block
118 Kick-down switch
119 Kick-down solenoid (detent)
120 Radio interference suppressor

T Toeboard socket
B Body socket
M Main distribution loom socket

* All left-hand drive
** Left-hand drive - not North America

Ignition system

Schematic wiring diagram
Fig. M24

S 15
Printed in England
© Rolls-Royce Motors Limited 1977
April 1977
T.S.D. 4200

© Rolls-Royce Motors Limited 1977
Printed in England

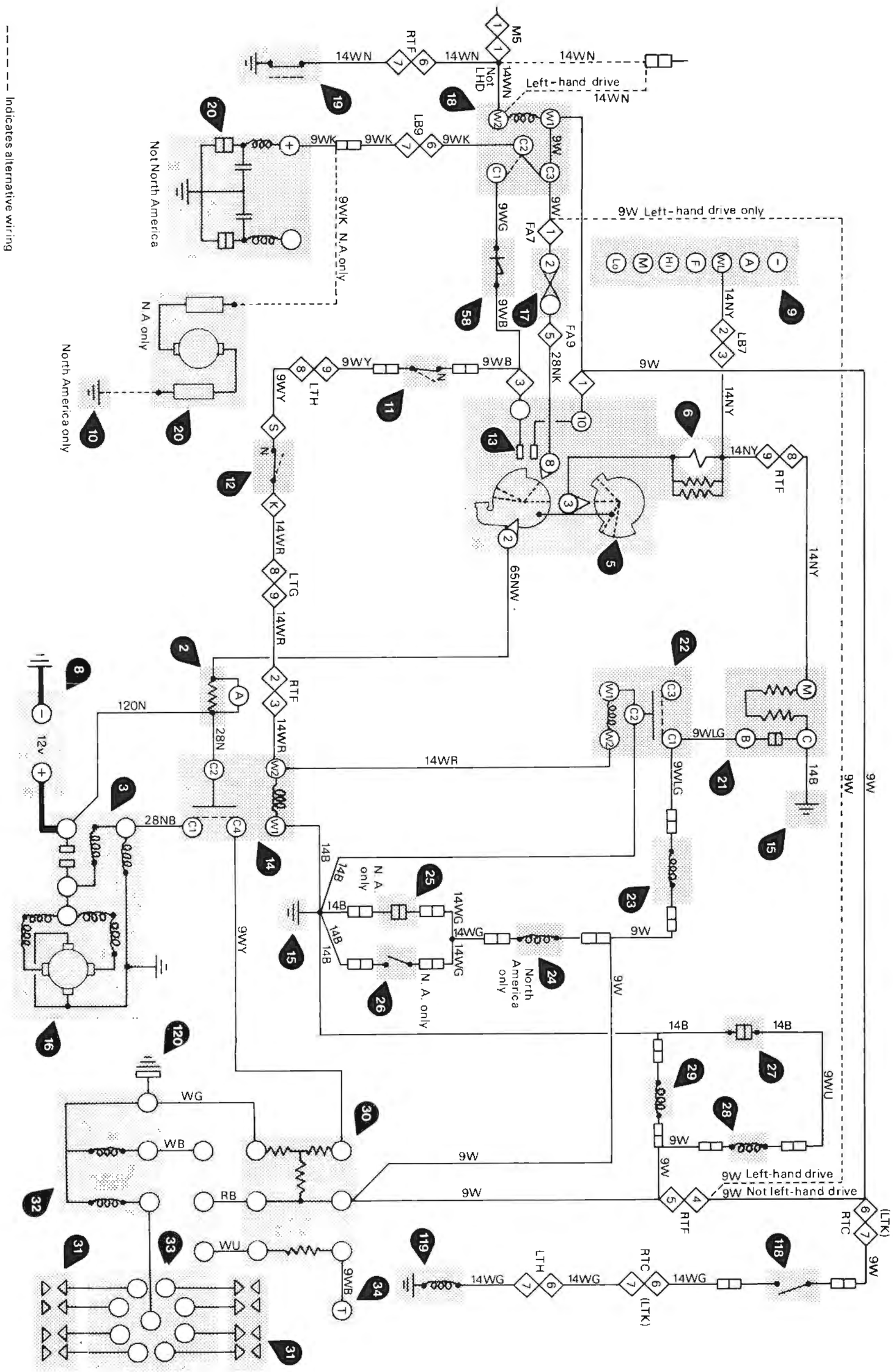

Section M3

Supplement number 1 Ignition system Contents

	Page
Introduction	M3 - 3
Ignition distributor	M3 - 3
Ballast resistance unit	M3 - 4
Sparking plugs	M3 - 4
Choke thermal delay unit	M3 - 4
Choke-on-start relay	M3 - 5
Choke solenoid	M3 - 5
Petrol pumps relay	M3 - 5
Component location	M3 - 7
Schematic wiring diagrams	
Right-hand drive cars	M3 - 9
Left-hand drive cars for countries other than Canada Japan and U.S.A.	M3 - 11
Left-hand drive cars for Canada, Japan and U.S.A	M3 - 13

From car serial numbers

Silver Shadow II	-	SRX 34573
Silver Wraith II	-	LRG 34601
Bentley T2	-	SBH 34775
Corniche Saloon	-	CRH 34830
Corniche Convertible	-	DRX 33029

Printed in England

© Rolls-Royce Motors Limited 1979

July 1979

TSD 4200

Section M3

Supplement number 1
Ignition system

Introduction

Details of EGR solenoid, EGR thermostat, full throttle switch, throttle weakener solenoid, throttle weakener switch and anti-diesel solenoid can be found in Chapter U. Details of the kick-down switch and kick-down solnoid (detent) can be found in Chapter T.

Ignition distributor (see Fig. M18 Supp. 1)

The ignition distributor fitted is a Lucas Opus Mk. 2 'High energy' with 5EM module in which an oscillator pick-up and control unit replace the conventional contact breaker. A drum with eight ferrite rods (one per cylinder) moulded into the outer edge is mounted on the distributor drive-shaft. As the drum rotates, each time one of the ferrite rods passes the oscillator pick-up, a voltage is created which is then amplified and used to switch off the normally conducting power transistor which is connected to the primary coil winding of the ignition coil, thereby inducing a high voltage in the secondary winding. This is then distributed to the sparking plugs in the conventional manner.

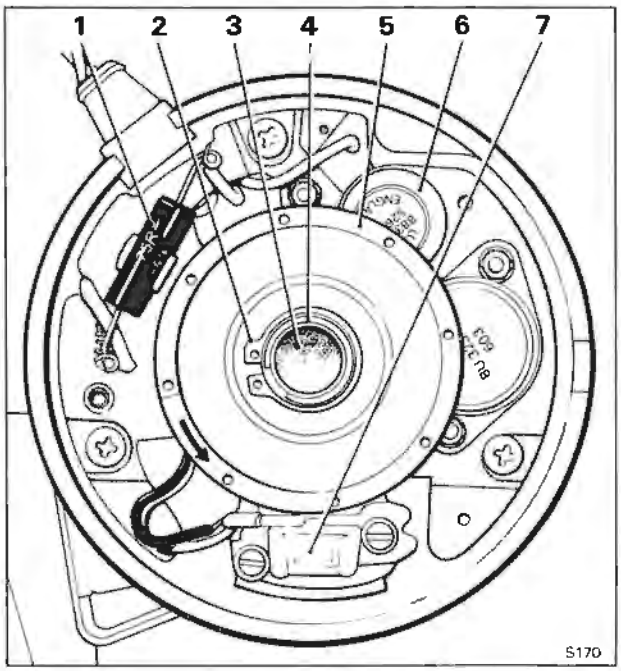

Fig. M1 Supp. 1. Ignition distributor (5EM module)

1 Resistor
2 Circlip
3 Lubrication pad
4 Rotor carrier assembly
5 Timing rotor
6 Control unit
7 Pick-up module

Ignition distributor - To remove

1. Disconnect the battery.
2. Remove the gear-range thermal cut-out from the fuseboard.
3. Remove the distributor cap.
4. Rotate the crankshaft in the normal direction of rotation until the rotor arm is adjacent to 'A1' plug position (i.e. 'A1' piston at approximately T.D.C. on the firing stroke).
5. Disconnect the plug connecting the distributor to the ballast resistor and also remove the leads from the ignition coil. Note the colours of the sleeve markers to facilitate fitting.
6. Disconnect the hose from the distributor advance capsule.
7. Unscrew the two nuts securing the distributor clamp to the pedestal. **Do not slacken the distributor clamp screw.**
8. Withdraw the distributor.

Ignition distributor - To fit

Reverse the procedure for removal, if the crankshaft was rotated while the distributor was removed, the correct position for ignition timing can be obtained as follows:

1. Remove 'A' bank rocker cover from the engine.
2. Rotate the crankshaft by hand at least one full turn in the normal direction of rotation until the 'A1' inlet valve has opened and just closed.
3. Further rotate the crankshaft in the correct direction of rotation until the flywheel is at T.D.C.
4. Fit the 'A' bank rocker cover.
5. Renew the seal at the base of the distributor housing.
6. Fit the distributor with the rotor arm adjacent to the 'A1' plug position and reconnect the hose to the advance capsule
7. Set the ignition timing.

Ignition timing - To set

For cars fitted with emission control components, refer to Chapter U, for all other cars proceed as follows:

1. Run the engine until normal operating temperature is reached and the choke 'fast-idle' is off Stop the engine.
2. Connect a stroboscope and impulse tachometer in accordance with the manufacturers' instructions.

Printed in England
© Rolls-Royce Motors Limited 1979
July 1979
TSD 4200



Fig. M2 Supp. 1. Ignition timing pointer

3. Disconnect the hose from the distributor advance capsule and blank-off the hose.
4. Set the engine speed and timing as shown in table 1. The engine speed should be set by decreasing from a higher speed.
5. Tighten the distributor clamp bolt and verify that the timing is still correct.
6. Reset the engine speed to 650 rpm and check the timing as shown in table 2.
7. Stop the engine and reconnect the hose to the advance capsule.

Table 1 Ignition timing

	Engine speed	Crankshaft timing
Silver Shadow II, Silver Wraith II and Bentley T2 (SU carburetters)	1300 rpm	25° BTDC
Corniche and Camargue (Solex carburetters)	1200 rpm	15° BTDC

Table 2 Ignition timing check

	Engine speed	Crankshaft timing
Silver Shadow II, Silver Wraith II and Bentley T2 (SU carburetters)	650 rpm	11° BTDC (approximately)
Corniche and Camargue (Solex carburetters)	650 rpm	2° BTDC (approximately)

Ignition coil
The ignition coil fitted to cars destined for North America, Japan and Australia is a Lucas 23C12, all other cars have a Lucas 22C12 coil.

Ignition coil - To remove and fit
1. Disconnect the battery.
2. Disconnect the leads from the coil.
3. Remove the two setscrews and spacers securing the coil.
4. Remove the coil.
5. When fitting the coil, ensure that the low tension and capacitor leads are fitted correctly. The capacitor is connected to the + terminal.

Ballast resistance unit

The ballast resistance unit is an encapsulated assembly fixed in an aluminium heatsink and is attached to the front face of the engine near the distributor. If the unit develops a fault, it cannot be repaired therefore it must be replaced.

The resistance unit ensures that a satisfactory voltage is applied to the primary winding of the coil at all times, particularly during the period of starter motor operation when the battery terminal voltage is temporarily below normal. The tachometer test connection is connected to one of the 'Lucar' connections

Sparking plugs - To clean and check

1. Remove the sparking plugs.
2. Thoroughly clean in a sparking plug cleaning machine.
3. Clean off all surplus abrasive material from the electrodes and threads with compressed air.
4. Set the plug gap to between 0,74 mm. and 0,77 mm. (0.029 in. and 0.031 in.).

For cars destined for North America, Japan and Australia, refer to Chapter U.

Sparking plugs - To fit
1. Ensure that the threads are clean then lubricate with a small amount of 'Graphogen' grease.
2. Ensure that a steel washer is fitted to each plug.
3. Fit and tighten the plugs to between 1,79 kgf m and 2,35 kgf.m. (13 lbf.ft. and 17 lbf.ft.)

Choke thermal delay unit

Used in conjunction with the choke solenoid to hold the choke flap closed when the engine ambient temperature is below 0 °C. The length of time that the contacts are made depends on the ambient temperature and is controlled by the two resistance/heaters in the unit, the colder the temperature, the longer the contacts are 'made

Choke thermal delay unit - To test (see Fig. M3 Supp. 1)
1. Disconnect the battery.
2. Remove the unit from the car and place it in a refrigerator for 5 minutes with the temperature below freezing point.
3. While the unit is still cold (below freezing point) connect terminal C to the negative side of a 12v battery and connect terminal B to a 12v test lamp, connect the other test lamp lead to the positive terminal of the battery. The lamp should light.

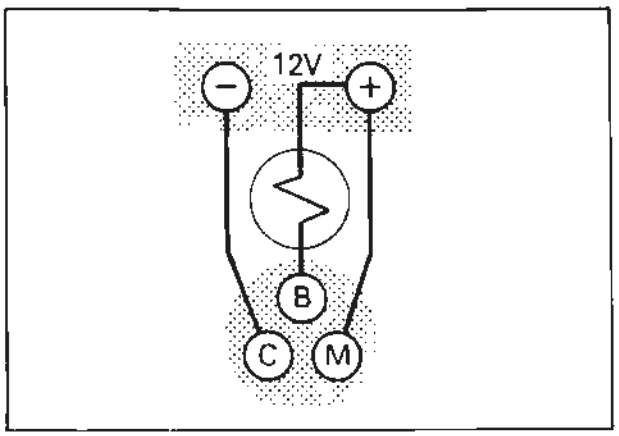

Fig. M3 Supp. 1. Choke thermal delay test circuit

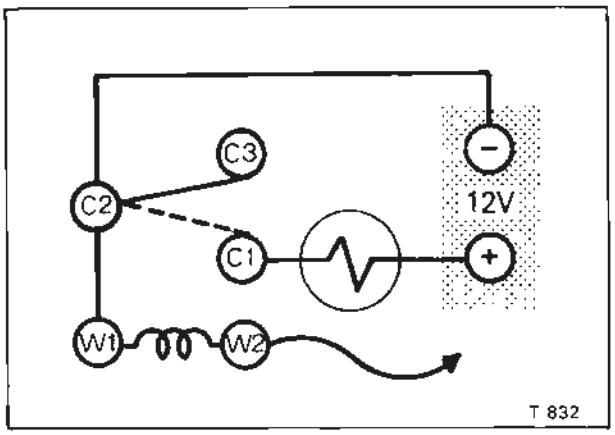

Fig. M4 Supp. 1. Choke-on-start relay test circuit

4. Connect terminal M of the unit to the positive terminal of the battery and verify that the lamp is extinguished within one minute.

Choke-on-start relay

The choke-on-start relay coil is energised whenever the starter switch is operated and both neutral start switches are in the neutral or park position (i.e. when the engine is cranking). Its function is to provide an earth path for the choke solenoid during engine cranking thereby holding the choke flap closed.

Relay - To test (see Fig. M4 Supp. 1)

1. Disconnect the battery.
2. Remove the white/red cable from terminal W2 and the white/light green cables from terminal C1. Insulate the cables.
3. Connect a test lamp to the relay as shown in the following diagram, the lamp should be extinguished.
4. Connect W2 to the positive terminal of the battery, the lamp should light.

Choke solenoid

The choke solenoid operates the choke flap and it is energised whenever the engine is cranking or the choke thermal delay switch is closed i.e. when the engine ambient temperature is below 0 °C. The choke flap is closed when the solenoid is energised.

Solenoid - To test

1. Switch on the ignition.
2. Disconnect the white/light green cable 'Lucar' connector at the solenoid.
3. Connect a wire from the solenoid 'Lucar' connector to earth and ensure that the choke flap closes.
4. Switch off the ignition and reconnect the white/light green cable.

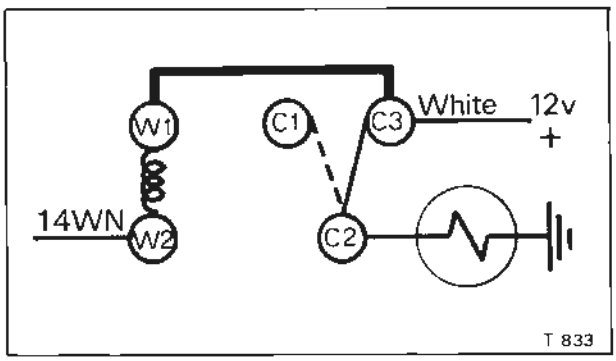

Fig. M5 Supp. 1. Petrol pumps relay test circuit

Petrol pumps relay

The coil of the relay is earthed via the oil pressure switch which effectively prevents the petrol pumps from operating if the ignition is switched on and the oil pressure is low (i.e. switch is made).

Relay - To test (see Fig. M5 Supp. 1)

1. Disconnect the white/pink cable from C2 and connect a 12v test lamp between C2 and earth.
2. Switch on the ignition and use another test lamp or meter to verify that there is a live feed at C3. The test lamp connected to C2 should remain extinguished.
3. Disconnect the white/brown cable from W2, the test lamp should light.
4. Switch off the ignition.

Printed in England
© Rolls-Royce Motors Limited 1979

Section M3

Supplement number 1 Ignition system

Component location

Applicable to all cars from car serial numbers

Silver Shadow II	-	SRX 34573
Silver Wraith II	-	LRG 34601
Bentley T2	-	SBH 34775
Corniche Saloon	-	CRH 34830
Corniche Convertible	-	DRX 33029

Fig. M6 Supp. 1

Printed in England

© Rolls-Royce Motors Limited 1979

T.S.D. 4200 July 1979

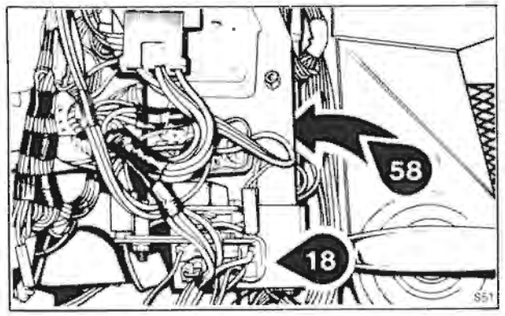

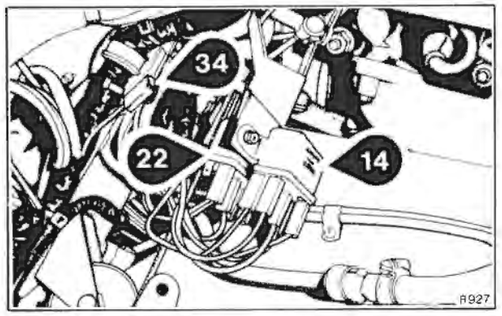

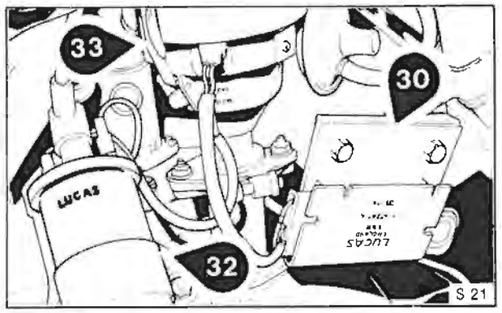

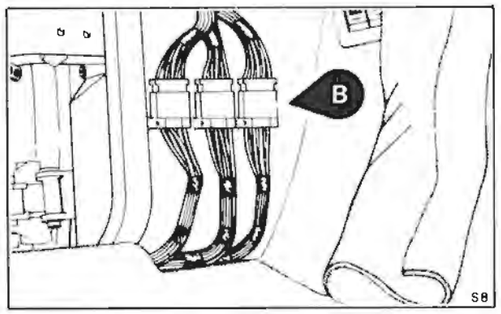

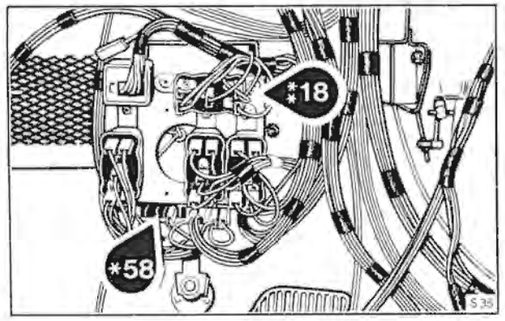

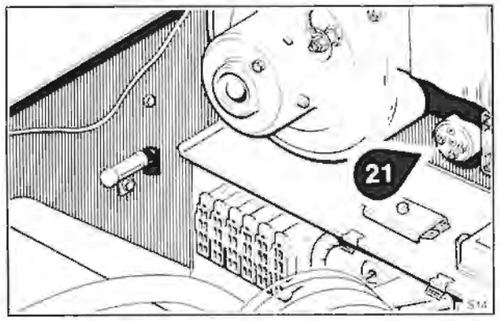

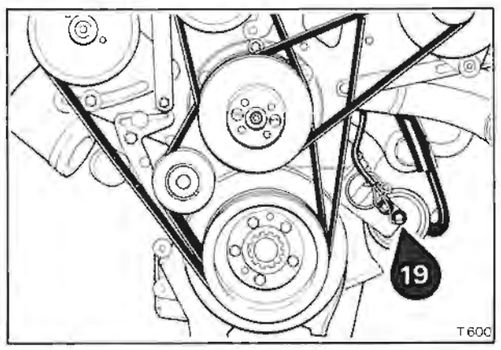

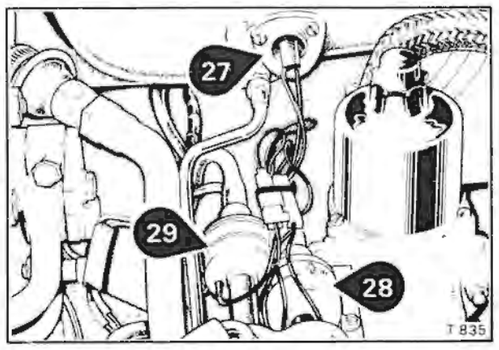

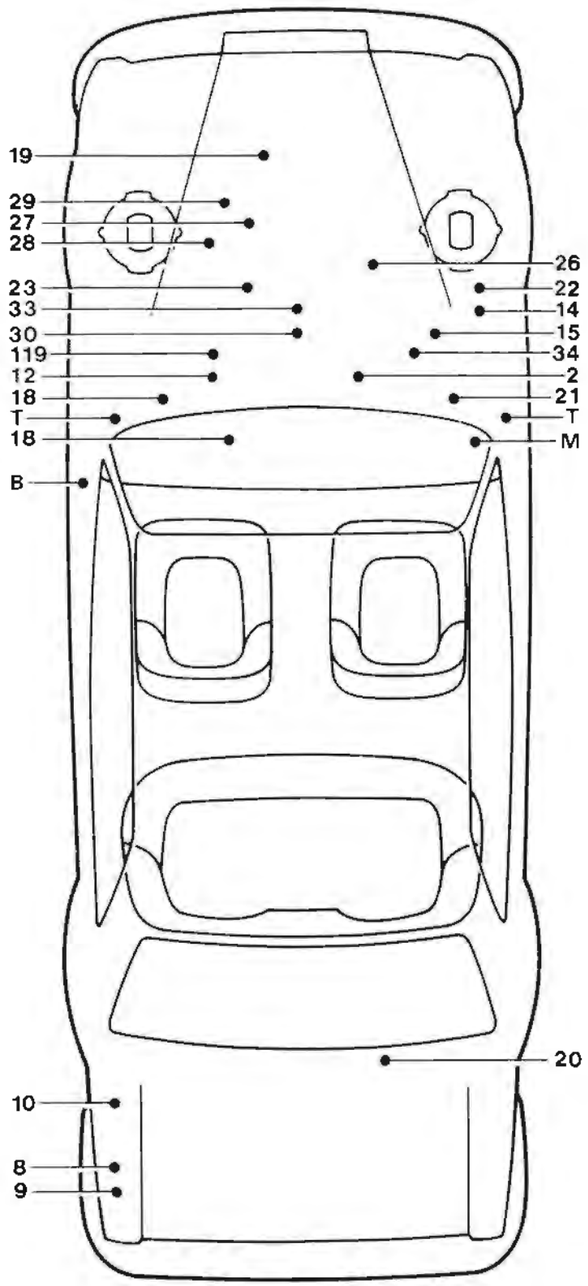

Components

2	Ammeter shunt
3	Starter solenoid
5	Ignition switch
6	Ignition warning lamp
8	Battery
9	Regulator
10	Left-hand boot earth
11	Column neutral start switch
12	Gearbox neutral start switch
13	Starter switch
14	Starter relay
15	Right-hand valance earth
16	Starter motor
17	Fuseboard 'A'
18	Petrol pumps relay
19	Oil pressure switch
20	Petrol pumps
21	Choke thermal delay unit
22	Choke-on-start relay
23	Choke solenoid
26	Full throttle switch
27	Throttle weakener thermostat
28	Throttle weakener solenoid
29	Anti-diesel solenoid
30	Ballast resistor
31	Spark plugs
32	Ignition coil
33	Ignition distributor
34	Tacho test connector
58	Diode block
118	Kick-down switch
119	Kick-down solenoid (detent)
120	Radio interference suppressor

T	Toeboard socket
B	Body socket
M	Main distribution loom socket

*	All left-hand drive
**	Left-hand drive - not North America

T 836

U313

Section M3

Supplement number 1 Ignition system

Schematic wiring diagram

Applicable to right-hand drive cars for countries other than Australia and Japan

From car serial numbers

Silver Shadow II	-	SRX 34573
Silver Wraith II	-	LRG 34601
Bentley T2	-	SBH 34775
Corniche Saloon	-	CRH 34830
Corniche Convertible	-	DRX 33029

Fig. M7 Supp. 1

Printed in England

© Rolls-Royce Motors Limited 1979

July 1979

TSD 4200

© Rolls-Royce Motors Limited 1979
Printed in England

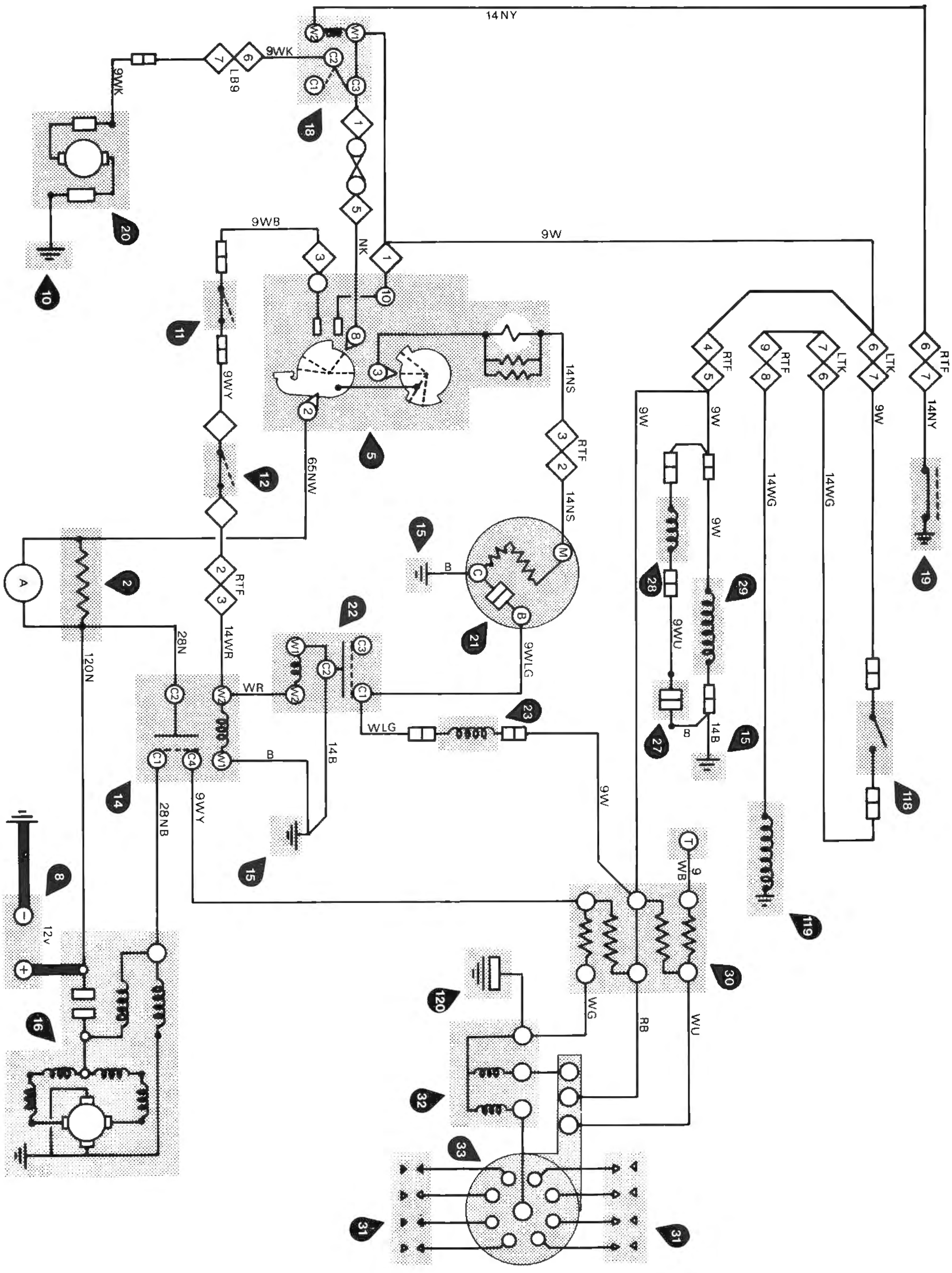

U314

Section M3

Supplement number 1
Ignition system

Schematic wiring diagram

Applicable to left-hand drive cars for countries other than Canada, Japan and U.S.A. From car serial numbers

Silver Shadow II	-	SRX 34573
Silver Wraith II	-	LRG 34601
Bentley T2	-	SBH 34775
Corniche Saloon	-	CRH 34830
Corniche Convertible	-	DRX 33029

Fig. M8 Supp. 1

Printed in England

© Rolls-Royce Motors Limited 1979

TSD 4200 July 1979

© Rolls-Royce Motors Limited 1979
Printed in England

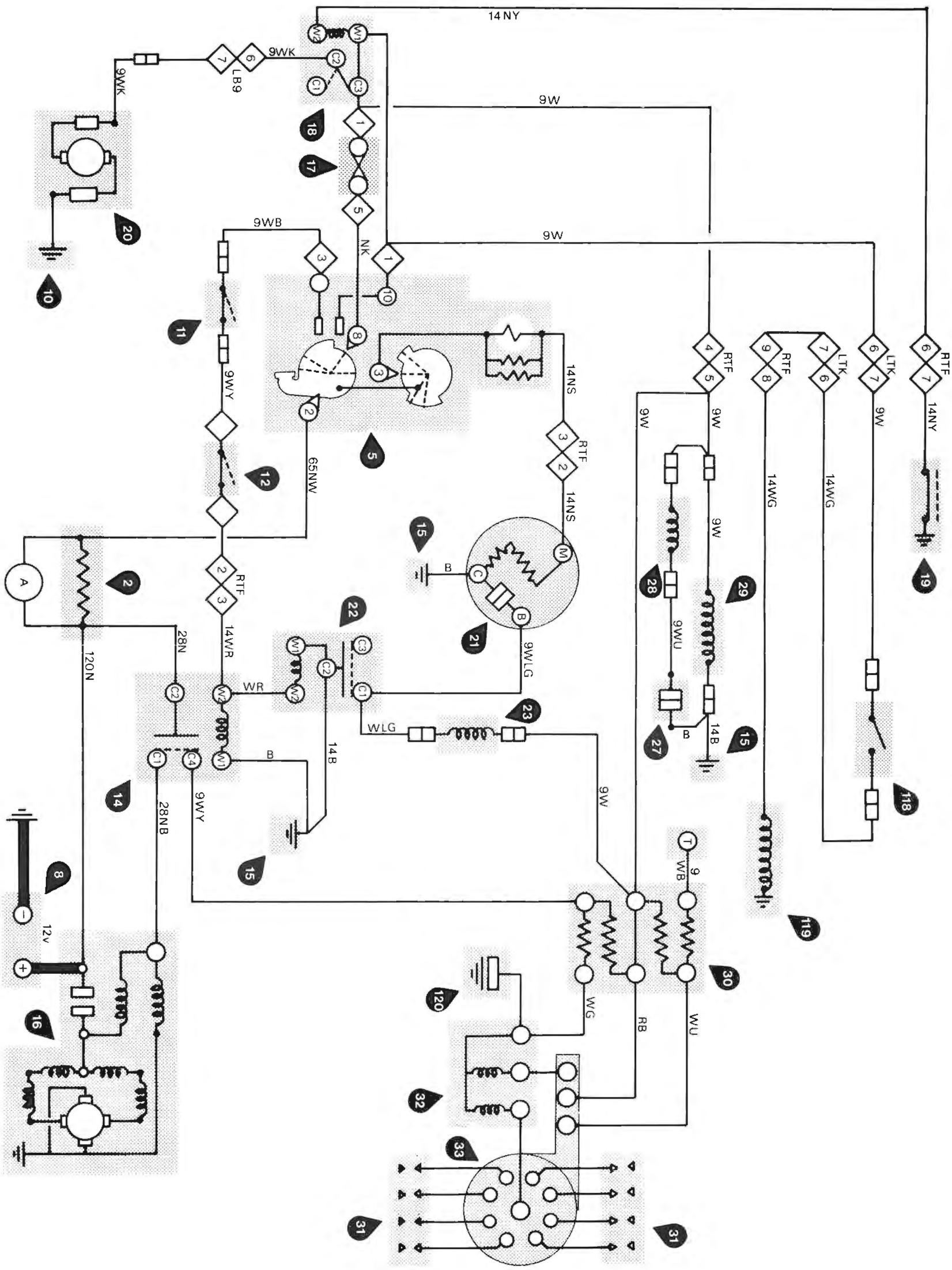

U315

Section M3

Supplement number 1
Ignition system

Schematic wiring diagram

Applicable to left-hand drive cars for Canada, Japan and U.S.A.

From car serial numbers

Silver Shadow II	-	SRX 34573
Silver Wraith II	-	LRG 34601
Bentley T2	-	SBH 34775
Corniche Saloon	-	CRH 34830
Corniche Convertible	-	DRX 33029

Fig. M9 Supp. 1

Printed in England

© Rolls-Royce Motors Limited 1979

TSD 4200 July 1979

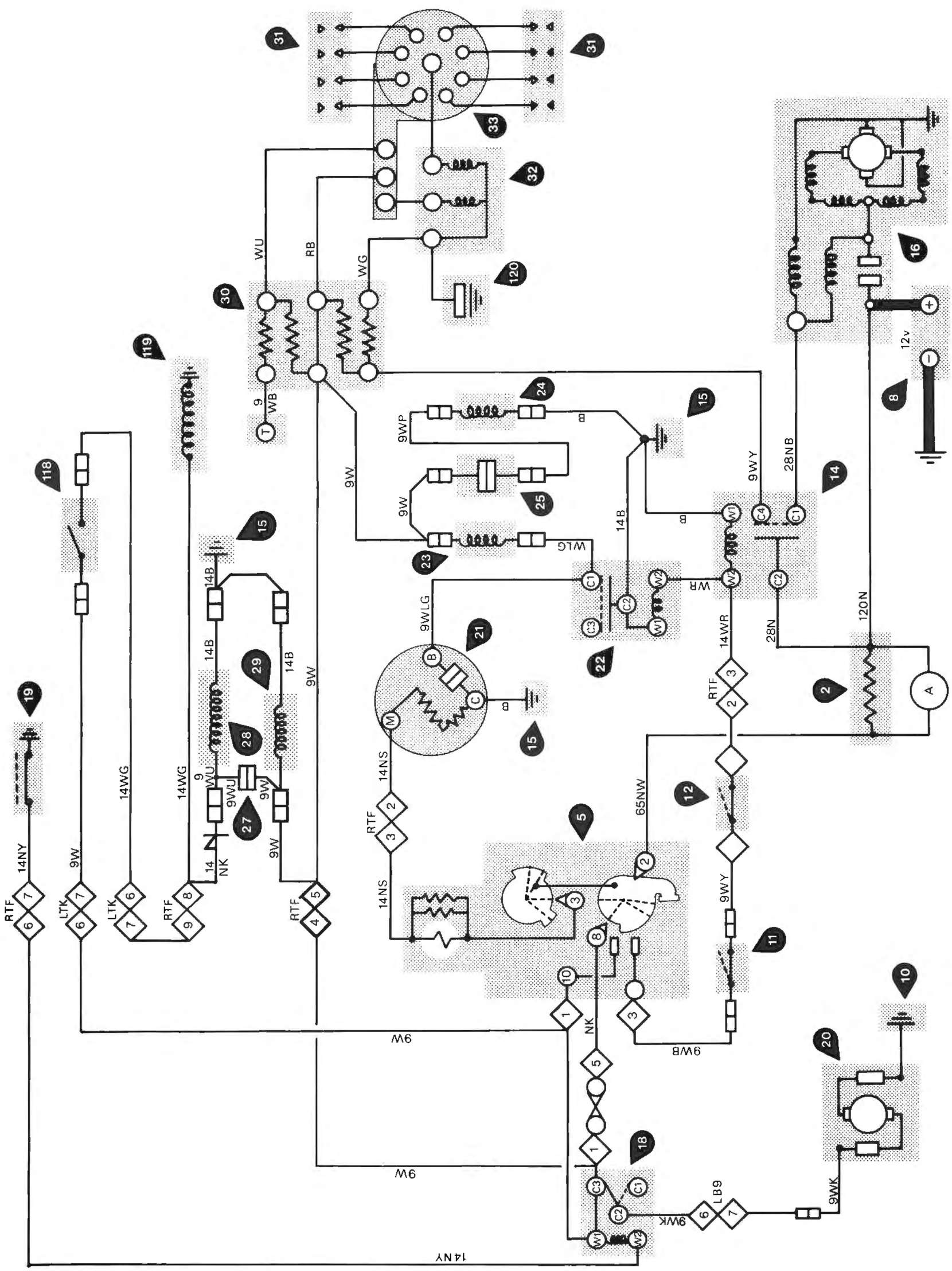

© Rolls-Royce Motors Limited 1979

Printed in England

U315

Section M3

Supplement number 2
Ignition timing data

S.U. HIF7 carburetters

Engines without the suffix letter B after the serial number

Fuel	Ignition timing	R.P.M.
97 R.O.N. (Min.)	25°B.T.D.C.	1 300
94 R.O.N. (Min.)	25°B.T.D.C.	2 050
90 R.O.N. (Min.)	25°B.T.D.C.	2 800

Engines with the suffix letter B after the serial number (e.g. SYL 269078)

Fuel	Ignition timing	R.P.M.
97 R.O.N. (Min.)	20°B.T.D.C.	2 200
94 R.O.N. (Min.)	20°B.T.D.C.	2 200
90 R.O.N. (Min.)	17°B.T.D.C.	2 200

Note

(a) When setting the ignition timing ensure that the distributor vacuum advance signal hose is disconnected at the capsule and the hose blanked off.

(b) Details of the ignition timing applicable to cars destined for Australia, Canada, Japan and the U.S.A. are given in the appropriate section of Chapter U.

Solex 4A1 carburetter

Fuel	Ignition timing	R.P.M.
Car identification (†)		
97 R.O.N. (Min.)	15°B.T.D.C.	1 200
94 R.O.N. (Min.)	15°B.T.D.C.	1 700
90 R.O.N. (Min.)*	15°B.T.D.C.	2 200
Car identification (††)		
97 R.O.N. (Min.)	25°B.T.D.C.	1 850
94 R.O.N. (Min.)	20°B.T.D.C.	1 650
90 R.O.N. (Min.)*	20°B.T.D.C.	2 350
Car identification (†††)		
97 R.O.N. (Min.)	20°B.T.D.C.	2 100
94 R.O.N. (Min.)	20°B.T.D.C.	2 100
90 R.O.N. (Min.)*	16°B.T.D.C.	2 100

Note

(a) For the identification of cars refer to Chapter K, divider card.

(b) When setting the ignition timing ensure that the distributor vacuum advance signal hose is disconnected from the capsule and the hose blanked off.

(c) Carburetter settings marked with an asterisk(*) require a modification to the distributor vacuum advance signal and throttle damper/jack hoses, details are given on Chapter K, divider card.

Printed in England

© Rolls-Royce Motors Limited 1981

December 1981

TSD 4200

Printed in England

© Rolls-Royce Motors Limited 1977

February 1977

T.S.D. 4200

Section M4

Warning lamps and instruments Contents

Silver Shadow II
Silver Wraith II
Bentley T2
Corniche

	Page
Introduction	M4 - 3
Clock	M4 - 3
Outside air temperature gauge and sensor	M4 - 3
Ammeter, Fuel/Oil, Coolant, Oil pressure gauges	M4 - 3
Fuel tank and oil sump units	M4 - 3
Speedometer and generator	M4 - 3
Washer fluid level warning	M4 - 3
Coolant level warning	M4 - 4
Ice warning	M4 - 4
Low fuel	M4 - 4
Brake pressure 1 and 2	M4 - 4
Parking brake	M4 - 4
Low brake fluid	M4 - 4
Engine overheat	M4 - 4
Stoplamp failure	M4 - 4
Fault diagnosis	M4 - 5
Component location (instruments)	M4 - 13
Wiring diagram (instruments)	M4 - 15
Component location (washer fluid and coolant levels)	M4 - 17
Wiring diagrams (washer fluid and coolant levels)	M4 - 19
Component location (ice warning and low fuel)	M4 - 21
Wiring diagram (ice warning and low fuel)	M4 - 23
Component location (remaining warning lamps)	M4 - 25
Wiring diagram (remaining warning lamps)	M4 - 27

Printed in England
© Rolls-Royce Motors Limited 1977
February 1977
T.S.D. 4200

Section M4

Warning lamps and instruments

Introduction

Pages M4 - 1 to M4 - 27 only apply to Silver Shadow II, Silver Wraith II, Bentley T2 and Corniche

For simplicity, the wiring diagrams have been sub-divided into five separate sheets.

To ensure correct alignment when fitting an instrument, it is advisable to scribe the position of the instrument relative to the instrument panel before removal.

Clock

The clock timing is controlled by a quartz crystal and therefore will not need adjusting.

Clock - To remove

1. Disconnect the battery.
2. Remove the facia.
3. Remove the screws securing the clock to the instrument panel.
4. Withdraw the clock and disconnect the cables.

Outside air temperature gauge and sensor

The gauge and sensor are a matched pair, therefore if one is faulty **both** components must be replaced. The temperature gauge is removed in a similar manner to the clock.

Sensor - To remove

1. Disconnect the battery.
2. Remove the radiator grill.
3. Disconnect the pink/blue cable eyelet at the sensor.
4. Unscrew the nut securing the sensor to the bracket.

Ammeter, Fuel/Oil, Coolant, Oil pressure gauges (4-in-1 instrument)

These four instruments are all contained in one case, if a fault occurs on one instrument, the complete unit must be replaced.

4-in-1 instrument - To remove

1. Disconnect the battery.
2. Remove the facia.
3. Remove the screws securing the instrument to the instrument panel.
4. Withdraw the instrument and disconnect the cables.

Fuel tank and oil sump units

Always fit a new gasket and ensure clean clamping surfaces whenever a new tank unit or oil sump unit is fitted.

Speedometer and generator

The speedometer is an electric impulse speedometer driven by a speed generator which is fitted to the gearbox. It is removed in a similar manner to the clock.

If a speedometer is suspected of being faulty it can be confirmed by either substituting a good speedometer or by connecting it to a spare speed generator and spinning the generator shaft.

Refer to Section 5 for details of the speed generator.

Washer fluid level warning (see Figs. M27 & M28)

The basic circuit consists of a warning lamp, a probe fitted inside the washer fluid bottle and an amplifier. There are also two relays for checking purposes and two diodes to prevent feedback through the warning lamp and interaction with other circuits.

When the probe is immersed in the washer fluid it effectively connects the amplifier to earth and prevents an output being available to the warning lamp. However, when the fluid level drops below the probes, the amplifier is switched and connects a live feed to the warning lamp which is illuminated whenever the washer switch is depressed.

The warning lamp will also illuminate during engine cranking. The warning lamp test relay and washer fluid level relay then connects the warning lamp directly to fuse 1 and earth.

Warning lamp - To remove

1. Remove the facia trim, unscrew the screws securing the lamp cluster to the instrument panel and withdraw the cluster.
2. Remove the warning lamp bulb.

Washer fluid level relay - To test

1. Disconnect the white/purple cable from C1 and connect a test lamp between C1 and earth.
2. Switch on the ignition, the lamp should remain extinguished. Switch off the ignition.
3. Link C2 to W1 and switch on the ignition, the test lamp should illuminate. This shows that the coil is energised and that contacts C2 and C1 are 'made'.
4. Switch off the ignition and remove the connecting link between C2 and W1. Reconnect the white/purple cable to C1.

Note

This test assumes that the 14G cable is 'live' and that the left-hand 'A' post earth is sound. If the left-hand 'A' post earth is suspect, connect relay terminal W2 to a good earth for this test.

Diodes - To test
1. Disconnect the battery.
2. Disconnect the light green/black orange/ red cables and purple/orange cables.
3. Connect the positive side of a 12 volt battery to the large terminal on the diode.
4. Connect one lead of a 12v 5w lamp to the negative side of the battery and connect the other lead to the small terminal of the diode, the lamp should be lit.
5. Reverse the battery polarity and ensure that the lamp is extinguished.
6. Repeat this test for the other diode.

Coolant level warning (see Figs. M27 & M29)
The coolant level warning system consists basically of a probe in the coolant header tank, a warning lamp in the warning lamp cluster and an amplifier which is fitted on the warning lamp test circuit board. There are also two relays on the warning lamp test circuit board to enable the lamp to be checked.

While the probe is immersed in the coolant, the amplifier remains inactive and the warning lamp remains extinguished. However, when the coolant level drops below the probes, the amplifier is switched on and connects a live feed to the warning lamp.

The warning lamp will also illuminate during engine cranking. When the starter switch is operated, the warning lamp test and coolant level relays are energised, the contacts of the latter are connected in series with the coolant probe to simulate low coolant conditions.

Warning lamp test circuit board - To remove
1. Disconnect the battery.
2. Remove the top roll.
3. Disconnect the three multi-way connectors.
4. Remove the two screws securing the board support bracket and the screw securing the board. The board can now be removed.

Ice warning (see Figs. M30 & M31)
The basic ice warning system consists of a warning lamp, a low temperature sensor and an amplifier.

When the outside air temperature falls to 1 °C. the amplifier acts like a switch and connects the slate/orange cable of the warning lamp to earth (via the amplifier).

The warning lamp will also illuminate when the starter switch is operated. When the test relay coil energises, it opens contacts C2 and C3 which causes the amplifier to behave like a switch.

Also included in the ice warning system is a warning lamp dimming relay which reduces the intensity of the warning lamp when the car lights are switched on.

Low fuel (see Figs. M30 & M31)
The low fuel warning lamp will illuminate whenever the fuel tank contains 3½ gallons or less thus connecting the lamp directly to earth. The warning lamp dimming relay is also connected to the warning lamp to reduce the intensity of the warning lamp when the car lights are switched on.

Brake pressure 1 and 2 (see Figs. M32 & M33)
The brake pressure warning lamp will illuminate whenever the brake pressure switch is closed (i.e. when the brake pressure is low) and also during engine cranking.

Refer to Chapter G for all details regarding the brake pressure switches.

Parking brake (see Figs. M32 & M33)
The parking brake warning lamp will illuminate whenever the parking brake is applied and also during engine cranking. Details for setting the switch are in Chapter G.

Low brake fluid (see Figs. M32 & M33)
The low brake fluid warning lamp will illuminate when the fluid in either fluid reservoir is low and also when the engine is cranking.

Engine overheat (see Figs. M32 & M33)
When the engine cylinder block temperature reaches a critical temperature, the overheat switch will 'make' and provide an earth for the warning lamp and buzzer. The warning lamp will also illuminate during engine cranking.

Overheat buzzer - To test
1. Switch on the ignition.
2. Disconnect the cable from the overheat switch and momentarily connect the cable to the cylinder head or any other good earth. The buzzer should operate.
3. Reconnect the cable and switch off the ignition.

Stoplamp failure (see Figs. M32 & M33)
When both stoplamps are working, the current through the two coils of the stoplamp relay oppose each other and the reed switch remains open. If a stoplamp fails, the current flowing through one coil will close the reed switch which connects the warning lamp to earth causing it to glow.

The warning lamp will also glow during engine cranking.

Stoplamp failure relay - To test
1. Disconnect one of the 14YN cables from the relay, switch on the ignition and operate the footbrake. Verify that the warning lamp illuminates.
2. Replace the 14YN cable and disconnect the other 14YN cable. Operate the footbrake and verify that the warning lamp illuminates.
3. Switch off the ignition.

Stoplamp switch
Refer to Chapter G for setting details.

Section M4

Warning lamps and instruments Fault diagnosis

Malfunction	Possible cause	Action
All warning lamps and instruments (except ammeter) inoperative	Fuse 1 blown	Replace fuse. If fuse blows again investigate for short
No warning lamps during engine cranking (except oil pressure warning lamp)	Faulty warning lamps test relay	Substitute relay
	Poor relay earth	Check for soundness of earth at instrument panel and left-hand 'A' post
		Check for live feed on WB cable during cranking
	Faulty connections	Check WB cable at test circuit board and column neutral start switch
	Faulty test circuit board	Substitute board
Oil pressure gauge		
Oil pressure gauge inoperative	Faulty connection	Check for live feed on 14 G cable at instument and 9 GLG cable at instrument, toeboard socket and transmitter for continuity
	Faulty instrument	Substitute instrument
	Faulty transmitter	Substitute transmitter
Inaccurate indication	Inaccurate transmitter	Substitute transmitter
	Inaccurate instrument	Substitute instrument
Fuel/Oil level gauge		
Inaccurate reading	Faulty instrument (if both fuel and oil reading incorrect)	Substitute instrument
	Faulty fuel tank unit (if fuel only affected)	Substitute tank unit
	Faulty oil sump unit (if oil only affected)	Substitute sump unit
Gauge not working on fuel or oil	Faulty gauge	Substitute gauge
	Faulty connection	Check 14 G cable at instrument for live feed and GS and GK cable for continuity.
Gauge not working on fuel only	Faulty tank unit	Disconnect 9GS cable at tank unit, gauge should read low. Momentarily connect the cable to earth, the gauge should read high (off scale).

Printed in England
© Rolls-Royce Motors Limited 1977

Malfunction	Possible cause	Action
Gauge not working on fuel only (continued)	Faulty connection	Check that body socket is secure and changeover switch socket is secure
	Faulty change over switch	Substitute switch
Gauge not working on oil only	Faulty oil sump unit	Disconnect 9GK cable at sump unit and proceed as for fuel tank unit
	Faulty connection	Ensure that toeboard socket is secure and changeover switch socket is secure
	Faulty changeover switch	Substitute switch
Coolant temperature gauge		
Inaccurate reading	Faulty sensor	Substitute sensor
	Faulty instrument	Substitute instrument
Instrument not working	Faulty connection	Check wiring at back of instrument
	Faulty instrument	Substitute instrument
Ammeter		
No current reading	Faulty ammeter	Substitute 4 in 1 instrument
	Faulty connection	Check N and NW cables at ammeter and shunt
Inaccurate reading	Faulty ammeter	Substitute ammeter
	Faulty shunt	Substitute shunt
		For charging faults see Charging System
Speedometer		
Speedometer and speed control inoperative	Speed generator not working	Check generator earth connection at left-hand valance earth
	Faulty generator	Substitute generator
	Faulty connection	Check 14 red/green cable at generator, toeboard socket and speedometer
Speedometer not working, speed control satisfactory	Faulty instrument	Replace instrument
	Faulty connection	Check connections to instrument
		Check earth connections at right-hand 'A' post earth and 'Lucar' connector at main beam warning lamp
Clock		
Clock stopped or inaccurate	Faulty connection	Check brown/purple connection at clock
	Faulty clock	Substitute clock

Malfunction	Possible cause	Action
Outside temperature gauge		
		Note: If a gauge or sensor is faulty, both must be changed as a matched pair
Inaccurate indication	Inaccurate sensor	Substitute sensor (and gauge)
	Inaccurate gauge	Substitue gauge (and sensor)
No reading on gauge	Faulty sensor	Connect sensor to earth, if sensor is faulty gauge will read high
	Faulty connection	Check pink/blue cables at toeboard socket, sensor and gauge
	Faulty gauge	Substitute gauge (and sensor)
	Poor earth	Connect instrument negative to known good earth. Check earth connections at warning lamp test circuit board, instrument panel earth and left-hand 'A' post earth
Gauge reading off-scale 'high'	Faulty sensor	Disconnect pink/blue cable at sensor. If the sensor is faulty the gauge will read low
	Short circuit to earth	Check pink/blue cable at sensor and toeboard socket
	Faulty gauge	Substitute gauge (and sensor)
Brake pressure warning lamps 1 and 2		
Lamps remain lit with ignition on	Low brake pressure	See Chapter G - Workshop manual
	Faulty switch	Disconnect yellow/orange cable at switch for 1 and white/orange cable for 2
	Warning lamp circuit board fault	At circuit board, disconnect 5-way connector
Warning lamps unlit during engine cranking	Faulty bulb(s)	Replace bulb(s)
	Faulty connection	At lamp cluster, check yellow/orange cable for 1 and white/orange for 2
	Faulty diode in circuit board	Substitute circuit board
Low pressure fault condition not indicated	Faulty brake pressure switches	At switch, connect cable to good earth
	Faulty connection	Check yellow/orange or white/orange cable at circuit board, toeboard socket and brake pressure switch

Printed in England
© Rolls-Royce Motors Limited 1977
February 1977
T.S.D. 4200

Malfunction	Possible cause	Action
Parking brake warning lamp		
Lamp remains lit with ignition on and parking brake released	Parking brake micro-switch operating mechanism	Ensure that micro-switch is released to 'off' position
	Faulty micro-switch	Disconnect blue/orange cable at micro-switch
Warning lamp unlit during engine cranking	Faulty bulb	Replace bulb
	Faulty diode in circuit board	Substitute circuit board
	Faulty connection	Check blue/orange cable at lamp cluster and circuit board
Warning lamp unlit when parking brake is applied	Faulty micro-switch operating mechanism	Ensure that micro-switch is being operated
	Faulty micro-switch	At the switch, connect blue/orange cable to earth (14B cable)
	Faulty connection	Check blue/orange cable at lamp cluster and circuit board socket
	Poor earth connection	Check 14B cable at micro-switch and right-hand 'A' post earth
Low brake fluid		
Warning lamp remains lit with ignition on	Fluid level low	Check level in reservoirs
	Fluid level switch faulty	Disconnect black/orange cable at reservoir
	Warning lamp circuit board faulty	Substitute circuit board
Warning lamp unlit during engine cranking	Faulty bulb	Replace bulb
	Faulty connection	Check black/orange cable at lamp cluster, circuit board, toeboard socket, fluid level resistor and fluid level switch
	Faulty diode in circuit board	Substitute board
Low fluid level condition not indicated	Faulty low fluid level switch	At the reservoir, connect black/orange cable to earth
	Faulty connection	Check black/orange cable at circuit board socket (5-way), toeboard socket and reservoir
Engine overheat		
Warning lamp and buzzer operate with ignition switched on	Engine overheating	Change overheat switch for a known good switch. If lamp and buzzer still operate with slate/light green cable disconnected, the engine is overheating
	Faulty overheat switch	Substitute switch

Malfunction	Possible cause	Action
Warning lamp lit with ignition on, buzzer not operating. (Engine satisfactory)	Warning lamp circuit board faulty	Disconnect 7-way socket at circuit board
Warning lamp not lit during engine cranking	Faulty bulb	Replace bulb
	Faulty connection	Check slate/red cable at lamp cluster and circuit board 7-way plug
	Faulty circuit board	Replace board
Engine overheat condition not indicated	Faulty overheat switch	Substitute switch
	Faulty connection	Check connections at toeboard socket, overheat switch and fuseboard
	Fuse 1 'blown'	Replace fuse
Stoplamp failure		
Warning lamp not lit during engine cranking	Faulty bulb	Replace bulb
	Faulty connection	Check brown/orange cable at lamp cluster and circuit board
	Faulty circuit board	Substitute board
Warning lamp remains lit with ignition on	Faulty reed switch in stoplamp relay	Substitute relay
	Short circuit to earth	Disconnect stoplamp relay, if fault persists check brown/orange cable at toeboard socket
Stoplamp failure not indicated	Faulty stoplamp relay	Substitute relay
	Faulty connection	Check brown/orange cable at toeboard socket, stoplamp relay and test circuit board
	Poor earth	Connect pin 1 of stoplamp relay to a good earth
Washer fluid level		
Warning lamp not lit during engine cranking	Bulb broken	Replace bulb
	Washer fluid level relay faulty	Test relay
	Poor earth	Check earth connection at instrument panel and left-hand 'A' post
	Faulty diode	At diode block, connect orange/red cable to earth
	Poor connection	Check orange/red cable at test circuit board, purple/orange cable and white/purple cable at lamp cluster and white/purple cable at fluid level amplifier and fluid level relay. Test for 'live' feed on green cable at relay

Printed in England
© Rolls-Royce Motors Limited 1977

Malfunction	Possible cause	Action
Warning lamp remains lit	Low washer fluid	Check fluid level
	Washer fluid level relay faulty	Disconnect white/purple cable at relay
	Faulty amplifier	Substitute amplifier
	Poor connections	Check connections at toeboard socket, washer reservoir, amplifier and left-hand 'A' post earth
Low fluid level not indicated	Faulty amplifier	Substitute amplifier
	Bulb broken	Replace bulb
	Faulty diode	At diode block connect light green/black cable to earth
	Poor connections	Check soundness of cables at amplifier, warning lamp, diode block, washer switch and right-hand 'A' post earth
	Washer bottle probe faulty	Disconnect black/purple cable
Coolant level		
Warning lamp remains lit with ignition on	Low coolant level	Check coolant level
	Faulty amplifier on test circuit board	Substitute test circuit board
	Faulty coolant level relay on test circuit board	Substitute board
	Faulty probe	At probe, connect black/light green cable to black cable
	Faulty connection	Check black/light green cable at warning lamp circuit board, toeboard socket and probe
	Warning lamp circuit board fault	Substitute circuit board
Warning lamp unlit during engine cranking	Faulty bulb	Replace bulb
	Faulty circuit board	Substitute circuit board
	Faulty connection	Check light green/orange cable at lamp cluster and circuit board
	Poor earth connection	Check earth at instrument panel and left-hand 'A' post
Low coolant condition not indicated	Faulty coolant probe	Replace probe
Ice warning		
Warning lamp lit with ignition switched on	Low ambient temperature	Determine temperature at which lamp operates

Malfunction	Possible cause	Action
Warning lamp lit with ignition switched on (continued)	Faulty sensor	At sensor, connect yellow/slate cable to white/slate cable
	Faulty test circuit board	Substitute circuit board
	Faulty connection	Check yellow/slate cable at sensor, toeboard socket and circuit board. Check white/slate cable at sensor, toeboard socket and circuit board
	Faulty ice warning unit	Replace unit
Warning lamp not lit during engine cranking	Faulty bulb	Replace bulb
	Test circuit board faulty	Substitute board
	Poor connection	Check green/red cable at warning lamp cluster and test circuit board
	Faulty ice warning unit	Replace unit
Ice warning not indicated	Faulty sensor	Substitute sensor
	Faulty test circuit board	Substitute board
	Faulty bulb	Replace bulb
	Faulty ice warning unit	Replace unit
Ice warning and low fuel lamps dimly lit	Faulty dimming relay on test circuit board	Substitute circuit board
Ice warning and low fuel lamps fail to dim	Faulty dimming relay on circuit board	Substitute circuit board
	Faulty connection	At circuit board, check for 12v at pin 9 of 9-way connector (red cable)
Low fuel		
Warning lamp remains lit when ignition is on	Low fuel level	Check fuel level
	Faulty tank unit	Disconnect green/orange cable at tank unit
	Short circuit to earth	Disconnect black cable at tank unit. If lamp remains lit, check green/orange cable for earth fault
Warning lamp not lit during engine cranking	Faulty bulb	Replace bulb
	Faulty circuit board	Substitute board
	Poor connection	Check green/red cable at test circuit board and lamp cluster and green/orange cable at lamp cluster and tank unit
Warning lamp dimly lit or fails to dim.	See Ice warning	

Printed in England
© Rolls-Royce Motors Limited 1977
February 1977
T.S.D. 4200

Warning lamps and instruments

Component location
(instruments)
Fig. M25

Printed in England
© Rolls-Royce Motors Limited 1980
February 1980
T.S.D. 4

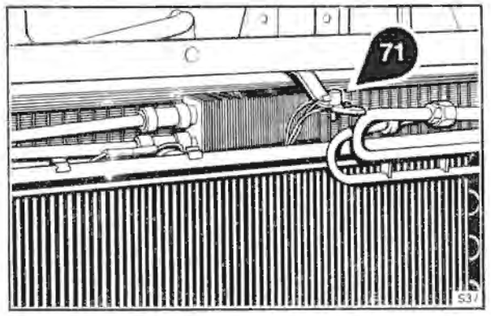

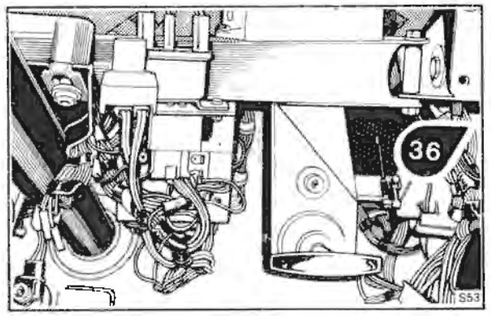

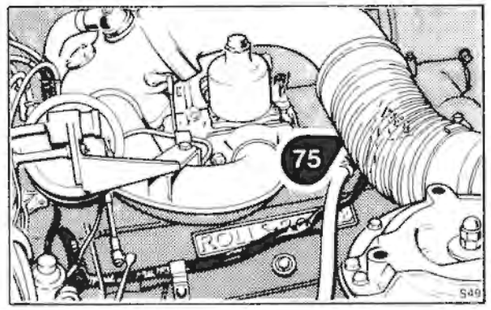

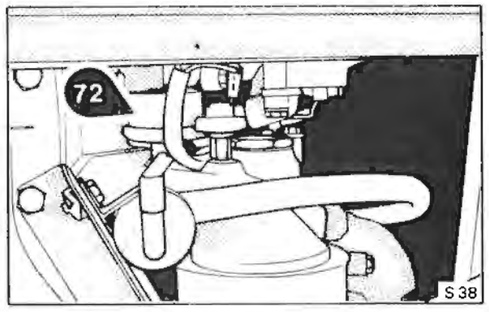

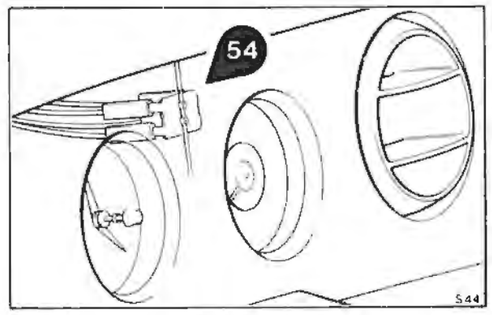

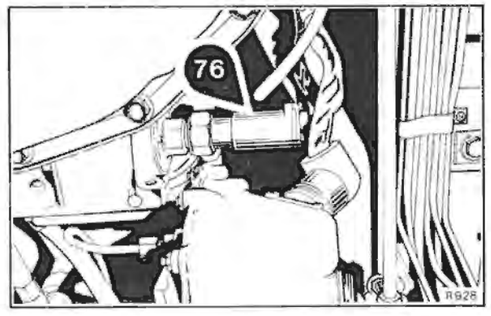

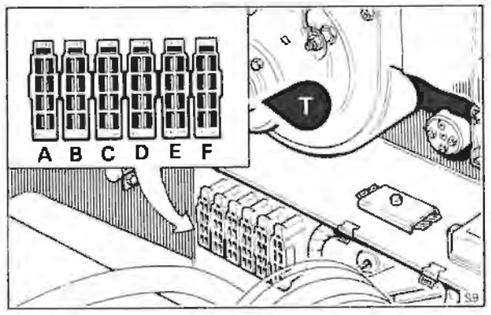

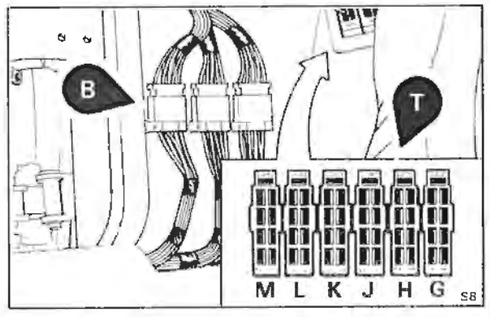

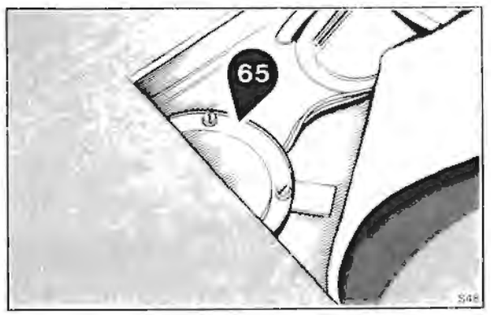

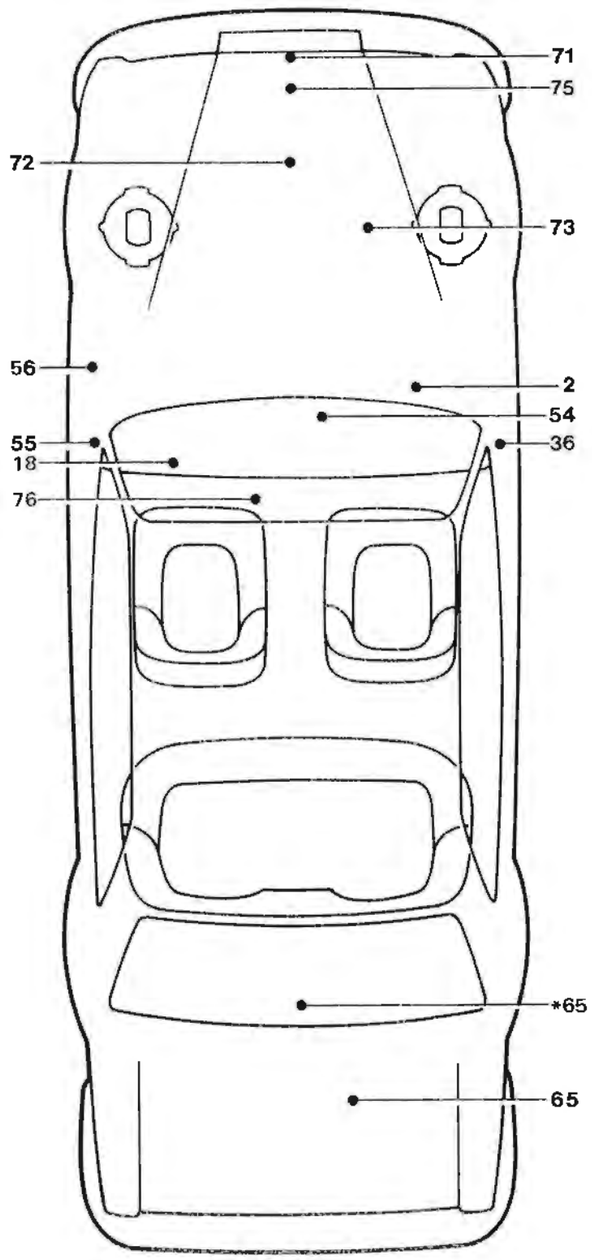

Components

2	Ammeter shunt
4a	Ammeter
4b	Oil pressure
4c	Fuel/Oil contents
4d	Coolant temperature
17	Fuseboard
18	Petrol pumps relay
36	Right-hand 'A' post earth
54	Instrument panel earth
55	Left-hand 'A' post earth
56	Left-hand valance earth
65	Fuel tank unit
66	Clock
67	Front cigar lighter
68	Left-hand rear cigar lighter
69	Right-hand rear cigar lighter
70	Outside temperature gauge
71	Outside temperature sensor
72	Oil pressure transmitter
73	Oil sump unit
74	Fuel/Oil changeover switch
75	Coolant temperature transmitter
76	Speed generator
77	Speedometer
78	Main beam warning lamp
B	Body sockets
T	Toeboard sockets
*	All left-hand drive

Warning lamps and instruments

Schematic wiring diagram (instruments)

From car serial numbers SRX 33872, LRX 32024, DRX 32635 and JRX 31962 the positive feed to the speedometer is indicated by a dotted line on the diagram

Fig. M26

S.34
Printed in England
© Rolls-Royce Motors Limited 1980
February 1980
TSD

 © Rolls-Royce Motors Limited 1980

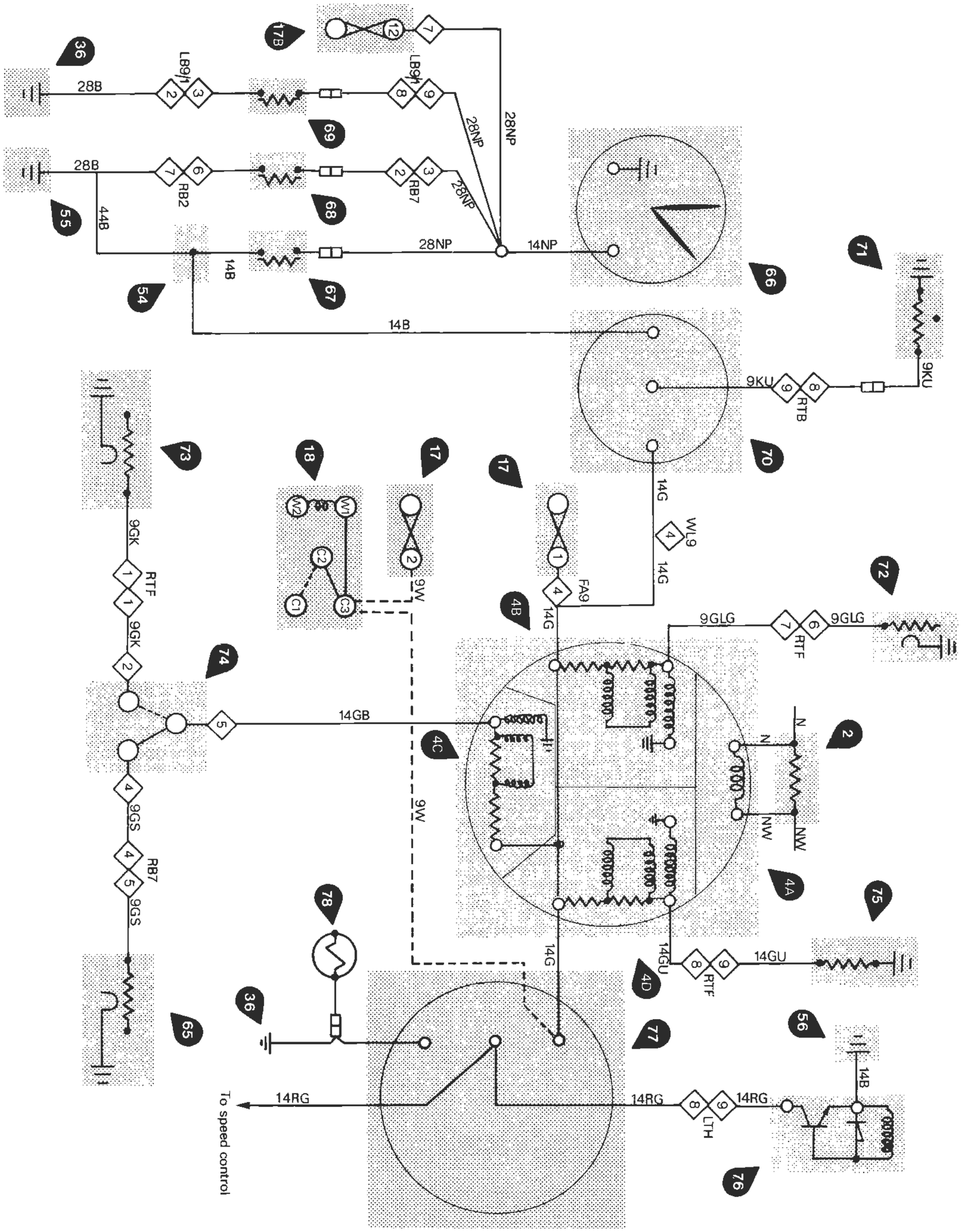

Warning lamps and instruments

Component location
(washer fluid and coolant levels)
Fig. M27

Printed in England
© Rolls-Royce Motors Limited 1977
February 1977
T.S.D. 4200

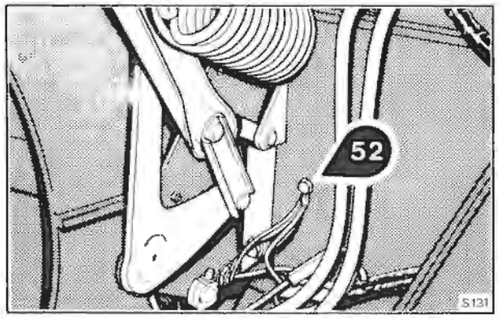

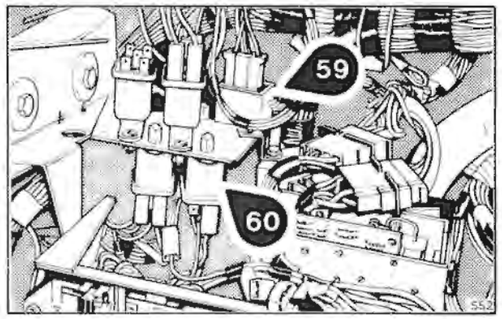

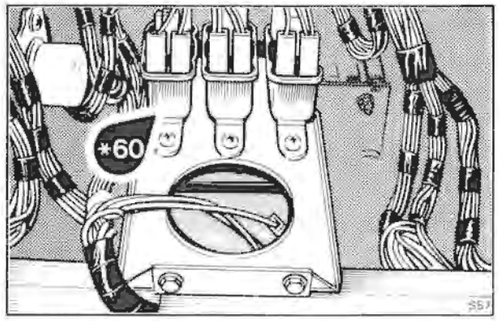

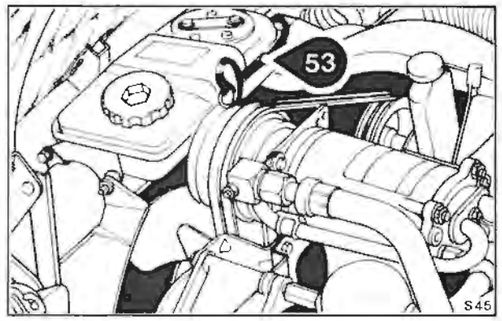

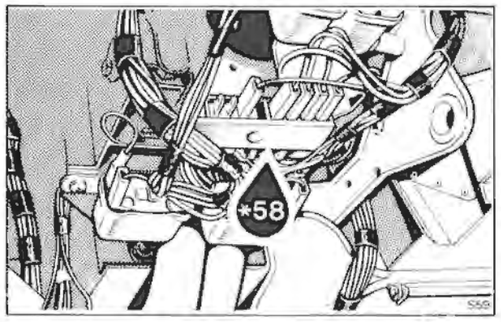

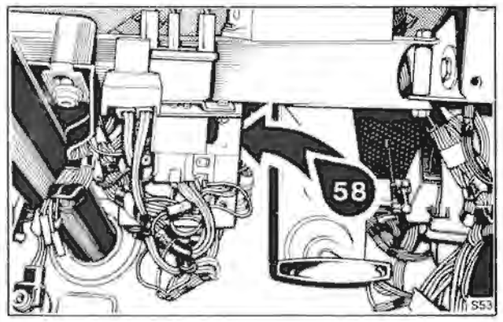

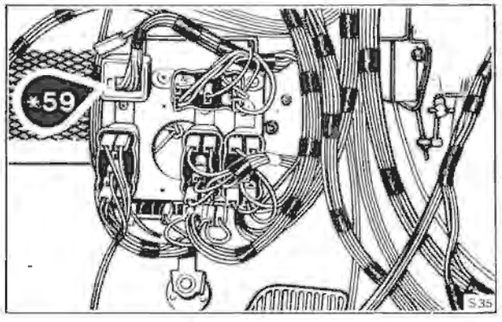

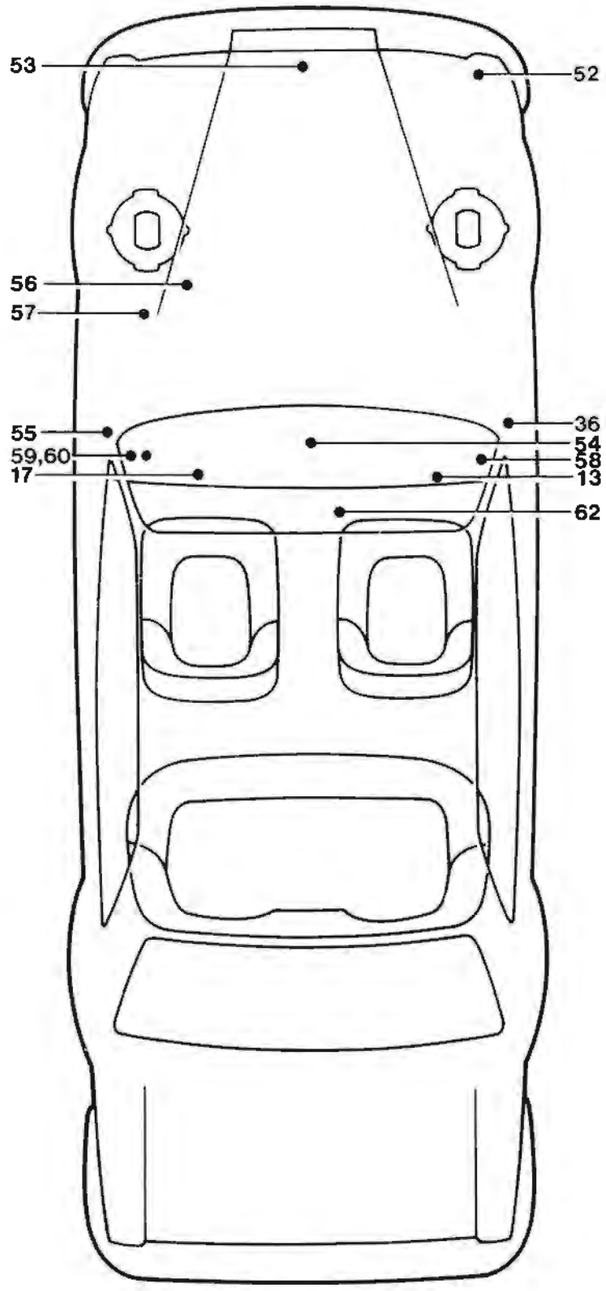

Components

11	Column neutral start switch
13	Starter switch
17	Fuseboard
36	Right-hand 'A' post earth
49	Warning lamps test circuit
51	Warning lamps cluster
52	Right-hand front earth
53	Coolant level probe
54	Instrument panel earth
55	Left-hand 'A' post earth
56	Left-hand valance earth
57	Washer bottle probe
58	Diode block
59	Washer fluid level amplifier
60	Washer fluid level relay
62	Washer switch

* All left hand drive

Warning lamps and instruments

Schematic wiring diagrams
(washer fluid Fig. M28
and coolant levels Fig. M29)

S 32
Printed in England
© Rolls-Royce Motors Limited 1977
February 1977
T.S.D. 46

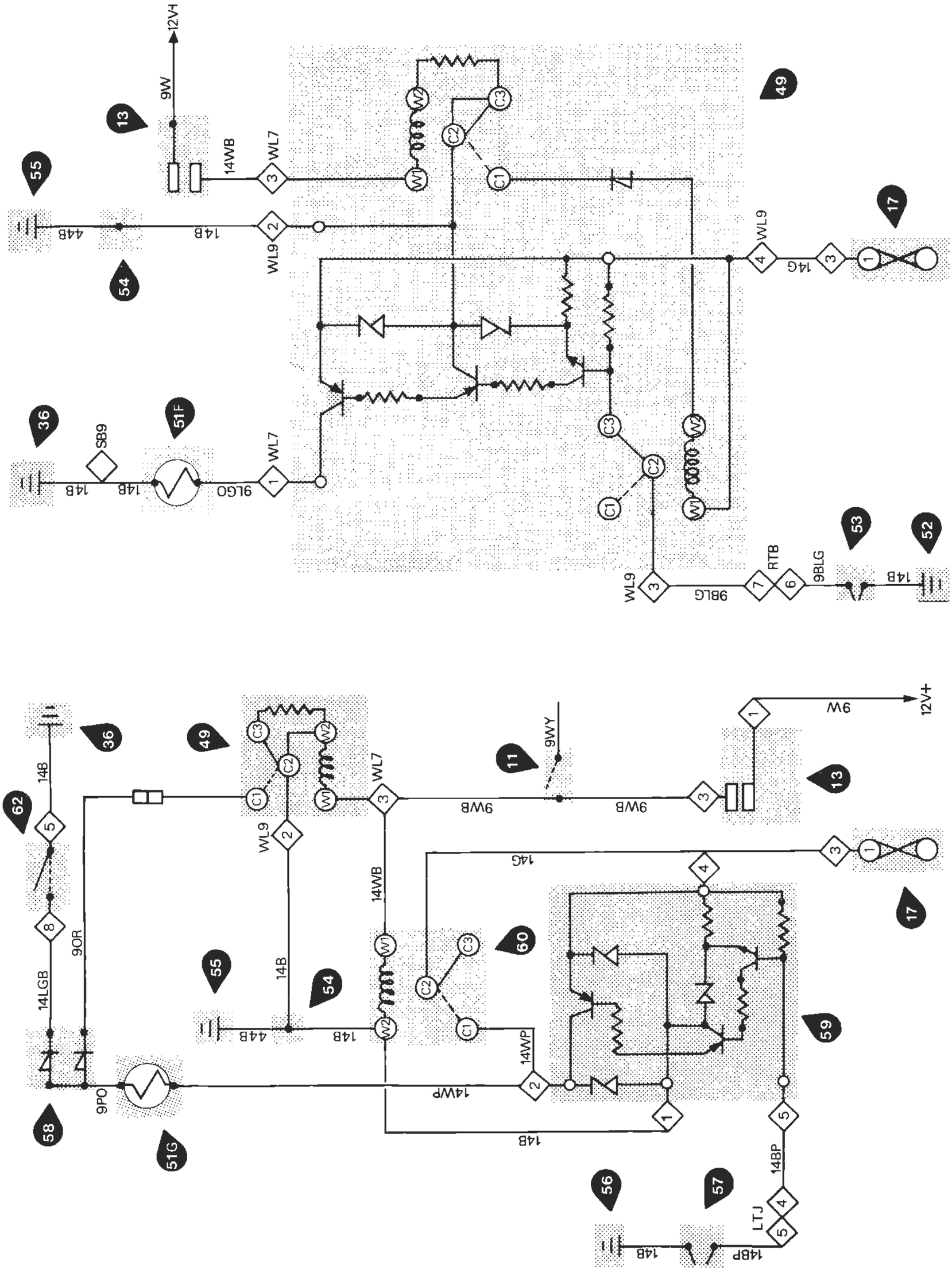

Fig. M28

February 1977
© Rolls-Royce Motors Limited 1977
Printed in England

Warning lamps and instruments

Component location
(ice warning and low fuel)
Fig. M30

Printed in England
© Rolls-Royce Motors Limited 1977

February 1977
T.S.D. 4200

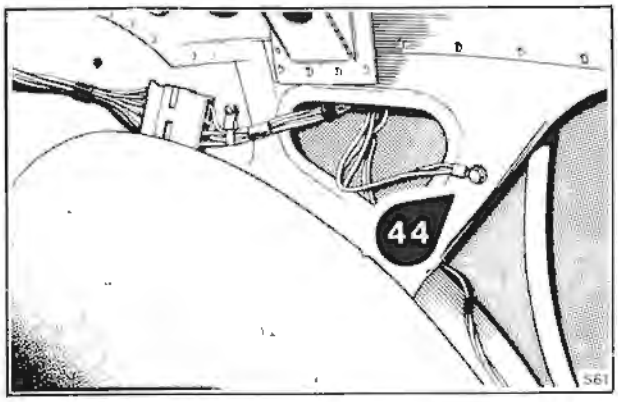

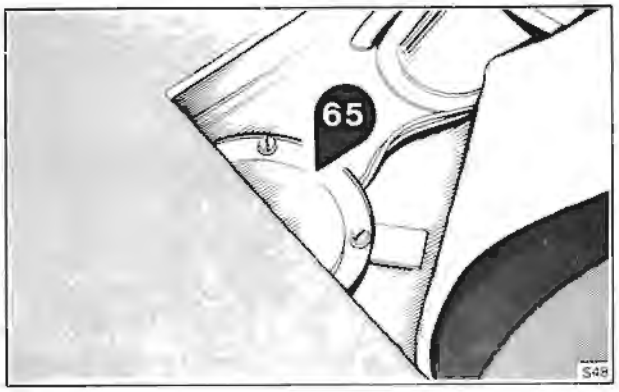

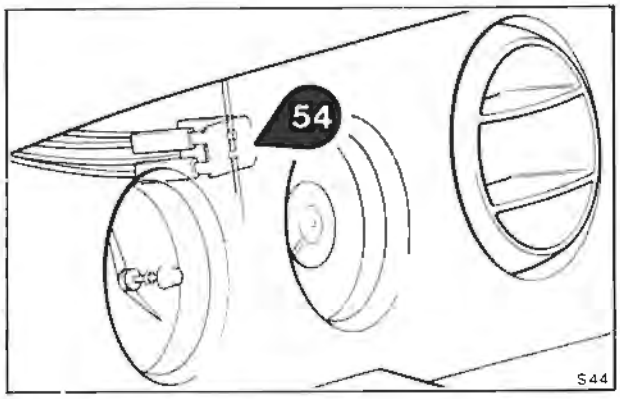

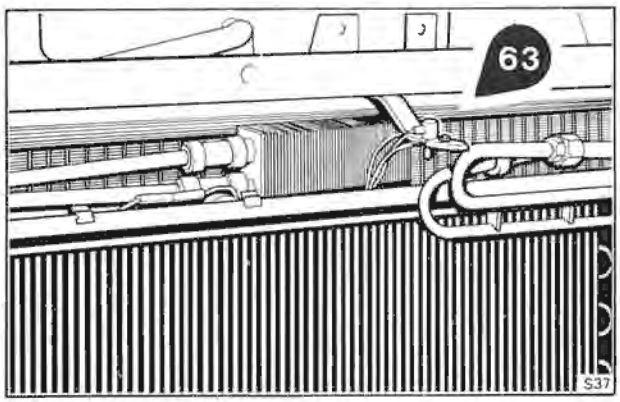

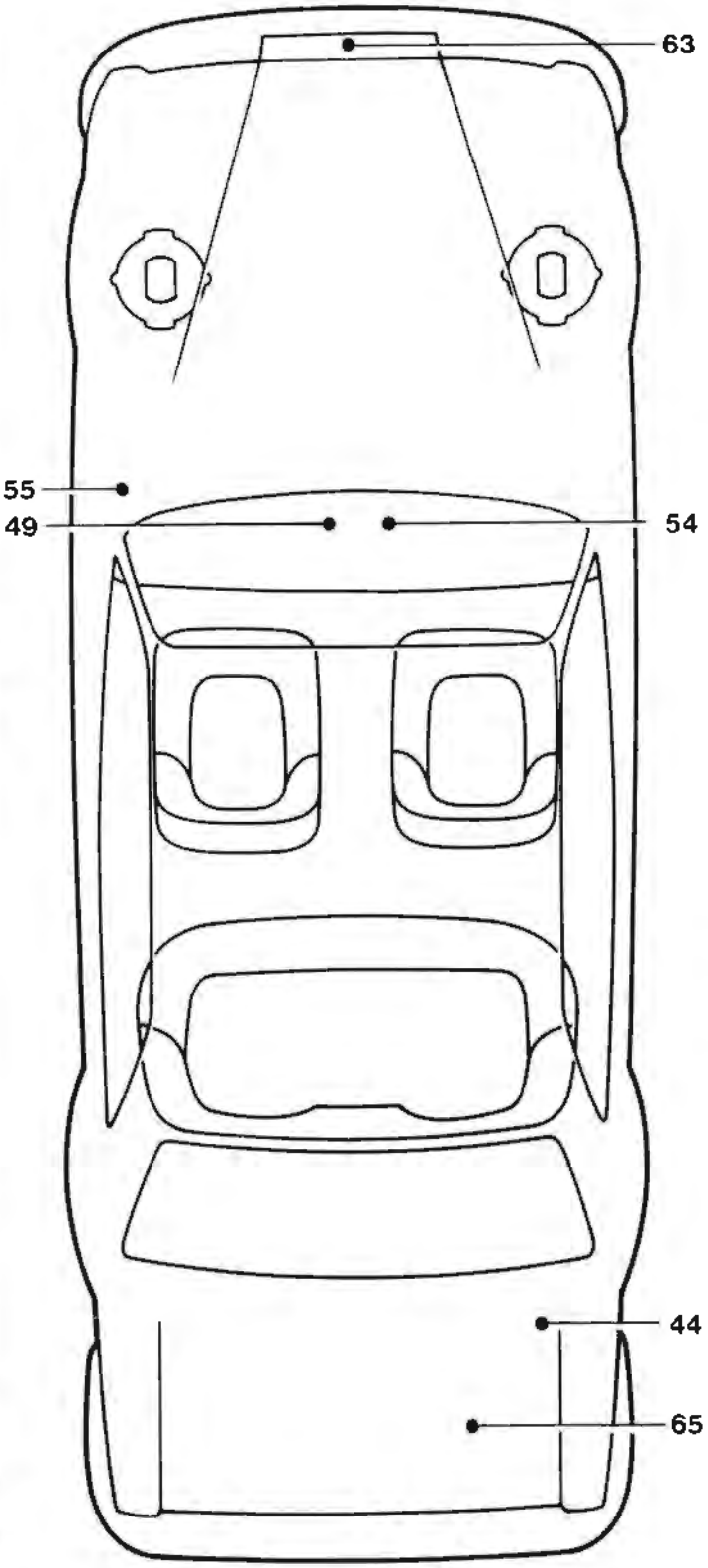

Components

13	Starter switch
17	Fuseboard
44	Right-hand boot earth
49	Warning lamps test circuit board
51J	Ice warning
51K	Low fuel
54	Instrument panel earth
55	Left-hand 'A' post earth
63	Ice warning sensor
65	Fuel tank unit

Warning lamps and instruments

Schematic wiring diagram
(ice warning and low fuel)
Fig. M31

Printed in England

© Rolls-Royce Motors Limited 1977

February 1977

T.S.D. 4200

© Rolls-Royce Motors Limited 1977

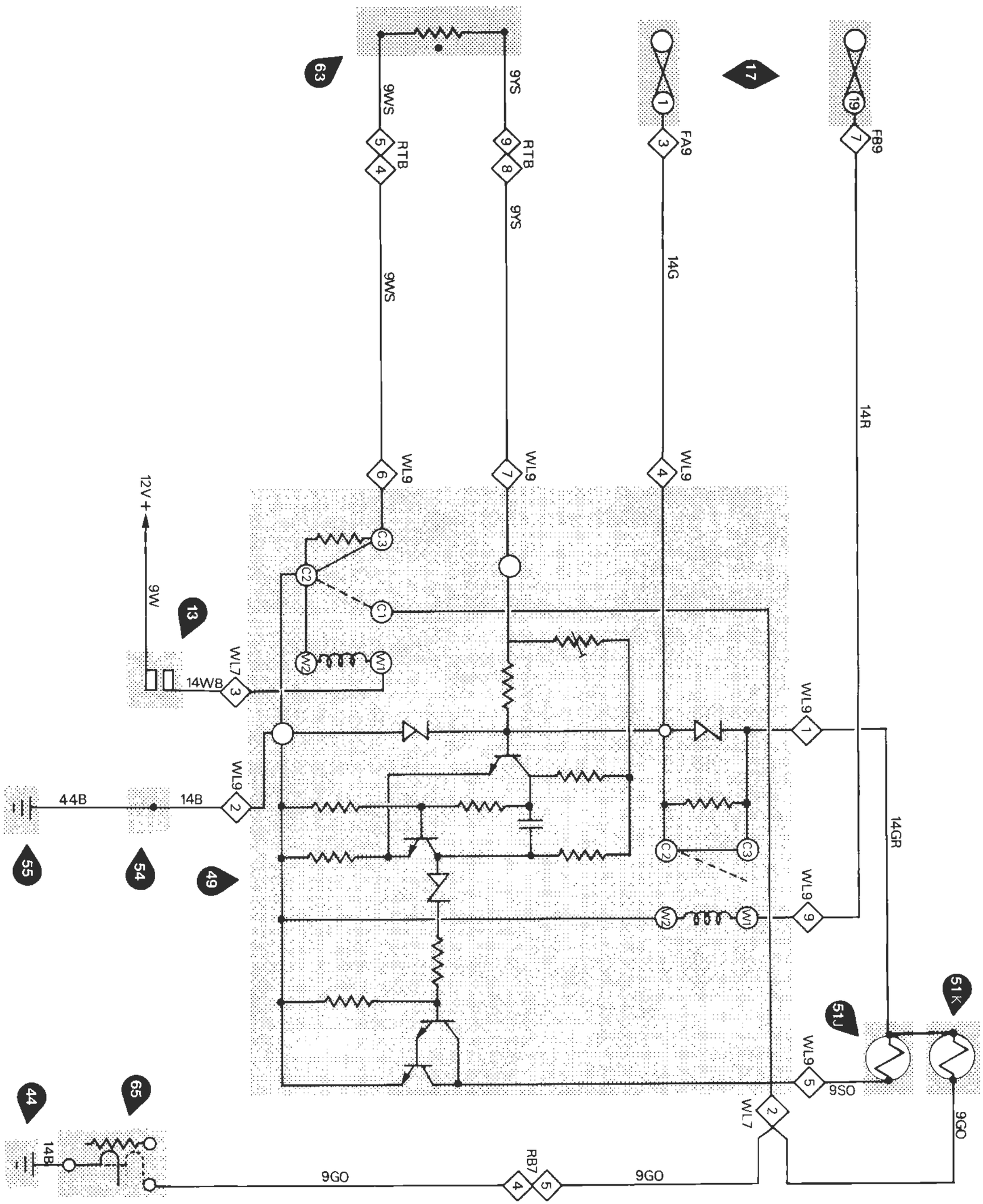

Warning lamps and instruments

Component location
(remaining warning lamps)
Fig. M32

Printed in England
© Rolls-Royce Motors Limited 1977
February 1977
T.S.D. 4200

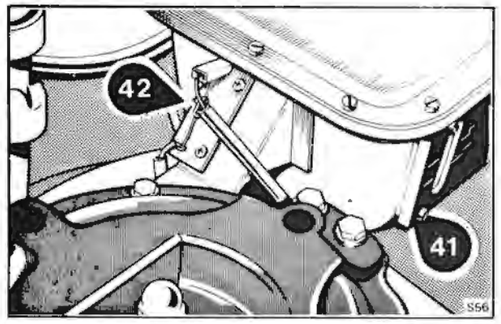

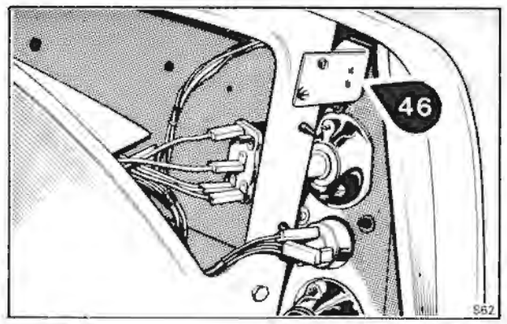

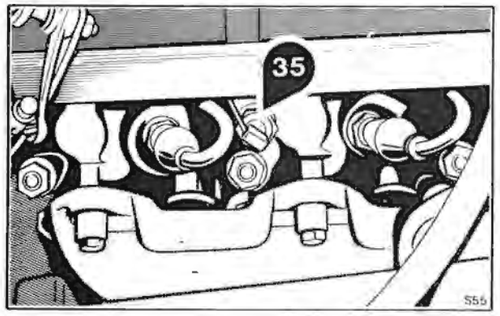

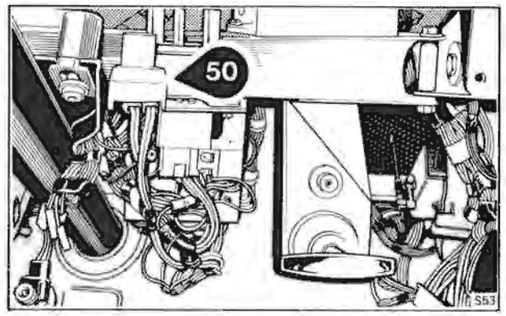

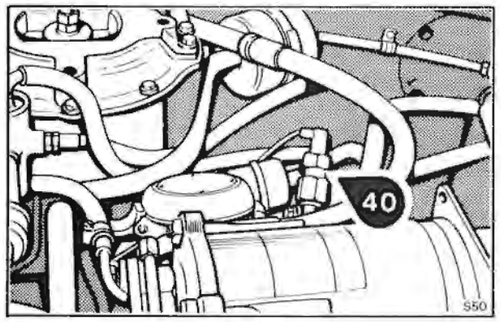

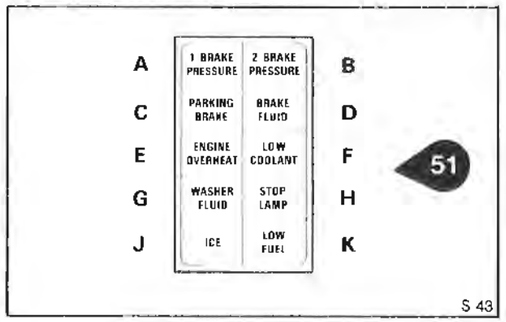

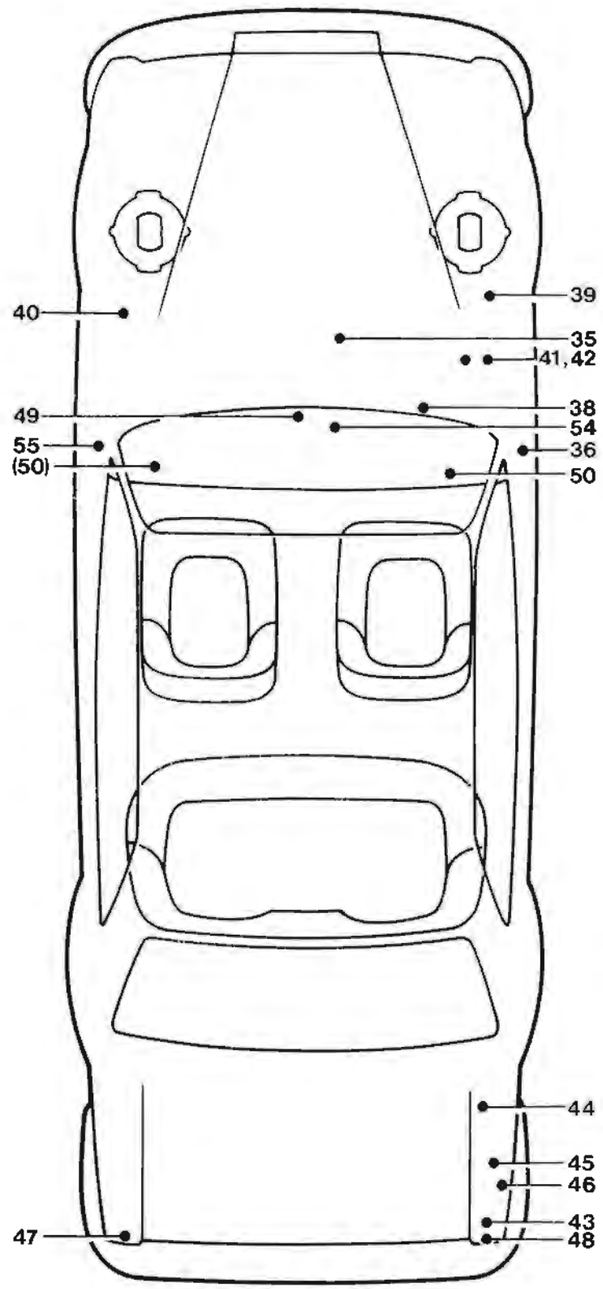

Components

13	Starter switch
17	Fuseboard
35	Engine overheat switch
36	Right-hand 'A' post earth
37	Parking brake switch
38	Stoplamp switch
39	Right-hand brake pressure switch
40	Left-hand brake pressure switch
41	Brake fluid level switches
42	Brake fluid level resistor
43	Right-hand rear lamp cluster
44	Right-hand boot earth
45	Rear window demist relay
46	Stoplamp failure relay
47	Left-hand stoplamp
48	Right-hand stoplamp
49	Warning lamps test circuit
50	Engine overheat buzzer
51	Warning lamps cluster
54	Instrument panel earth
55	Left-hand 'A' post earth

S 40

Warning lamps and instruments

Schematic wiring diagram
(remaining warning lamps)
Fig. M33

Printed in England

© Rolls-Royce Motors Limited 1977

February 1977

T.S.D. 4200

© Rolls-Royce Motors Limited 1977

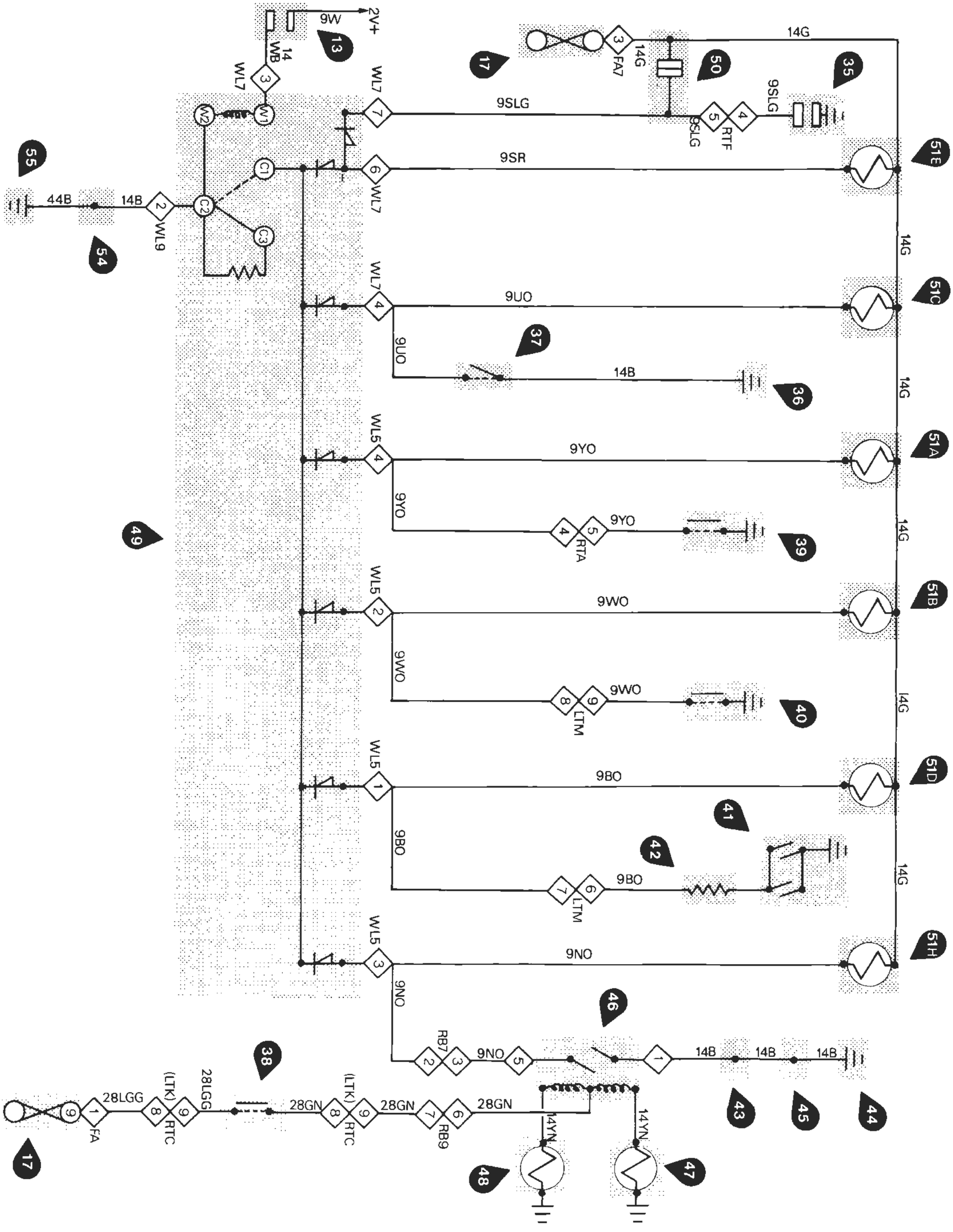

Section M5

Speed control
Contents

	Page
Introduction	M5 - 3
System operation	M5 - 3
Speed generator	M5 - 3
Speed control bellows (actuator)	M5 - 3
Speed control unit	M5 - 3
Speed control relay	M5 - 3
Speed control switch	M5 - 4
Speed control - Fault diagnosis	M5 - 5
Speed control - Fault diagnosis for complete system failure	M5 - 7
Component location	M5 - 11
Schematic wiring diagram	M5 - 13

Printed in England
© Rolls-Royce Motors Limited 1980
February 1980
T.S.D. 4200

Section M5

Speed control

Introduction
The speed control system consists of four major items; a speed generator, electronic control unit, vacuum actuator (bellows) and control switch. In addition, the stoplamp switch switches the control unit off when the footbrake is applied.

System operation
The output frequency from the generator, (which is an integral part of the electronic speedometer system), is directly proportional to road speed and is connected to the control unit, speedometer and overspeed warning unit (if fitted). It must be noted that there will not be any output from the speed generator if the speedometer is disconnected or faulty.

When the speed control switch is set to ON, the control unit converts the generator output frequency to a voltage which it stores in its memory when the SET button is depressed.

The control unit then compares the output voltage with the voltage in the memory and if there is a difference, it signals the bellows to correct the car speed accordingly.

Speed generator
The speed generator is mounted on the gearbox in what was formerly the speedometer cable take-off position.

Speed generator - To remove
1. Disconnect the two Lucar connectors and unclip the cable.
2. Remove the knurled gearchange actuator plug.
3. Unscrew the hexagon nut securing the speed generator and withdraw the generator taking care not to bend the drive-shaft.

Speed control bellows (actuator)
The actuator consists of convoluted rubber bellows with two metal end plates, one being attached to the engine and the other to the throttle linkage with a chain. An operating solenoid is fitted to the fixed end-plate which also has an air bleed and vacuum valve.

When the solenoid is energised, it closes the air bleed and opens the vacuum valve which connects inlet manifold depression to the bellows causing it to collapse. With the solenoid unenergised, the air bleed is open to atmosphere and the vacuum valve is closed.

Bellows - To remove and fit
1. Disconnect the Lucar connectors and also remove the rubber tube.
2. Remove the long bolt and spacer which fixes the bellows to the two mounting brackets. Support the bellows when removing the bolt then unhook the chain from the bellows.
3. When fitting the bellows, the chain must be set to give one ball of slack.

Speed control unit
The speed control unit converts the generator frequency output to a voltage which it then compares with a voltage which was stored in its memory when the SET button was depressed. If there is a difference in voltage, the control unit signals the bellows to correct the car speed accordingly.

Depressing the accelerator pedal will override the speed control unit (e.g. for overtaking) and when the pedal is released the speed control unit will then adjust the car speed to the previously selected speed. When the footbrake pedal is operated, the stoplamp switch connects 12v + to the control unit which is again overridden. Setting the speed control switch to RES (resume) will instruct the control unit to restore the car speed to the previously set speed, provided that the speed exceeds the low speed lockout value of 8 to 48 k.p.h. (5 to 30 m.p.h.).

When the speed control switch is switched on, the memory is erased.

Speed control unit - To remove
1. Disconnect the battery.
2. Remove the top roll.
3. Remove the switchbox
4. Disconnect the connector which is attached to the top of the control unit.
5. Remove the screws securing the control unit and lift out the unit.

Speed control relay
The speed control relay is a Lucas 6RA and is fitted near the speed control unit behind the facia.

Relay - To test
1. Disconnect all cables from the relay.
2. Connect C2 to W1 and the negative side of a battery.
3. Connect a test lamp between C3 and the

Printed in England
© Rolls-Royce Motors Limited 1980
February 1980
T.S.D. 4200

positive side of the battery, observe that the test lamp is lit.
4. Connect W2 to the positive side of the battery and verify that the test lamp is extinguished.
5. Remove the test lamp from C3 and connect it to C1, the lamp should light.
6. Disconnect W2 from the positive supply and verify that the test lamp is extinguished.

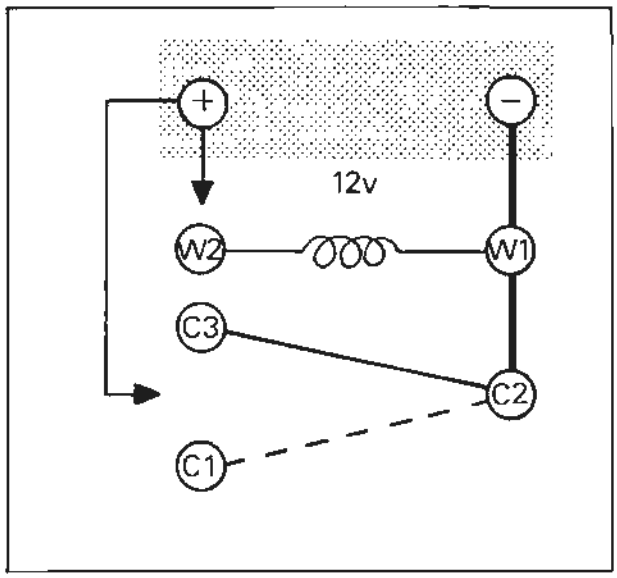

Fig. M34 Speed control relay test circuit

Speed control switch

The switch is mounted on the gear selector lever and comprises a slide switch marked OFF, ON and RES and a push-button market SET.

Moving the slide switch to ON activates the system, depressing the SET button will then set the cruising speed as desired. To resume cruising at a previously selected speed after braking, the slide switch is set to RES (against spring pressure).

Holding in the SET button causes the car speed to increase.

Section M5

Speed control Fault diagnosis

Malfunction	Possible cause	Action
Car speed surges by 1 to 2 m.p.h. around set speed	Speed generator faulty	Fit new generator.
Harsh engagement when cruise speed is set	Excessive slack in chain between bellows and throttle lever	Chain should have one ball of slack without causing the carburetter flap to open.
Cruise speed inaccurate by more than 1½ k.p.h. at 80 k.p.h. (1 m.p.h. at 50 m.p.h.)	As above	As above
	Accelerator linkage lever length incorrect between actuator and carburetter butterfly	Reset linkage
	Control box faulty	Fit new control box
Complete system failure.	Failure in wiring systems, vacuum line or speed signal output	Refer to page M5 - 7

Printed in England
© Rolls-Royce Motors Limited 1980

Section M5

Speed control fault diagnosis for complete system failure

Sheet 1 of 2

Printed in England

© Rolls-Royce Motors Limited 1980

February 1980

TSD 4200

Does the speedometer operate?

YES

NO

Dependent upon the wiring of the speed control system (see Fig. M36) check either fuse 1 or fuse 2.
Is the fuse intact?

YES

NO

If a fuse has failed check the 'Warning lamps' and instruments' circuit using the diagram shown in Figure M26.
Rectify the fault and retest the system.

1. Check that there is a 12 volts positive ignition feed at the speedometer.
2. Check that there is a good earth at both the speedometer and the speed signal generator.
3. Using a meter (generator type meters such as the 'Megger' must **not** be used as damage to the electronic circuitry would occur) measure the continuity of the red/green cable from the speedometer to the speed signal generator.

If an open circuit condition exists disconnect the meter and rectify the fault. Then, carry out Operation 5.

4. If Operations 1 to 3 inclusive prove satisfactory it will be necessary to substitute the speed signal generator.
5. Road test the system.

If the speedometer is still inoperative the speedometer must be replaced and the system road tested again.

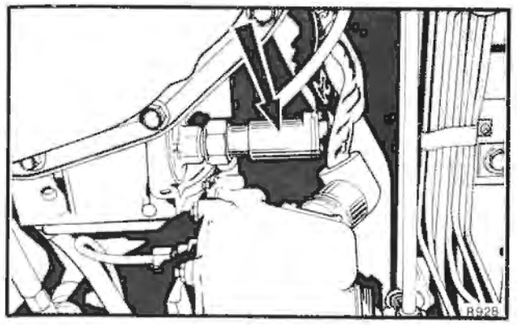

Speed signal generator

Check the condition of fuse 9.
Is the fuse intact?

YES

NO

The circuits controlled by fuse 9 include the speed control system. If the cause of the fuse failure is proven to be in the speed control system, rectify the fault using the diagram shown in Figure M36 and then road test the system.
Does the system operate correctly?

NO

YES

No further action is required.

Visually inspect the bellows actuator electrical connections, the vacuum pipe and connections, also the bellows throttle chain linkage.

If no obvious fault exists the bellows actuator should be tested as follows.

1. Ensure that the gear range selector lever is in the Park position and that the gear change isolator is removed.
2. Disconnect both cables from the bellows actuator. On single solenoid actuator connect the red cable to a good earth. Similarly, on double solenoid actuators connect the yellow/black cable to a good earth.
3. Start the engine and momentarily open the engine throttles by briefly touching the remaining cable (blue cable for single solenoids; yellow/white for double solenoids) to a positive 12 volts supply.

If the throttles do not open this indicates that the bellows actuator solenoids are faulty and must therefore be renewed.

Important

When touching the 12 volts positive supply to either the blue or yellow/white cables care should be taken not to overspeed the engine by connecting the cables for too long a period.

Incorrect connection of the cables will result in permanent damage to the electronic circuits.

4. Switch off the engine.
5. Rectify any fault and then road test the speed control system.

Does the system operate correctly?

YES

NO

Continued on sheet 2

No further action is required.

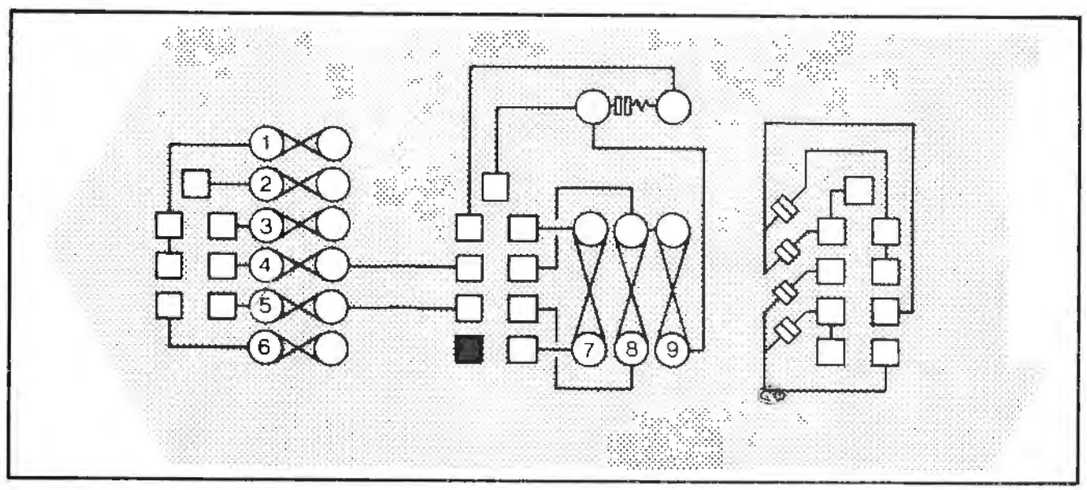

Fuseboard A

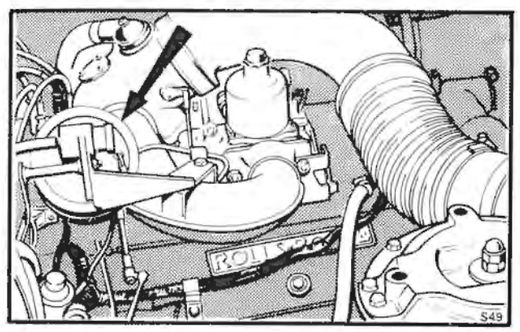

Bellows actuator assembly

Section M5

Speed control fault diagnosis for complete system failure

Sheet 2 of 2

Printed in England

© Rolls-Royce Motors Limited 1980

November 1980

TSD 4200

Continued from sheet 1

1. Disconnect the electronic control unit plug and socket.
2. Check the wiring systems by testing the appropriate pins of the loom plug in the following sequence.
3. Using the meter measure the continuity of the green/blue link cable at the loom plug (see Fig. M35).
4. Connect a 12 volt 2.2 watt test lamp between one of the green/blue cables at the loom plug and a good earth.
5. Switch on the ignition. Move the gear range selector lever to each gear position and observe the test lamp.

In the Park, Reverse and Neutral positions the test lamp should be extinguished; in the Drive, Intermediate and Low positions the lamp should illuminate.
6. Switch off the ignition.
7. If tests 2 to 6 inclusive are satisfactory proceed to Operation 9.
8. If the test lamp does not illuminate in the Low, Intermediate and Drive positions and fuse 9 is intact, rectify the open circuit which exists between fuse 9 and the electronic control unit. This circuit runs via the micro-switches in the transmission actuator (see Fig. M36).
9. Switch off the ignition.
10. Connect the test lamp between the blue/black cable at the loom plug (see Fig. M35) and a positive 12 volts ignition supply.
11. Switch on the ignition and with the speed control switch in the OFF position, ensure that the lamp does not illuminate.
12. Move the switch to the ON position and check if the lamp illuminates.
13. Move the switch to the RES (resume) position and check if the lamp illuminates.
14. If Operations 11 to 13 inclusive do not reveal a fault, switch off the ignition and proceed to Operation 18.
15. If in Operations 12 and 13 the lamp does not illuminate and fuse 9 is intact,there is either an open circuit in the blue/black cable which must be rectified or the speed control switch is faulty and must therefore be renewed.
16. If in Operation 11 the test lamp illuminates there is a short circuit between the blue/black cable and earth.
17. Switch off the ignition rectify the fault and disconnect the test lamp.
18. Connect the test lamp between the green/brown cable at the loom plug (see Fig. M35) and a good earth.
19. Switch on the ignition and check to ensure that the lamp does not illuminate.
20. Depress the brake pedal and check that the lamp illuminates.
21. If Operations 19 and 20 are correct, switch off the ignition, disconnect the test lamp and proceed to Operation 24.
22. If in Operation 19 the lamp illuminates there is either, a short circuit between the green/brown cable and a positive feed or the brake lamps switch has failed in the closed position.

Switch off the ignition and rectify the fault,
23. If in Operation 20 the test lamp does not illuminate and fuse 9 is intact, there is an open circuit between the brake lamps switch feed and the green/brown cable at the loom plug.

Switch off the ignition and rectify the fault.
24. Connect the test lamp between the blue/purple cable at the loom plug (see Fig. M35) and a positive 12 volts ignition supply.
25. With the gear range selector lever in a forward gear position and the speed control switch in the OFF position, switch on the ignition and observe the test lamp.

If the lamp illuminates proceed to Operation 28.
26. Press the SET button of the speed control switch and check the test lamp.

If the lamp illuminates proceed to Operation 29.
27. Release the SET button, move the speed control switch to the Resume position and check the test lamp.

If the lamp does not illuminate proceed to Operation 30. If the lamp does illuminate proceed to Operation 31.
28. Illumination of the test lamp indicates that there is either a short circuit between the blue/purple cable and earth, a short circuit between the blue/brown cable from the relay to the speed control switch and earth or the speed control switch has failed with the Resume contacts permanently closed.

Rectify the fault and continue the test procedure at Operation 26.
29. Illumination of the test lamp indicates that there is either a short circuit to earth on the blue/white cable connecting the relay to the speed control switch, a faulty relay, or the speed control switch is faulty providing a constant earth path to the blue/white cable.

Rectify the fault and continue the test proceedure at Operation 27.
30. Check fuse 9. If it is intact, there is either an open circuit in the blue/brown cable from the relay to the speed control switch or the Resume contacts of the switch have failed.

Rectify the fault and continue the test procedure at Operation 32.
31. With the speed control switch in the ON position, check the test lamp.

If the test lamp illuminates there is a short circuit between the Resume and ON contacts of the speed control switch.

Rectify the fault, switch off the ignition and disconnect the test lamp.
32. Move the speed control switch to the OFF position, connect the test lamp between the blue/yellow cable at the loom plug (see Fig. M35) and a positive 12 volts ignition supply.
33. Switch on the ignition and check the test lamp.

If the lamp illuminates proceed to Operation 36.
34. Press the SET button of the speed control switch and check that the test lamp illuminates.

If the lamp does not illuminate proceed to Operation 37.
35. Switch off the ignition and disconnect the test lamp.
36. Illumination of the test lamp indicates that there is a short circuit between the blue/yellow cable and earth.

Rectify the fault and continue the test procedure at Operation 34.
37. If the lamp does not illuminate, then either the relay contacts are open circuit or the blue/yellow cable from the control unit to the relay is open circuit.

Rectify the fault, switch off the ignition and d sconnect the test lamp.
38. Disconnect the two loom cables from the speed control bellows actuator and join them together. Disconnect the black/green cable from the WI connection of the speed control inhibit relay.
39. Connect the test lamp between the blue/green cable at the loom plug (see Fig. M35) and a good earth.
40. With the gear range selector lever in the Park position, switch on the ignition and observe the test lamp.

If the lamp illuminates there is a fault in the transmission actuator circuit.

Rectify the fault using the diagram shown in Figure M98.
41. Move the selector lever to the Drive position and check to ensure that the lamp does illuminate.

If the lamp does not illuminate there is either an open circuit in one of the bellows actuator cables or the brake lamps switch is faulty.

Rectify any fault and continue the test procedure
42. Depress the brake pedal and ensure that the test lamp is extinguished.

If the lamp remains illuminated there is either a short circuit between the green and green/blue cables to the breke lamps switch or the brake lamps switch is sticking, although the latter fault should have been revealed in Operation 20.
43. Reconnect the black/green cable to the WI connection of the inhibit relay. The test lamp should be extinguished.

If the test lamp remains illuminated, ensure that there is a 12 volts positive feed to the W2 connection of the inhibit relay. Then test the continuity of the black/green cable from the W1 connection of the inhibit relay to the top gear switch connection situated on the gearbox housing. Ensure that the relay operates correctly.

If these checks prove satisfactory and the test lamp remains illuminated, the top gear switch has failed and must therefore be rectified.

Switch off the ignition, reconnect the bellows actuator and disconnect the test lamp.
44. Ensure the continuity of the red/green cable from the speed signal generator to the electronic control unit.
45. If the preceding tests have not revealed a fault subsitute the electronic control unit with a proven replacement and retest the system.

Printed in England
© Rolls-Royce Motors Limited 1980
November 1980
TSD 4200

Speed control

Component location
Fig. M35

Printed in England
© Rolls-Royce Motors Limited 1980

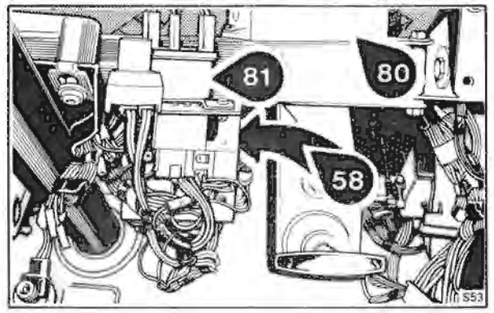

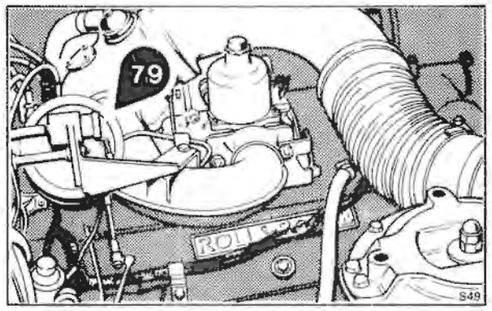

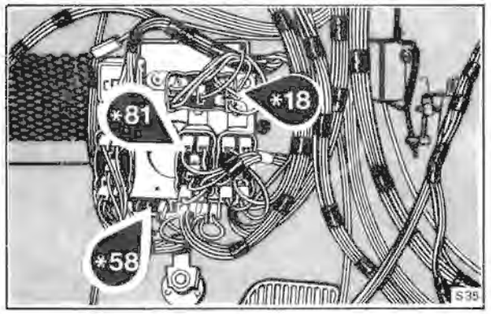

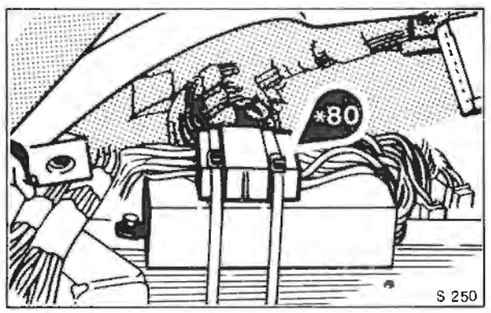

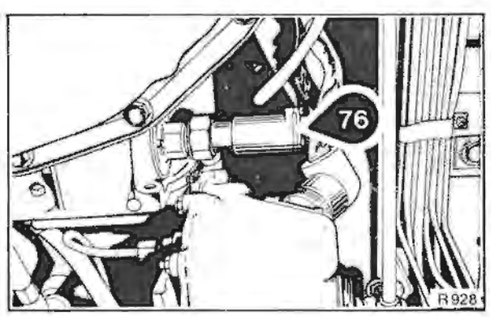

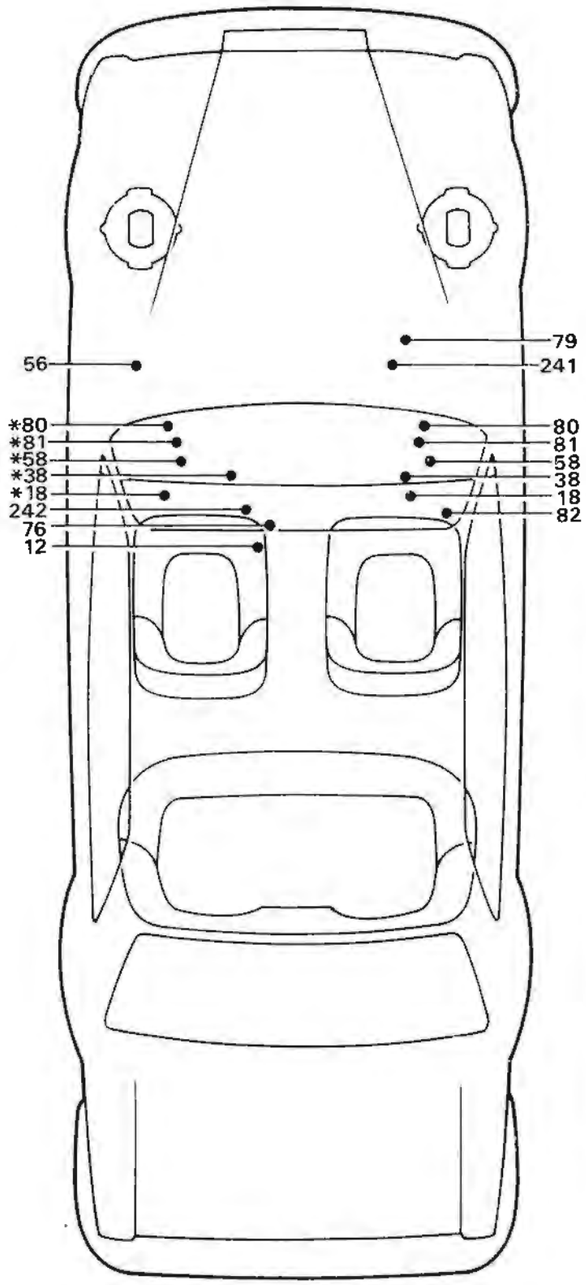

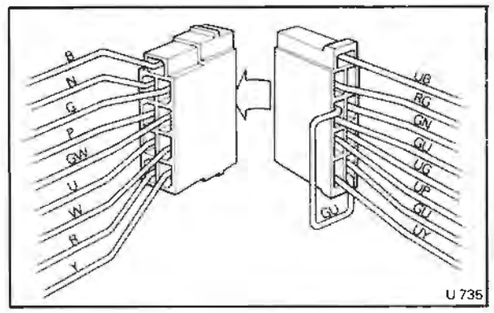

Electronic control unit plug and socket

Connector code

DI P	Direction Indicator switch plug and socket
EL C	Engine loom connection
FA	Fuseboard 'A' plug
GC P	Gearchange actuator plug and socket
LT K	Left-hand toeboard socket K
RT A	Right-hand toeboard socket A
RT C	Right-hand toeboard socket C
RA B	Right-hand 'A' post body plug
SC PS	Speed control electronic unit plug and socket
SCS P	Speed control switch plug and socket
VL PS	Valance loom plug and socket

Components

4	4-in-1 instrument
12	Gearchange actuator
17a	Fuseboard 'A'
18	Petrol pumps relay
36	Right-hand 'A' post earth
38	Stoplamp switch
56	Left-hand valance earth
58	Diode block
76	Speed generator
77	Speedometer
79	Speed control actuator (bellows)
80	Speed control unit
81	Speed control relay
82	Speed control switch
241	Speed control inhibit relay
242	Top gear switch
*	All left-hand drive

Speed control

Schematic wiring diagram
Fig. M36

Printed in England
© Rolls-Royce Motors Limited 1980

© Rolls-Royce Motors Limited 1980

Printed in England

November 1980

TSD 4200

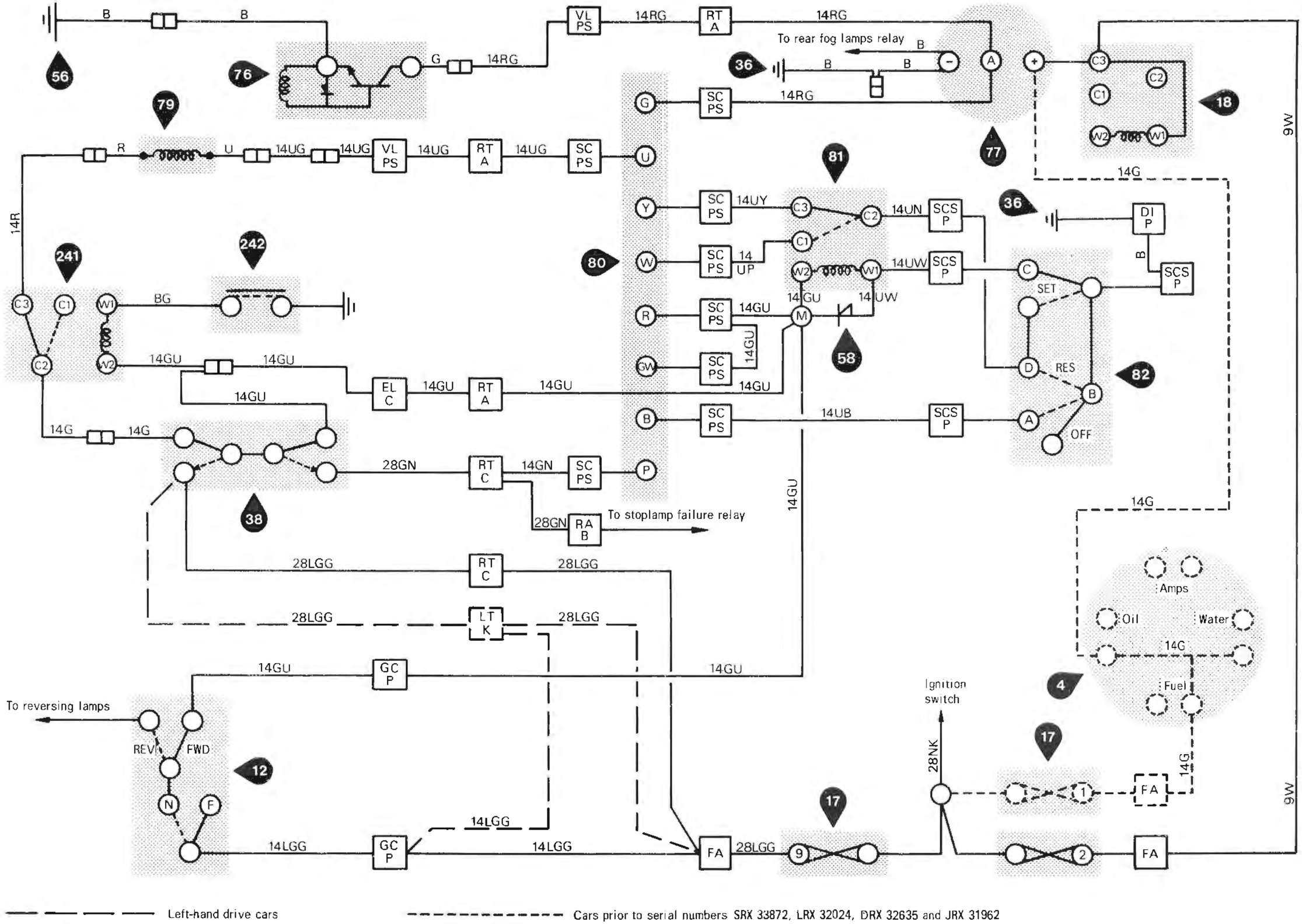

Section M6

Windscreen wipers and washers
Contents

	Page
Introduction	M6 - 3
Windscreen wiper control unit	M6 - 3
Windscreen wiper motor	M6 - 3
Windscreen wiper relays	M6 - 7
Windscreen wiper motor - Camargue	M6 - 8
Windscreen and headlamps washer	M6 - 11
Windscreen wiper blades	M6 - 11
Simplified fault diagnosis	M6 - 13
Fault diagnosis	M6 - 15
Simplified wiring diagrams	M6 - 19
Component layout - Silver Shadow II, Bentley T2, Silver Wraith II, Corniche	M6 - 25
Wiring diagram - Silver Shadow II, Bentley T2, Silver Wraith II, Corniche	M6 - 27
Component layout - Camargue	M6 - 29
Wiring diagram - Camargue	M6 - 31

Printed in England
© Rolls-Royce Motors Limited 1977

April 1977
T.S.D. 4200

Printed in England
© Rolls-Royce Motors Limited 1977

Section M6

Windscreen wipers and washers

Silver Shadow II, Bentley T2, Silver Wraith II, Corniche

Introduction
The main wiring diagram includes both windscreen and headlamp wipers and washers. Other wiring diagrams show interconnections and components used for each wiper switch position. Included with these diagrams is a brief circuit description.

Windscreen wiper control unit
The control unit becomes operative whenever 'Intermittent' is selected or the washer switch is depressed, the sequence of operations is described with the appropriate wiring diagram.

Control unit - To remove
The control unit is mounted on a bracket with relays and other components behind the facia on the right-hand side of the car. On right-hand drive cars it is accessible by removing the knee roll and on left-hand drive cars via the fuseboard compartment.
1. Disconnect the battery.
2. On right-hand drive cars, remove the knee roll.
3. Remove the four bolts securing the mounting bracket and lower the bracket to enable the two screws securing the control unit to be removed. Take care not to inadvertently disconnect any cables from the relays etc.
4. Disconnect the cables from the control unit and withdraw the unit.

Wiper control unit - To test
1. Connect a 12.5 v.d.c. positive supply to terminal 1 and negative to terminal 4.
2. Connect a 6 RA relay type 33222 between terminals 2 and 4 as shown in the test circuit.
3. Connect the light green/black cable to terminal 4 and verify that the relay is energised. Measure the voltage between terminals 1 and 2, this must not exceed 1 volt.
4. Disconnect the light green/black cable from terminal 4. The relay should remain energised for a period of 5 seconds ± 1 second. When the relay has de-energised, the voltage measured between terminals 1 and 2 should not be less than 12.5 volts.
5. Connect terminal 3 to terminal 5 and ensure that the relay is energised. The voltage measured between terminals 1 and 2 must not exceed 1 volt.
6. Connect the yellow/blue cable to terminal 1. At the instant of connection the relay must de-energise and the voltage measured between terminals 1 and 2 must not be less than 12.5 volts.

After a delay of 6 seconds ± 1 second, the relay must energise and the voltage measured between terminals 1 and 2 must not exceed 1 volt.

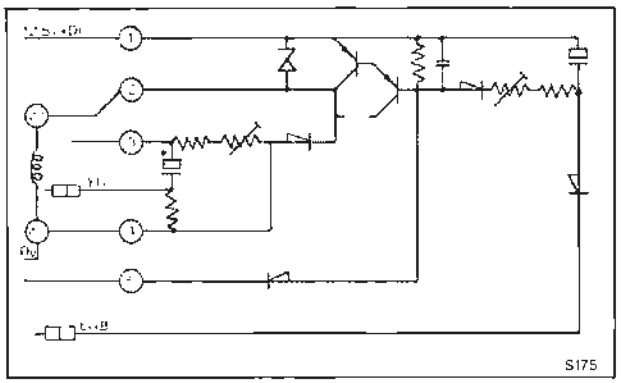

Fig. M37 Wiper control unit test circuit

Windscreen wiper motor
The wiper motor is a Lucas 16W with anti-streak mechanism and 'Park-off screen' facility fitted.

Maintenance - Wiper motor
The motor is of a permanent magnet design and the direction of rotation is dependent upon the polarity of the electrical supply to its terminals. If it becomes necessary to run the motor while it is removed from the car, the negative supply terminal should be connected to terminal 1 and the positive supply to terminal 5 for normal speed and terminal 3 for fast speed. (See Fig. M38).

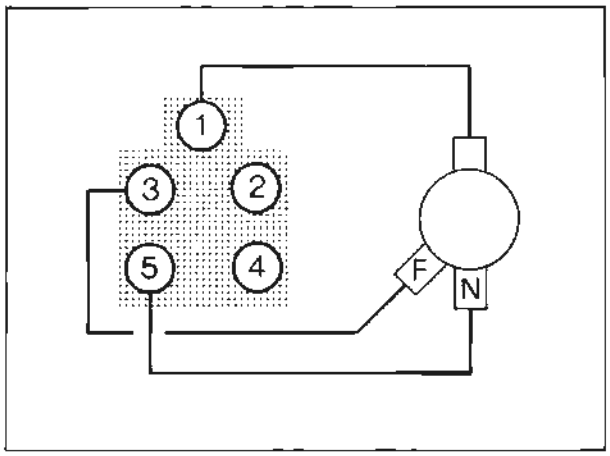

Fig. M38 Wiper motor connections

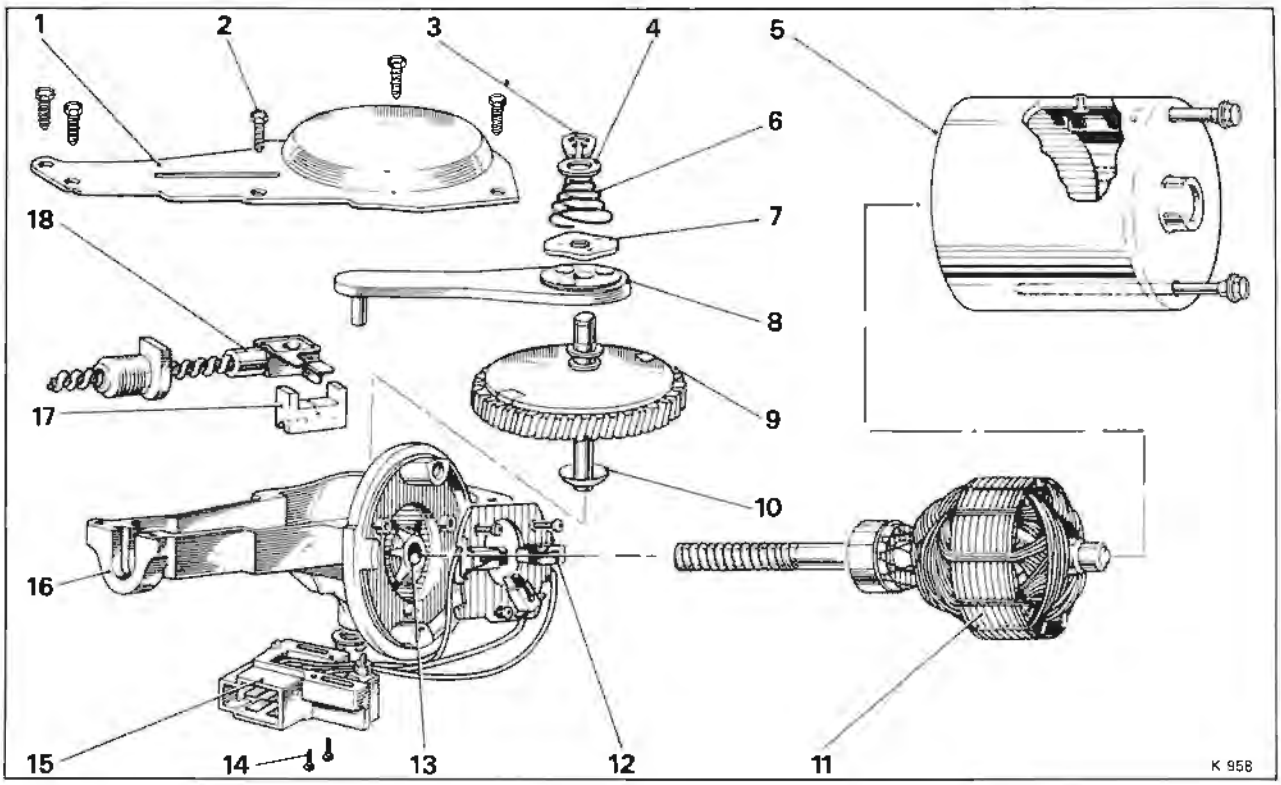

Fig. M39 'Lucas' 16W wiper motor

1	Gearbox cover	7	Friction plate	13	Self-centring bearing
2	Screws	8	Connecting rod	14	Securing screws
3	Circlip	9	Gear	15	Limit switch assembly
4	Washer	10	Dish washer	16	Gearbox
5	Yoke	11	Armature	17	Slider block
6	Spring	12	Brush assembly	18	Cable rack and cross-head

'Lucas' 16 W wiper motor - To remove (see Fig. M39)

1. Disconnect the loom socket from the wiper motor plug.
2. Remove both wiper blades.
3. Release the nut which secures the rack tubing to the wiper motor.
4. Slacken the clip which secures the motor and withdraw the motor and rack from the car.
5. Remove the plastic cover and the cover plate from the wiper motor. It should be noted that care must be taken not to introduce dirt into the gearbox assembly.
6. Remove the circlip and washer from the outer end of the drive gearshaft (see Fig. M39). Discard the circlip.
7. Withdraw the gear and parking device assembly from the motor, ensuring that any burrs around the circlip groove of the gearshaft are removed before withdrawal.

Note

One of the following procedures should now be followed dependant upon which part requires renewal.

Replacement of gear and parking device assembly, or renewal of motor

1. Fit the gear and parking device assembly into the motor, locating the drive rack on the peg of the connecting rod and ensuring that the parking switch slide is fitted to the drive rack and is facing the correct way as shown in Figure M39.

Important

Note the position of the anti-streak mechanism on the output gear crankpin and ensure that it is refitted in the same position. If the pin is fitted 180° out, the tag will break on first park cycle.

2. Using grease from the motor gearbox, lubricate the gear teeth.
3. Fit the dished washer, plain washer and circlip to the outer end of the gearshaft.
4. Fit the plastic cover and the cover plate to the wiper motor.
5. Fit the motor and rack assembly to the car by reversing the procedure given for removal. Ensure that when the motor securing clip is tightened, the alignment between the motor and the rack tubing is not destroyed.

6. Connect the loom socket to the wiper motor and operate the wiper motor for a few seconds and then switch off. This will ensure that the wiper wheelboxes are in the parked position.
7. Fit the wiper blades to the wheelboxes in the parked position.

Drive-rack renewal
1. Withdraw the rack from the motor.
2. Fit the new rack, and replace the drive gear, fitting the dished washer, plain washer and using the new circlip provided. Ensure that the plastic parking switch operating slide is correctly located by the arm on the rack, and that the slide is fitted the correct way around as shown in Figure M39.

Important
Note the position of anti-streak mechanism and output gear crankpin.

3. Replace the motor covers and fit the motor and drive rack to the car by reversing the procedure given for removal. Ensure that when the motor securing clip is tightened, the alignment between the motor and the rack tubing is not destroyed.
4. Connect the loom socket to the wiper motor and operate the wiper motor for a few seconds and then switch off. This will ensure that the wiper wheelboxes are in the parked position.
5. Fit the wiper blades to the wheelboxes in the parked position.

'Lucas' 16 W wiper motor - To assemble
Reverse the procedure given for dismantling, noting the following points.
1. Lubricate sparingly the final gear and armature bearings with 'Shell Turbo 41'.
2. Grease liberally the cross-head guide channel, connecting rod assembly, cable rack and gearbox with 'Rocol' MT 265.
3. Ensure that the output gear crankpin is in the correct position.

Brushes - To renew - 'Lucas' 16 W wiper motor
Remove and dismantle the motor as described in 'Lucas' 16 W wiper motor - To dismantle. The original specified length of the brushes is sufficient to last the life of the motor. If it becomes necessary to renew the brushes the complete brushgear assembly must be fitted. The brushgear assembly must be renewed if the main (diametrically opposed) brushes are worn to or near 4,80 mm. (3/16 in.) or if the narrow section of the third brush is worn to the full width of the brush.

Ensure that the brushes move freely in their brush box.

Brush springs - To check - 'Lucas' 16 W wiper motor
1. Using a push-type spring gauge, press on the end face of the brush until the bottom of the brush is level with the bottom of the slot in the brush box.
2. The spring pressure should read 140 g. to 200 g. (5 oz. to 7 oz.), if the pressure reads below these figures the springs should be renewed.

Armature insulation - To test (see Fig. M40)
1. Subject the armature to an insulation test.
2. Check the armature windings for short and open circuits.
3. If the commutator is worn, it can be lightly skimmed in a lathe using a diamond-tipped tool.
4. After skimming, undercut the armature slots and remove all burrs by lightly polishing with fine emery.

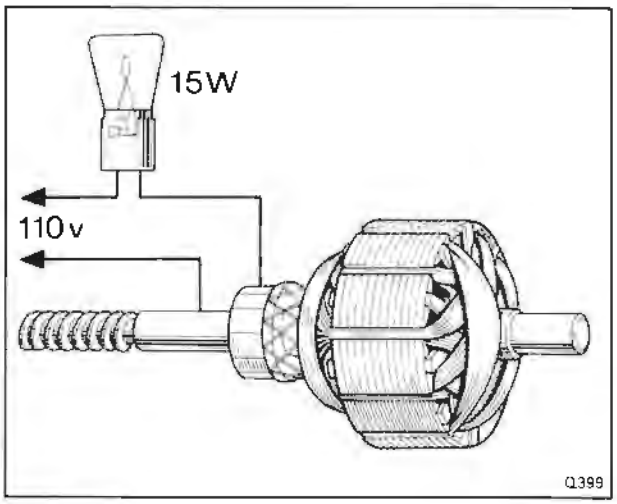

Fig. M40 Armature insulation test

Cable rack and tubing - To examine
1. Badly kinked or flattened tubing must be renewed. Any bends of a radius less than nine inches must be reformed. Access to the cable rack tubing is gained by the removal of the top roll as described in Chapter S - Body, and by the removal of the refrigeration system evaporator box as described in Chapter C - Air Conditioning System.
2. Insert the hook of a spring balance into the hole in the cross-head and withdraw the rack with the balance. The maximum permissible force required should not exceed 2,72 kg. (6 lb.).

Cable rack drive - To renew
1. Remove the wiper blades and arms.
2. Disconnect the rack from the wiper motor as described in Wiper motor - To remove.
3. Remove the rack from the tubing by carefully pulling from the motor end to release the rack from the wiper arm wheelboxes.
4. Lubricate the new rack with 'Rocol' MT 265 grease, then fit into the tubing. It may be necessary to rotate the wheelbox spindles slightly in order to engage the gears with the rack. Fit the rack to the motor.
5. Fit the wiper arms and blades, then check the setting of the parking switch as described in Parking Switch - To adjust.

Printed in England
© Rolls-Royce Motors Limited 1977

Wheelboxes
The wheelboxes are lubricated on initial assembly and do not require any maintenance. They are secured in position on the scuttle by a chromium plated nut fitted to the outside of the car.

Loose wheelboxes are a contributory factor to both noisy and faulty wiper operation, therefore ensure that they are secure at all times.

In the unlikely event of a failure of one of the wheelboxes, it must be renewed.

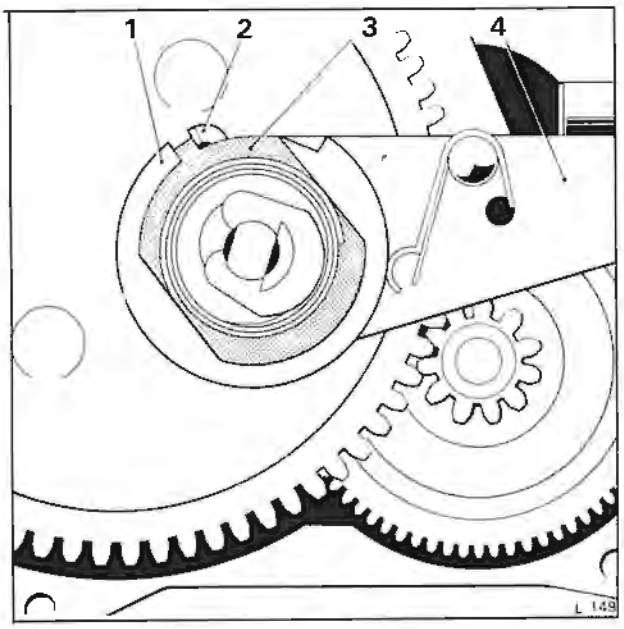

Fig. M41 Anti-streak settings
1 Wave washer recess
2 Drive plate tag
3 Tag an eccentric
4 Crankpin with eccentric in the extended (Park) position

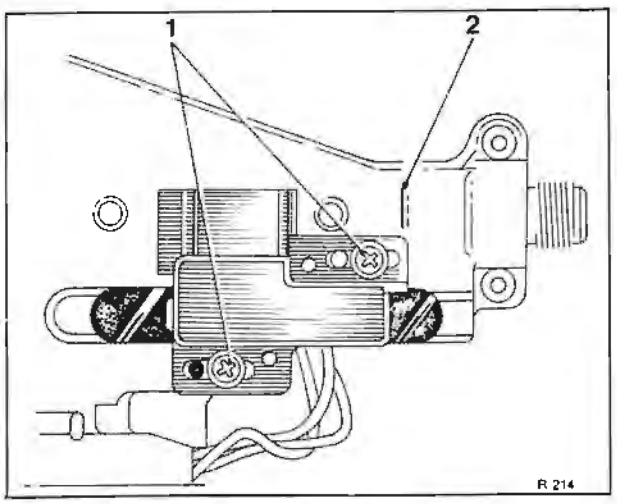

Fig. M42 Parking switch adjustment
1 Parking switch securing screws
2 Point at which motor operates

Wheelbox - To renew
1. Remove the top roll and instrument panel as described in Chapter S - Body.
2. Remove the air conditioning equipment located behind the facia, for full details refer to Chapter C - Automatic Air Conditioning System.
3. Remove the wiper blade and arm.
4. Remove the flexible drive.
5. Unscrew and remove the chrome nut and withdraw the wheelbox.

Anti-streak mechanism
The anti-streak mechanism fitted to the 'Lucas' 16 W wiper motor enables the wiper arms and blades to make a complete wiping cycle before coming to rest in the parked position, thus ensuring there are no streaks on the screen.

It is imperative, when the mechanism has been dismantled, that it is correctly assembled (see Fig. M41).
1. The tag on the driving plate and the recess in the wave washer, face towards the outside of the gearwheel.
2. Rotate the eccentric so that the plastic slide is depressing the park switch, fit the wave washer with marks uppermost and just behind tag. Fit the driving plate bush and driving plate with the latch just behind the tag.
3. It is possible to assemble these components 180° from the position previously described. This must be avoided as the mechanism will lock and the driving plate will fracture before the motor is parked.

Wiper motor - Parking switch adjustment
The parking switch of this motor is provided with an adjustment to allow for different angles of park. When replacing a drive gear assembly it may be necessary to re-adjust the parking switch to suit the new assembly. Failure to do this may result in one of the following faults:
1. With the wiper switch in the intermittent position and the blades parked on the screen, moving the switch to the off position does not cause the blades to move to the off screen position.
2. When moving the wiper switch from off to intermittent, there is a 7 to 8 second delay before the wiper motor operates.

If a new gear assembly has been fitted and the wiper motor exhibits one of the above faults the relevant following procedure should be adopted.

Note
Always ensure that the top plate is in position and the parking switch securing screws are tight before operating the motor.

Procedure for Fault 1
1. Loosen the rack tube nut and release the clamp from the wiper motor. Care must be taken to ensure that the tube is not completely disconnected otherwise the drive rack may become bent.

2. Rotate the motor until the parking switch is accessible (see Fig. M42). Tighten the rack tube nut. This will allow the motor to be operated and also permit adjustment of the switch.
3. Switch on the ignition and slacken the parking switch securing screws and move the parking switch fully inwards towards the gearwheel. Select intermittent wipe, and once the blades have moved, select off. The motor will not reverse and park.
4. Carefully move the limit switch outwards to a position where the motor will reverse and move the blades to the correct parking position. Scribe a line on the motor casing at this point as shown in Figure M42.
5. Move the limit switch 0,51 mm. (0.2 in.) further outwards from the scribe line (dimension A) and tighten the switch securing screws.
6. Switch off the ignition and re-fit the wiper motor to the mounting bracket.
7. Check all of the wiper functions for correct operations.

Procedure for Fault 2
To adjust the parking switch, proceed as follows:
1. Unscrew the rack nut and release the clamp from the wiper motor.
2. Rotate the motor until the parking switch is accessible. Tighten the rack nut. This will allow the motor to be operated and also permit adjustment of the switch.
3. Switch on the ignition and slacken the parking switch securing screws and move the switch fully inwards towards the gearwheel. Select intermittent wipe, and once the blades have moved, select off. The motor will not reverse and park.
4. Carefully move the limit switch outwards to a position where the motor will reverse and move the blades to the correct parking position. Scribe a line on the motor casing at this point as shown in Figure M42.
5. Disconnect the socket to the non-adjustable parking switch situated beneath the main gearwheel casing.
6. Move the limit switch fully outwards, select slow wipe and once the blades have moved, select off and allow the motor to reverse and stop.
7. Connect a circuit continuity tester across the non-adjustable switch terminals 3 and 5 (see Fig. M43).
8. If the previous test indicates a circuit, scribe a line on the motor casing at that point.
9. If no circuit exists move the parking switch slightly inwards and select slow followed by off.
10. Repeat this operation until circuit continuity is indicated and scribe a line on the casing.
11. Secure the parking switch at a point midway between the two scribed lines.
12. Switch off the ignition and replace the socket in the parking switch and refit the motor to the securing bracket.
13. Check all wiper functions for correct operation.

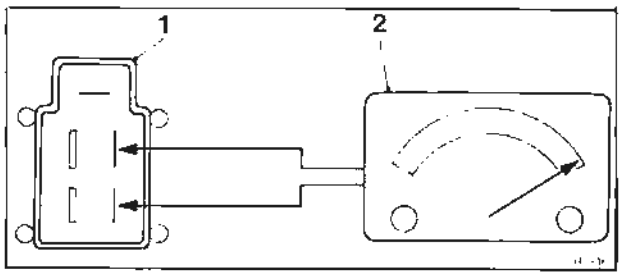

Fig. M43 Continuity testing
1 On-screen parking switch
2 Circuit tester

Wiper motor - To measure light-running current
1. Unscrew and remove the self-tapping screws which secure the gearbox cover, then lift off the cover to expose the connecting rod and gearbox.
2. Remove the circlip securing the eccentric coupling to the final gear crankpin (for further information see Anti-streak mechanism).
3. Remove the connecting rod from the gearbox to release the cross-head and rack.
4. Connect a first grade moving-coil ammeter in series with the wiper motor supply cable and measure the light-running current. The light-running current at normal speed should read between 1 and 2 amps and at high speed between 2 and 3 amps with 12 volt supply measured at the motor.
Should the motor not conform to these figures the motor should be renewed.

Windscreen wiper relays

The relays are Lucas 6 RA type and all can be tested in a similar manner.

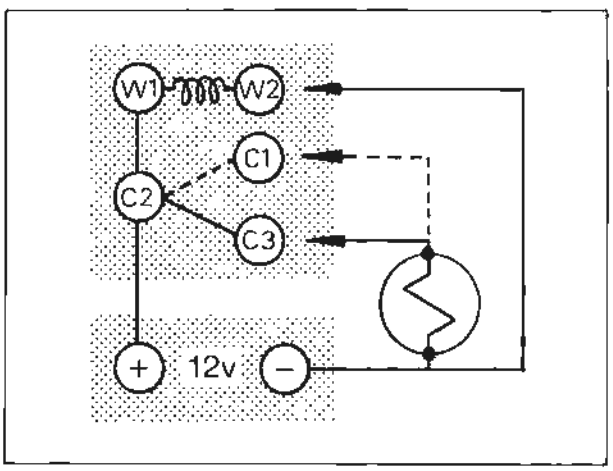

Fig. M44 Wiper relay test circuit

Relays - To test (see Fig. M44)
1. Disconnect the battery.
2. Remove the cables from the relay connections and tape the cables to insulate them.

Printed in England
© Rolls-Royce Motors Limited 1977
April 1977
T.S.D. 4200

3. Connect C2 to the positive side of a 12 volt battery.
4. Connect a 12 volt test lamp between C3 and the negative side of the battery and verify that the lamp is lit.
5. Connect the test lamp between C1 and the negative side of the battery and ensure that the lamp remains extinguished.
6. Connect W1 to C2 and connect W2 to the negative side of the battery. Verify that the lamp illuminates.
7. Remove the test lamp and other connections.
8. Reconnect the cables, ensuring that they are connected correctly.
9. Connect the battery.

Camargue

Windscreen wiper motor

The wiper motor is a Lucas 17 W, the motor gearbox incorporates an automatic limit-switch that switches the motor off and then provides an electrical circuit which causes regenerative braking of the armature to ensure consistent parking of the wiper blades.

Routine maintenance
All bearings are lubricated during manufacture and do not require maintenance.

Oil, tar spots or similar deposits should be removed from the windscreen with methylated spirits. Silicone or car wax polishes must not be used for this purpose. Efficient wiping is dependant upon keeping wiper blades in good condition. Worn or perished blades are readily removed for replacement. Periodically remove the blades and wash with liquid detergent.

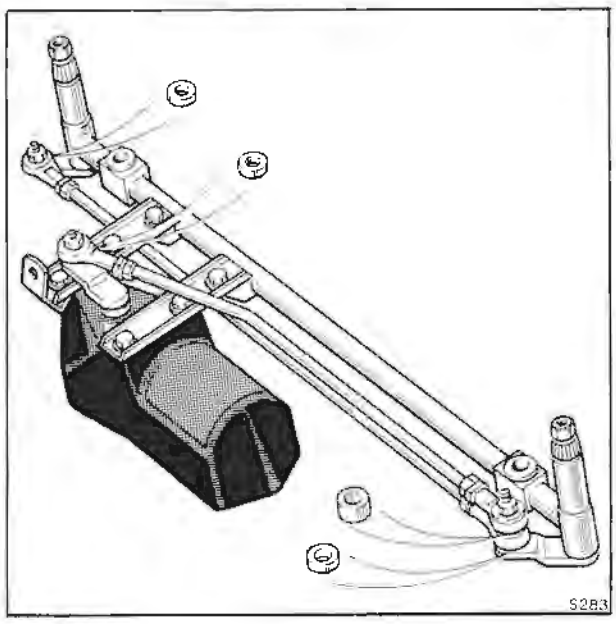

Fig. M45 'Lucas' 17W wiper motor

Windscreen wiping mechanism - To check
Unsatisfactory operation (if the supply voltage is correct) may be caused by a mechanical or electrical fault. The symptoms and remedial procedures associated with the more common causes of wiper failure (or poor performance) are described under the following headings (a) and (b).

(a) Friction
Excessive friction between apparently satisfactory wiper blades and the windscreen may result in a reduction in wiping speed when the blades are wiping on a windscreen that is only partially wet.

A further symptom is that blades become noisy at each end of the wiping arc. When possible the blades should be temporarily replaced with a pair known to be in good condition. If this rectifies the fault, fit new blades.

(b) Low wiping speed or irregular blade movement
To determine whether a low wiping speed is due to excessive mechanical loading or to poor motor performance, disconnect the primary link rod at the wiper motor.

Measuring light running current and speed
Connect a first grade moving coil ammeter in series with the motor supply cable (brown-light green) and measure the current consumption. Check also the operating speed by timing the rotation speed of the rotary link. Compare with table below

Light running current after 60 seconds from cold	LOW SPEED	1.2 amps
	HIGH SPEED	2.3 amps
Light running speed after 60 seconds from cold	LOW SPEED	44 } r.p.m. at 12.5 v
	HIGH SPEED	64 }

If the motor does not run or current consumption and speed are vastly incorrect, an internal fault in the motor is indicated and a replacement motor should be fitted or the motor removed for detailed examination. See Motor - To remove.

If the current consumption and speed are correct check for proper functioning of the transmission linkage and wiper-arm spindles.

Windscreen wiper motor - To remove (see Fig. M45)
Before the motor can be removed, the wiper arms, pantograph, reaction tube and link rods must first be removed. Proceed as follows:
1. Remove the domed retaining nuts.
2. Remove the arms, taking care not to damage the thrust washer and circlip. The arms should be gripped by the main body to avoid bending the arm.
3. Remove the splined tapered driving collars from the wiper arm spindles. (The collars might be lodged in the splined wiper arm dome).
4. Unscrew the Allen screw and remove the dummy tube from the centre wiper spindle.
5. Unscrew the Allen screw on the pantograph clamp and remove the pantograph.

6. Remove the nuts and washers from the three crank pins noting the location of the large washers.
7. Remove the large distance tube from the intermediate link connection on the centre lever crank pin.
8. Remove the straight intermediate link rod from the outboard wiper spindle lever crank pin and the centre lever crank pin.
9. Remove the three small distance pieces from the crank pins.
10. Operate the wiper motor and switch off the ignition when the rotary lever is in the vertical (12° clock) position between the two cantilever brackets. Disconnect the battery.
11. Unscrew the bolts securing the cantilever brackets to the scuttle, remove the bolts, nuts and washers.
12. Unscrew the bolts securing the cantilever brackets to the reaction tube.
13. Slacken the bolts securing the cantilever brackets to the motor body, rotate the bracket on the body to enable the motor to rest on the bottom of the plenum chamber.
14. Rotate the two spindle levers so that they are in line with the reaction tube.
15. Unscrew the two reaction tube bolts and remove with washers. (The nuts are retained in the reaction tube).
16. Push the reaction tube into the duct and rotate the tube so that the wiper arm spindles are facing the front of the car.
17. Slide the reaction tube inboard until the outer end of the tube is free to be lifted out of the duct and slide the tube out of the chamber.
18. Unscrew and remove the cantilever brackets from the motor body.
19. Disconnect the motor fly lead plug.
20. Rotate the motor so that the output lever is facing rearwards and then by twisting and tilting the motor, gently ease it out of the air duct.

Motor and gearbox - Bench inspection
After dismantling, examine individual items.

Brush replacement
The original length of the brushes is sufficient to last the life of the motor. If, due to accidental damage to the brushes or to faulty commutator action it becomes necessary to renew the brushes, the complete brushgear service assembly must be fitted. The brushgear assembly will require renewing if the brushes are worn to 4,8 mm. (3/16 in.). Verify that the brushes move freely in the boxes.

Checking brush springs
The design of the brushgear does not allow for easy removal of the brush springs. Similar to the brushes, the springs are expected to last the life of the motor and should not normally require renewing. In the unlikely event of the spring pressure failing to meet the specified requirements, the complete brushgear assembly must be replaced in a similar manner to that detailed for brush replacement.

To check the spring pressure, press on the end face of the brush with a push type spring gauge until the bottom of the brush is level with the bottom of the slot in the brush box, the spring pressure reading should be 140-200 g. (5-7 oz.).

Note
In the event of the brushgear being renewed, it is important to reconnect the cables correctly.

Testing and servicing the armature
Use armature testing equipment to check the armature windings for open and short circuits.

Test the soundness of the armature insulation by using a mains test lamp. If the lamp illuminates, faulty insulation is indicated.

If the commutator is worn, it can be lightly skimmed with the armature mounted in a lathe. Afterwards, clear the inter-segment spaces of copper swarf.

Inspection of moulded gearwheels
Examine each gearwheel for signs of damage, particularly in regard to the teeth and the slip ring on the final gearwheel.

Limit switch
Inspect the inside of the switch cover and ensure that the cable connections are intact and that the contact arms exert the correct pressure upon the slip ring, the measurement between the contact arm contact-faces and the base upon which they are riveted should be approximately 7,1 mm. (9/32 in.).

Yoke inspection
Check that the permanent magnet retaining clips secure the magnets firmly to the inside face of the yoke.

Motor and gearbox - To assemble
During assembly, special attention should be given to the following points:

Lubrication
Apply Ragosine Listate grease to the teeth of the gearwheels, the worn gear on the armature shaft and the slip ring on top of the final gearwheel.

Apply Shell Turbo 41 oil to the final-gearwheel shaft, the bearing bushes and sparingly to the armature shaft bearing surfaces.

Apply molybdenum di-sulphide oil to the intermediate gearwheel pivot pin.

General
When fitting the final gearwheel, ensure that the slip ring outer-facing segment is pointing in the same direction as the rotary link.

The final gearwheel fixing nut should be torque tightened to 0,23 kgf.m. (20 lbf.in.). (See note

Printed in England
© Rolls-Royce Motors Limited 1977
April 1977
T.S.D. 4200

regarding rotary link in Motor and gearbox - To dismantle).

Before fitting the brushgear assembly, check the gearbox spacing-ring fixing screws for tightness. If necessary, torque tighten them to 0,23 kgf.m. (20 lbf.in.).

Before fitting a service replacement armature, first slacken the thrust screw in the gearbox to ensure proper fitting of the yoke. **The marking on the yoke must be adjacent to the arrow-head marking on the gearbox rim.** Torque tighten the fixing bolts to 0,138 - 0,184 kgf.m. (12 - 16 lbf.in.).

The armature end-float should be between 0,05 - 0,2 mm. (0.002 - 0.008 in.) measured with the final gearwheel removed from the gearbox. To obtain satisfactory end-float adjustment with the motor and gearbox assembled, position the unit so that the adjuster screw is uppermost, tighten the adjuster screw until abutment takes place and then slacken it off one quarter turn, secure it in this position by tightening the locknut.

If the motor is noisy after assembly it may be due to slight misalignment of the yoke bearing which may be rectified by giving the rim of the gearbox a series of light taps with a plastic or wooden mallet. Take care not to strike the yoke with the mallet as this may damage the yoke or permanent magnets.

Windscreen wiper motor - To fit

Run the motor to rotate the rotary lever to a position parallel with the two motor mounting brackets (12 o'clock).

Ensure that the air intake duct and drain tube are free from foreign matter.

1. With the motor parallel to the screen and the nose of the motor facing outboard, position the inner end of the rotary lever under the body skin at the lower edge of the screen, ease the motor towards the front of the car and at the same time twist and tilt the nose of the motor into the plenum chamber. Lower the motor, motor plug and flylead into the bottom of the chamber.

2. Rotate the motor so that the rotary lever is facing upwards. Fit the flylead plug to the supply socket. Verify that the three spigot washers are intact in the motor cover, if any have become detached, affix with Bostick type adhesive.

3. Fix the two cantilever brackets to the motor gearbox cover, but do not fully tighten the brackets.

4. With the spindle levers parallel with the reaction tube, insert the tube through the plenum chamber aperture and feed it along the duct towards the centre of the car until the tube can be completely lowered into the duct. Push the tube rearwards and upwards under the body skin at the lower edge of the screen and slide the tube outboard until the centre spindle is adjacent to the cut-out in the top panel. Rotate the tube to enable the centre spindle to be brought through the cut-out and align the tube to the body mounting holes and fix to the body; a ⅜"A/F spanner should be used to prevent the hexagon headed inserts turning in the rubber mount. Do not fully tighten the fixing bolts.

5. Rotate the cantilever outboard bracket to allow sufficient clearance with the reaction tube and position both brackets on the top face of the reaction tube bracket. Fix in position with the distance tube used for auxiliary bracket to scuttle fixing quarter inch bolts and large flat washers. Fully tighten all fixing bolts.

6. Fit the small distance pieces to both spindle crankpins and the motor rotary lever crankpin. Insert the straight intermediate link rod into the intake duct and locate it on the outboard wiper spindle lever crankpin and centre lever crankpin.

7. Fit the large distance tube over the intermediate link on the centre lever crankpin. Fit the cranked primary link to the motor rotary lever and centre lever crankpin; the cranked section of the link adjacent to the motor and pointing towards the windscreen. Place the large diameter washer over the primary link on the centre lever crankpin and a quarter inch flat washer on the two remaining crankpins. Fit the nuts on the crankpins and fully tighten.

8. Verify that no tools have been left in the air duct. Connect the battery and switch the windscreen wiper switch to the 'off' position. Switch on the ignition switch to enable the wiper mechanism to run to the preset parked position.

9. Fit the pantograph clamp to the driver's wiper spindle with the pin anchorage facing away from the windscreen. Fit the Allen screw in the clamp but do not tighten. Fit the dummy tube onto the centre wiper spindle with the Allen screw facing downwards. Fit the splined tapered driving collars onto both wiper arm spindles.

10. Run the motor rotary lever through 180° from its parked position, fit a box spanner on the rotary lever crankpin nut and set the rotary lever in line with the primary link. Fit the wiper arm articulating link to the pantograph pin anchorage.

Rotate the pantograph clamp to enable the wiper arm to be lightly placed on the wiper spindle driving collar.

11. Using a jig (i.e. block of wood 6 in. x 1.25 in. x 0.5 in.), set the wiper blade parallel to and 1.25 in. away from the 'A' post screen finisher. Lightly hold the blade and arm in position while pressing the arm onto the driving collar.

12. Fit and tighten the arm retaining nut. Tighten the Allen screw in the pantograph clamp.

Note

When fitting the wiper arm onto the splined driving collar, pressure must be applied only to the knuckle part of the arm, not to the arm itself, as this will bend the arm and upset the angular movement of the blade.

13. If difficulty is experienced in maintaining the preset arm position when tightening the retaining nut, remove the arm and turn the splined collar through 180°

14. Run the motor to the 'Park' position and set the passenger's side arm and blade 1.25 in. above the bottom screen finisher, measured between the finisher and the blade pivot pin protrusion at the end of the wiper arm. The jig can be used to achieve this.
15. With a wet screen and the wiper switched to fast speed, note the angle of the pantograph blade on overwipe and trim the pantograph clamp to suit.

Windscreen and headlamp washer (all cars)

The washer unit does not require any maintenance other than to ensure that the electrical connections are secure and that the container is kept clean.

If a motor unit fails it should be replaced by a new unit.

Should a screen jet become blocked, remove the jet and blow out the obstruction. Adjust the screen jet so that the washing liquid impinges on the windscreen at the top of the arc traversed by the blade.

Windscreen wiper blades (all cars)

Excessive friction between apparently satisfactory wiper blades and the windscreen may result in a marked reduction in wiping speed when the blades are wiping a windscreen that is only partially wet. A further symptom is that the blades become noisy during and at each end of the wiping arc.

If the blades are suspect, they should be changed for a pair known to be in good condition; if this rectifies the fault, new blades should be fitted. Ensure that the screen is free from traffic film, silicones, etc. Clean with a french chalk/water solution.

Printed in England
© Rolls-Royce Motors Limited 1977

Section M6

Windscreen wipers and washers

Simplified fault diagnosis
Silver Shadow II, Bentley T2,
Silver Wraith II, Corniche
Fig. M46

Printed in England
© Rolls-Royce Motors Limited 1977

April 1977
T.S.D. 4200

Function faulty?

Fast wipe	Normal wipe	Inter-mittent	Wipe during wash	Park off screen	Wash cycle	**Possible cause**
●	●	●	●	●	●	Fuse blown or no live feed to fuse
●	●	●	○	●	○	Wiper switch
○	○	●	●	○	○	Control box
●	○	○	○	○	○	Wiper motor fast brush Relay 122
○	●	●	●	●	○	Relay 122
○	○	○	○	●	○	Wiper motor park off screen switch Relay 130 Relay 131
●	●	●	●	○	○	Wiper motor common brush Relay 130 Relay 131
○	●	●	●	○	○	Wiper motor normal brush Relay 122
○	○	●	○	○	○	Wiper motor park on screen switch
○	○	○	●	●	●	Washer switch
○	○	○	○	○	●	Washer motor

Key

○ ○ ○	Functions satisfactory
● ● ●	Function faulty
● ● ●	All functions faulty

Section M6

Windscreen wipers and washers
Fault diagnosis

Silver Shadow II, Bentley T2, Silver Wraith II, Corniche

Malfunction	Possible cause	Action
Complete system failure (i.e. wiper motors and washer motors)	Fuse 21 blown (if seat mechanism also affected)	Disconnect seat loom plug to isolate seat mechanism. Disconnect left-hand toeboard socket J to isolate screen washer motor headlamp wiper and washer. On right-hand drive cars disconnect left-hand toeboard K and on left-hand drive cars disconnect right-hand toeboard C to isolate screen wiper motor and relays. Replace fuse. If fuse blows again check for short circuit on light green cable at wiper switch, control unit, headlamp wash relay and fuseboard. If fuse was satisfactory, replace toeboard socket J, K (or C) and seat loom plug, check the fuse each time to determine area of fault. (Refer to wiring diagram).
	No supply voltage	Test for live feed on light green cable at fuseboard 'B' and on brown/light green cable at fuseboard 'B' and switchbox.
Screen wiper motor inoperative. Washer motor satisfactory	Wiper motor faulty	At wiper motor, without disconnecting the plug and socket, connect the white/light green cable at terminal 1 to earth. With NORMAL speed selected, check for live feed at red/light green cable at motor, if live feed is present the motor should be removed for further checking.
	Poor connection	Check for live feed on light green cable at switch, at C1 and W1 of relay 131 and C2 of relay 122.
	Poor earth connection	At wiper motor, connect terminal 1 to a good earth. If motor operates, check white/light green cable at motor socket and relay 130. Check valance earth for soundness and black cable on relay 130. If necessary test relay 130. Check black cable on relay 131.
Screen wiper motor inoperative on NORMAL and FAST.	Wiper switch faulty	Test for live feed on light green/white cable at wiper switch or relay 131 with NORMAL or FAST selected.
Screen wiper motor inoperative on NORMAL speed (FAST satisfactory)	Wiper relay 122 or wiper motor faulty	With NORMAL selected, test for live feed on red/light green cable at wiper motor. If live feed is available, the motor is faulty, if live feed is absent, the wiper relay is faulty.
Screen wiper motor inoperative on FAST speed (NORMAL satisfactory)	Wiper switch faulty	Test for live feed at terminal W1 of wiper relay 122.
	Wiper relay 122 faulty	Verify that there is a live feed on terminal C2 (brown/light green cable) then test for live feed on yellow/light green cable at C1 with FAST speed selected.

Printed in England
© Rolls-Royce Motors Limited 1977
April 1977
T.S.D. 4200

Malfunction	Possible cause	Action
Screen wiper motor inoperative on FAST speed (NORMAL satisfactory) (continued)	Wiper motor faulty	Test for live feed on yellow/light green cable at motor socket.
Screen wiper motor inoperative on INTERMITTENT or Wash/Wipe	Control unit faulty	Replace control box.
	Light green cable from fuseboard to control box open circuit	Test for 12 volts on light green cable at control box
Screen wiper motor inoperative on INTERMITTENT (Wash/Wipe satisfactory)	Poor connection	With INTERMITTENT selected test for live feed on blue/light green cable at toeboard socket K (socket C on left-hand drive cars) and wiper motor, yellow/blue cable at wiper motor (this checks Park-on-screen switch), left-hand toeboard K (right-hand C on left-hand drive cars) and 'flying lead' at control box.
	Control box faulty	Replace control box.
Wipers will not switch off	Control box	Replace box.
Wash/Wipe inoperative (screen wiper and washer pump)	Washer switch faulty	Test for live feed on light green/black cable of washer switch.
	Poor earth connection	Check earth cable from washer switch to left-hand 'A' post.
Screen wiper inoperative during Wash/Wipe (INTERMITTENT and washer pump satisfactory)	Poor connection	Check 'flying lead' connector (light green/blue) at control box.
	Control box faulty	Replace control box.
Washer pump inoperative (Wipe cycle satisfactory)	Faulty pump motor	At washer motor, connect 12 volt positive to light green cable and 12 volt negative to light green/black cable.
	Poor connection	Test for live feed on light green cable at pump and toeboard socket J. Check also light green/black cable at toeboard socket J.

Camargue

Windscreen wipers fail to operate on NORMAL and FAST speed	No supply voltage	Check supply from fuse 21 to wiper switch terminal 7 (9LG cable). Check supply to Wash/Wipe control unit terminal 3 (9LG cable).
	Wash/Wipe control unit faulty	Switch to INTERMITTENT wipe cycle. If wipers operate, the wiper motor is satisfactory. Operate the Wash/Wipe cycle. If this is inoperative check the 14B cable on terminal 2 of the Wash/Wipe unit. If the earth connections are satisfactory a faulty control unit is indicated.
	Wiper motor faulty	If the motor will not function on any of the three circuits, check the motor by disconnecting the motor socket and applying 12 volts across the 9NLG cable and 14B cable.

Malfunction	Possible cause	Action
FAST SPEED wipers inoperative. NORMAL wipe, wash/wipe cycle and intermittent cycle satisfactory	Wiper switch faulty	Check continuity of wiper switch terminals 1 and 3.
	Motor plug and socket faulty	Check continuity of motor plug and socket at 9YLG cable and 14B cable.
Wiper motor will not operate	Supply faulty	Operate wash/wipe switch, if washer fails to operate, check supply at wash/wipe unit and fuse 21.
	Wiper motor faulty	With known supply connect a voltmeter to earth and test for voltage at terminal 7 (9LG) on the wiper switch, terminals 1 and 3 (9LG and 9LGP) on the intermittent wipe unit, terminal 3 (9LG) on wash/wipe unit and 9LG cable in motor plug. Switch to all circuits during voltage testing.
Wipers will not switch off	Control box	Replace control box.
Wash cycle satisfactory but wipe cycle inoperative. Normal or Fast speed wipers inoperative	Wash/Wipe control box	Check 14B cable at wash/wipe unit and instrument board earth. Switch to intermittent wipe cycle, if the intermittent wipe operates, the wash/wipe unit is faulty.
Wash cycle inoperative, wipe cycle satisfactory. Normal or Fast speed wipers satisfactory	Washer motor faulty	Check for supply at washer motor terminals and also for correct polarity. Check the fluid level in the container and examine the jets and tubing for leaks and blockage.
Wash/Wipe inoperative. Normal and intermittent wipers satisfactory	Faulty supply	Check supply at washer motor
	Wash/Wipe switch faulty	Connect the 14LGB connection at washer motor to earth with 9LG connection live, washer should operate indicating a faulty wash/wipe switch
Time delay when switching to intermittent wipe cycle	Intermittent wipe unit	Faulty 14B cable at intermittent wipe unit.
Intermittent wipe cycle inoperative. Normal wipe and Wash/Wipe satisfactory	Intermittent wipe unit faulty	Check for continuity between terminals 1 and 3 on the intermittent wipe unit (9LG and 9LGP cables).
	Faulty wiper switch	Check for continuity between connections 2 and 5 at the wiper switch
Intermittent wipe cycle runs continuously. Normal wipe and Wash/Wipe satisfactory	Intermittent wipe unit faulty	Check connections at terminal 2 on the intermittent wipe unit.
	Wash/Wipe unit faulty	Check continuity of 9RLG and 9PLG cable, connections at Wash/Wipe unit.
Intermittent wipe cycle operates one cycle only	Intermittent wipe unit faulty	Relay contacts possibly dirty at intermittent wipe unit.

Printed in England
© Rolls-Royce Motors Limited 1977

Windscreen wipers and washers

Simplified wiring diagram and circuit description

OFF mode

Silver Shadow II, Bentley T2, Silver Wraith II, Corniche
Fig. M47

S 127
Printed in England
© Rolls-Royce Motors Limited 1977
T.S.D. 4200 April 1977

S 127

Printed in England

© Rolls-Royce Motors Limited 1977

T.S.D. 4200 April 1977

Off

Wiper switch set to 'OFF'. Contacts 1-2 and 5-6 are 'made'.

1. Initially the wiper motor continues to operate until the wiper motor sets the 'Park on screen' switch to 'Park'. This de-energises the coil of relay 122 thereby removing the 12v + supply from the 'Normal' brush of the motor.

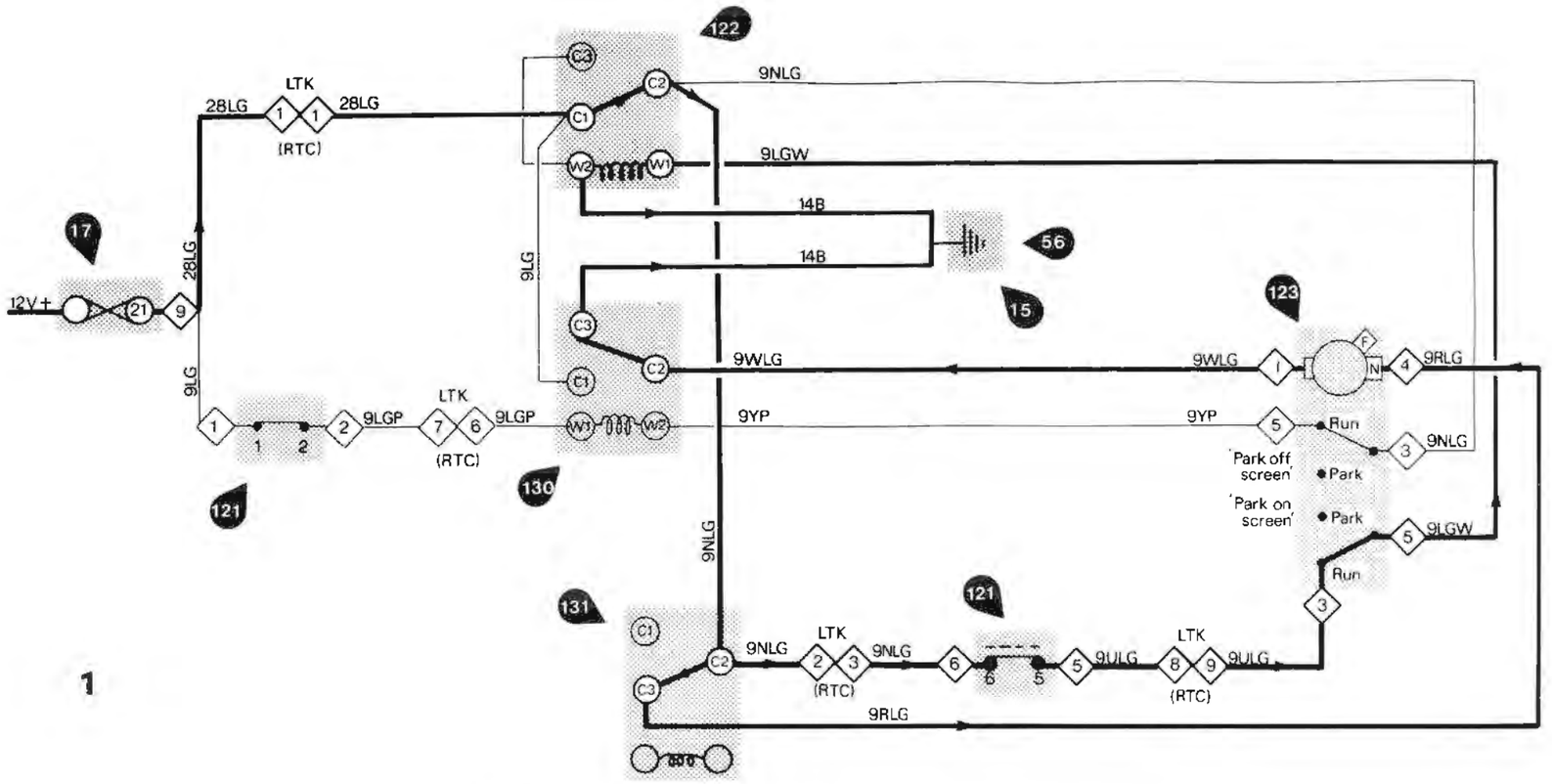

2. With the coil of relay 122 de-energised, relay contacts C2 and C3 are made which provides an earth path for the coil of relay 130 via the 'Park off screen' switch. Contacts C1 and C2 of relay 130 are 'made' which connects 12v – to the 'Normal' brush of the wiper motor causing it to rotate in the reverse direction. This extends the parking rod on the wiper motor which sets the 'Park off screen' switch to the 'Park' position, disconnecting the 12v – supply. The motor stops with the wiper blades in the parked position.

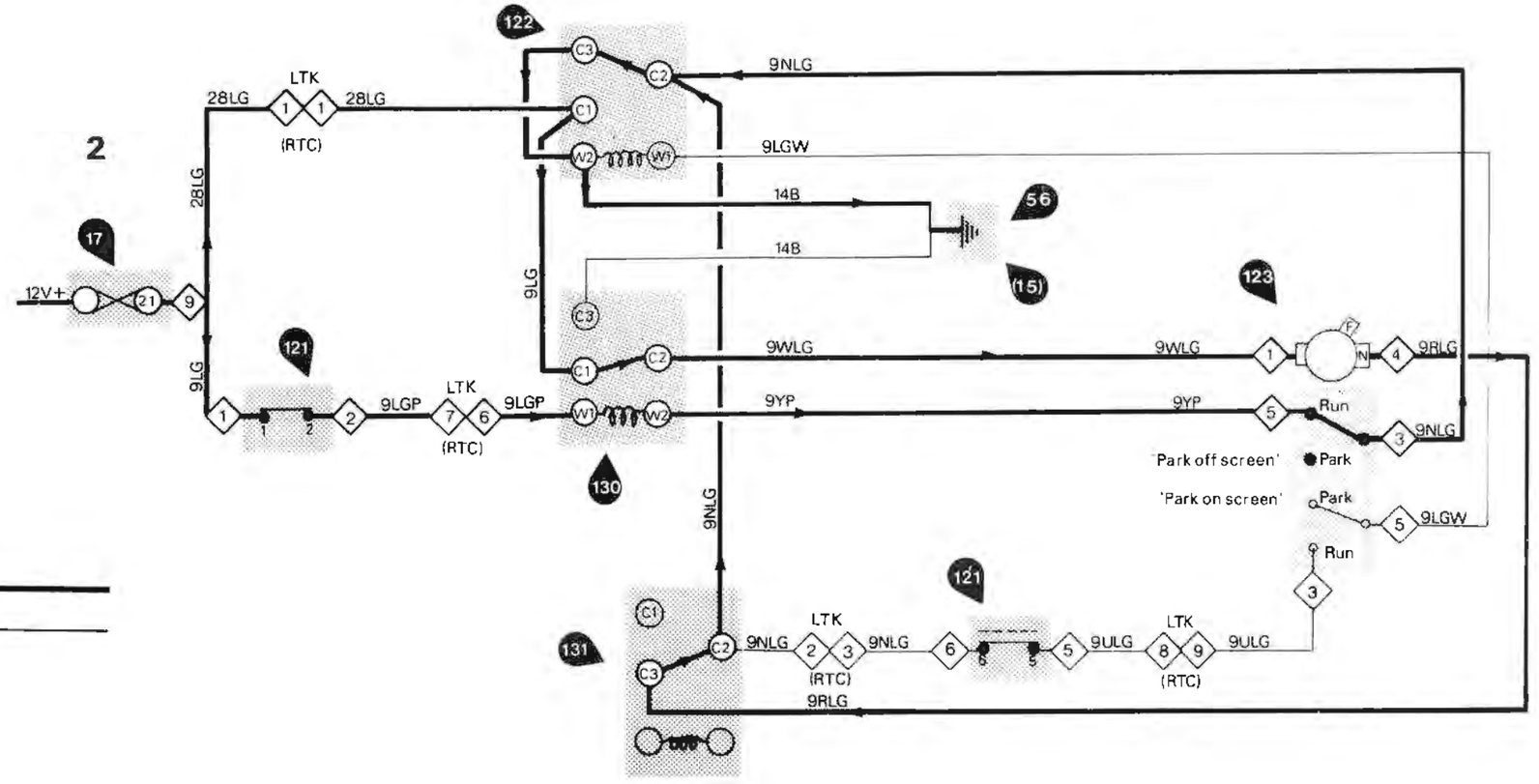

Components

15	Right-hand valance earth
17	Fuse number 21
56	Left-hand valance earth
121	Wiper switch
122	Wiper relay
123	Wiper motor
130	Wiper relay
131	Wiper relay

Active circuit ——————

Inactive circuit ——————

Windscreen wipers and washers

Simplified wiring diagram and circuit description

NORMAL and INTERMITTENT modes

Silver Shadow II, Bentley T2,
Silver Wraith II, Corniche
Fig. M48

S 124
Printed in England
© Rolls-Royce Motors Limited 1979
T.S.D. 4200 July 1979

Normal

Wiper switch set to 'Normal' wipe, contacts 1 and 3 made.

With switch contacts 1 and 3 'made', the coil of relay 131 becomes energised which closes contacts C1 to C2. This completes the circuit connecting the 'Normal' brush of the wiper motor to fuse 21.

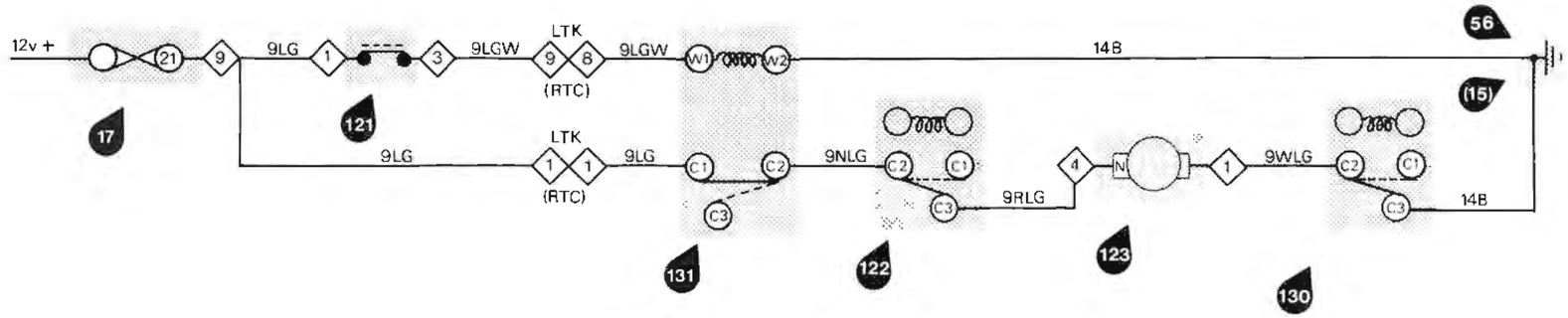

Components

17	Fuse number 21
56	Valance earth
121	Wiper switch
122	Wiper relay
123	Wiper motor
124	Control unit
130	Wiper relay
131	Wiper relay

Intermittent

Contacts 1 - 5 and 7 - 8 made.

1. When wiper switch contacts **7** - 8 are made, the electronics in the control unit sets 12v+at terminal 2 of the control unit. This energises the coil of relay 131 which closes contact C2 to C1 thereby connecting the 'normal' brush of the wiper motor to fuse 21, causing the motor to rotate.

2. Immediately the motor rotates, a cam on the motor sets the 'Park on screen' switch to RUN which maintains the 12v+at the coil of relay 131.

3. After one wipe cycle, the cam on the wiper motor sets the 'Park on screen' switch to PARK which disconnects the 12v+from the coil of relay 131 thereby disconnecting the motor supply. The motor stops with the wiper blades in the 'Park on screen' position.

4. After a delay of 6 seconds, the electronics in the control unit resets 12v+at terminal 2 causing the motor to rotate again.

5. Paragraphs 3 and 4 are repeated until the wiper switch is set to OFF.

Note

The wiper control unit shown is a simplified diagram only.

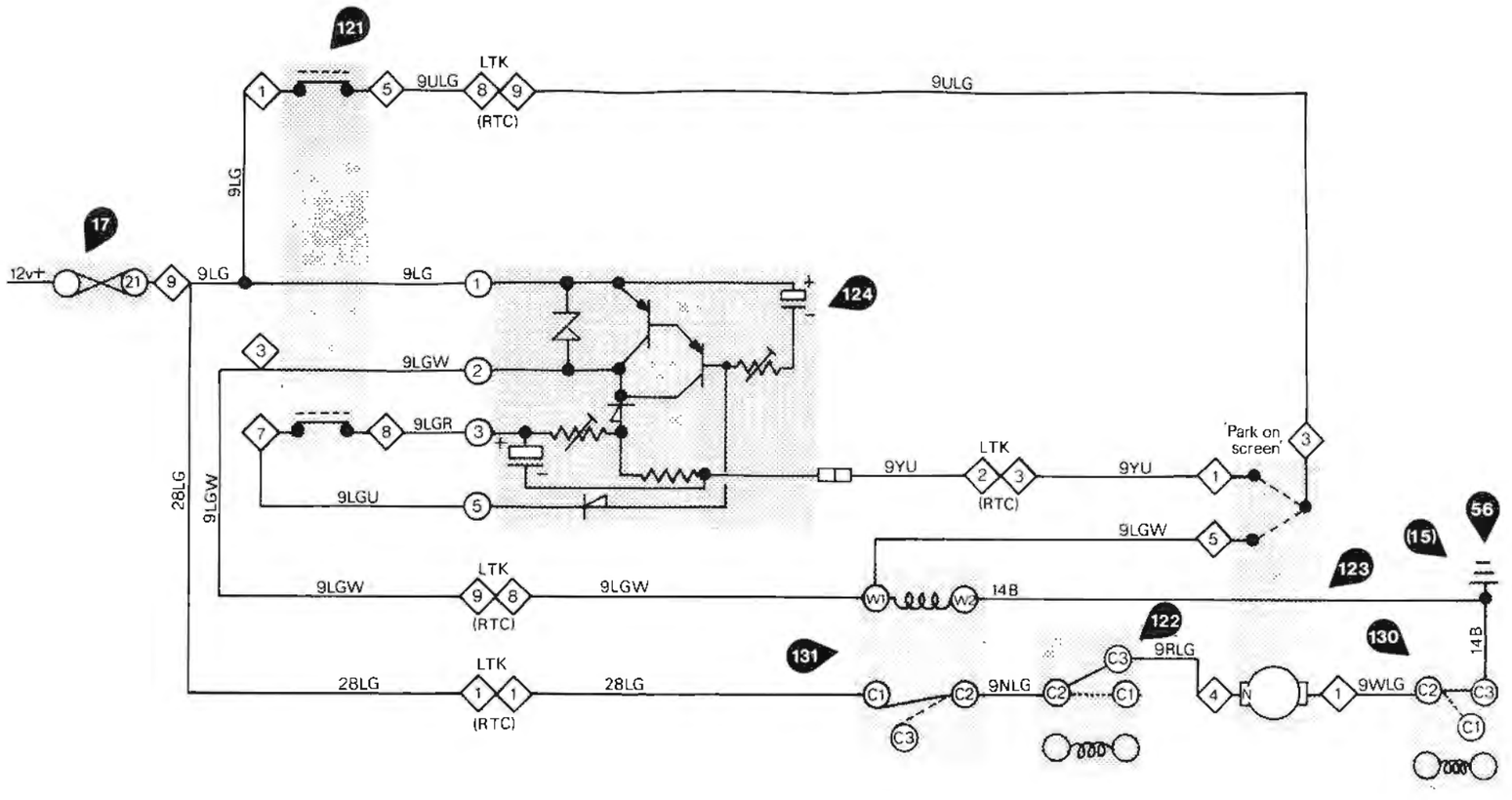

© Rolls-Royce Motors Limited 1979

T.S.D. 4200 July 1979

Printed in England

Windscreen wipers and washers

Simplified wiring diagram and circuit description

FAST and WASH/WIPE modes

Silver Shadow II, Bentley T2, Silver Wraith II, Corniche
Fig. M49

Printed in England
© Rolls-Royce Motors Limited 1977

T.S.D. 4200 April 1977

S 123

Printed in England

Fast

Wiper switch set to 'Fast' wipe, contacts 1-3-4 made.

With switch contacts 1 and 3 made, the coil of relay 131 becomes energised which closes contacts C1 to C2.

Simultaneously, switch contacts 1 and 4 are 'made', the coil of relay 122 becomes energised which closes contacts C1 to C2. This completes the circuit connecting the 'Fast' brush of the wiper motor to fuse 21.

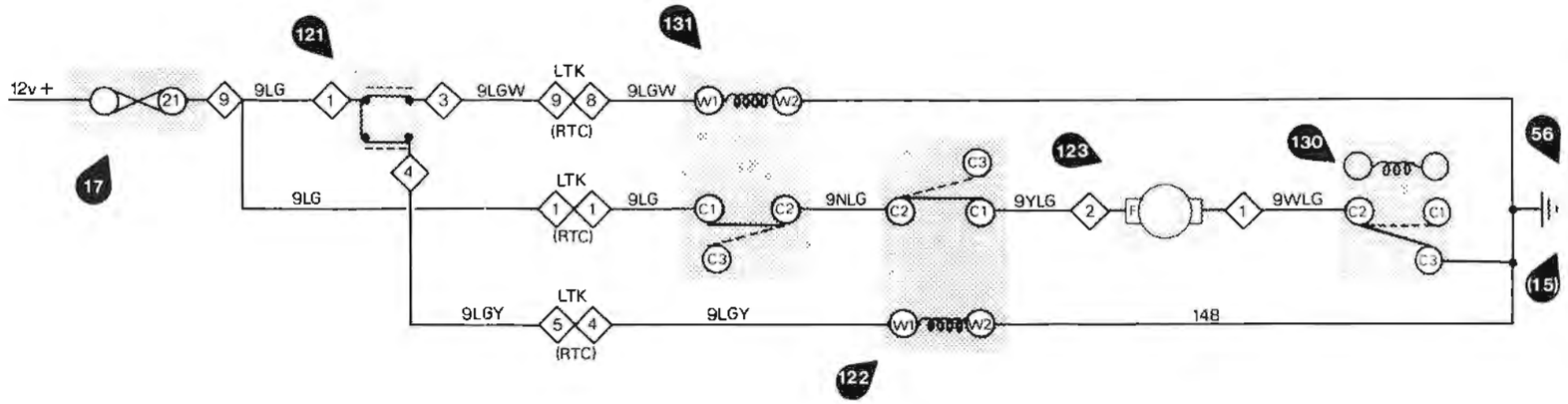

Components

15	Right-hand valance earth
17	Fuse number 21
55	Left-hand 'A' post earth
56	Left-hand valance earth
121	Wiper switch
122	Wiper relay
123	Wiper motor
124	Control unit
125	Washer switch
126	Washer motor
130	Wiper relay
131	Wiper relay

© Rolls-Royce Motors Limited 1977

T.S.D. 4200 April 1977

Wash/wipe

When the washer switch is depressed, an earth path is completed for the washer pump which operates.

The switch also provides an earth path for 'flying lead' 14 LGB of the wiper control unit which sets 12v+ output at terminal 2 of the unit. This energises the coil of relay 131 which closes relay contacts C1 and C2, thereby connecting fuse 21 to the 'Normal' brush of the wiper motor causing it to operate.

When the washer switch is released, the washer pump motor will stop immediately but the electronics in the control unit will maintain the 12v+ supply at the wiper motor for a further 5 seconds. The wipe cycle is completed with the wiper blades in the 'Park' position. Details of this operation are given in the diagrams showing the 'OFF' sequence.

Note

The wiper control unit shown is a simplified diagram only.

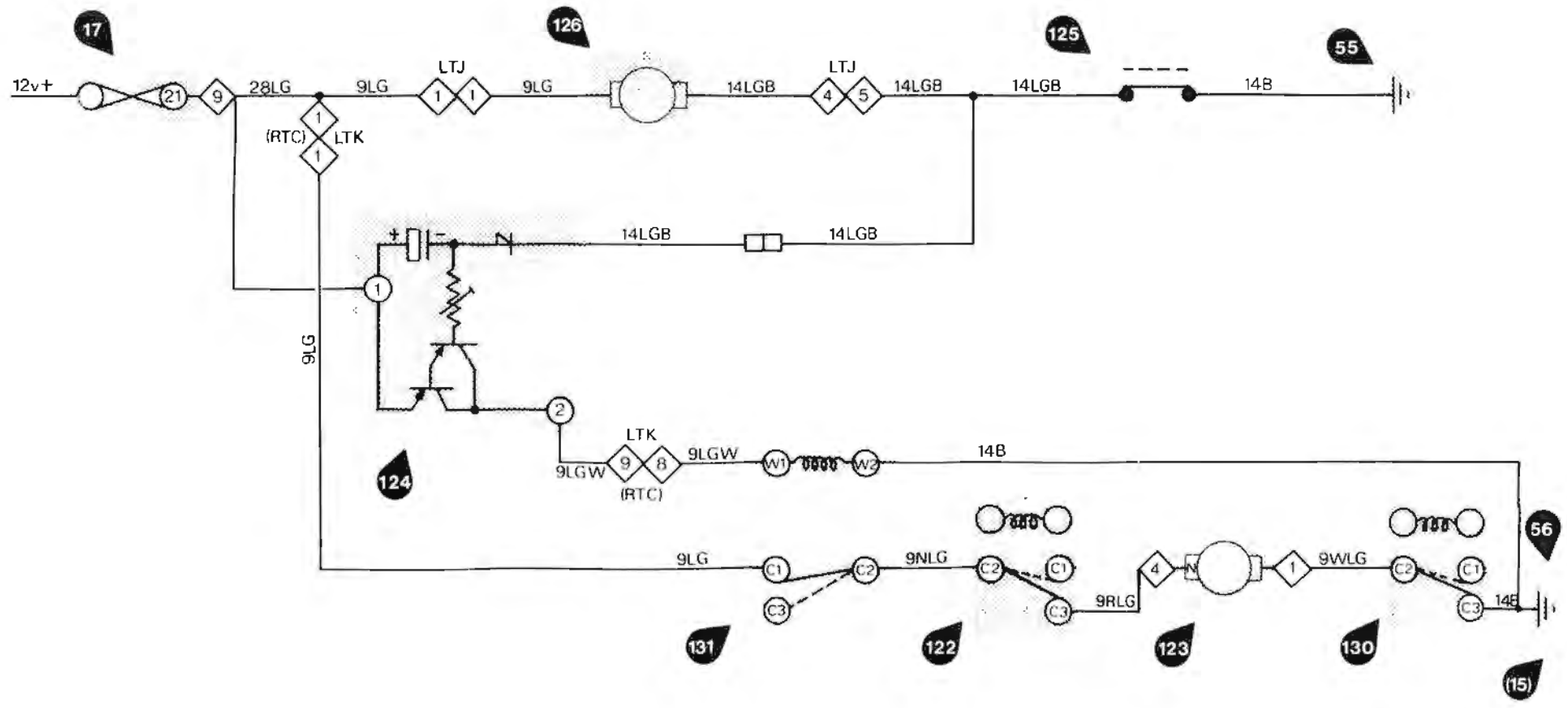

Windscreen wipers and washers

Component location

Silver Shadow II, Bentley T2,

Silver Wraith II, Corniche

Fig. M50

Printed in England

© Rolls-Royce Motors Limited 1977

April 1977

T.S.D. 4200

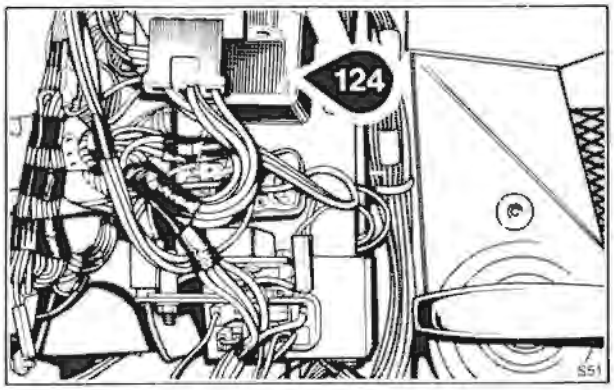

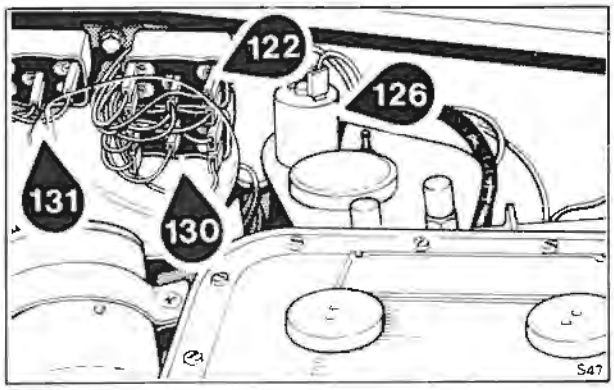

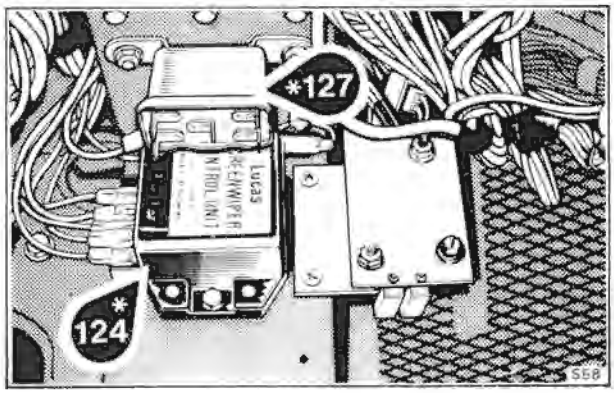

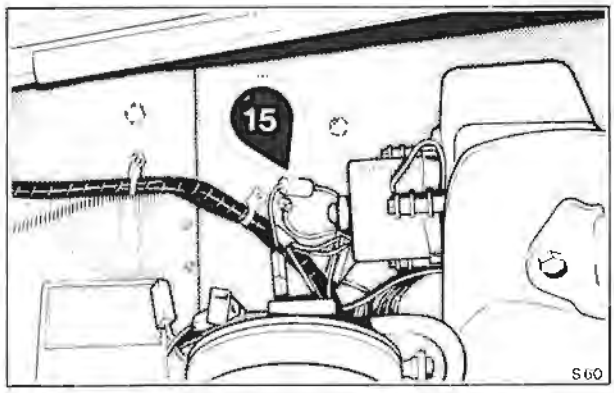

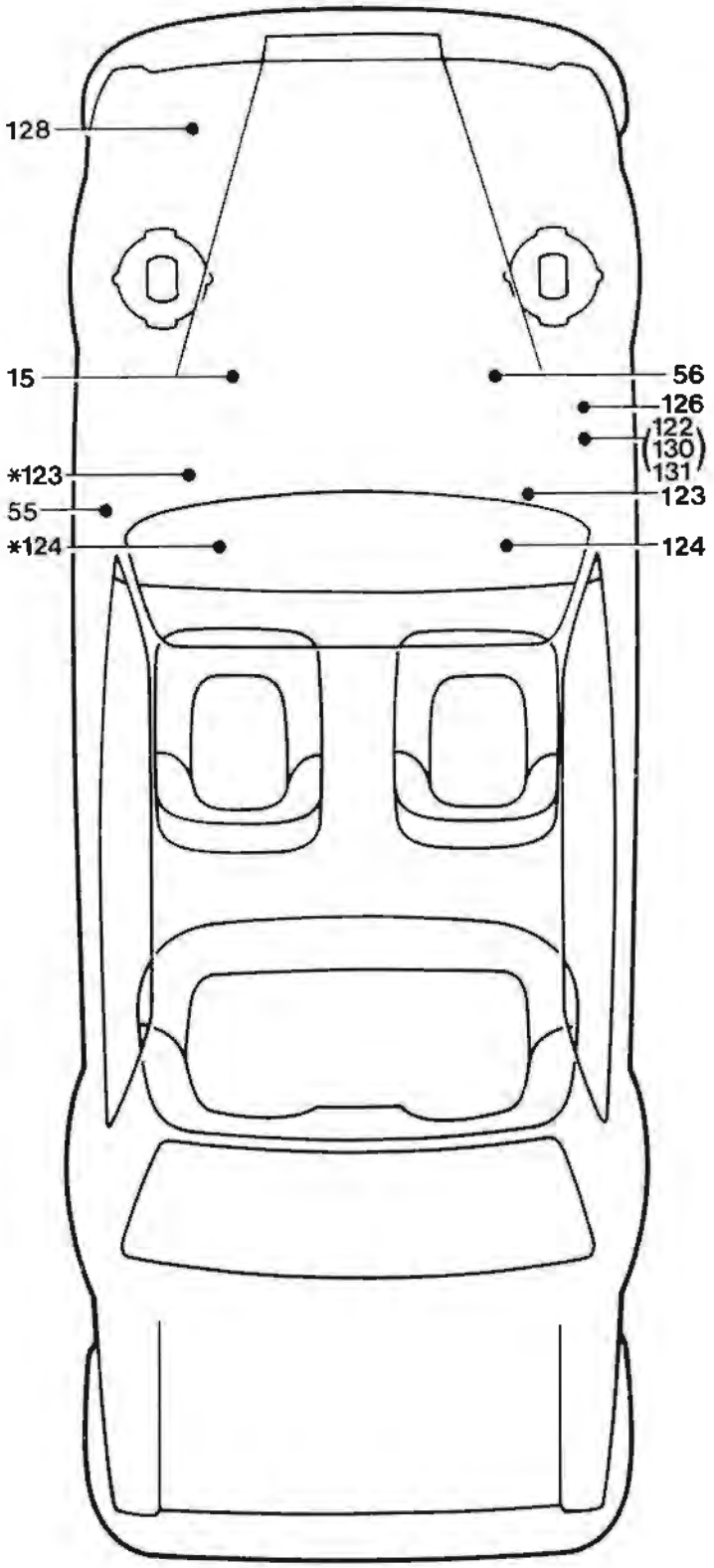

Components

15	Right-hand valance earth
17	Fuseboard
55	Left-hand 'A' post earth
56	Left-hand valance earth
64	Left-hand front earth
120	Radio interference suppressor
121	Screen wiper switch
122	Screen wiper relay (1)
123	Screen wiper motor
124	Screen wiper control unit
125	Screen washer switch
126	Screen washer motor
127	Headlamp wash relay
128	Headlamp wiper motor
129	Headlamp washer motor
130	Screen wiper relay (2)
131	Screen wiper relay (3)

* All left-hand drive

Windscreen wipers and washers

Schematic wiring diagram
Silver Shadow II, Bentley T2,
Silver Wraith II, Corniche
Fig. M51

Printed in England

© Rolls-Royce Motors Limited 1977

T.S.D. 4200 April 1977

© Rolls-Royce Motors Limited 1977
Printed in England

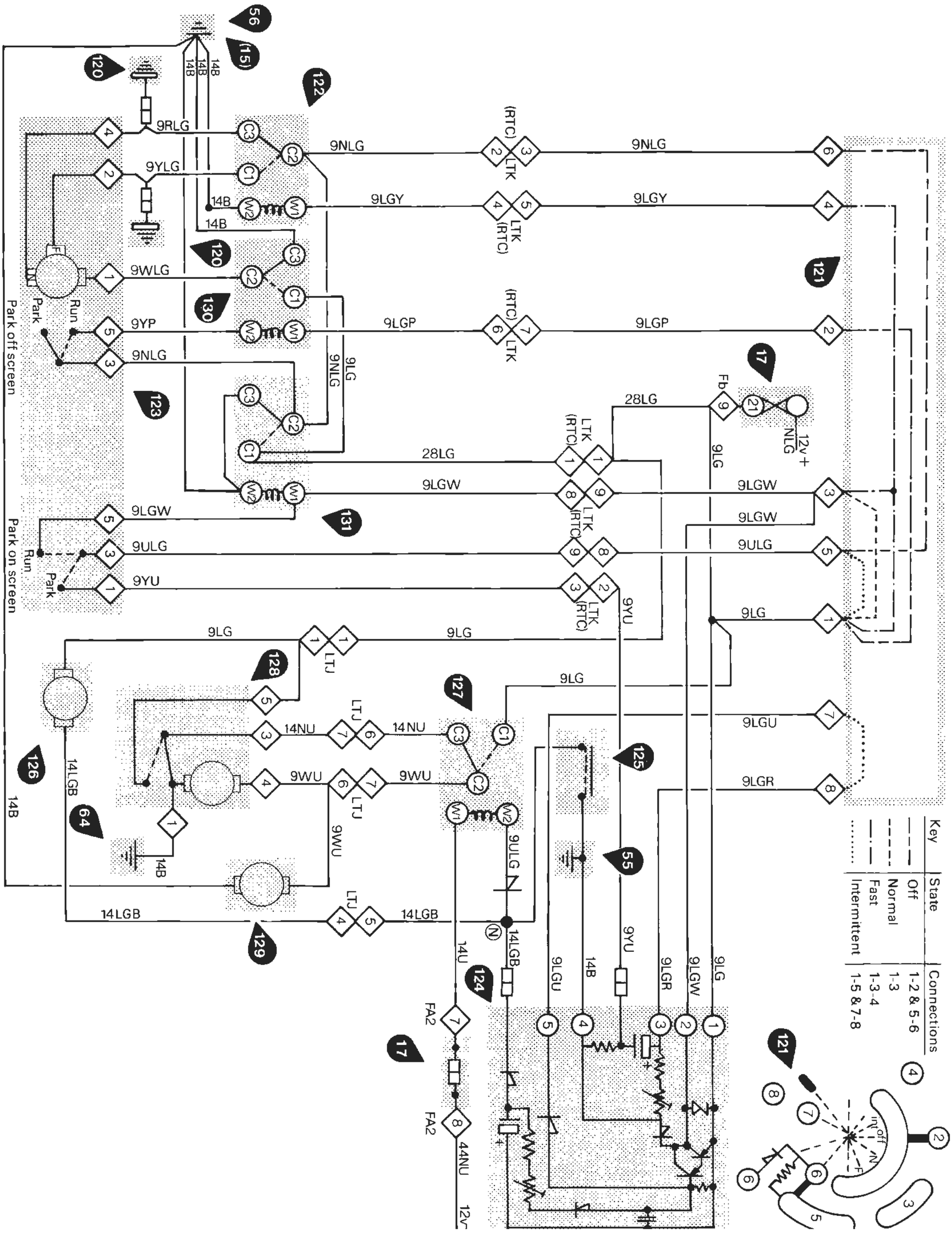

Windscreen wipers and washers

Component location

Camargue

Fig. M52

Printed in England
© Rolls-Royce Motors Limited 1977

April 1977
T.S.D. 4200

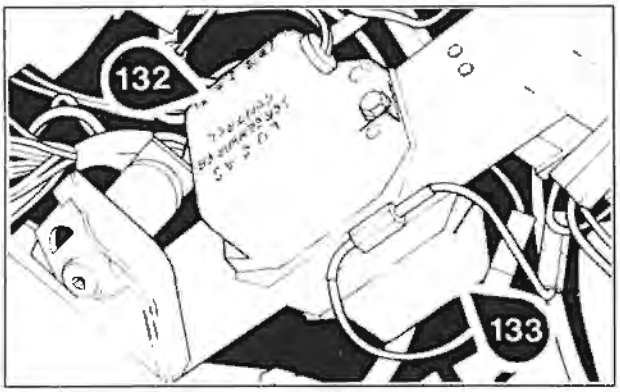

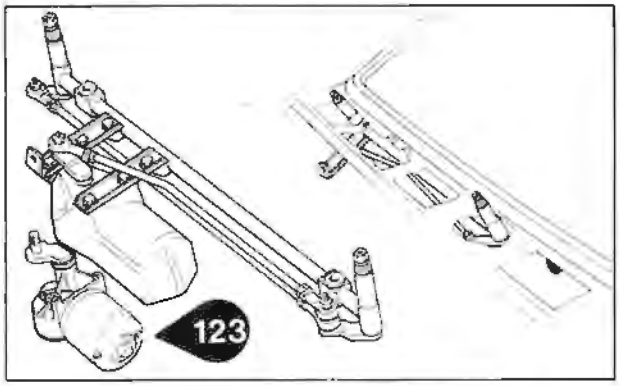

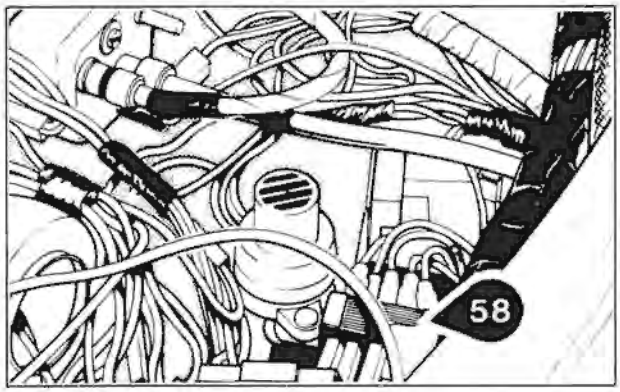

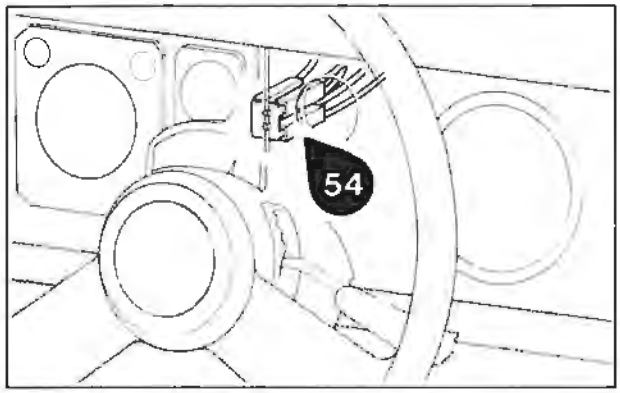

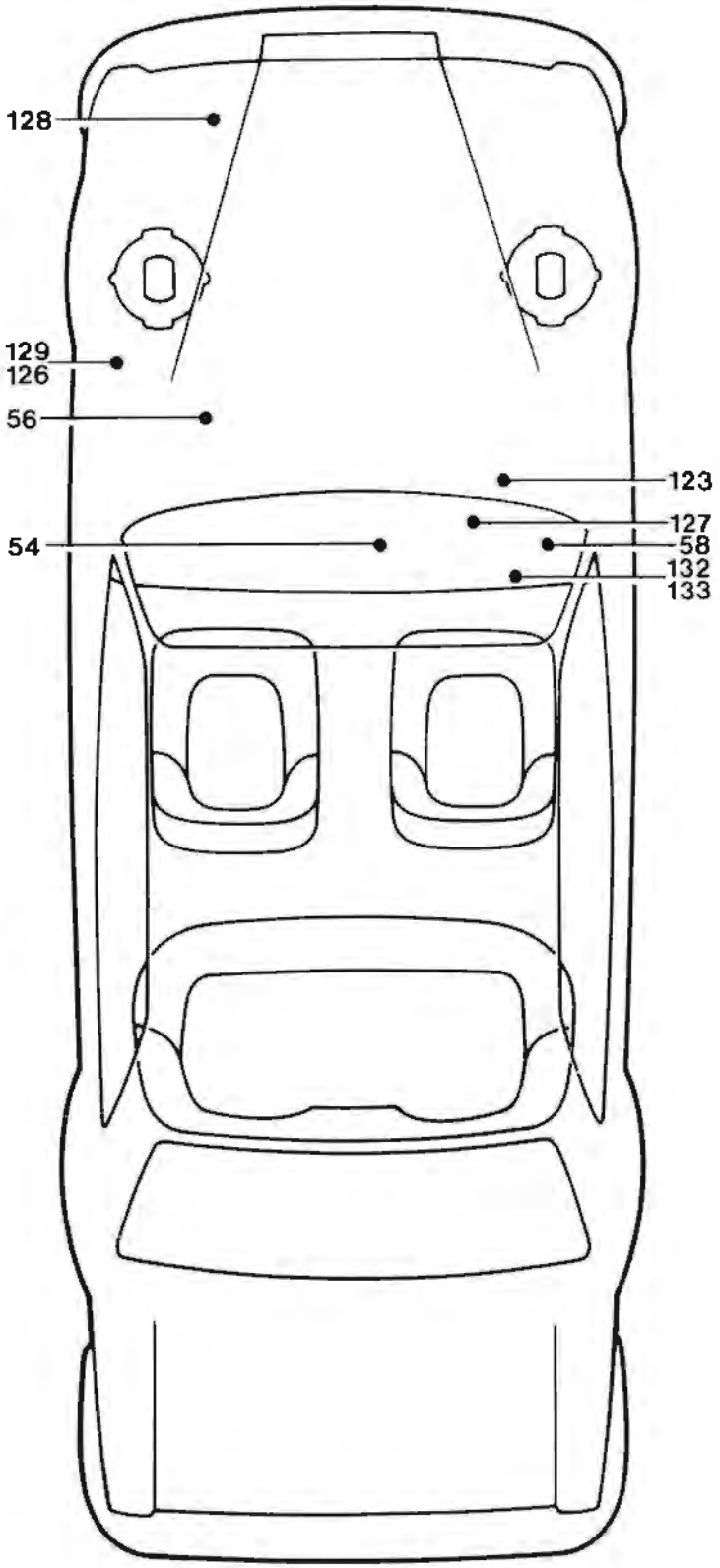

Components

17	Fuseboard
36	Right-hand 'A' post earth
54	Instrument panel earth
56	Left-hand valance earth
58	Diode block
121	Screen wiper switch
123	Screen wiper motor
125	Screen wash switch
126	Screen wash motor
127	Headlamp wash relay
128	Headlamp wiper motor
129	Headlamp wash motor
132	Wash/Wipe control unit
133	Intermittent wipe control unit

Windscreen wipers and washers

Schematic wiring diagram

Camargue

Fig. M53

Printed in England

© Rolls-Royce Motors Limited 1977

T S D 1900 April 1977

© Rolls-Royce Motors Limited 1977
Printed in England

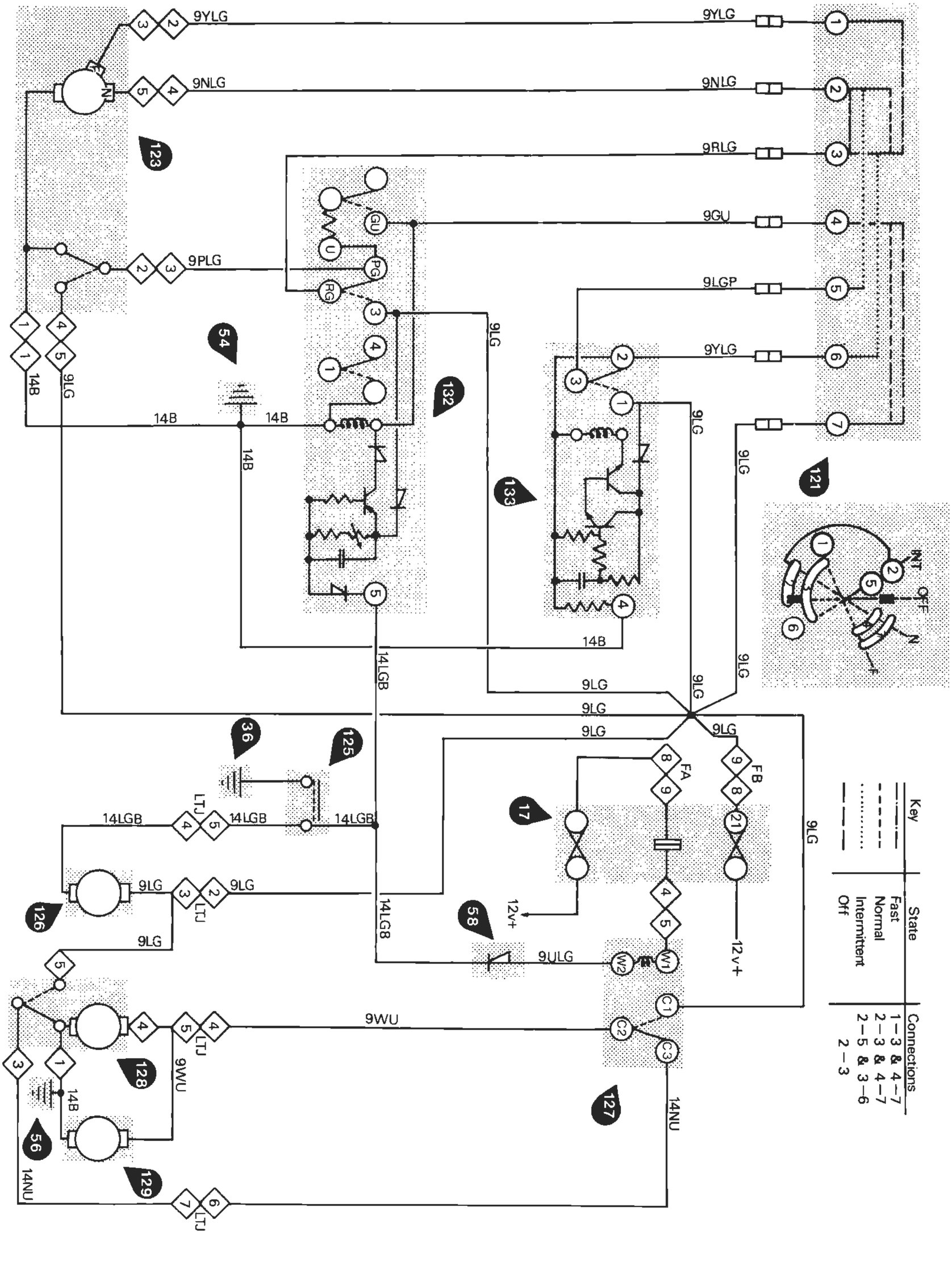

Section M7

Interior lighting
Contents

	Page
Introduction	M7 - 3
Interior lamps delay circuit	M7 - 3
Switches and lamps	M7 - 4
Fault finding procedure	M7 - 4
Fault finding chart	M7 - 5
Component location, right-hand drive	M7 - 7
Schematic wiring diagram, right-hand drive	M7 - 9
Component location, left-hand drive	M7 - 11
Schematic wiring diagram, left-hand drive	M7 - 13

Printed in England
© Rolls-Royce Motors Limited 1977

May 1977
T.S.D. 4200

Printed in England
© Rolls-Royce Motors Limited 1977
May 1977
T.S.D. 4200

Section M7

Interior lighting

Introduction

This section details the interior lamps delay circuit and all interior lamps with their associated switches.

Interior lamps delay circuit

When any door is opened, the door switch activates the delay unit and thereby provides an earth path for the coil of the delay relay which is then energised. Relay contacts C2 to C1 and C2 to C4 are made which connects the interior lamps to a live feed.

The delay unit remains active for 7 seconds after the doors are closed and then the relay is de-energised thereby switching off the lamps.

Interior lamps delay unit - To test

Connect the delay unit as shown in Fig. M54 and momentarily connect terminal 3 to 12v+, the test lamp should illuminate for between 6 and 8 seconds.

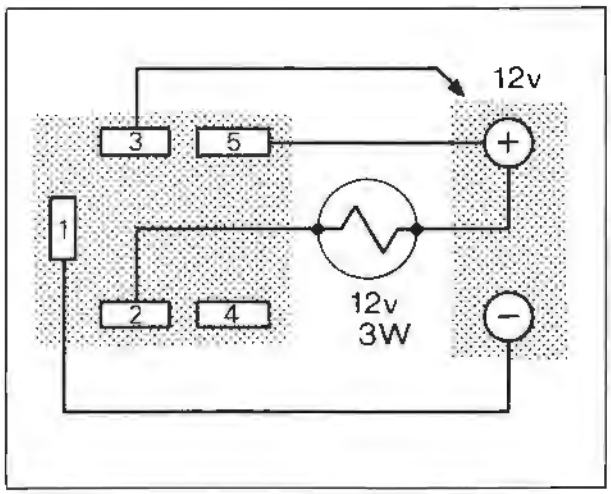

Fig. M54 Delay unit test circuit

Interior lamps delay relay - To test (Fig. M55)

1. Disconnect the cables from C1, C4 and W2.
2. Ensure that the purple cable to C2 and W1 is 'live'.
3. Connect a 12v3w test lamp from C4 to earth and then from C1 to earth, the lamp should remain extinguished.
4. Connect W2 to earth (energising the relay).
5. Again connect the test lamp from C4 to earth and C1 to earth, the lamp should be lit in each case.

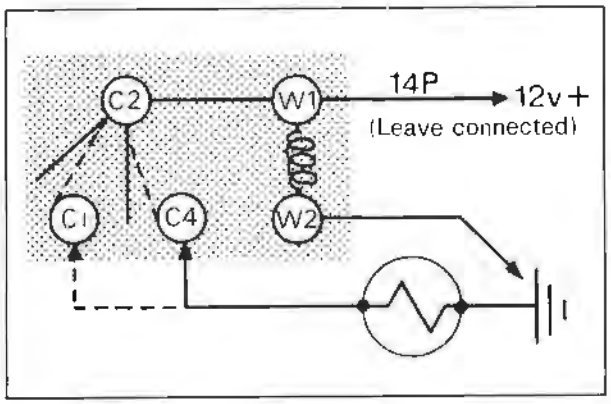

Fig. M55 Relay test circuit

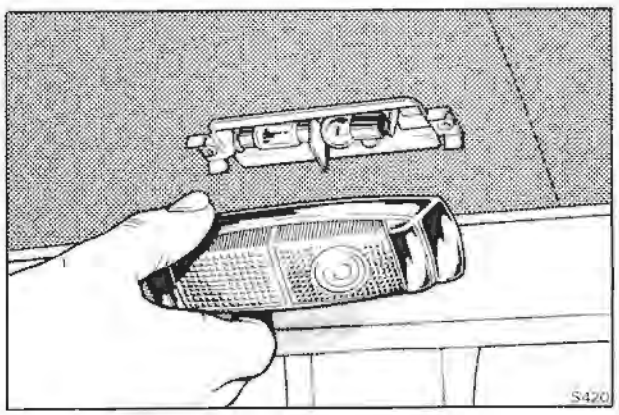

Fig. M56 Interior lamp

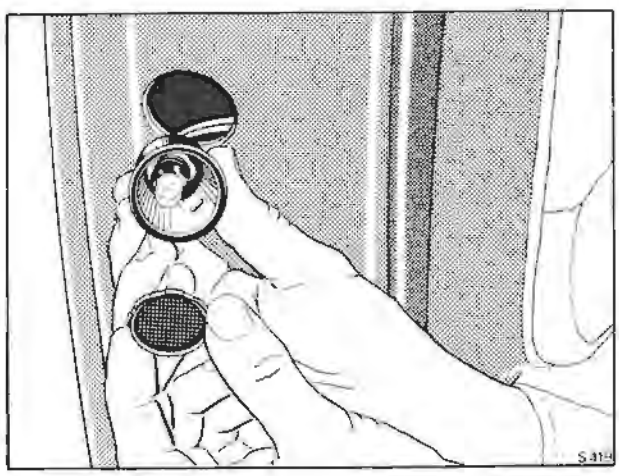

Fig. M57 Door edge warning lamp

Switches and lamps

The switches are shown in Fig. M58. When fitting a switch, ensure that the switches operate correctly.

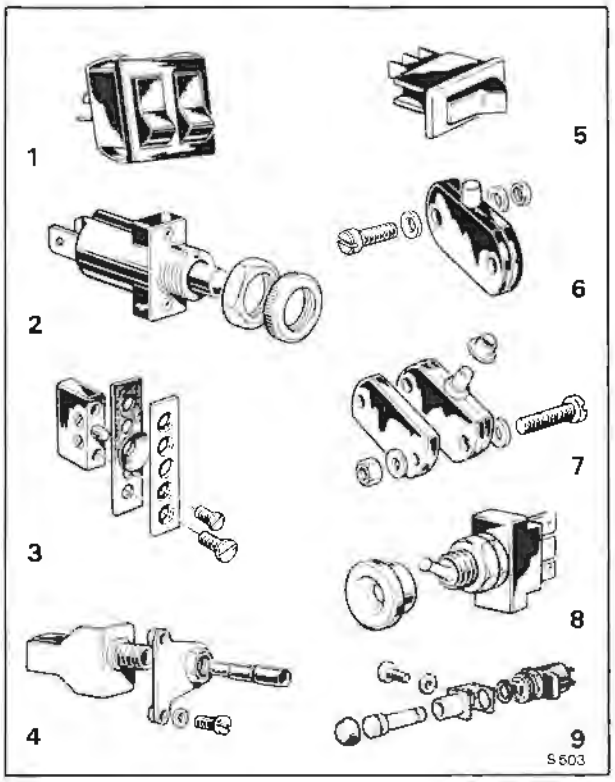

Fig. M58 Interior lighting switches

1 Rear lamp switches - Camargue only
2 Fuseboard switch - Not Camargue
Cubby box switch - Camargue only
3 Door switch - all cars
4 Map lamp switch - Camargue only
5 Rear interior switch - Not Camargue
6 Boot lamp switch - All cars
7 Bonnet lamp switch - All cars
8 Map lamp switch - Not Camargue
9 Cubby box switch - Not Camargue

Fault finding procedure

With the exception of a blown fuse, the faults on the interior lighting circuit can be divided into two groups, one when the lamps will not illuminate and the other when they will not extinguish.

Lamp(s) will not illuminate

Refer to fault diagnosis chart Fig. M59 after testing each suspect bulb.

Lamp(s) will not extinguish

This is usually caused by a faulty switch although it could occur if the lamp is inadvertently connected to any live feed.

To isolate the fault, remove the purple cable from the associated switch, if the lamp is extinguished then the switch is faulty but if the lamp remains lit, then the connection to a live feed must be traced.

If the fault is in the door-operated courtesy lamps, remove the purple cable from one door switch and close the remaining doors. If the lamps are extinguished **after 7 seconds**, the switch is faulty but if the lamps remain lit, repeat the procedure with another switch.

Fuse 'blown'

Replace the fuse. If the fuse 'blows' again, the fault must be isolated by disconnecting the purple cable from all switches and the delay unit and relay. Replace the fuse and replace the purple cables to each switch and inspect the fuse each time. (Refer to wiring diagram).

Section M7

Interior lighting

Fault finding chart
Fig. M59

Printed in England

© Rolls-Royce Motors Limited 1977

T.S.D. 4200 May 1977

Interior lighting

Before using this chart, verify that the faulty bulbs are not broken.

How to use this chart

1. Determine which bulb or combination of bulbs are not working.
2. Scrutinise each horizontal line of the chart to determine which combination of spots corresponds to the bulbs not working.
3. Trace along the horizontal line to find the possible cause of the fault.
4. Refer to the wiring diagram to obtain the connector pin numbers and component identification.

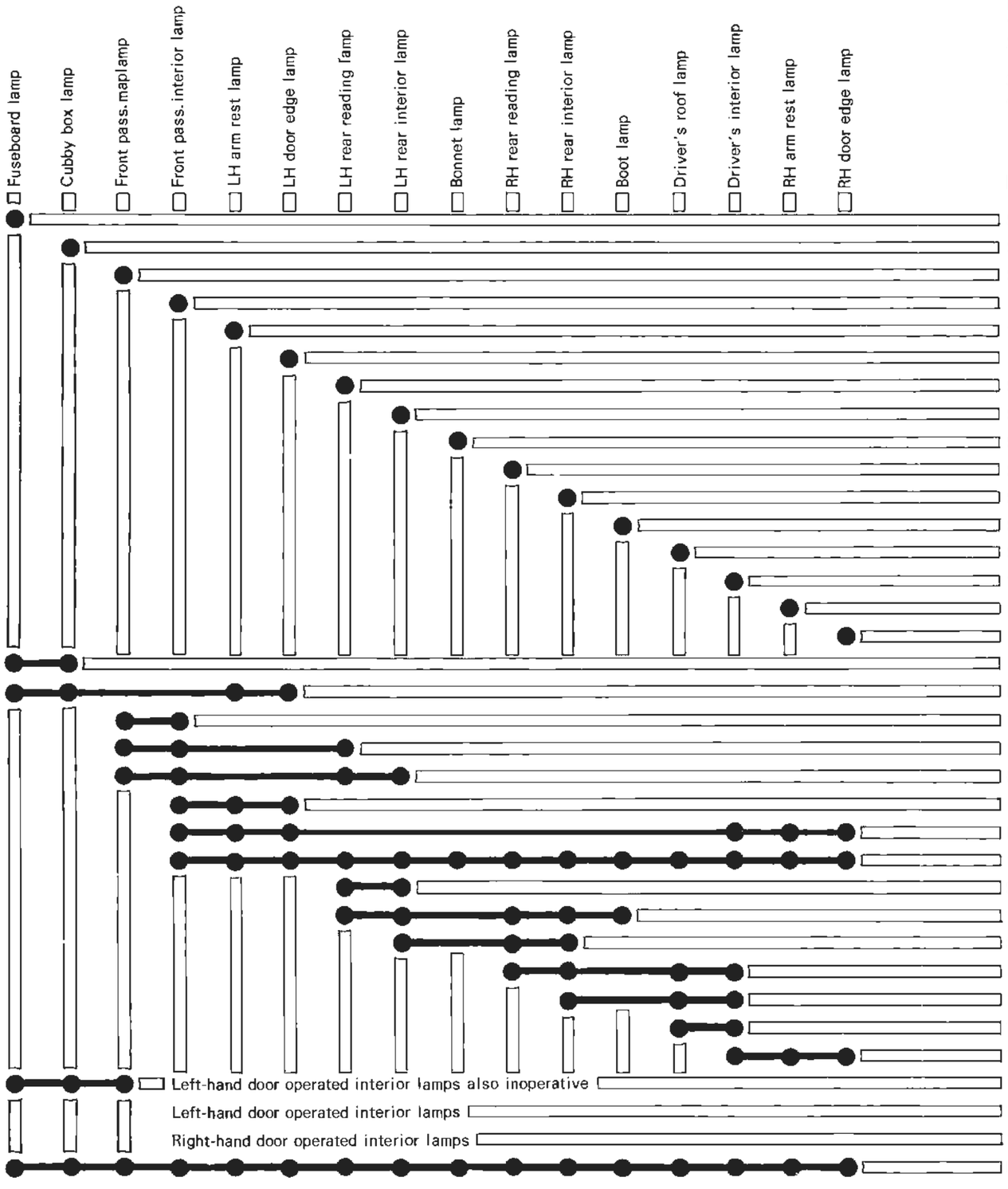

Possible cause

- Switch 102. 14PR cable. 14P cable.
- Switch 103. 14PR cable. 14P cable. 14B cable from 84 to 83.
- Switch 104. 14PU cable. 14P cable. LB9. 14B cable from 85 to 86.
- 14PW cable from LB9 to 86. 14B cable from 86 to 89.
- 14PW cable from LB9 to 87. 14B cable from 87 to 68 to LB9 to 55.
- 14PW cable from LB9 to LD5 to 88. 14B cable from 88 to 115 to LD5 to 55.
- Switch 107. 14PY cable from 107 to 89.
- Switch 107. 14PG cable from 107 to 90. 14PG cable from 107 to 90. 14PG cable from 90 to WD7 to 93.
- Switch 108. 14P cable from RTA to 108. 14PR cable from 108 to 91. 14B cable from 91 to 52.
- Switch 111. 14PY cable from 111 to 92.
- Switch 111.
- Switch 112. 14P cable from WD7 to 112. 14PR cable from 112 to 94.
- Switch 113. 14P cable to 113. 14PU cable from 113 to RB9 to 95.
- 14PW cable from RB9 to 96. 148 cable from 96 to 95.
- 14PW cable from RB9 to 97. 14B cable from 97 to 69. 28B cable from 69 to RB9 to 36. RB9.
- 14PW cable from RB9 to RD7 to 98. 14B cable from 98 to 114. 28B cable from 114 to RD7 to 36.
- 14B cable from 83 to 55.
- Earth connection 55.
- 14B cable between 86 and 89.
- 14B cable between 89 and 90.
- Earth connection 10. 14B cable between 90 and 10.
- 14PW cable between relay 101 and LB9.
- Delay unit 100 or relay 101. 14B cable from 100 to 36. Poor earth 36.
- 14P cable from fuse (pin 3).
- Switch 107. 14P cable from 107 and WD7.
- 14P cable between RB9 and WD7.
- Switch 111. 14P cable from WD7 to 111.
- 14B cable from 92 to 44. Poor earth connection 44.
- 14B cable from 92 to 93.
- 14B cable from 93 to 95.
- 14PW cable from relay 101 contact C1 to RB9.
- 14P cable from fuse (pin 5).
- 14PS cable from LB9 to delay unit 100.
- 14PS cable from RB9 to delay unit 100.
- Fuse blown or no live feed to fuse on 28N cable.

● **Indicates bulb not lit** ●—● **Combination of bulbs not lit**

Printed in England
© Rolls-Royce Motors Limited 1977
T.S.D. 4200 May 1977

Interior lighting

Component location Right-hand drive
Fig. M60

Printed in England
© Rolls-Royce Motors Limited 1977
May 1977
T.S.D. 4200

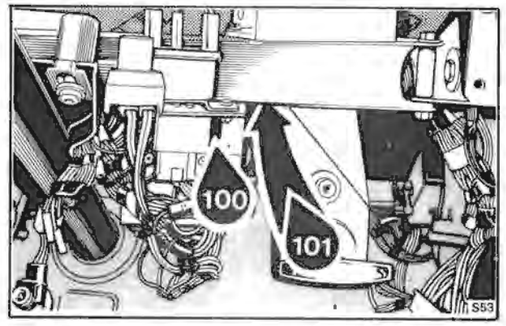

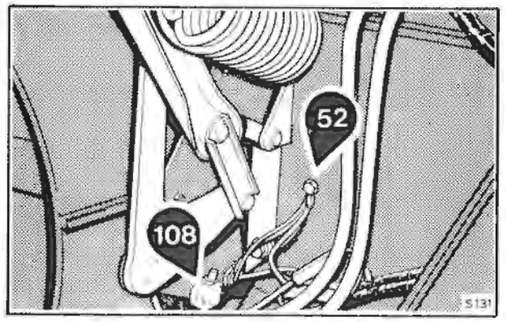

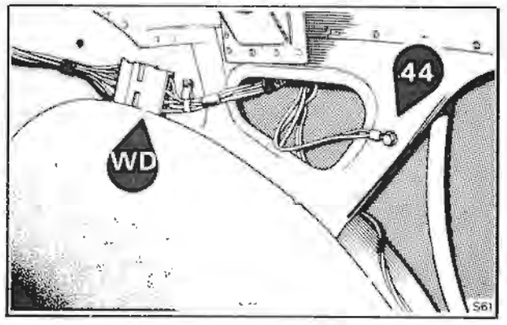

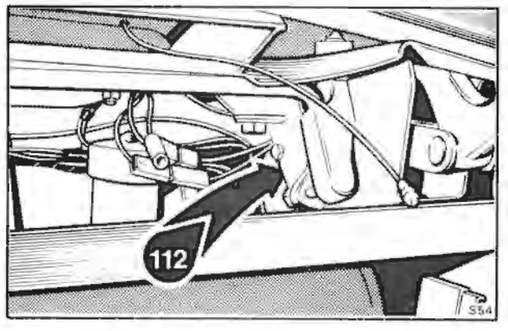

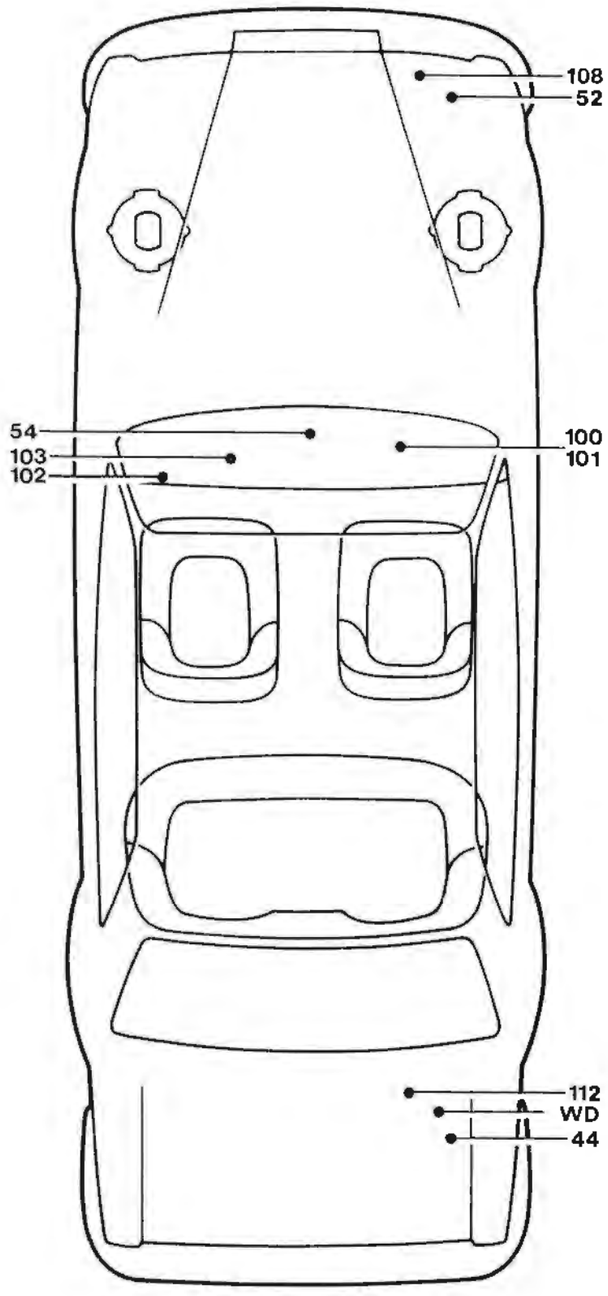

Components

10	Left-hand boot earth
17	Fuseboard
36	Right-hand 'A' post earth
44	Right-hand boot earth
52	Right-hand front earth
54	Instrument panel earth
55	Left-hand 'A' post earth
68	Left-hand rear cigar lighter
69	Right-hand rear cigar lighter
83	Fuseboard lamp
84	Cubby box lamp
85	Front passenger's map lamp
86	Front passenger's interior lamp
87	Left-hand armrest lamp
88	Left-hand door edge lamp
89	Left-hand rear reading lamp
90	Left-hand rear interior lamp
91	Bonnet lamp
92	Right-hand rear reading lamp
93	Right-hand rear interior lamp
94	Boot lamp
95	Driver's roof lamp
96	Driver's interior lamp
97	Right-hand armrest lamp
98	Right-hand door edge lamp
99	Seat belt warning lamps
100	Interior lamps delay unit
101	Interior lamps delay relay
102	Fuseboard switch
103	Cubby box switch
104	Front passenger's map lamp switch
105	Left-hand front door switch
106	Left-hand rear door switch
107	Left-hand rear lamps switch
108	Bonnet lamp switch
109	Right-hand front door switch
110	Right-hand rear door switch
111	Right-hand rear lamps switch
112	Boot lamp switch
113	Driver's roof lamp switch
114	Right-hand front door solenoid
115	Left-hand front door solenoid

WD	Window demist socket
LD	Left-hand door socket
RD	Right-hand door socket
LB	Left-hand body socket
RB	Right-hand body socket

Interior lighting

Schematic wiring diagram
Right-hand drive
Fig. M61

S 122
Printed in England
© Rolls-Royce Motors Limited 1977
T.S.D. 4200 May 1977*

© Rolls-Royce Motors Limited 1977
Printed in England

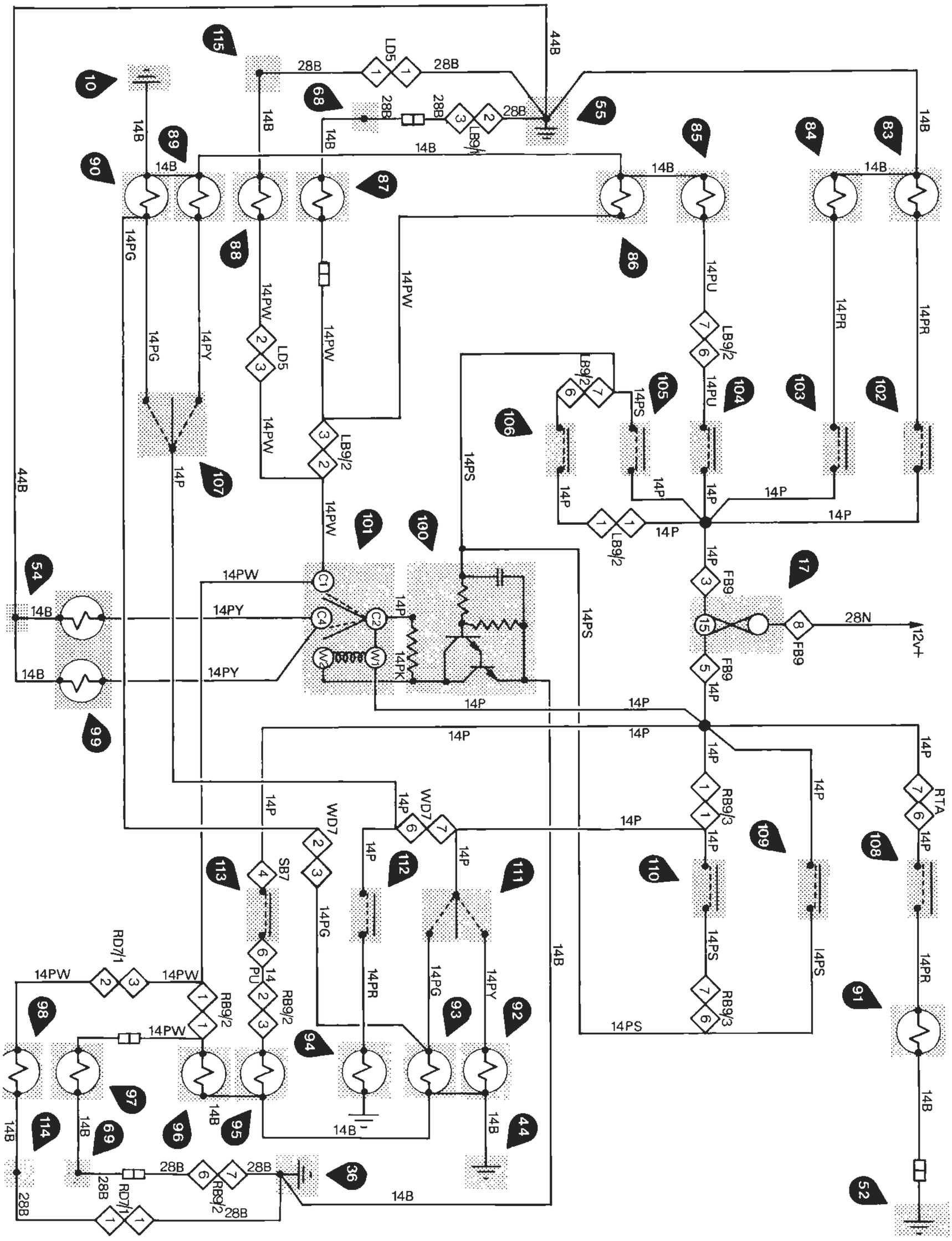

Interior lighting

Component location Left-hand drive
Fig. M62

Printed in England
© Rolls-Royce Motors Limited 1977
May 1977
P.S.D. 4200

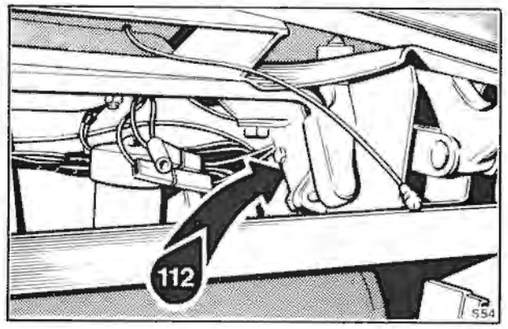

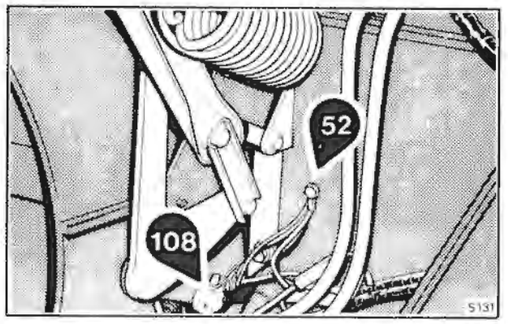

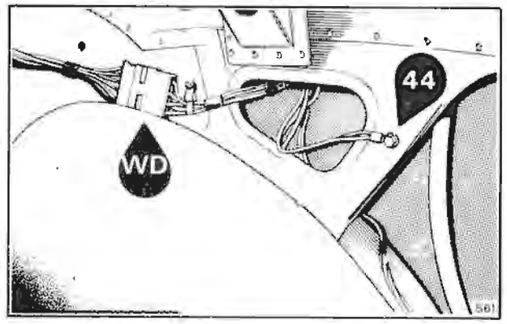

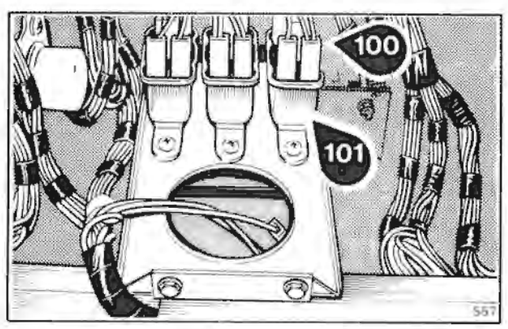

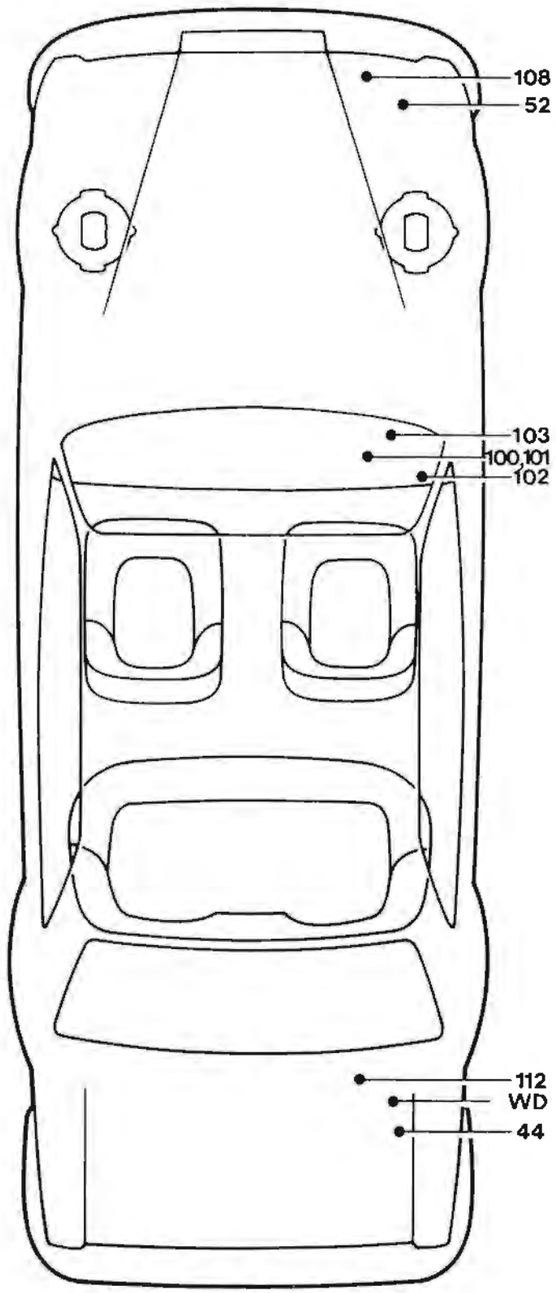

Components

10 Left-hand boot earth
17 Fuseboard
36 Right-hand 'A' post earth
44 Right-hand boot earth
52 Right-hand front earth
54 Instrument panel earth
55 Left-hand 'A' post earth
68 Left-hand rear cigar lighter
69 Right-hand rear cigar lighter
83 Fuseboard lamp
84 Cubby box lamp
85 Front passenger's map lamp
86 Front passenger's interior lamp
87 Left-hand armrest lamp
88 Left-hand door edge lamp
89 Left-hand rear reading lamp
90 Left-hand rear interior lamp
91 Bonnet lamp
92 Right-hand rear reading lamp
93 Right-hand rear interior lamp
94 Boot lamp
95 Driver's roof lamp
96 Driver's interior lamp
97 Right-hand armrest lamp
98 Right-hand door edge lamp
100 Interior lamps delay unit
101 Interior lamps delay relay
102 Fuseboard switch
103 Cubby box switch
104 Front passenger's map lamp switch
105 Left-hand front door switch
106 Left-hand rear door switch
107 Left-hand rear lamps switch
108 Bonnet lamp switch
109 Right-hand front door switch
110 Right-hand rear door switch
111 Right-hand rear lamps switch
112 Boot lamp switch
113 Driver's roof lamp switch
114 Right-hand front door solenoid
115 Left-hand front door solenoid

WD Window demist socket
LD Left-hand door socket
RD Right-hand door socket
LB Left-hand body socket
RB Right-hand body socket

Interior lighting

Schematic wiring diagram

Left-hand drive

Fig. M63

Printed in England

© Rolls-Royce Motors Limited 1977

T.S.D. 4200 May 1977

© Rolls-Royce Motors Limited 1977
Printed in England

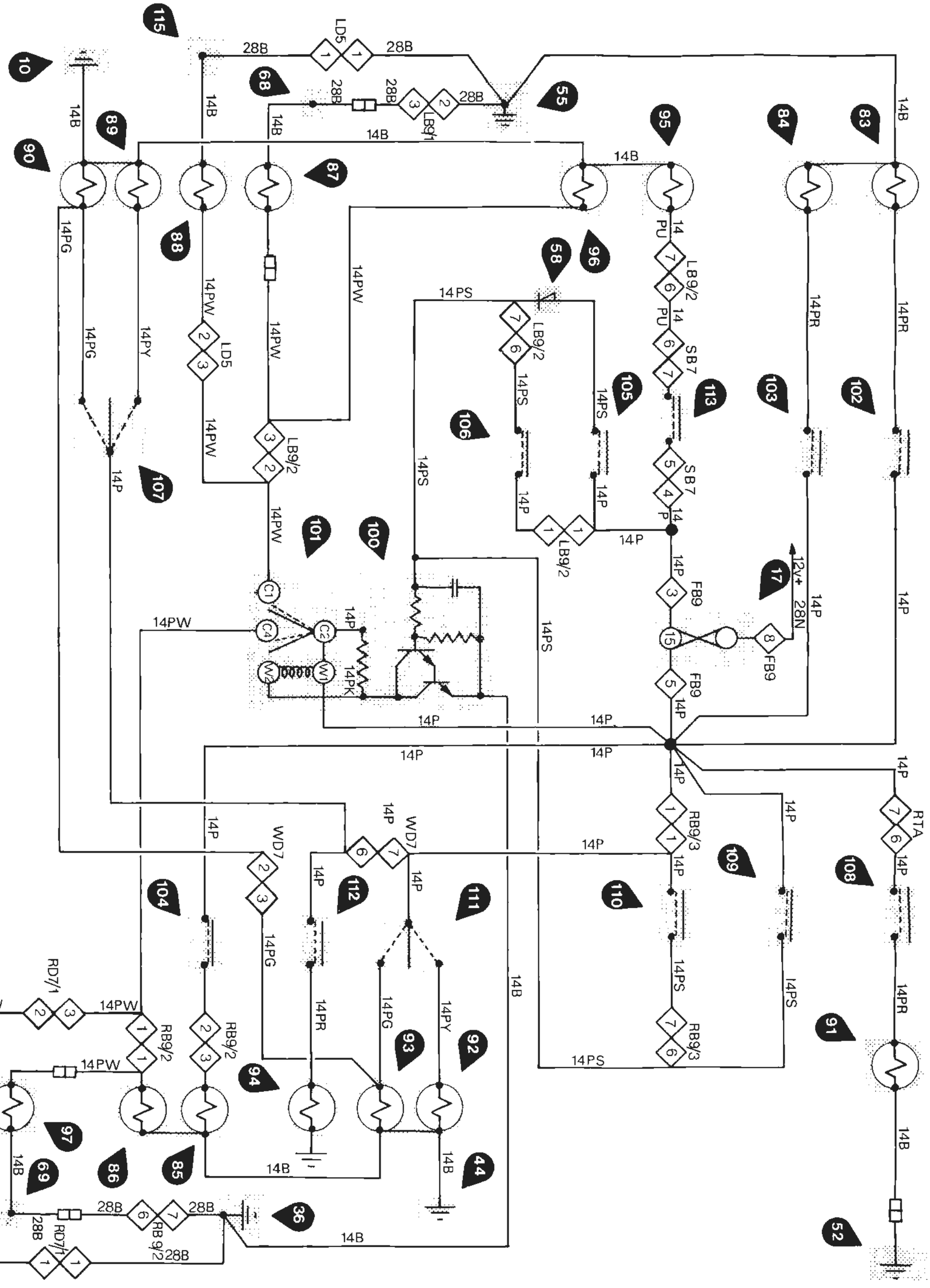

Section M8

Exterior lighting
Contents

Cars prior to car serial numbers

Silver Shadow II - SRX 34573
Silver Wraith II - LRG 34601
Bentley T2 - SBH 34775
Corniche Saloon - CRH 34830
Corniche Convertible - DRX 33029

	Page
Introduction	M8 - 3
Headlamps	M8 - 3
Head flash relay and switch	M8 - 3
Head safety circuit	M8 - 4
Foglamps	M8 - 4
Rear foglamps relay and switch	M8 - 4
Stoplamp failure relay	M8 - 5
Direction indicator and hazard warning	M8 - 5
Fault finding chart Head, tail, side, side marker and number plate lamps	M8 - 7
Fault finding chart Hazard, direction, stop, reversing and foglamps	M8 - 9
Fault diagnosis	M8 - 11
Component location Head, tail, side, side marker and number plate lamps	M8 - 13
Wiring diagram Head, tail, side, side marker and number plate lamps	M8 - 15
Component location Hazard, direction, stop and reversing lamps	M8 - 17
Wiring diagram Hazard, direction, stop and reversing lamps	M8 - 19
Component location and wiring diagram Foglamps	M8 - 21

For cars from car serial numbers

Silver Shadow II - SRX 34573
Silver Wraith II - LRG 34601
Bentley T2 - SBH 34775
Corniche Saloon - CRH 34830
Corniche Convertible - DRX 33029

Refer to Section M8 Supplement number 1

Printed in England
© Rolls-Royce Motors Limited 1979

July 1979
TSD 4200

Printed in England
© Rolls-Royce Motors Limited 1977
May 1977
T.S.D. 4200

Section M8

Exterior lighting

Introduction
There are three wiring diagrams covering this section, one for front and rear foglamps, one for head, side, tail and number plates and one for direction indicators, hazard warning, reverse and stoplamps.

Headlamps
Headlamp bulb - To renew (see Fig. M64)

1. Remove the fairing securing screw, raise the lower edge of the fairing and unhook it from the two upper retainers; remove the seal.
2. Release the three bezel retaining screws, do not remove completely. Turn the bezel anti-clockwise until the heads of the screws can pass through the enlarged portion of the slots, remove the bezel and at the same time retain the light unit in its mounting frame. Remove the light unit.
3. Detach the terminal socket from the bulb, open the retaining spring clip and remove the bulb from the reflector.

When fitting a new bulb, ensure that the groove and tang of the reflector and bulb assembly are aligned correctly.

Important
If the bulb glass is accidently touched by hand it must be cleaned with surgical spirit before fitting.

Sealed beam unit
The sealed beam unit is removed in a similar manner to the headlamp bulb except that the terminal socket is detached from the sealed beam unit.

Alignment and setting
When the headlamps have been disturbed, the headlamp beams should be checked and reset if necessary using a Lucas Beam Tester Mk III in accordance with the manufacturers instructions.

Head flash relay and switch (see Fig. M65)
When the head flash switch is operated, it energises the head flash relay which connects the main beam lamps and warning lamp to fuse 7.

Head flash relay - To test (see Fig. M66)

1. Switch on the ignition and using a test lamp verify that the 28UG cable to C2 and W2 is 'live'.
2. Connect a test lamp between earth and the 14UW cables at C1, the lamp should remain extinguished.
3. Connect W1 (14UB cable) to earth, the test lamp should illuminate.

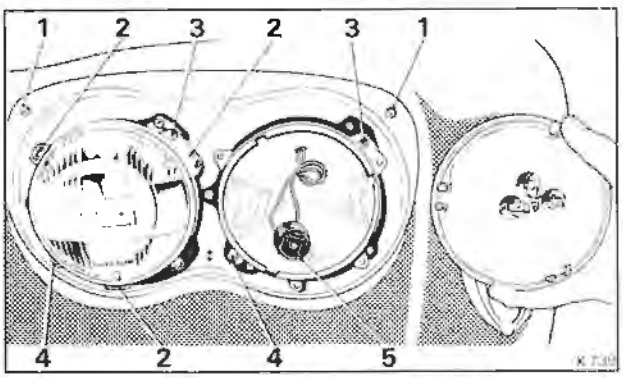

Fig. M64 Access to sealed beam units
1 Location pegs
2 Securing screw
3 Vertical beam adjusting screw
4 Horizontal beam adjusting screw
5 Lamp socket

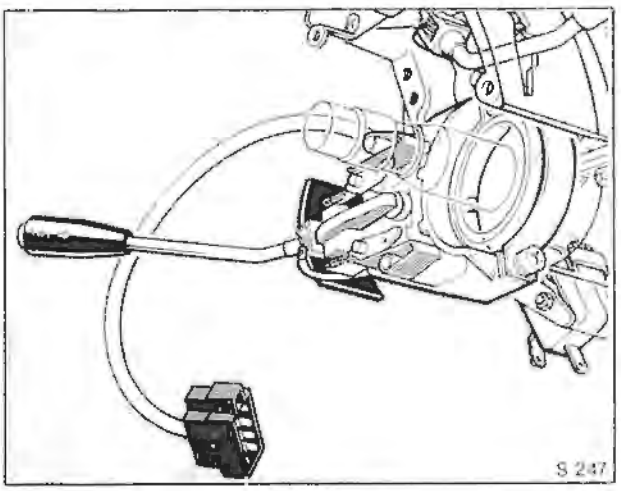

Fig. M65 Direction indicator and head flash switch

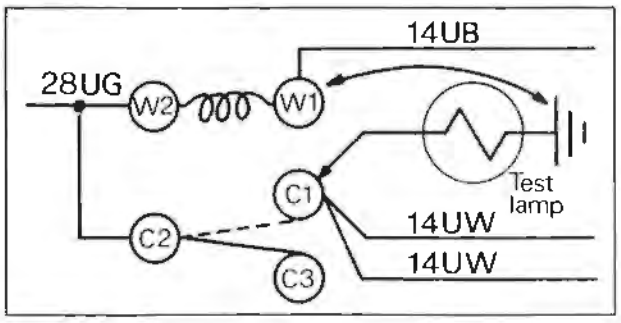

Fig. M66 Head flash relay test circuit

Head safety circuit

If a fault occurs in the primary headlamp circuit, the head safety relay connects the dipped headlamps to a secondary circuit thereby enabling at least one headlamp to function.

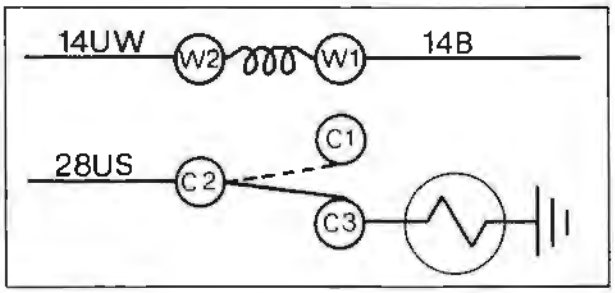

Fig. M67 Head safety relay test circuit

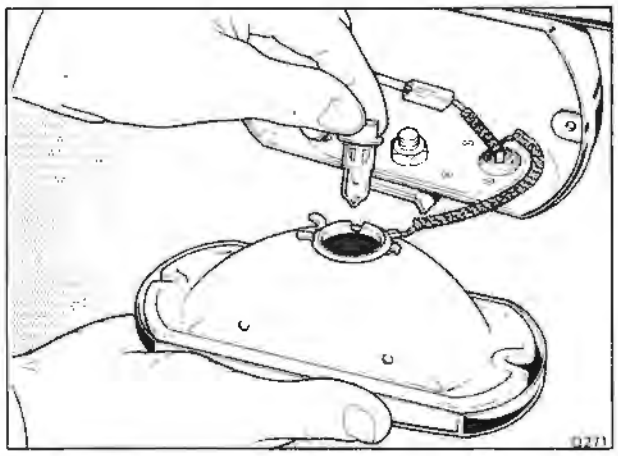

Fig. M68 Front foglamp

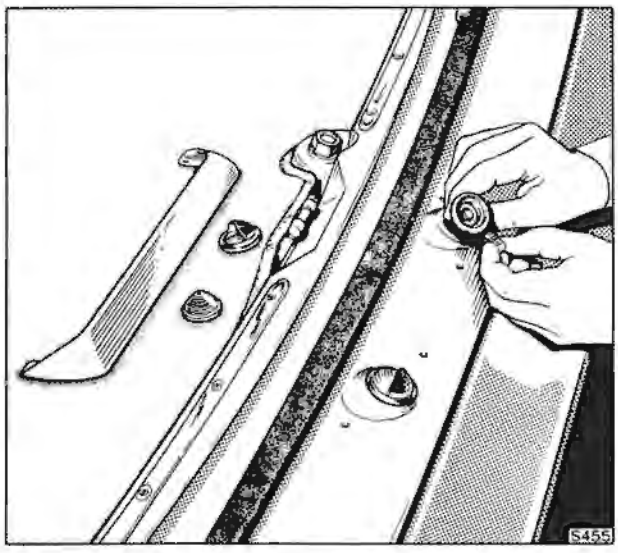

Fig. M69 Number plate bulb fitting

Head safety relay

The relay is energised whenever the primary headlamp circuit is functioning but if a fault occurs the relay is then de-energised which connects contact C2 to C3 thereby connecting the headlamps to the secondary circuit breaker.

Head safety relay - To test (see Fig. M67)

1. Disconnect the 28UR cable from C3 and connect a test lamp between C3 and earth. Insulate the 28UR cable.
2. Switch on the headlamps and verify that the 14UW cable at W2 and the 28US cable at C2 are 'live'. The test lamp connected to C3 should be extinguished.
3. Disconnect the 14B cable from W1 and verify that the test lamp is lit.
4. Switch off the headlamps and replace the cables.

Foglamps

The front foglamps are lit when the main lighting switch is set to FOG, the rear foglamps are lit when the REAR FOG switch is depressed and the main lighting switch is set to FOG or HEAD. The REAR FOG warning panel will also illuminate.

Front foglamp bulb - To renew (see Fig. M68)

1. Remove the protective cover and unscrew the retaining screws.
2. Withdraw the lens unit together with the chromed surround.
3. Detach the Lucar connector, remove the spring and withdraw the bulb.
4. When fitting a new bulb, **do not touch the glass part of the bulb with the hand.** If the glass has been accidently touched it must be cleaned with surgical spirit before fitting.

Rear foglamp bulb

When fitting a rear foglamp bulb, ensure that the drain hole in the lamp surround is facing downwards.

Rear foglamp switch and relay

The rear foglamp switch and relay enables the rear foglamps to be used independantly of the front foglamps.

Rear foglamp relay - To test

1. Switch the main lighting switch to HEAD.
2. Connect a test lamp between earth and C1, then between earth and C2, the lamp should be lit in each case.
3. Connect the test lamp between earth and C3, the lamp should remain extinguished.
4. Switch the main lighting switch to FOG.
5. Connect a test lamp between earth and C3, then between earth and C2, the lamp should be lit in each case.
6. Connect the test lamp between earth and C1, the lamp should remain extinguished.

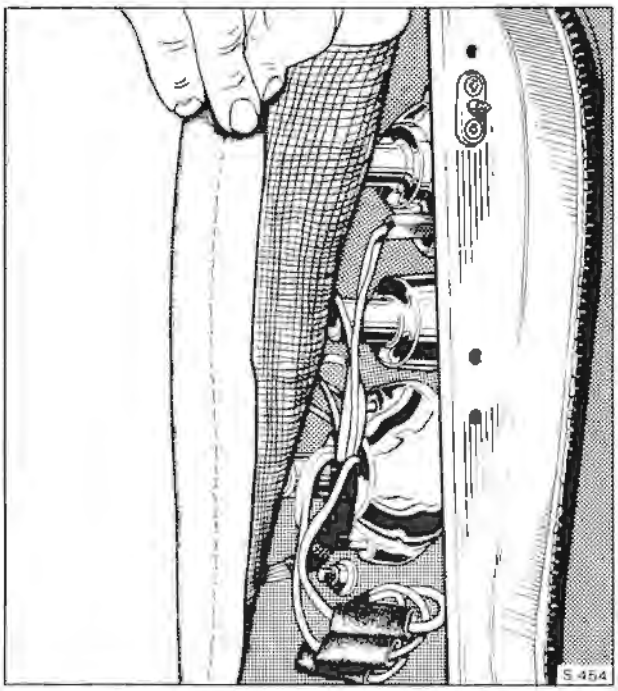

Fig. M70 Rear lamps

Stoplamp failure relay

When both stoplamps are working, the current through the two coils of the relay oppose each other and the reed switch remains open. If a stoplamp fails, the current flowing through one coil will close the reed switch which is connected to the warning lamp. (Refer to Section M4 for details of the warning lamp circuit).

Direction indicators and hazard warning

The direction indicator unit (flasher) is a Lucas type 8FL and is connected to fuse 9.

The hazard warning flasher unit is a Lucas type 9FL and is connected to fuse 13.

Printed in England
© Rolls-Royce Motors Limited 1977
May 1977
T.S.D. 4200

Section M8

Exterior lighting

Fault finding chart

Head, tail, side, side marker and number plate lamps

Fig. M71

Head, tail, side, side marker and number plate lamps

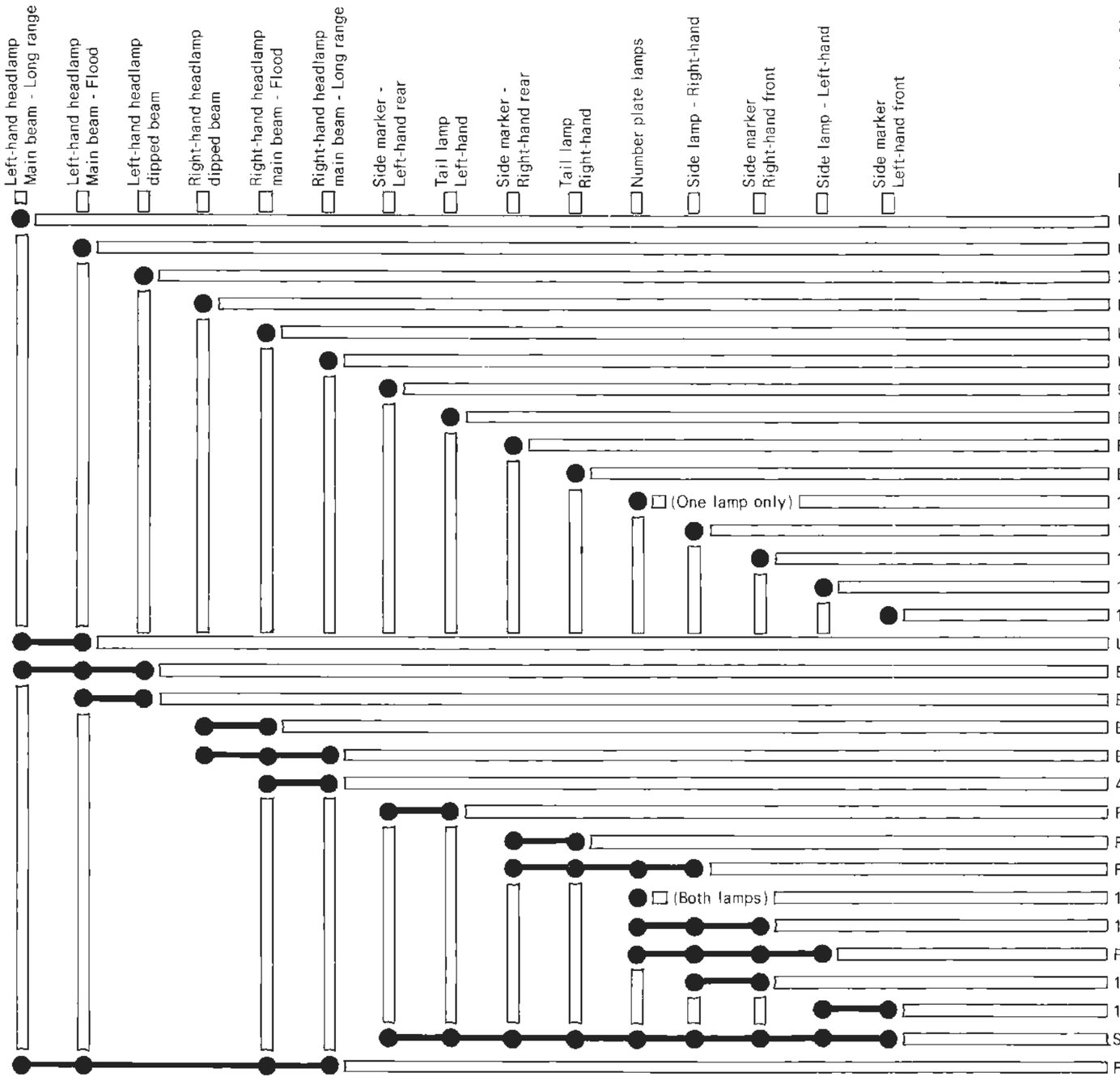

Before using this chart, verify that the bulbs are not broken

How to use this chart

1. Determine which bulb or combination of bulbs are not working.
2. Scrutinise each horizontal line of the chart to determine which combination of spots corresponds to the bulbs not working.
3. Trace along the horizontal line to find the possible cause of the fault.
4. Refer to the wiring diagram to obtain the connector pin numbers and component identification.

Possible cause

- UW cable or earth cable from 137 to Lucar connector.
- UW cable from 138 to Lucar connector.
- 28UR cable from 139 to Lucar connector. Relay 135. Fuse 6.
- Fuse 5. 28UR cable from fuseboard to 140 via RTB and Lucar connector.
- UW cable from 141 to Lucar connector.
- UW cable or earth cable from 142 to Lucar connector.
- 9RK or 14B cables from 143 to 142.
- Broken bulb only.
- RG cable or 14B cable from 145 to 146.
- Broken bulb only.
- 14R cable or 14B cable between lamps.
- 14R or 14B cables from 148 to Lucar connectors.
- 14R or 14B cables from 149 to Lucar connectors.
- 14R or 14B cables from 150 to Lucar connectors.
- 14R or 14B cables from 151 to Lucar connectors.
- UW cables from LTL to Lucar. UW cable from 134 to Lucar. Relay 134.
- Earth cable from 64 to Lucar connector.
- Earth cable from 138 to Lucar connector.
- Earth cable from 141 to Lucar connector.
- Earth cable from 56 to Lucar connector.
- 44UW cable from RTB to Lucar connector.
- Fuse 16. 9RK cable from F89/1 to LB9 to 144. Earth cable from 144 to 10.
- Fuse 17. 14RG cable from FB9/2 to RB9 to 146. Earth cable from 146 to 44.
- Faulty earth 44.
- 14R cable from RTA to RB9 to 147. Earth cable from 147 to 44.
- 14R cable from WL9 to RTA.
- Fuse 19.
- 14R cable from RTA to Lucar connector. Earth cable to 56.
- 14R cable from FB9/2 to LTM to Lucar connector. Earth cable to 64.
- Switchbox terminal 5. 28NO cable from SB9 to FB9/1.
- Fuse 7. 28UG cable to 134 via LTM. 14UB cable at 134 and 136 via LTL. 14 cable at 36.

● ▭▭▭ Indicates bulb not lit

●—●—● Combination of bulbs not lit

For other faults, refer to Fault diagnosis

© Rolls-Royce Motors Limited 1977

Printed in England

T.S.D. 4200 May 1977

Section M8

Exterior lighting

Fault finding chart

Hazard, direction, stop, reversing and fog lamps

Fig. M72

Printed in England
© Rolls-Royce Motors Limited 1977

Printed in England
© Rolls-Royce Motors Limited 1977

Hazard, direction, stop and reversing lamps

Before using this chart, verify that the bulbs are not broken

How to use this chart

1. Determine which bulb or combination of bulbs are not working.
2. Scrutinise each horizontal line of the chart to determine which combination of spots corresponds to the bulbs not working.
3. Trace along the horizontal line to find the possible cause of the fault.
4. Refer to the wiring diagram to obtain the connector pin numbers and component identification.

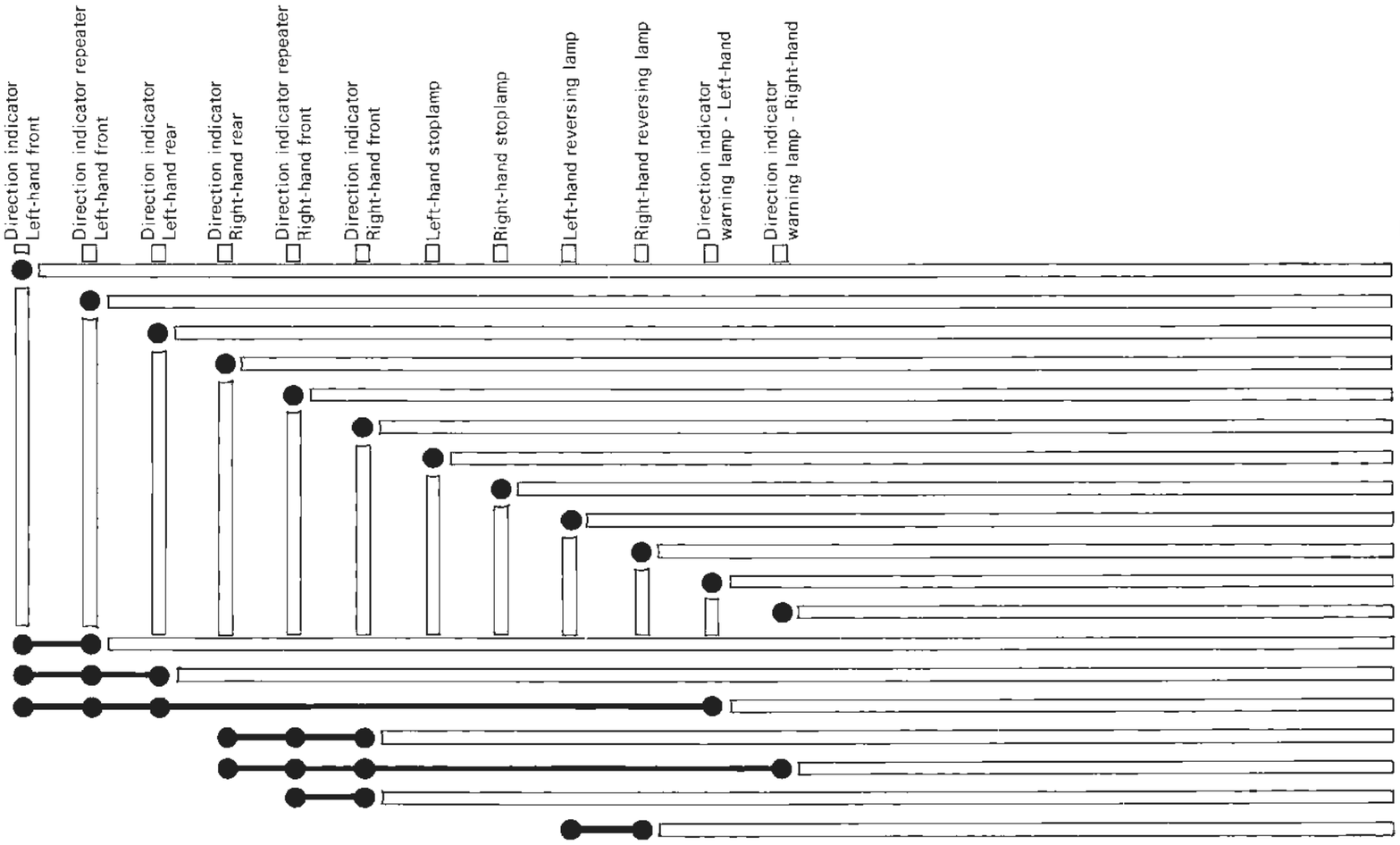

Possible cause

- 14GP cable from LTM to 158 . 14B cable from 158 to 64 .
- 14GP cable from LTM to 159 . 14B cable from 159 to 56 .
- 14GP cable from LB9 to 160 . 14B cable from 160 to 10 .
- 14GY cable from RB9 to 161 . 14B cable from 161 to 44 .
- 14GY cable from RTA to 162 . 14B cable from 162 to 15 .
- 14GY cable from RTA to 163 . 14B cable from 163 to 52 .
- 14YN cable from 46 to WD7 to 47 . 14B cable from 47 to 10 .
- 14YN cable from 46 to 48 . 14B cable from 48 to 44 .
- 14B cable from 164 to 10 .
- 14B cable from 165 to 44 . 14WN cable from 164 to WD7 to 165 .
- 14GP cable from 152 to 154 .
- 14GY cable from 152 to 155 .
- 14GP cable from LB9 to LTB .
- 14GP cable from 152 to LB9 .
- 152 faulty . 62 faulty . 14GR cable between 62 and 152 .
- 14GY cable from 152 to RB9 .
- 152 faulty . 62 faulty . 14GW cable between 62 and 152 .
- 14GY cable from RB9 to RTA .
- 153 faulty . 14WN cable from 153 to LTH to LB9 to 164 .

Indicates bulb not lit

Combination of bulbs not lit

Foglamps

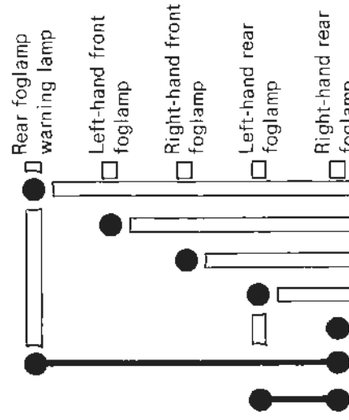

- 14B cable from 166 to 36 via OC7, PD, 77, 78 .
- Fuse . 14UY cable from fuse to LTC to 167 . 14B cable from 167 to 64 .
- Fuse . 14UY cable from fuse to RTB to 168 . 14B cable from 168 to 52 .
- 14UN cable from 170 to 169 . 14B cable from 170 to 169 .
- 14B cable from 170 to Lucar connector .
- 166 . 61 . 14PN cable from 61 to 166 .
- 14UN cable from 166 to 170 via RB9 .

S 545

T.S.D. 4200 May 1977

Section M8

Exterior lighting
Fault diagnosis

Malfunction	Possible cause	Action
Headlamps stay on 'dipped beam'	Faulty thermal cut-out	Substitute thermal cut-out.
	Faulty dipswitch	On the dipswitch, verify that the 44U cable is 'live' then test the UW and UK cables when operating the dipswitch.
Headlamps stay on 'main' beam	Faulty dipswitch	Repeatedly depress the dipswitch and test for permanent live feed on UW cable.
Lamps dim momentarily approximately every 24 seconds	Short circuit	Check the following cables: 28US from head safety relay to left-hand toeboard socket M and fuseboard
No left-hand dip beam and lamps dim momentarily approximately every 24 seconds	Short circuit	Check the following cables: 28UR from lamp to head safety relay. 28UR from lamp to LTL. 28UR from fuseboard to LTL.
Incorrect flashing rate - one side only	Incorrect wattage bulb	Substitute bulb.
Incorrect flashing rate - both sides	Faulty flasher unit	Substitute unit.
	Incorrect system voltage	Measure the voltage between fuse 9 and earth.
	Incorrect wattage bulb	Substitute bulbs.
Both direction indicator warning lamps flashing simultaneously	Poor earth	Bridge across to speedometer casing.
Hazard warning system permanently flashing	Faulty hazard warning switch	Verify that the hazard warning switch is fully engaged.
	Faulty direction indicator switch	Disconnect direction indicator switch socket.

Refer to charts for lamp failure

Printed in England
© Rolls-Royce Motors Limited 1977

Exterior lighting

Component location

Head, tail, side, side marker and number plate lamps

Fig. M73

Printed in England
© Rolls-Royce Motors Limited 1977

May 1977
T.S.D. 4200

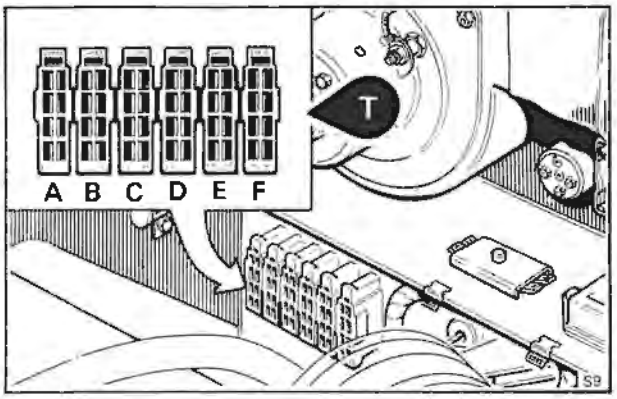

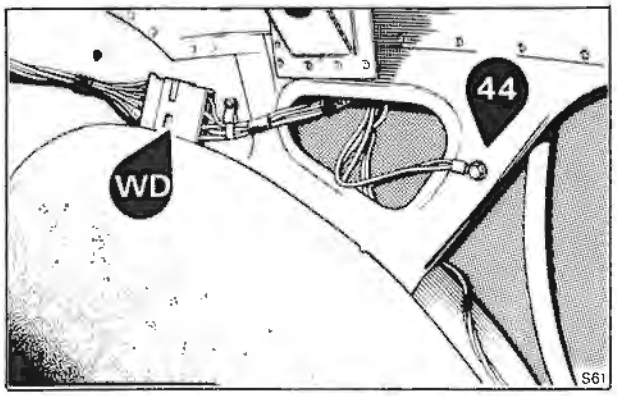

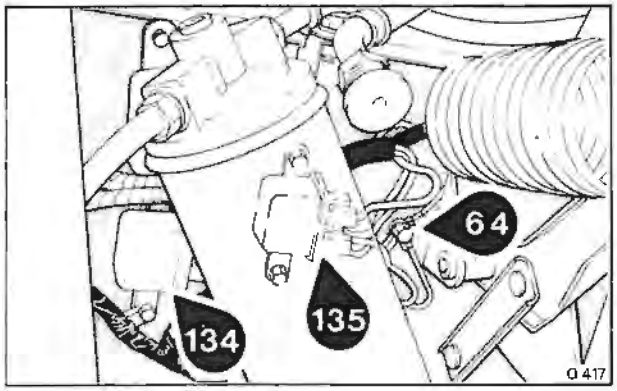

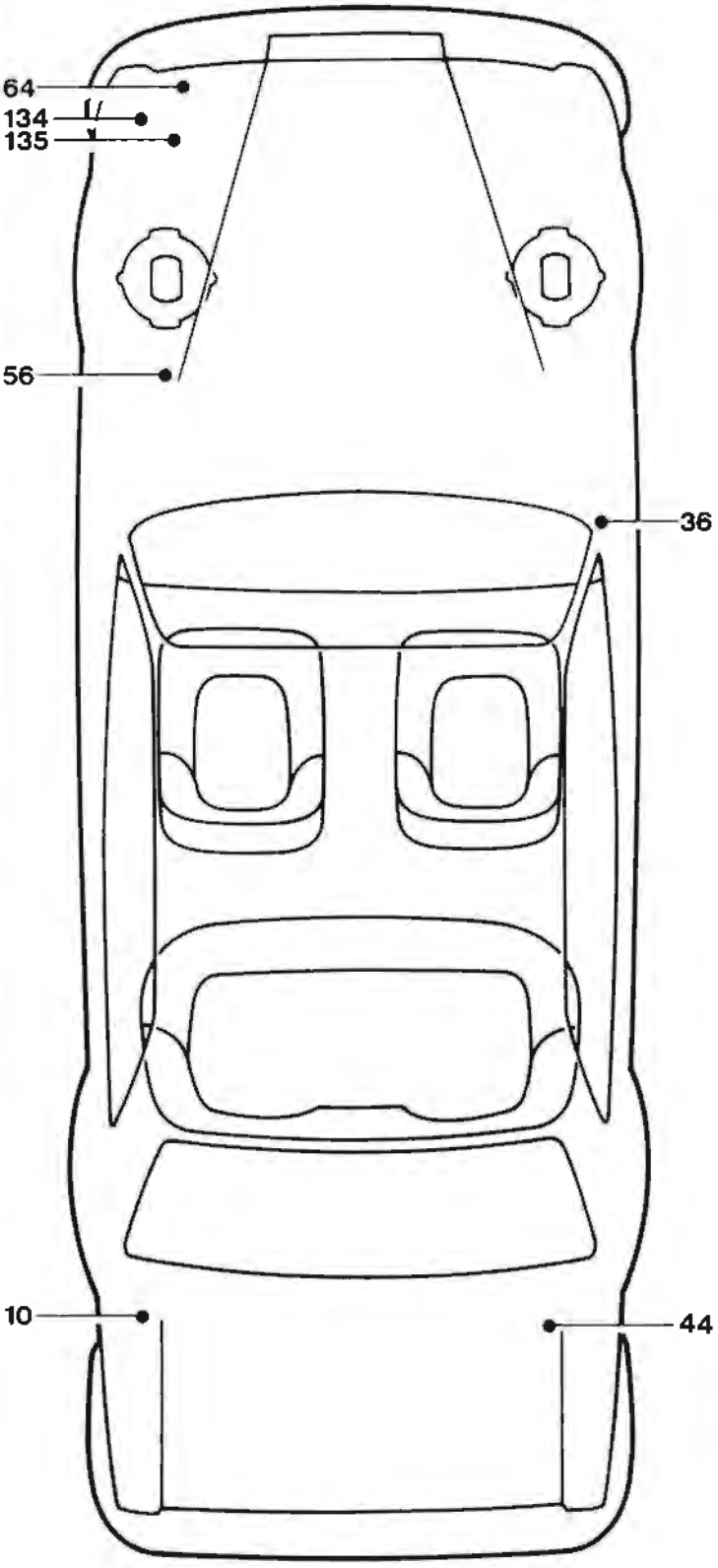

Components

5 Ignition switch
10 Left-hand boot earth
17 Fuseboard
36 Right-hand 'A' post earth
44 Right-hand boot earth
56 Left-hand valance earth
64 Left-hand front earth
78 Main beam warning lamp
116 Main lighting switch
117 Dipswitch
134 Head flash relay
135 Head safety relay
136 Head flash switch
137 Left-hand main beam headlamp (long range)
138 Left-hand main beam headlamp (flood)
139 Left-hand dipped beam headlamp
140 Right-hand dipped beam headlamp
141 Right-hand main beam headlamp (flood)
142 Right-hand main beam headlamp (long range)
143 Left-hand rear side marker
144 Left-hand tail lamp
145 Right-hand rear side marker
146 Right-hand tail lamp
147 Number plate lamps
148 Right-hand sidelamps
149 Right-hand front sidemarks
150 Left-hand sidelamp
151 Left-hand front sidemarker

WD Window demist socket
T Toeboard sockets
DI Direction indicator socket
SB Switchbox socket
B Body sockets

Exterior lighting

Schematic wiring diagram

Head, tail, side, side marker and number plate lamps

Fig. M74

Printed in Finland

© Rolls-Royce Motors Limited 1977

© Rolls-Royce Motors Limited 1977
Printed in England

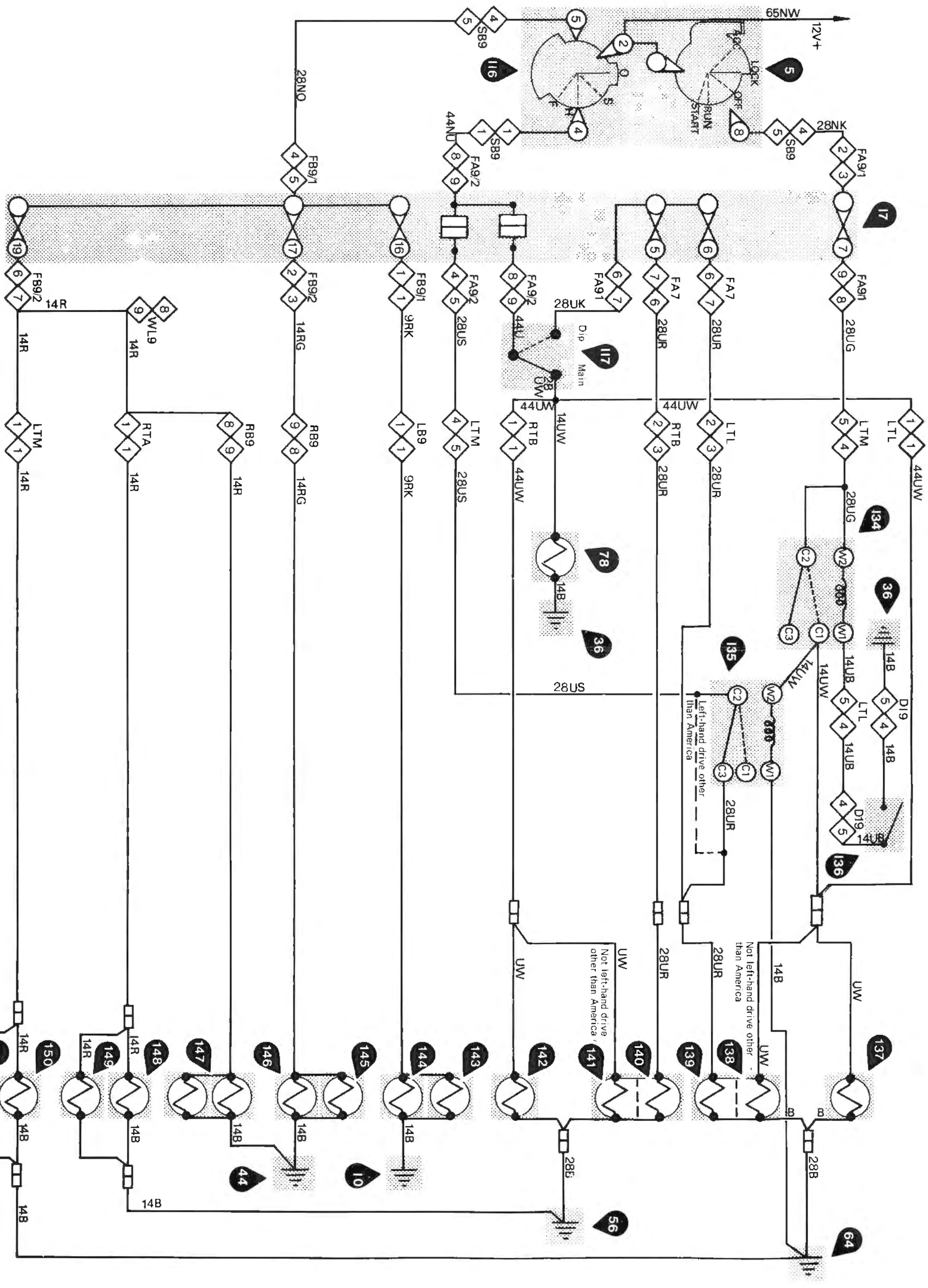

Exterior lighting

Component location

Hazard, direction, stop and reversing lamps

Fig. M75

Printed in England

© Rolls-Royce Motors Limited 1977

May 1977

P.S.D. 4200

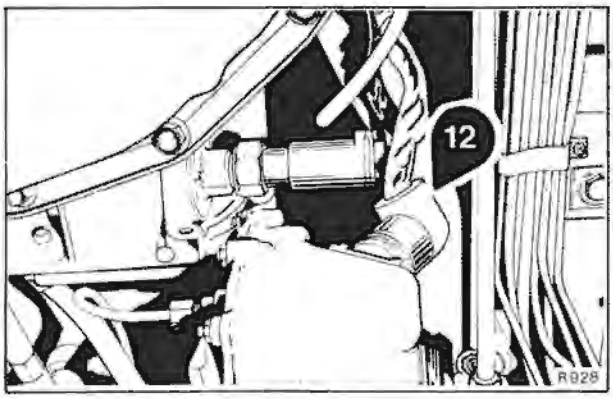

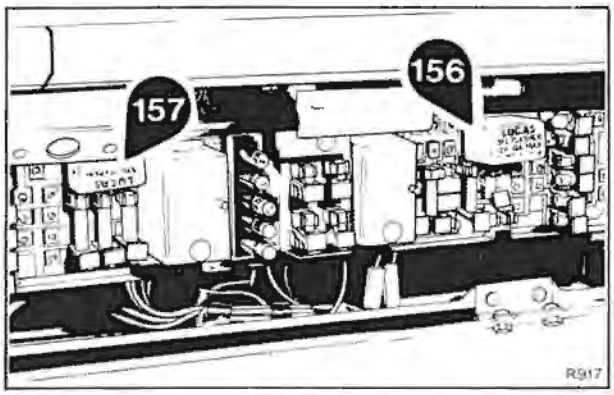

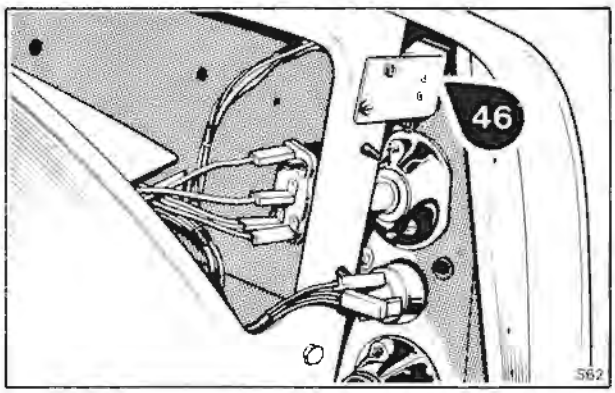

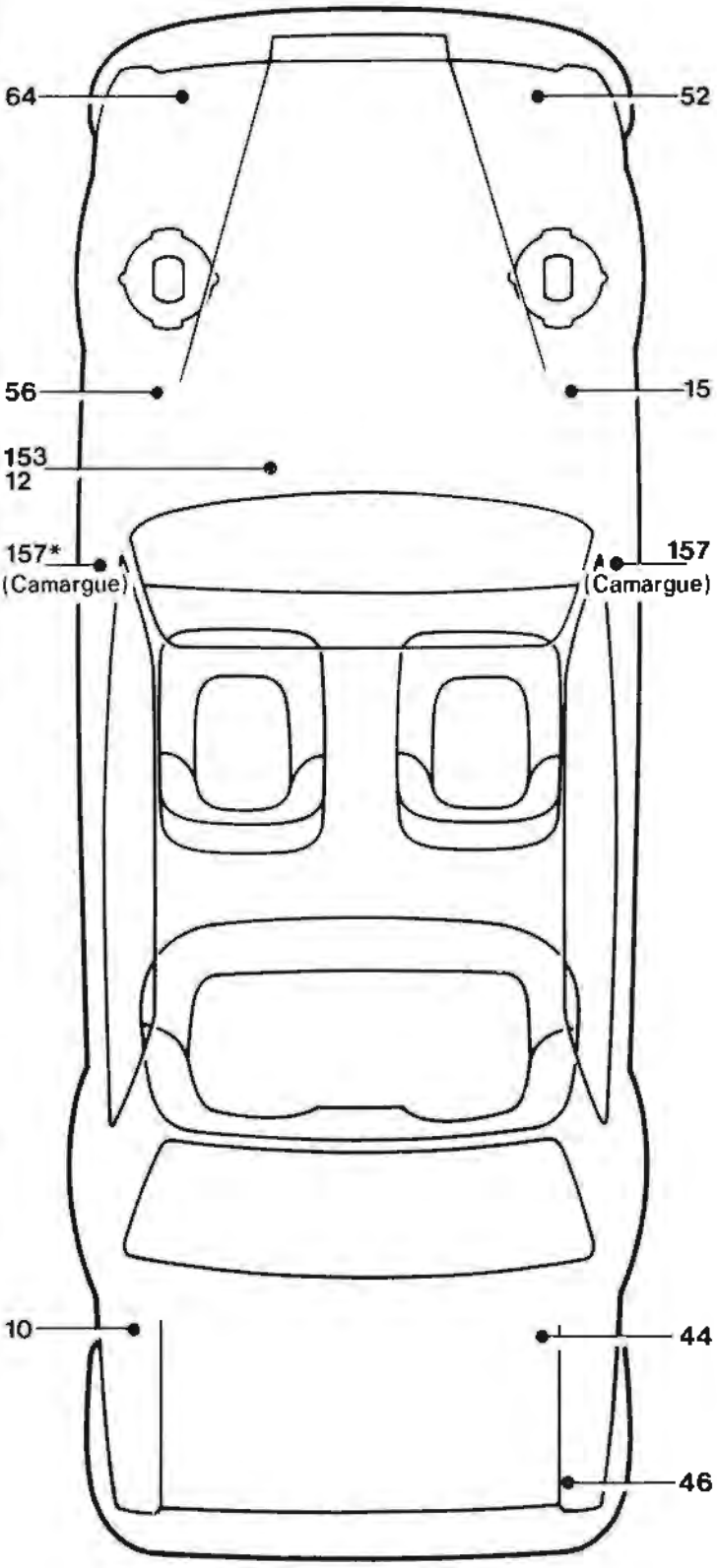

Components

5 Switchbox
10 Left-hand boot earth
12 Gearbox neutral start switch
15 Right-hand valance earth
17 Fuseboard
38 Stoplamp switch
44 Right-hand boot earth
46 Stoplamp failure relay
47 Left-hand stoplamp
48 Right-hand stoplamp
52 Right-hand front earth
56 Left-hand valance earth
62 Direction indicator switch
64 Left-hand front earth
77 Speedometer
152 Hazard warning switch
153 Reversing switch (gearchange actuator)
154 Left-hand direction indicator warning lamp
155 Right-hand direction indicator warning lamp
156 Hazard warning flasher unit
157 Direction indicator flasher unit
158 Left-hand front direction indicator
159 Left-hand front repeater
160 Left-hand rear direction indicator
161 Right-hand rear direction indicator
162 Right-hand front repeater
163 Right-hand front direction indicator
164 Left-hand reversing lamp
165 Right-hand reversing lamp

T Toeboard
HW Hazard warning socket
DI Direction indicator socket
WD Window demist socket
B Body sockets

***** All left-hand drive

Exterior lighting

Schematic wiring diagram

Hazard, direction, stop
and reversing lamps

Fig. M76

Printed in England
© Rolls-Royce Motors Limited 1977

T.S.D. 4200 May 1977

© Rolls-Royce Motors Limited 1977

Printed in England

S 405

T.S.D. 4200 May 1977

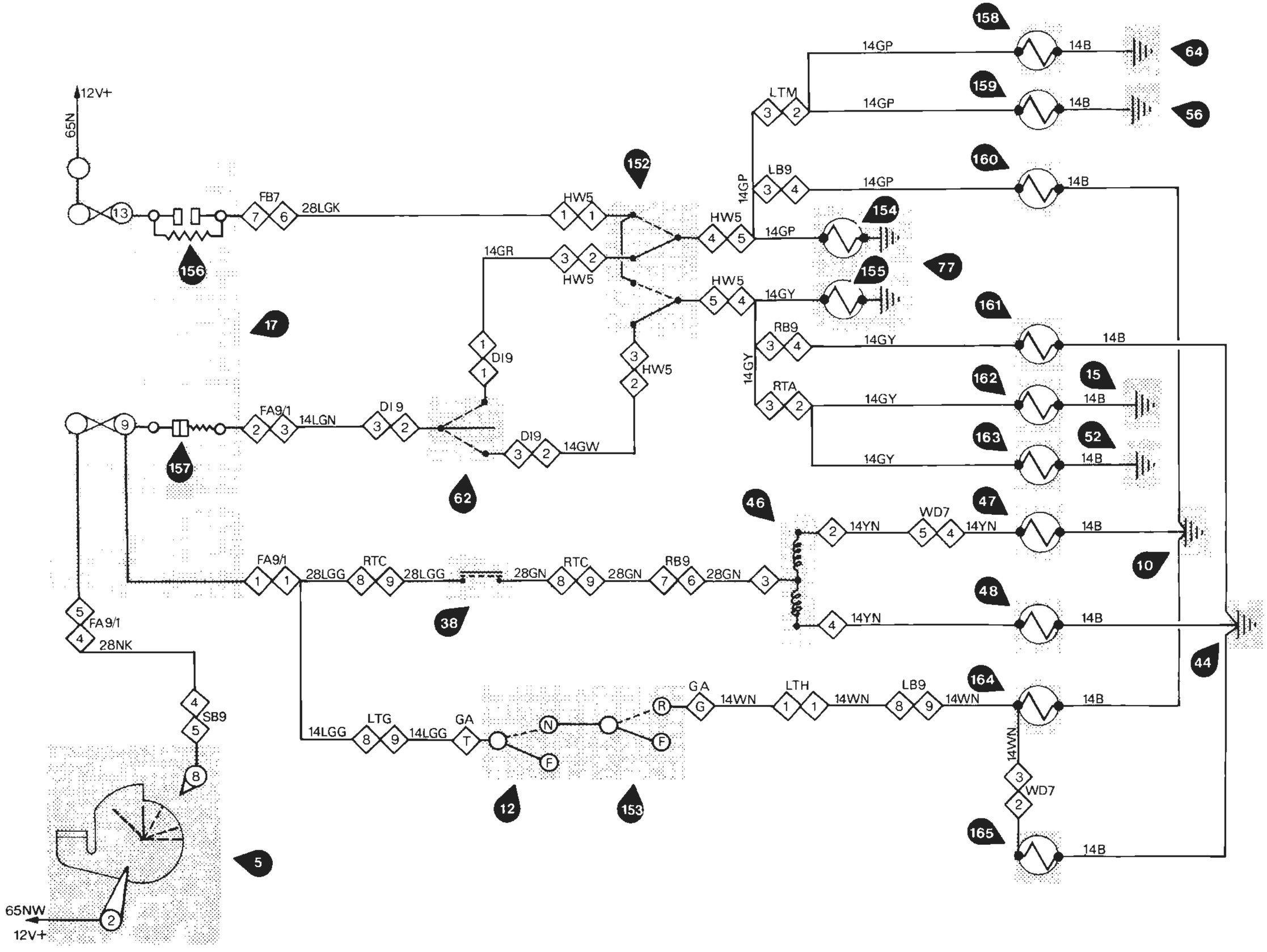

Exterior lighting

Component location and schematic wiring diagram

Foglamps

Fig. M77

Printed in England
© Rolls-Royce Motors Limited 1977
TSD 4200 May 1977

© Rolls-Royce Motors Limited 1977

Printed in England

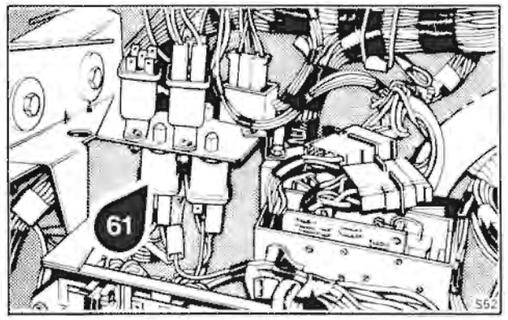

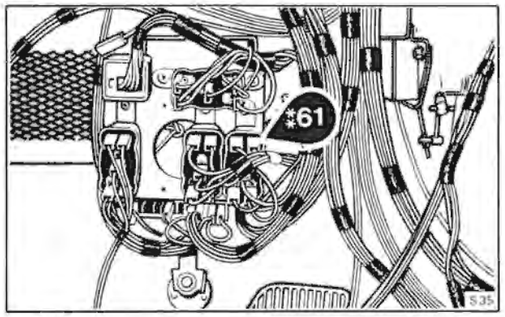

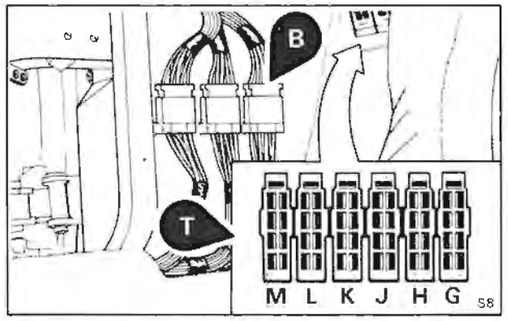

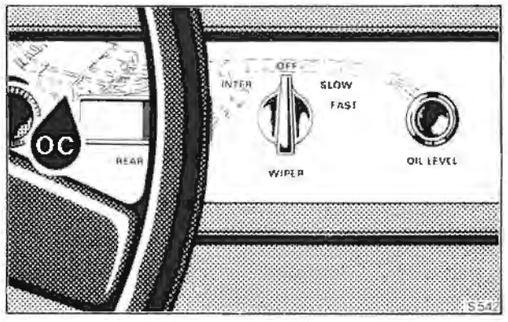

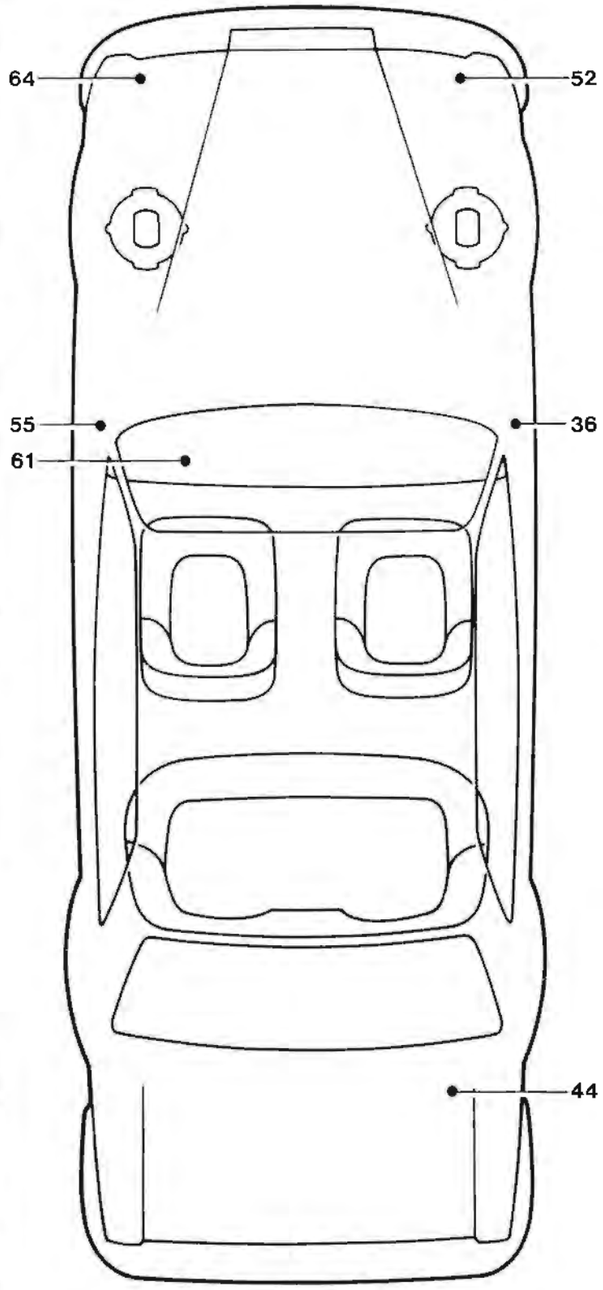

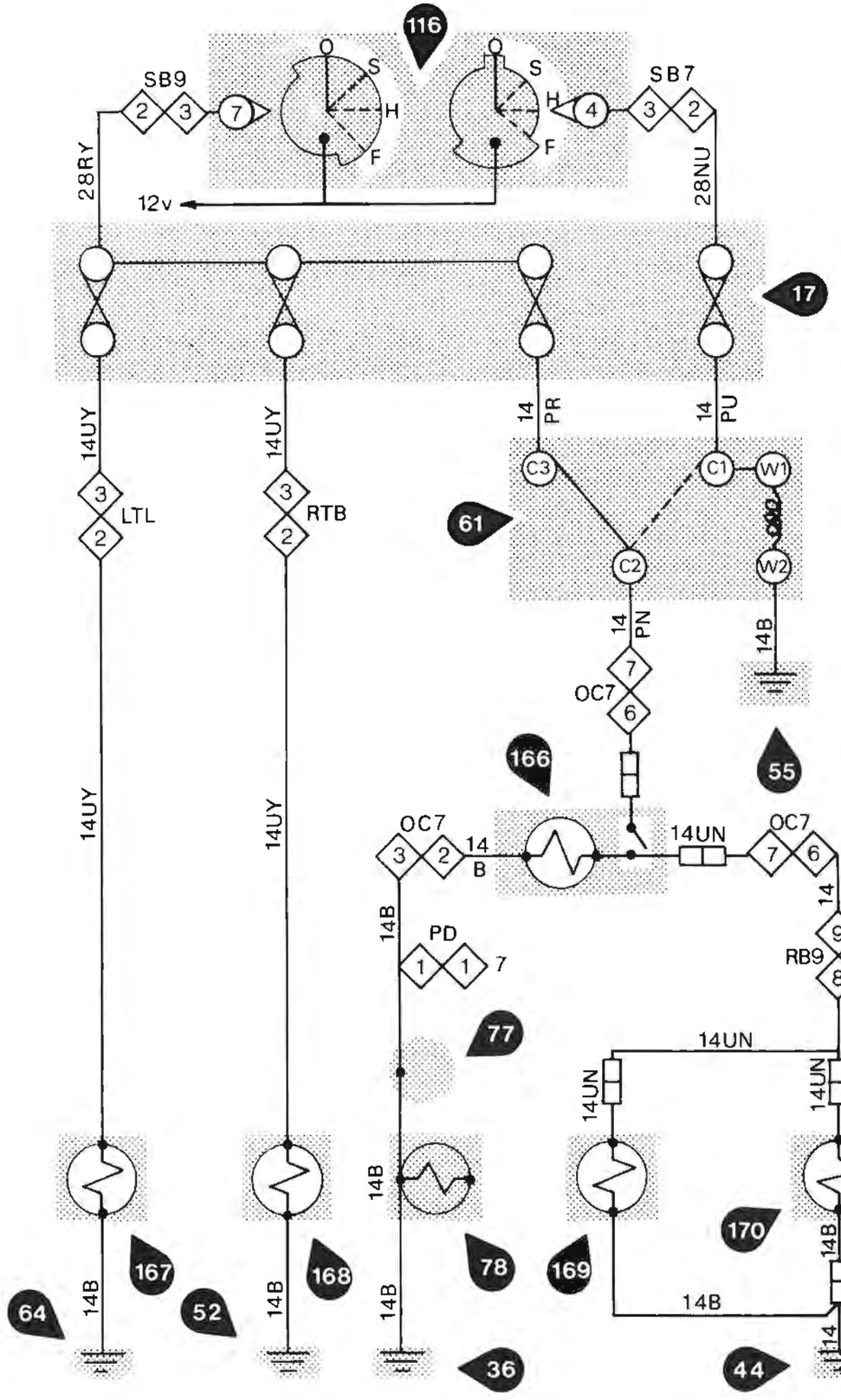

Components

17 Fuseboard
36 Right-hand 'A' post earth
44 Right-hand boot earth
52 Right-hand front earth
55 Left-hand 'A' post earth
61 Rear foglamp relay
64 Left-hand front earth
77 Speedometer
78 Main beam warning lamp
116 Main lighting switch
166 Rear foglamp switch and warning lamp
167 Left-hand front foglamp
168 Right-hand front foglamp
169 Left-hand rear foglamp
170 Right-hand rear foglamp

OC Oil check switch socket
PD Panel dim socket
T Toeboard sockets
B Body sockets

‡ Left-hand drive not North America

T.S.D. 4200 May 1977

Section M8

Supplement number 1 Exterior lighting Contents

Schematic wiring diagrams

Headlamps and foglamps

	Page
Right-hand drive cars	M8 - 3
Left-hand drive cars for countries other than Canada and U.S.A.	M8 - 5
Left-hand drive cars for Canada and U.S.A.	M8 - 7

From car serial numbers

Silver Shadow II	-	SRX 34573
Silver Wraith II	-	LRG 34601
Bentley T2	-	SBH 34775
Corniche Saloon	-	CRH 34830
Corniche Convertible	-	DRX 33029

Printed in England

© Rolls-Royce Motors Limited 1979

July 1979

TSD 4200

Section M8

Supplement number 1
Exterior lighting

Schematic wiring diagram
Headlamps and foglamps
Applicable to right-hand drive cars

From car serial numbers

Silver Shadow II	-	SRX 34573
Silver Wraith II	-	LRG 34601
Bentley T2	-	SBH 34775
Corniche Saloon	-	CRH 34830
Corniche Convertible	-	DRX 33029

Fig. M1 Supp. 1

Printed in England

© Rolls-Royce Motors Limited 1979

T.S.D. 4200 July 1979

Connectors

RB9 Right-hand body socket
SB9 Switchbox socket
FA7 Fuseboard 'A' socket
LTL Left-hand toeboard socket 'L'
LTM Left-hand toeboard socket 'M'
LTJ Left-hand toeboard socket 'J'
RTB Right-hand toeboard socket 'B'
RTC Right-hand toeboard socket 'C'

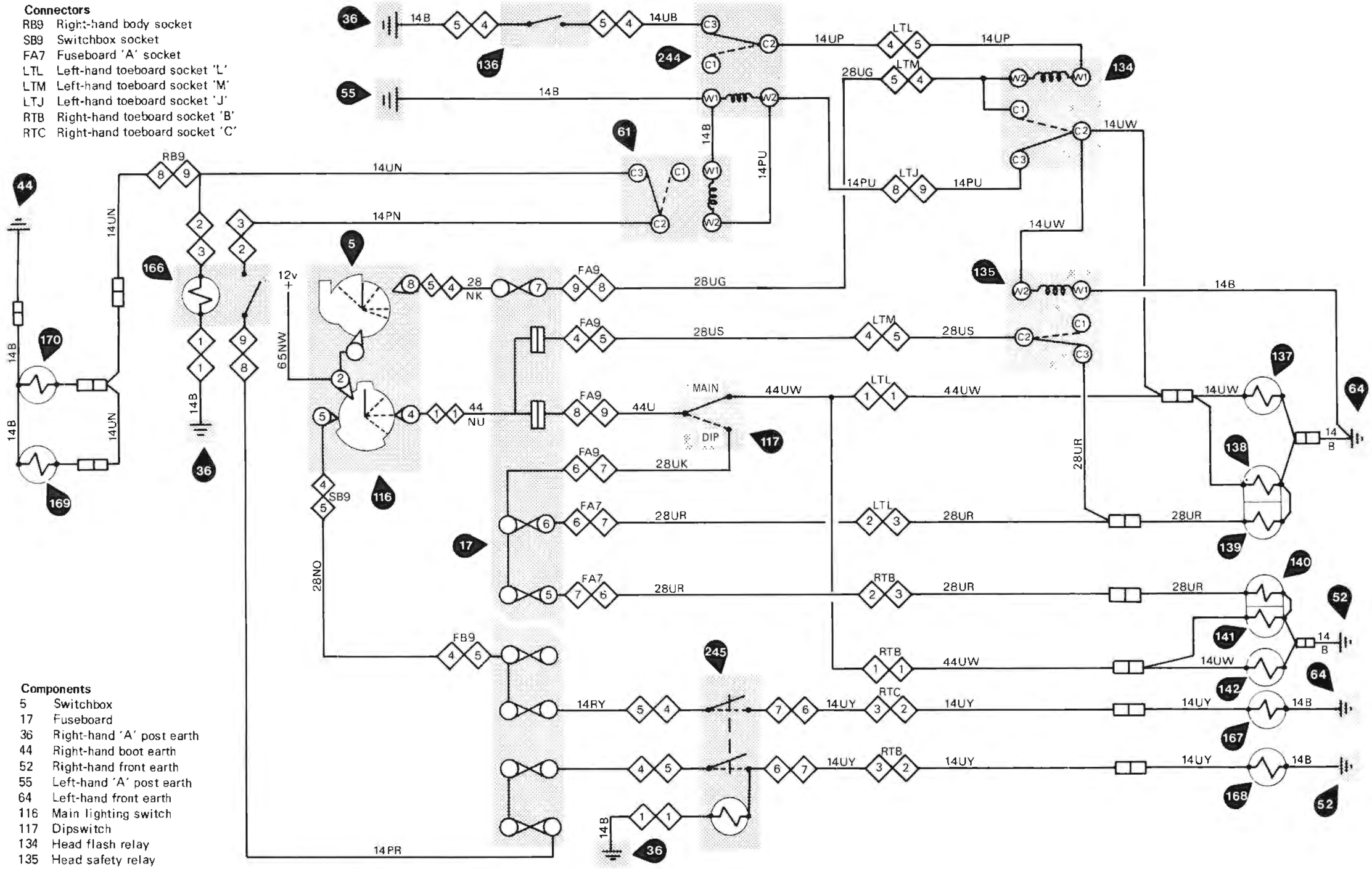

Components

5 Switchbox
17 Fuseboard
36 Right-hand 'A' post earth
44 Right-hand boot earth
52 Right-hand front earth
55 Left-hand 'A' post earth
64 Left-hand front earth
116 Main lighting switch
117 Dipswitch
134 Head flash relay
135 Head safety relay
136 Head flash switch
137 Left-hand main beam (long-range)
138 Left-hand main beam (flood)
139 Left-hand dipped beam
140 Right-hand dipped beam
141 Right-hand main beam (flood)
142 Right-hand main beam (long-range)
166 Rear foglamp switch and warning lamp
167 Left-hand front foglamp
168 Right-hand front foglamp
169 Left-hand rear foglamp
170 Right-hand rear foglamp
244 Fog flash inhibit relay
245 Front foglamp switch and warning lamp

© Rolls-Royce Motors Limited 1979

Printed in England

T.S.D. 4200 July 1979

Section M8

Supplement number 1
Exterior lighting

Schematic wiring diagram
Headlamps and Foglamps
Applicable to left-hand drive
cars for countries other than
Canada and U.S.A.
From car serial numbers

Silver Shadow II	-	SRX 34573
Silver Wraith II	-	LRG 34601
Bentley T2	-	SBH 34775
Corniche Saloon	-	CRH 34830
Corniche Convertible	-	DRX 33029

Fig. M2 Supp. 1

Printed in England

© Rolls-Royce Motors Limited 1979

T.S.D. 4200 July 1979

Connectors

RB9 Right-hand body socket
SB9 Switchbox socket
FA7 Fuseboard 'A' socket
LTL Left-hand toeboard socket 'L'
LTM Left-hand toeboard socket 'M'
LTJ Left-hand toeboard socket 'J'
RTB Right-hand toeboard socket 'B'
RTC Right-hand toeboard socket 'C'

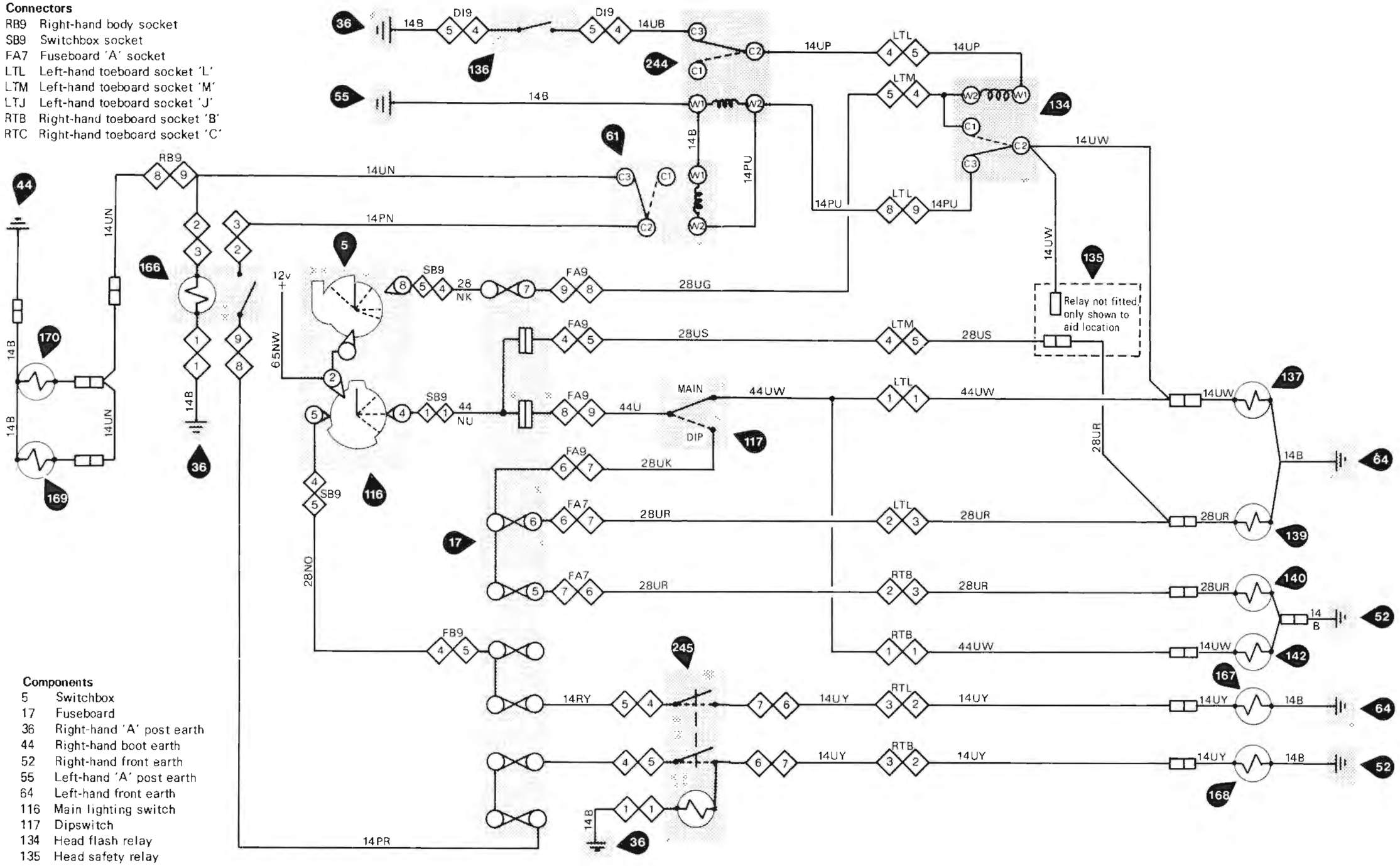

Components

5 Switchbox
17 Fuseboard
36 Right-hand 'A' post earth
44 Right-hand boot earth
52 Right-hand front earth
55 Left-hand 'A' post earth
64 Left-hand front earth
116 Main lighting switch
117 Dipswitch
134 Head flash relay
135 Head safety relay
136 Head flash switch
137 Left-hand main beam (long-range)
139 Left-hand dipped beam
140 Right-hand dipped beam
142 Right-hand main beam (long-range)
166 Rear foglamp switch and warning lamp
167 Left-hand front foglamp
168 Right-hand front foglamp
169 Left-hand rear foglamp
170 Right-hand rear foglamp
244 Fog flash inhibit relay
245 Front foglamp switch and warning lamp

© Rolls-Royce Motors Limited 1979

Printed in England

T.S.D. 4200 July 1979

Section M8

Supplement number 1
Exterior lighting

Schematic wiring diagram

Headlamps

Applicable to left-hand drive cars

for Canada and U.S.A.

From car serial numbers

Silver Shadow II	-	SRX 34573
Silver Wraith II	-	LRG 34601
Bentley T2	-	SBH 34775
Corniche Saloon	-	CRH 34830
Corniche Convertible	-	DRX 33029

Fig. M3 Supp. 1

Components

5 Switchbox
17 Fuseboard
52 Right-hand front earth
64 Left-hand front earth
116 Main lighting switch
117 Dipswitch
134 Head flash relay
135 Head safety relay
137 Left-hand main beam (long-range)
138 Left-hand main beam (flood)
139 Left-hand dipped beam
140 Right-hand dipped beam
141 Right-hand main beam (flood)
142 Right-hand main beam (long-range)

Connectors

SB9 Switchbox socket
FA7 Fuseboard 'A' socket
LTL Left-hand toeboard socket 'L'
LTM Left-hand toeboard socket 'M'
RTB Right-hand toeboard socket 'B'
RTC Right-hand toeboard socket 'C'

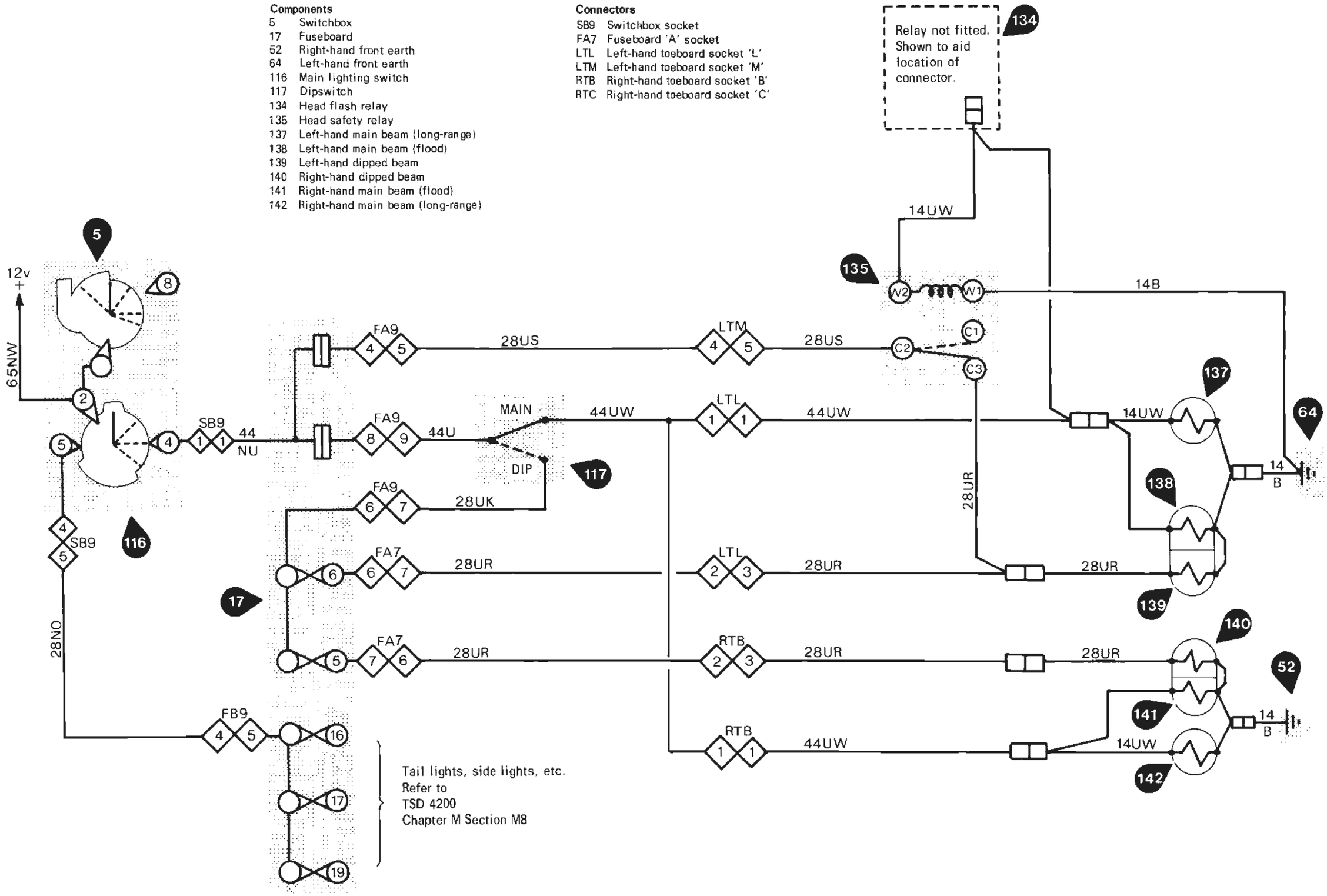

Tail lights, side lights, etc.
Refer to
TSD 4200
Chapter M Section M8

Printed in England
© Rolls-Royce Motors Limited 1979

Section M9

In-car entertainment Contents

Cars prior to car serial numbers

Silver Shadow II - SRX 34573
Silver Wraith II - LRG 34601
Bentley T2 - SBH 34775
Corniche Saloon - CRH 34830
Corniche Convertible - DRX 33029

	Page
Introduction	M9 - 3
Radio	M9 - 3
Cartridge player	M9 - 3
Radio aerial	M9 - 3
Fault diagnosis	M9 - 5
Component location (all cars except Silver Wraith II with division)	M9 - 9
Schematic wiring diagram (all cars except Silver Wraith II with division)	M9 - 11
Component location (Silver Wraith II with division)	M9 13
Schematic wiring diagram (Silver Wraith II with division)	M9 - 15

For cars from car serial numbers

Silver Shadow II - SRX 34573
Silver Wraith II - LRG 34601
Bentley T2 - SBH 34775
Corniche Saloon - CRH 34830
Corniche Convertible - DRX 33029

Refer to Section M9 Supplement number 1

Printed in England
© Rolls-Royce Motors Limited 1979

Section M9

In-car entertainment

Introduction
This section covers the stereo radio, four track cartridge player and aerial circuit. There is one wiring diagram for cars without division and one wiring diagram for Silver Wraith II with division.

Fuse number 20 feeds the complete system but, in addition, the front radio and cartridge player share a separate line fuse.

Radio
If a fault occurs and the radio is suspected it should be sent to an approved repairer.

Radio - To remove and fit
Silver Shadow II, Corniche, Bentley T2, Silver Wraith II (front radio)
1. Disconnect the battery.
2. Remove the console as described in Chapter S.
3. Remove the six self-tapping screws securing the mounting bracket and withdraw the bracket and radio.
4. Disconnect the aerial lead, speaker leads and power supply.
5. To fit a radio, reverse operations 1 to 4 ensuring that the radio is not obstructed by cables.
6. If a new radio has been fitted it may be necessary to adjust the aerial trimmer for best reception.

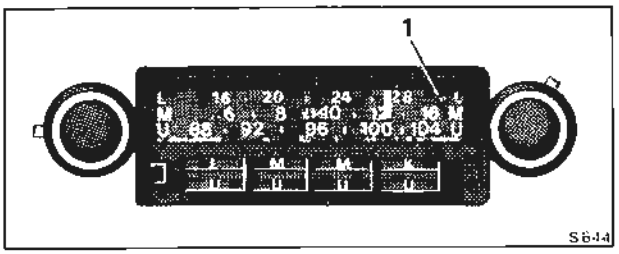

Fig. M78 Aerial trim screw location
1 Aerial trim screw

Camargue
1. Disconnect the battery.
2. Remove the facia as described in Chapter S.
3. Remove the screws securing the radio panel; withdraw the radio and disconnect the aerial, speaker leads and power supply.
4. Withdraw the knobs and unscrew the nuts from the spindle bushes.
5. To fit a radio, reverse operations 1 to 4 ensuring that the radio is not obstructed with cables.
6. If a new radio has been fitted it may be necessary to adjust the aerial trimmer for best reception.

Aerial - To trim (see Fig. M78)
1. Extend the aerial to its full extent then select a weak signal of about 1100 kHz.
2. Insert a small screwdriver into the trimmer hole and turn clockwise or anti-clockwise until the signal strength is at its maximum

Cartridge player
If a fault occurs on the cartridge player it should be sent to an approved repairer.

Radio aerial
On cars fitted with a centre division, the rear aerial is raised when the rear radio is switched on and is lowered when the radio is switched off.

The front aerial on all other cars is operated by the aerial switch fitted on the facia.

Front aerial - To remove
1. Disconnect the battery.
2. Remove the thermal cut-out and chock the rear wheels.
3. Support the car on blocks or a jack and remove the front road wheel.
4. Remove the caps and screws securing the rear undersheet to the front wing; remove the undersheet. The caps are fitted to the threaded end of the screws which protrude through the body into the engine compartment.
5. Unscrew and remove the chromium-plated bush fitted to the top of the wing taking care not to damage the chromium plating.
6. Remove the rubber mounting which fits beneath the surround.
7. Disconnect the aerial signal lead.
8. Disconnect the upper earth bonding strap.
9. Unscrew the screws securing the carpet covering the 'A' post connectors, peel back the carpet and disconnect the aerial motor cables at the Lucar connectors (light green/red and light green/blue cables).
10. Pull the aerial motor cables through the rubber grommet.
11. Slacken the lower mounting nut securing the aerial assembly to the mounting bracket, slide the assembly free and detach the lower earth bonding strap.
12. Remove the aerial from beneath the wing together with the mounting rubbers and distance collar.

Printed in England
© Rolls-Royce Motors Limited 1977
July 1977
T.S.D. 4200

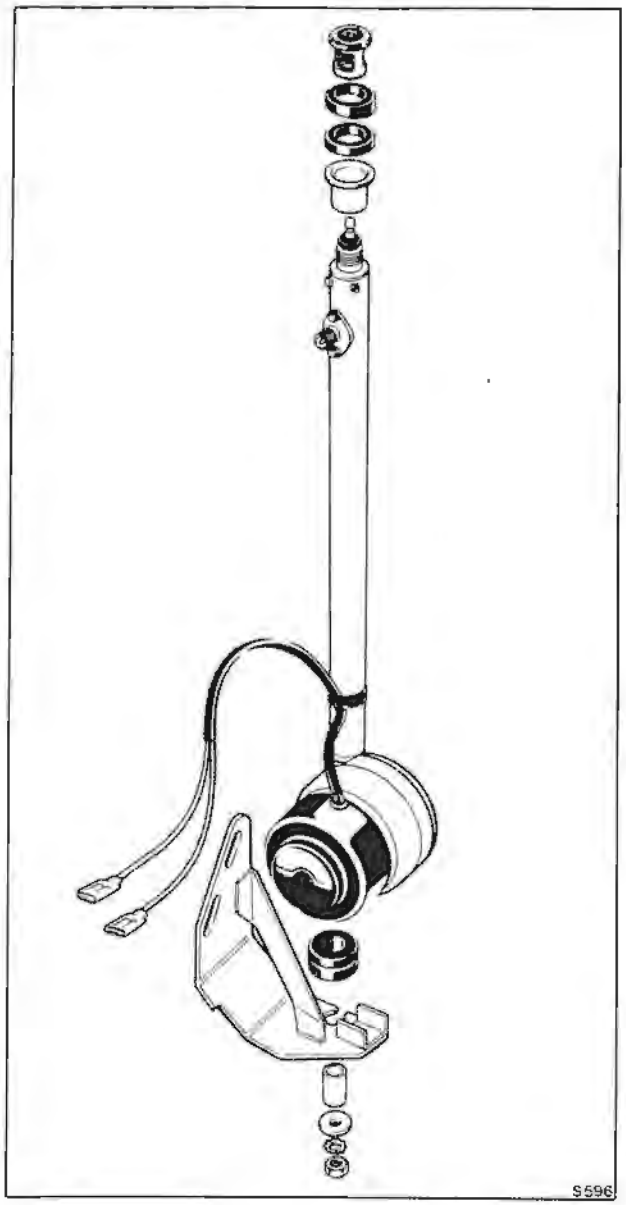

Fig. M79 Front aerial

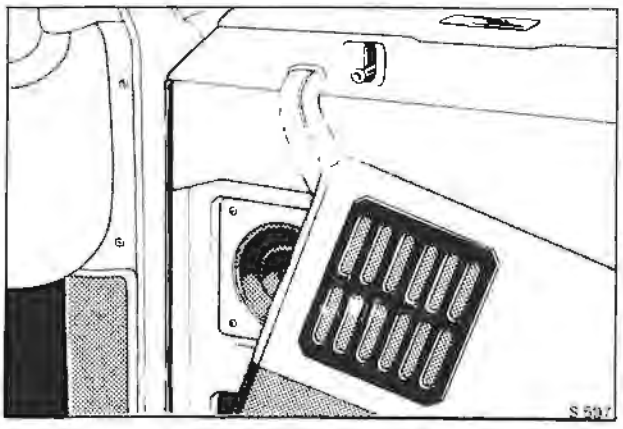

Fig. M80 Front speaker (Camargue)

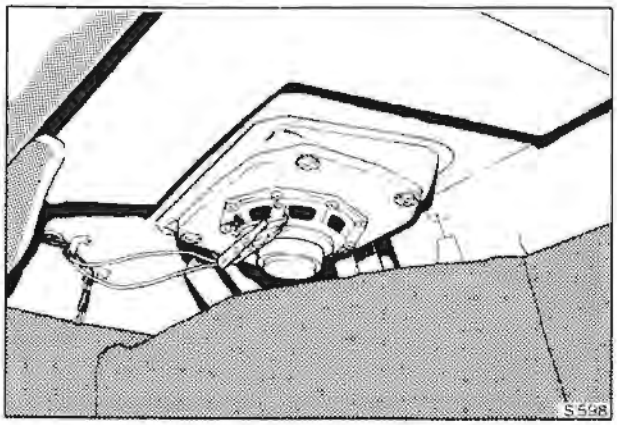

Fig. M81 Rear speaker (Camargue)

Aerial - To fit

Reverse the procedure given for removal, noting the following points:

1. Ensure that the distance collar abutts the underwing surface in the same relative position before removal.
2. Ensure that both aerial bonding straps are securely tightened.

Rear aerial and relay

The rear aerial and relay are fitted behind the right-hand side trim in the luggage compartment. The aerial is raised and lowered automatically as the rear radio is switched on and off.

Relay - To test

1. Remove the side trim to gain access to the relay.
2. Remove the black/green cable from W1. Insulate the cable.
3. Switch on the ignition.
4. Using a test lamp between earth and the green/brown cable at C2, verify that C2 is 'live' and verify also that the white cable at C1 is 'live'.
5. Connect the test lamp between C3 (red cable) and earth, the lamp should remain extinguished.
6. Connect C2 to W1 (energising the coil), the test lamp attached to C3 should now be lit. The aerial should also be extended.
7. Remove the shorting link from C2 and W1, the test lamp should be extinguished and the aerial lowered.
8. Switch off the ignition and reconnect the black/green cable to W1.

Section M9

In-car entertainment Fault diagnosis

Malfunction	Possible cause	Action
Complete system failure (including aerial)	Fuse 'blown'	Switch off the radio and tape player and replace fuse 20. If the fuse 'blows' again, a short circuit is present and should be traced by isolating the aerial circuit.
	No live feed to fuse 20.	Test for live feed on the brown/light green cable at fuseboard B and switchbox.
Radio and tape player inoperative, aerial satisfactory.	Radio line fuse 'blown' or faulty fuseholder	Check fuse and fuseholder.
	Poor connection.	Check the green/slate cable at the line fuse, tape/radio loom socket and radio/tape changeover relay board. Check the green/brown cable at line fuse and fuseboard 'B'. Check the slate/black cable at tape loom socket and ensure that the socket is secure.
Tape player inoperative, radio satisfactory.	Radio/tape change-over relay faulty	Replace relay.
	Poor connections	Check green/slate cable at changeover relay, choke and tape player socket.
	Tape player faulty	Replace tape player
Front radio faulty, tape player and rear radio (when fitted)satisfactory	Radio faulty	Replace radio
	Poor connection	Check the red and slate/black cables at radio and changeover relay board.
	Aerial	Check aerial connections at radio and aerial mast.
Rear radio faulty, tape player and front radio satisfactory.	Radio faulty	Replace radio
	Poor connections	Check the red cable from changeover relay to rear radio.
	Poor earth	Check black cable at division switch, tape track change switch, rear balance control and division earth point.
	Aerial	Verify that aerial is connected. (A short length of cable connected to the aerial socket will serve as a substitute).
Front and rear radios faulty, tape player satisfactory.	Changeover relay board	Replace relay board. Check red cable at relay

Printed in England

© Rolls-Royce Motors Limited 1979

Loudspeaker fault diagnosis when cartridge player is fitted.

Malfunction	Possible cause	Action
Left-hand front speaker not working on radio or cartridge player.	Speaker	Substitute speaker
	Poor connection	Check slate and slate/green cables at speaker and left-hand door socket. Check slate/brown cable at tape loom socket and changeover relay.
Left-hand front speaker not working on radio Cartridge player satisfactory.	Poor connection	Check slate/red cable from balance control to changeover relay board
	Faulty contact in change-over relay board	Substitute board.
Left-hand front speaker not working on cartridge player. Radio satisfactory	Cartridge player faulty	Replace player
	Poor connection	Check green cable between cartridge player socket and changeover relay board.
	Changeover relay board faulty	Substitute board.
Left-hand rear speaker not working on radio or cartridge player	Speaker	Replace speaker
	Poor connection	Check co-axial cable from speaker to LB9 to TL7. Check slate/yellow cable from TL7 to changeover relay board.
	Changeover relay board faulty	Substitute board
Left-hand rear speaker not working on radio, cartridge player satisfactory.	Poor connection	Check slate/green cable from balance control to changeover relay board
	Faulty contact in change-over relay board	Substitute board
Left-hand rear speaker not working on cartridge player. Radio satisfactory	Cartridge player faulty	Replace player
	Poor connection	Check green/red cable from player socket to change-over relay board
	Changeover relay board faulty	Substitute board
Right-hand front speaker not working on radio or cartridge player	Speaker	Replace speaker
	Poor connection	Check slate and slate/black cables from speaker to RD7. Check slate/purple cable from TL7 to changeover relay board.

Malfunction	Possible cause	Action
	Changeover relay board faulty	Substitute relay board.
Right-hand front speaker not working on radio, Cartridge player satisfactory.	Poor connection	Check slate/blue cable from balance control to changeover board.
	Faulty contact in changeover relay board.	Substitute board.
Right-hand front speaker not working on cartridge player. Radio satisfactory	Cartridge player faulty	Replace cartridge player
	Poor connection	Check slate cable from player to changeover board.
	Changeover relay board feulty.	Substitute board.
Right-hand rear speaker not working on radio or cartridge player.	Speaker	Replace speaker
	Poor connection	Check co-axial cable from speaker to RB9 to TL7. Check slate/white cable from TL7 to changeover relay board.
	Changeover relay board faulty.	Substitute relay board.
Right-hand rear speaker not working on radio. Cartridge player satisfactory.	Poor connection	Check slate/green cable from balance control to changeover relay
	Faulty contact in changeover relay board.	Substitute board.
Right-hand rear speaker not working on cartridge player. Radio satisfactory.	Cartridge player faulty	Replace player.
	Poor connection	Check red/slate cable from player socket to changeover relay board.
	Changeover relay board faulty.	Substitute board.

Loudspeaker fault diagnosis when cassette player is fitted

Malfunction	Possible cause	Action
Left-hand speakers not working on cassette player or radio.	Poor connection	Check the connections of the pink cable between the changeover board and balance control. Also check the connector joining the pink and slate/pink cable at the balance control.
Right-hand speakers not working on cassette player or radio.	Poor connection	Check the connections of the orange cable between the changeover board and balance control. Also check the connector joining the orange and slate/orange cable at the balance control.

Printed in England
© Rolls-Royce Motors Limited 1979

One speaker does not work on cassette player or radio.	Speaker faulty	Replace speaker
	Poor connector.	Check the cables at the appropriate door or body socket and also the cable and connectors between the balance control and tape loom socket.

In-car entertainment

Component location
(all cars except Silver Wraith II with division)
Fig. M82

Printed in England
© Rolls-Royce Motors Limited 1977
July 1977
T.S.D. 4200

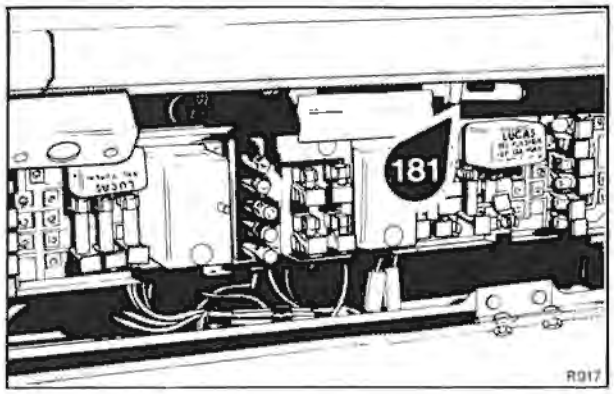

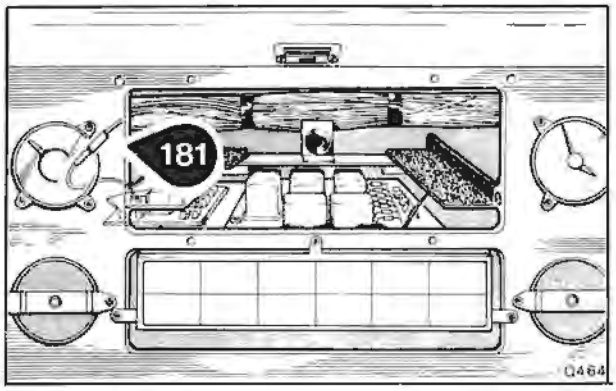

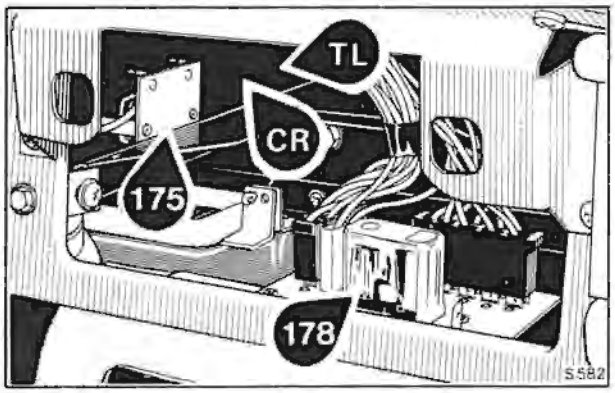

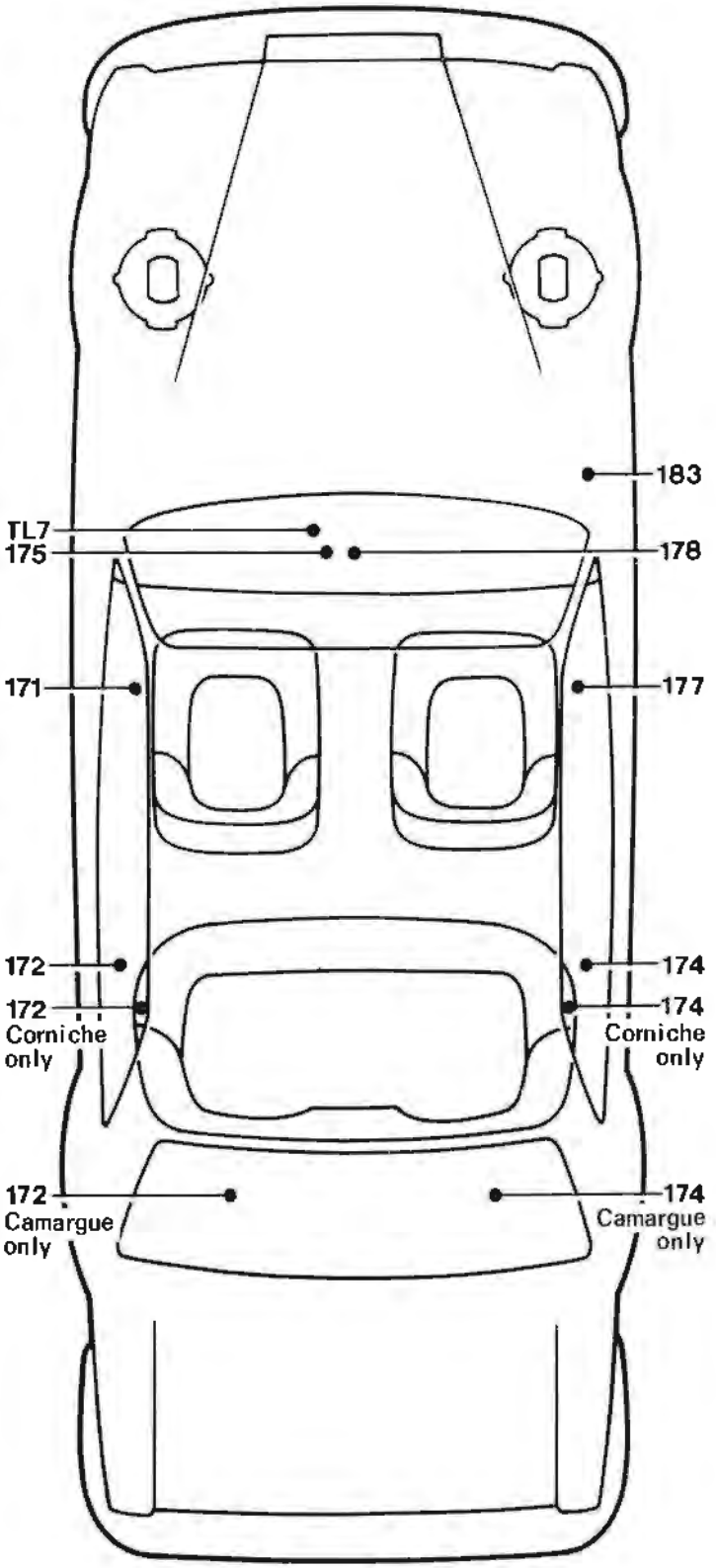

Components

5	Ignition switch
17	Fuseboard
171	Left-hand front speaker
172	Left-hand rear speaker
173	Right-hand front speaker
174	Right-hand rear speaker
175	Tape player choke
176	Tape player socket
177	Tape player
178	Radio/tape changeover relay
179	Front balance controls
180	Front radio
181	Radio line fuse
182	Front aerial switch
183	Front aerial
CR	Changeover relay socket
TL	Tape loom socket

S 417

In-car entertainment

Schematic wiring diagram
(all cars except Silver Wraith II with division
Fig. M83

Printed in England

© Rolls-Royce Motors Limited 1977

T.S.D. 4200 July 1977

© Rolls-Royce Motors Limited 1977
Printed in England

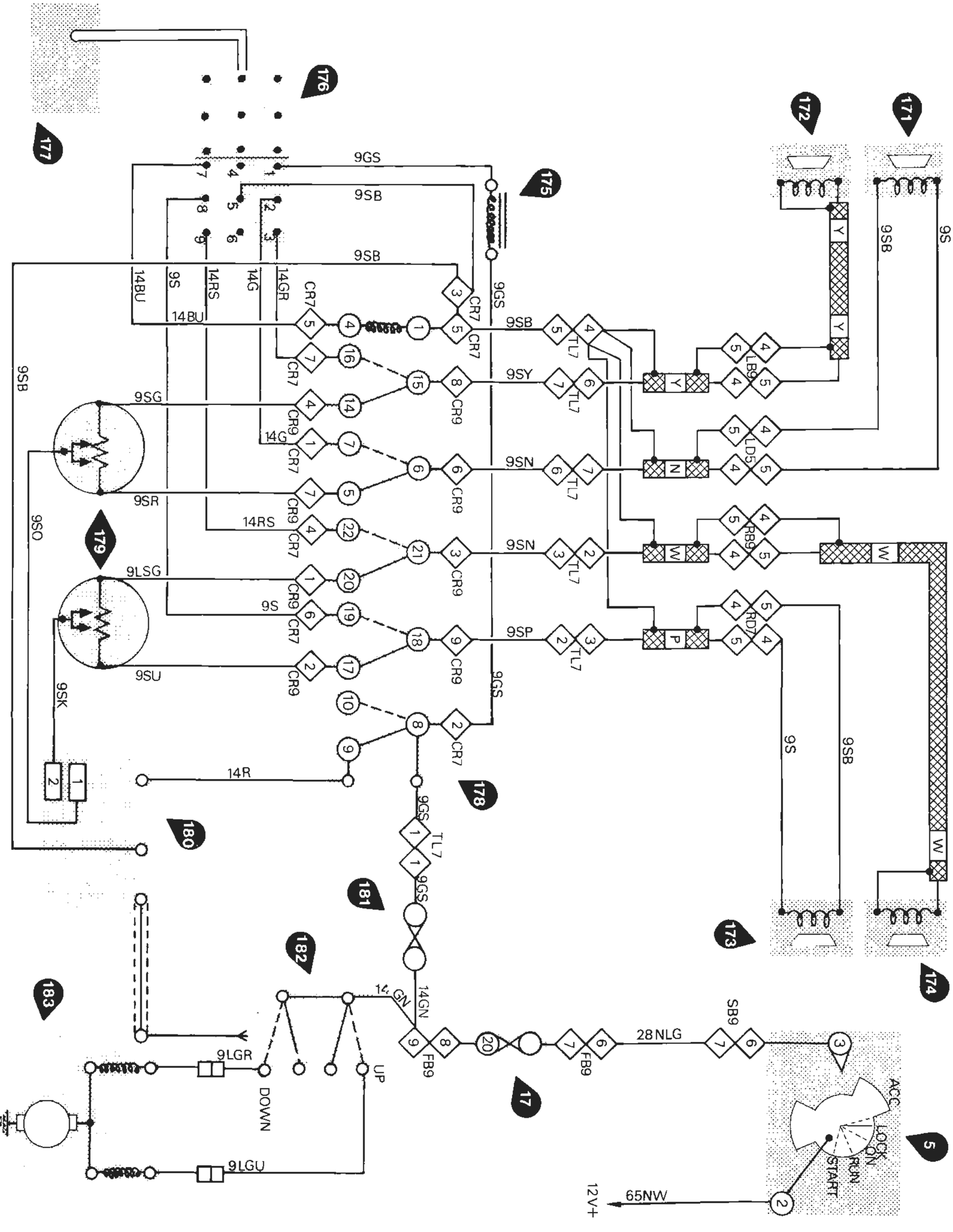

In-car entertainment

Component location
(Silver Wraith II with division)
Fig. M84

Printed in England
© Rolls-Royce Motors Limited 1977
July 1977
T.S.D. 4200

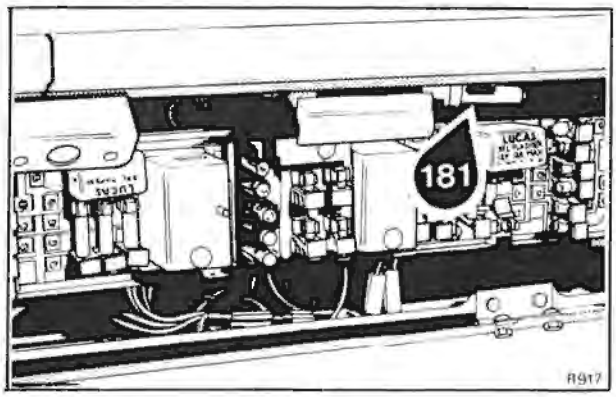

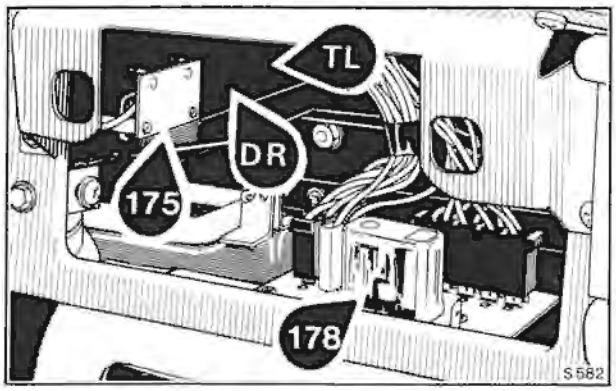

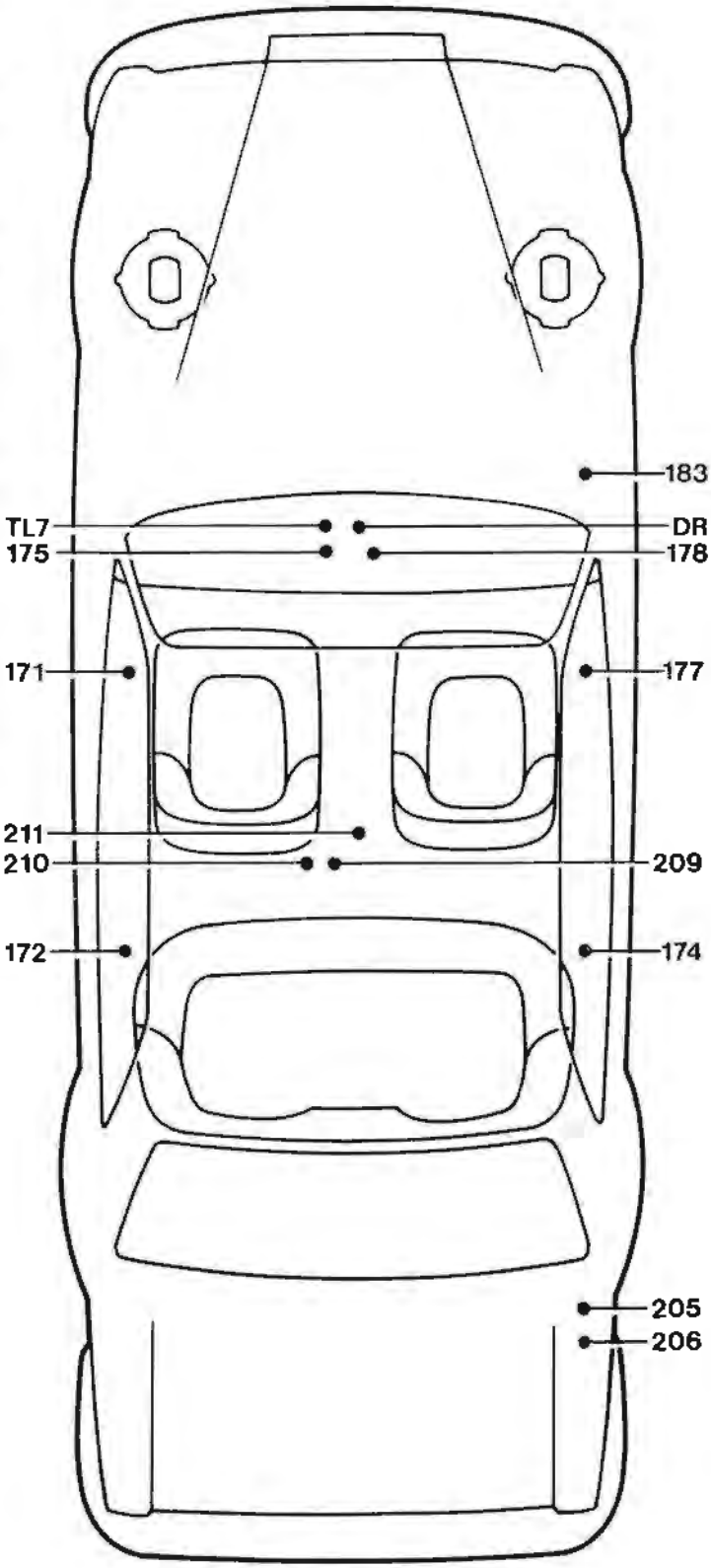

Components

5 Ignition switch
17 Fuseboard
44 Right-hand boot earth
171 Left-hand front speaker
172 Left-hand rear speaker
173 Right-hand front speaker
174 Right-hand rear speaker
175 Tape player choke
176 Tape player socket
177 Tape player
178 Radio/tape changeover relay
181 Radio line fuse
182 Front aerial switch
183 Front aerial
205 Rear aerial motor
206 Rear aerial relay
207 Rear radio
208 Division switch
209 Track change switch
210 Rear balance controls
211 Division earth

TL Tape loom socket
DR Division radio socket

In-car entertainment

Schematic wiring diagram
(Silver Wraith II with division)
Fig. M85

Printed in England
© Rolls-Royce Motors Limited 1977
T.S.D. 4200 July 1977

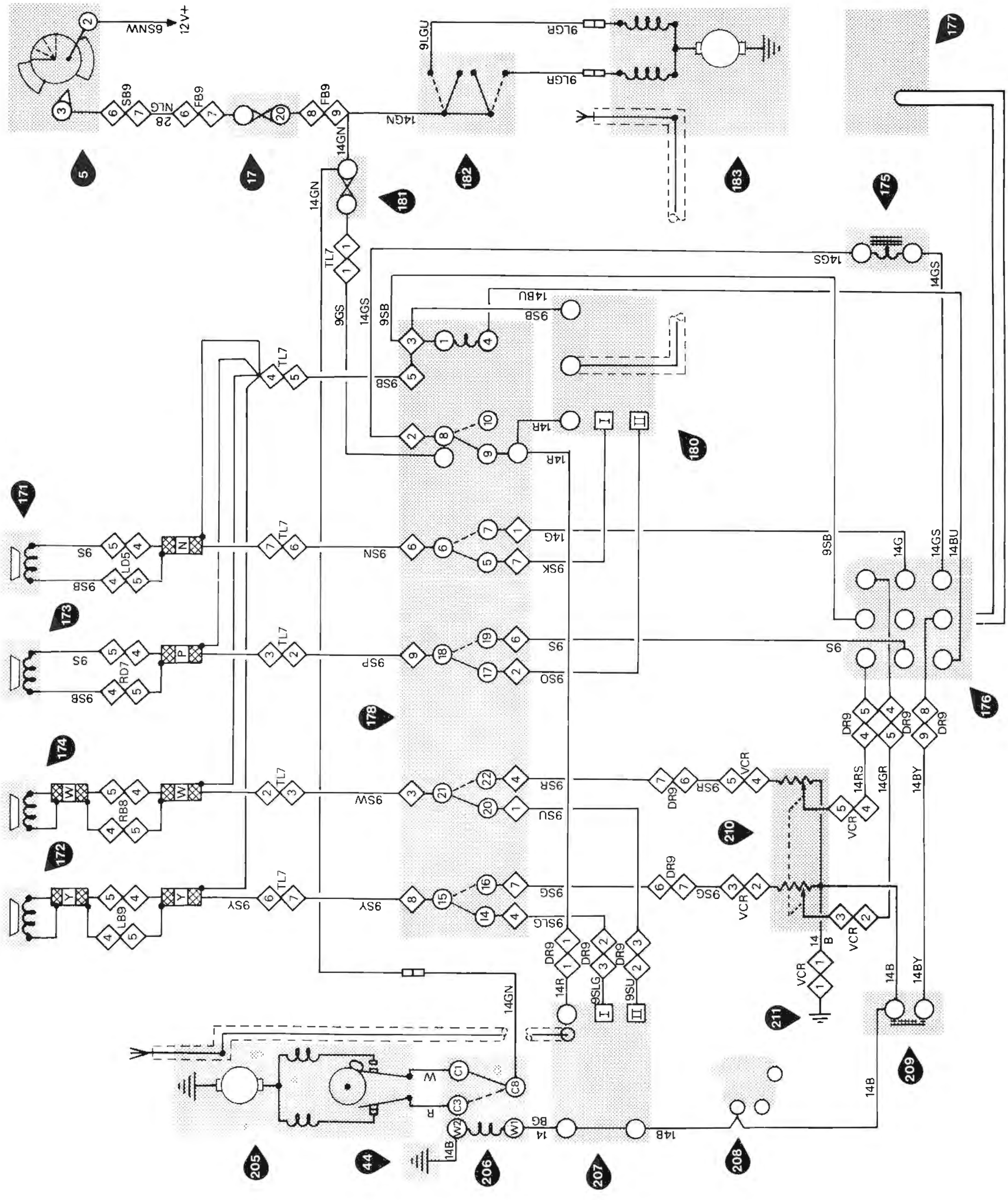

© Rolls-Royce Motors Limited 1977

Printed in England

Section M9

Supplement number 1
In-car entertainment
Contents

	Page
Cars fitted with a cartridge player	M9 - 3
Cars fitted with a cassette player	M9 - 5
Automatic aerial fault diagnosis	M9 - 7

From car serial numbers

Silver Shadow II	- SRX 34573
Silver Wraith II	- LRG 34601
Bentley T2	- SBH 34775
Corniche Saloon	- CRH 34830
Corniche Convertible	- DRX 33029

Printed in England

© Rolls-Royce Motors Limited 1979

July 1979

TSD 4200

Section M9

Supplement number 1
In-car entertainment

Schematic wiring diagram
Applicable to cars fitted
with a cartridge player
From car serial numbers

Silver Shadow II	-	SRX 24573
Silver Wraith II	-	LRG 34601
Bentley T2	-	SBH 34775
Corniche Saloon	-	CRH 34830
Corniche Convertible	-	DRX 33029

Fig. M1 Supp. 1

Printed in England

© Rolls-Royce Motors Limited 1979

© Rolls-Royce Motors Limited 1979

Printed in England

U316

TSD 4200 July 1979

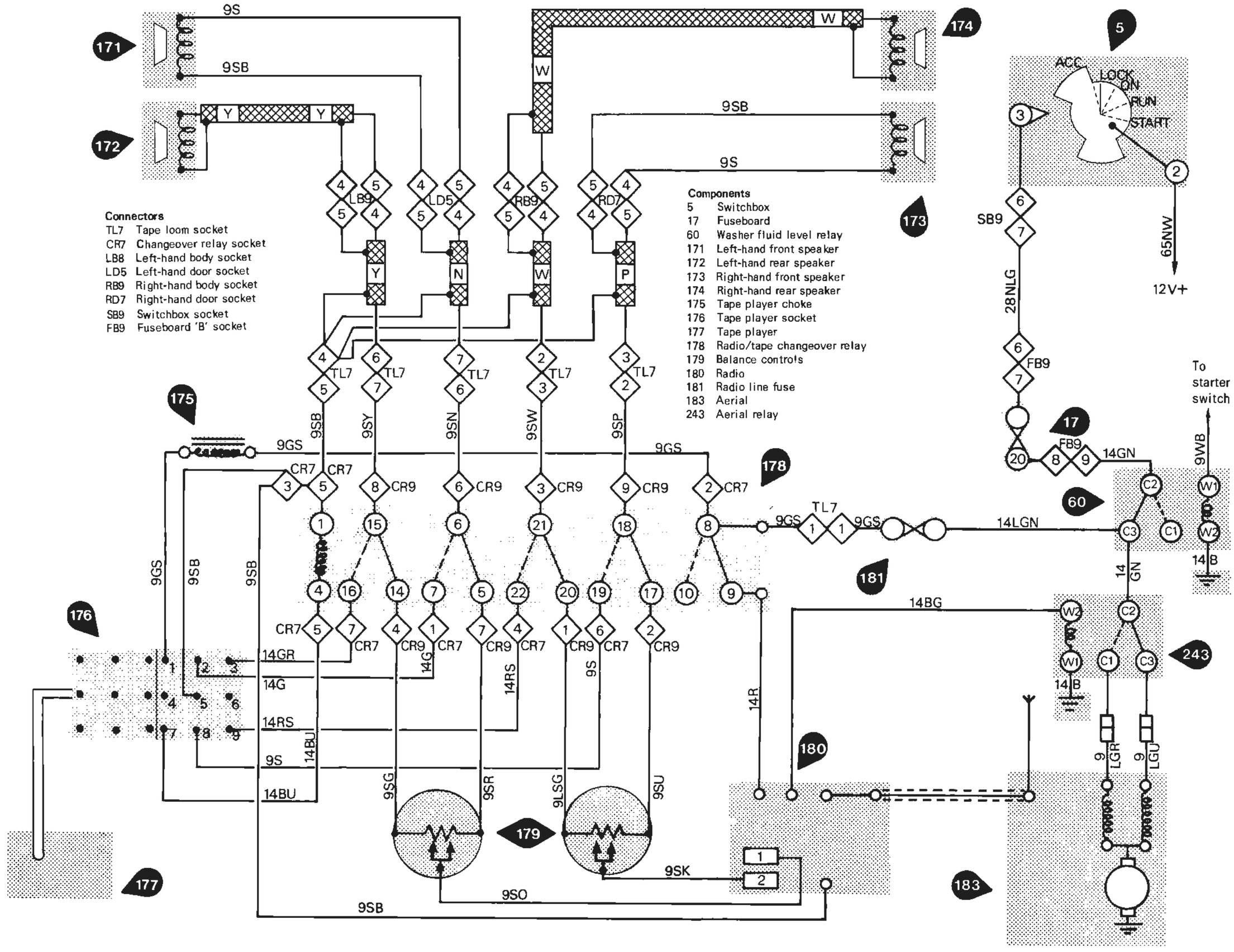

Section M9

Supplement number 1
In-car entertainment

Schematic wiring diagram
Applicable to cars fitted
with a cassette player
From car serial numbers

Silver Shadow II	-	SRX 34573
Silver Wraith II	-	LRG 34601
Bentley T2	-	SBH 34775
Corniche Saloon	-	CRH 34830
Comiche Convertible	-	DRX 33029

Fig. M2 Supp. 1

Printed in England

© Rolls-Royce Motors Limited 1979

TSD 4200 July 1979

Printed in England

© Rolls-Royce Motors Limited 1979

Connectors

TL7 Tape loom socket
CR7 Changeover relay socket
LB8 Left-hand body socket
LD5 Left-hand door socket
RB9 Right-hand body socket
RD7 Right-hand door socket
SB9 Switchbox socket
FB9 Fuseboard 'B' socket

Components

5 Switchbox
17 Fuseboard
60 Washer fluid level relay
171 Left-hand front speaker
172 Left-hand rear speaker
173 Right-hand front speaker
174 Right-hand rear speaker
175 Tape player choke
176 Tape player socket
178 Radio/tape changeover relay
179 Balance controls
180 Radio
181 Radio line fuse
183 Aerial
243 Aerial relay

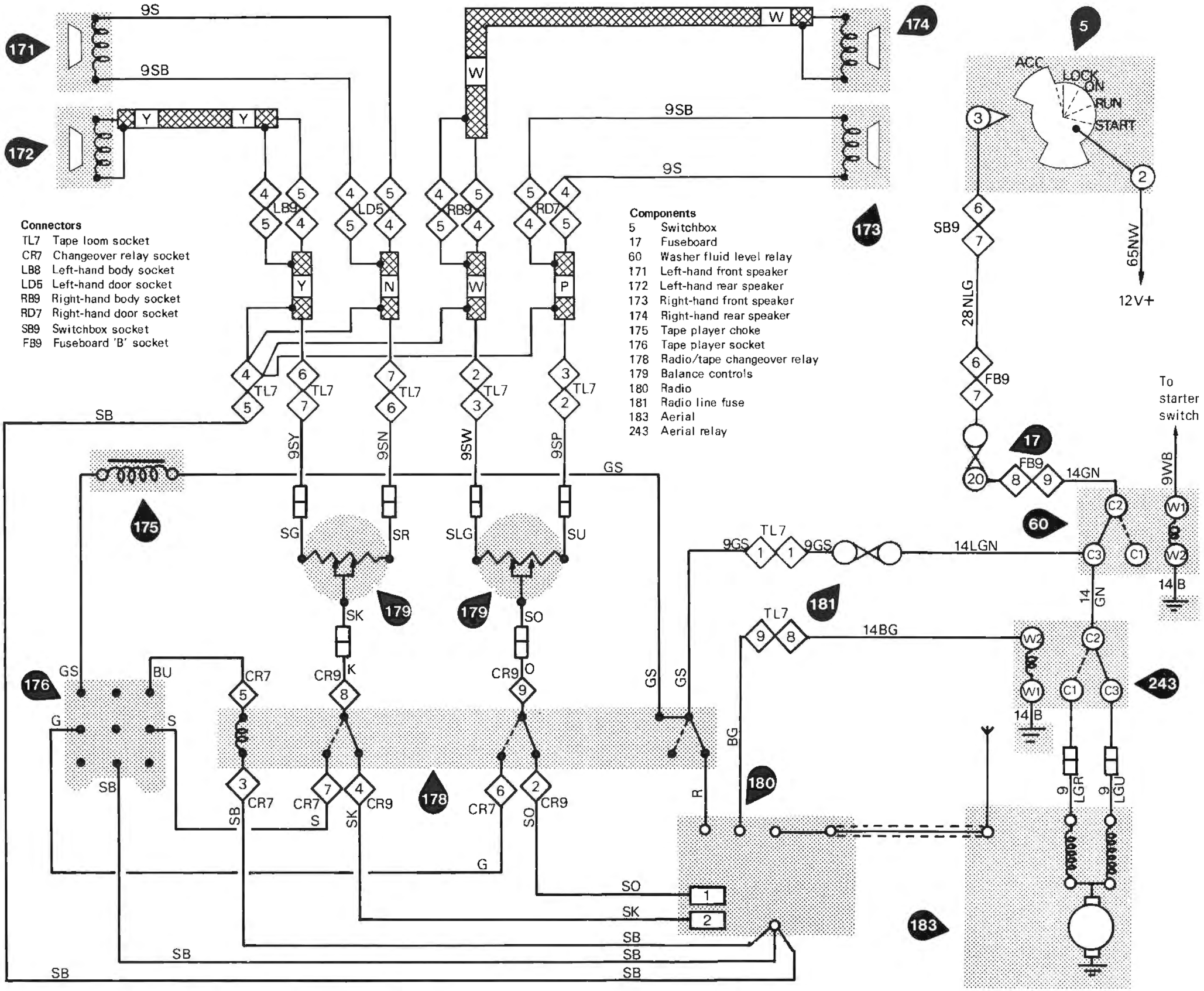

Section M9

Supplement number 1
Automatic aerial
Fault diagnosis

Component location

From car serial numbers

Silver Shadow II	-	SRX 34573
Silver Wraith II	-	LRG 34601
Bentley T2	-	SBH 34775
Corniche Saloon	-	CRH 34830
Corniche Convertible	-	DRX 33029

Fig. M3 Supp. 1

Printed in England

© Rolls-Royce Motors Limited 1979

July 1979

ISD 4201

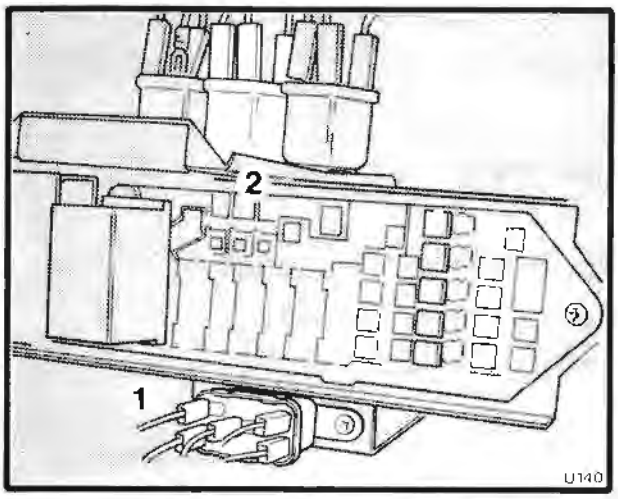

Aerial relay and washer fluid level relay left-hand drive cars

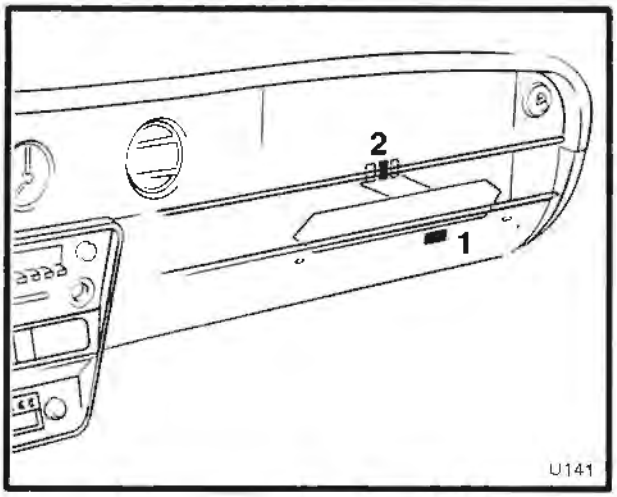

Location left-hand drive cars

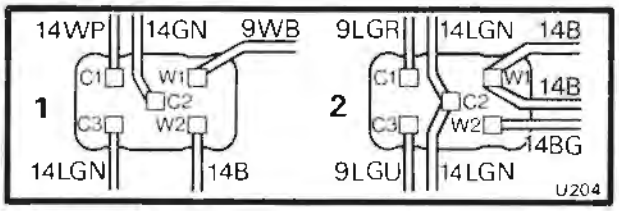

1. Washer fluid level relay
2. Aerial relay

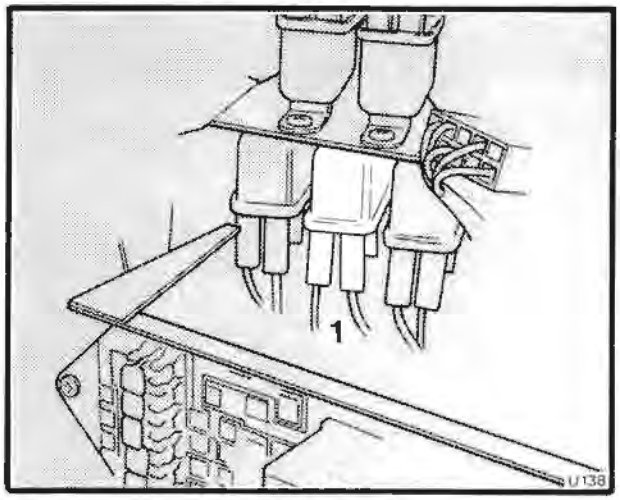

Washer fluid level relay right-hand drive cars

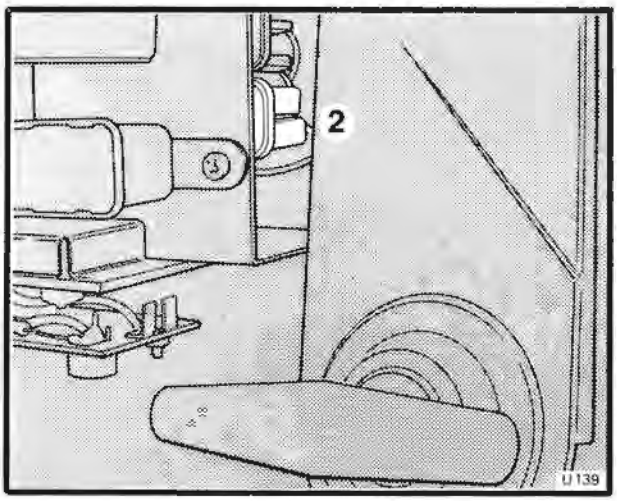

Aerial relay right-hand drive cars

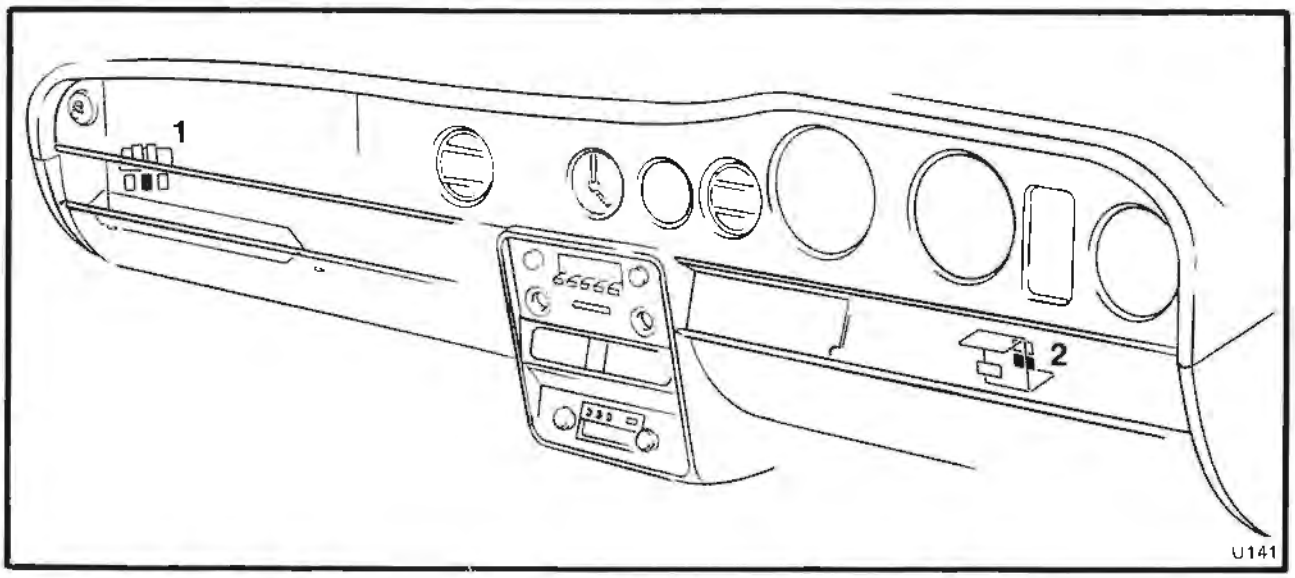

Location right-hand drive cars

Section M9

Supplement number 1
Automatic aerial
Fault diagnosis

From car serial numbers

Silver Shadow II	-	SRX 34573
Silver Wraith II	-	LRG 34601
Bentley T2	-	SBH 34775
Corniche Saloon	-	CRH 34830
Corniche Convertible	-	DRX 33029

Fig. M4 Supp. 1

Printed in England

© Rolls-Royce Motors Limited 1979

TSD 4200 July 1979

© Rolls-Royce Motors Limited 1979

Printed in England

TSD 4200 July 1979

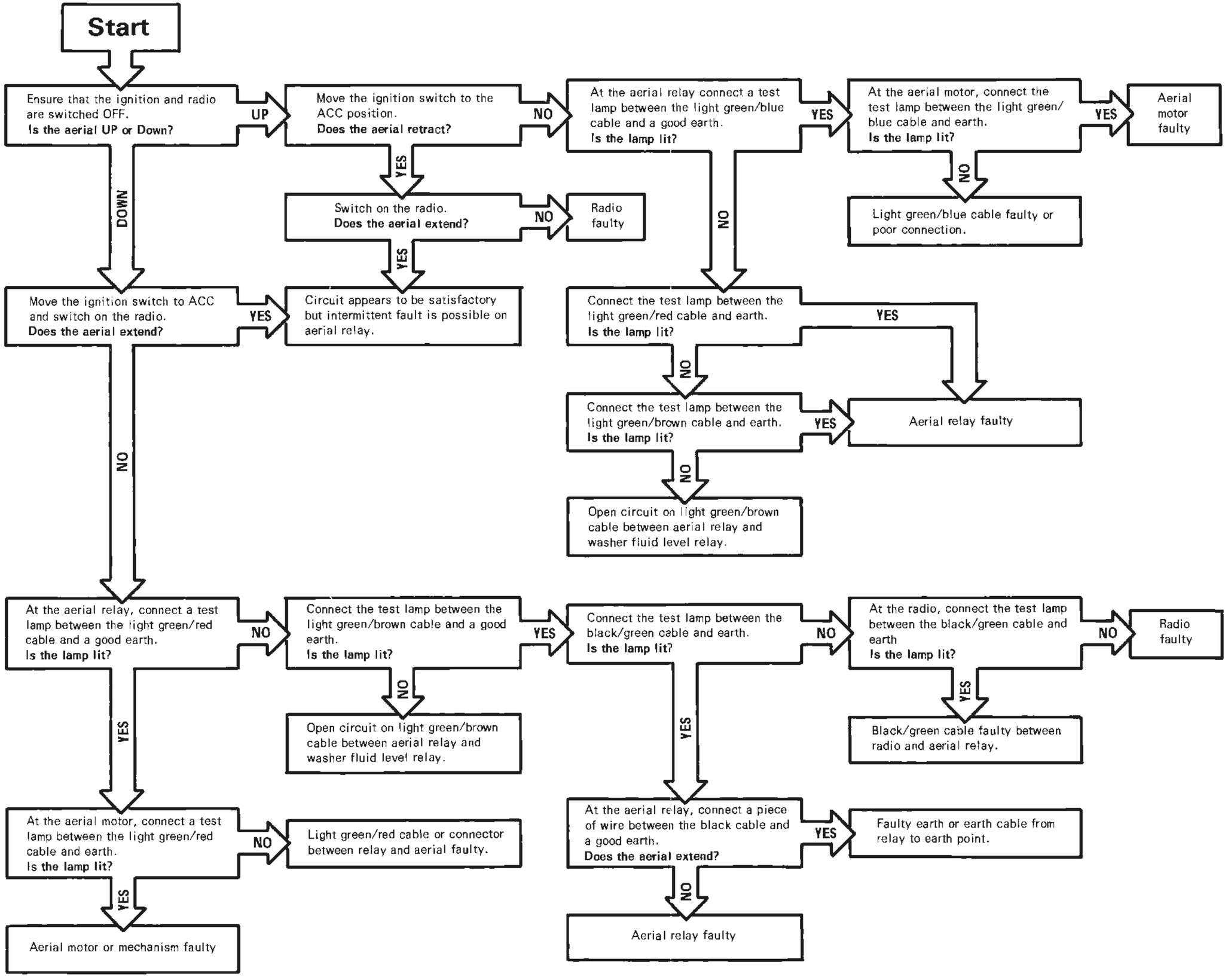

Section M10

Electrically operated front seats

	Page
Description	M10 - 3
Electrically operated seat mechanism	M10 - 3
Fault diagnosis	M10 - 5
Component location	M10 - 7
Wiring diagram sheet 1	M10 - 9
Wiring diagram sheet 2	M10 - 11

Printed in England

© Rolls-Royce Motors Limited 1979

December 1979

T.S.D. 4200

Section M10

Electrically operated front seats

Description

An electric motor drives a worm shaft via a worm and wheel gear. Roll pins are fitted to the worm shaft to divide the shaft into three lengths. Three solenoid operated clutches are also fitted onto the shaft, one for each length.

The rear clutch provides the fore and aft movement of the seat mechanism, the centre clutch provides up and down movement at the rear of the seat and the front clutch provides up and down movement at the front of the seat.

Fuses 10 and 11 protect the electric motors (one for each seat) and fuse 21 protects the seat switch and solenoid operated clutches.

Note

Fuse 21 also protects the windscreen wiper circuit therefore if the fuse 'blows', the wiper circuit should be isolated to determine which circuit is faulty.

Electrically operated seat mechanism

To remove and dismantle (see Fig. M86)

1. Remove the seat from the car as described in Chapter S.
2. Remove the setscrews securing the clutches to the seat actuating levers.
3. Remove the screw securing the motor to the motor support strut.
4. Remove the split pin and washer retaining the motor gear housing to the pivot; withdraw the assembly from the pivot.
5. Unscrew and remove the setscrews securing the motor to the gear housing then separate the two units.
6. Remove the first 4 roll pins from the actuating screw (counting from the front of the seat).
7. Rotate each clutch nut anti-clockwise (viewed from the front of the seats) and remove the three clutch assemblies from the actuating screw. Note the position of each clutch assembly on the actuating screw to ensure correct assembly.
8. Remove the setscrews securing the cover plate to the gear housing.
9. Withdraw the actuating screw together with the bearing and gear assembly.
10. Using a punch, tap out the pin securing the worm gear to the actuating screw.
11. Using either a press or 'claw' type extractor, remove the gear and bearing from the shaft.
12. Remove the spacer, thrush washer and small worm shaft from the gear housing.

Seat mechanism - To inspect

1. Examine the links and link pins for wear and fracture; worn pins will cause the mechanism to rattle.
2. Peel back the rubber covering surrounding the motor and examine the general condition of the brush gear and commutator. If these components are in poor condition or if their serviceable life is limited, a service exchange motor should be fitted.

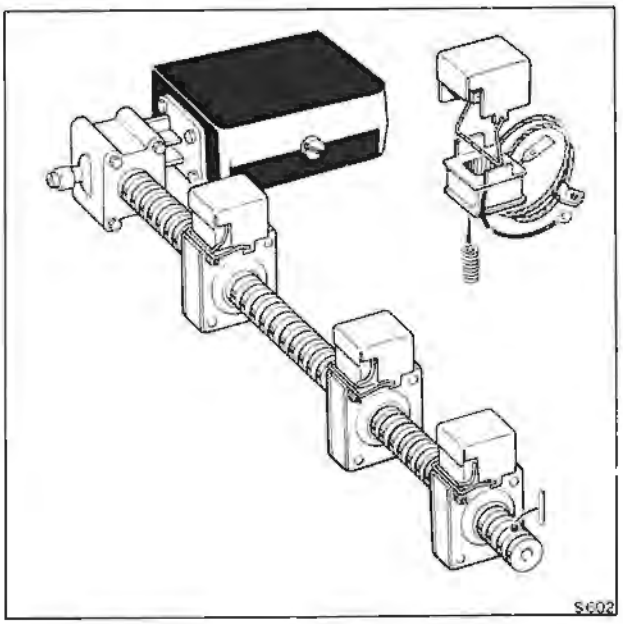

Fig. M86 Seat mechanism

3. If the general condition of the motor is satisfactory, the commutator and brushgear should be cleaned with a petrol-soaked cloth and any particles of carbon dust remaining should be blown away with dry compressed air; ensure that the spent air is directed away from the working parts of the motor.
4. If the surface of the commutator is lightly scored or blackened by embedded carbon, the brushes should be lifted away from the commutator and the commutator cleaned with a piece of fine glasspaper. **Do not use emery cloth or similar abrasive.**
5. Apply light pressure to the glass paper and rotate the armature until the surface of the commutator is thoroughly clean and free from score marks. Remove particles of dust and dirt using dry compressed air, ensure that the spent air is directed away from the working parts of the motor.
6. Verify that the carbon brushes are free in the holders.

Printed in England
© Rolls-Royce Motors Limited 1977

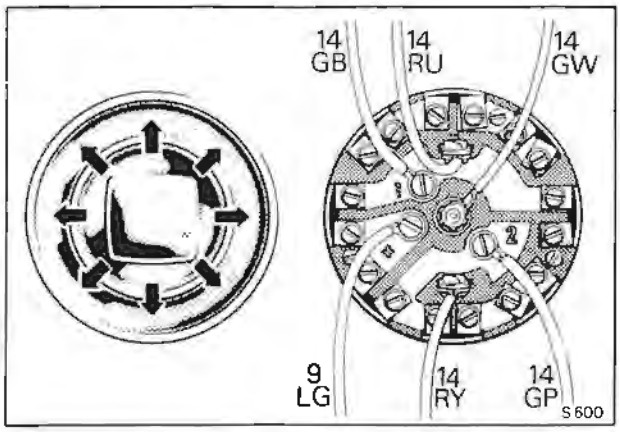

Fig. M87 Seat switch terminals

7. Fit the rubber covering.
8. Thoroughly wash the bearing in clean petrol or white spirit (not paraffin), then examine the bearing for signs of pitting, corrosion or cracking of the balls or tracks.
9. Examine the bearing bushes for signs of excessive wear and replace if necessary. Before removing worn bushes, note their position relative to their respective housing face to ensure correct assembly of the new bushes.
10. Examine the worm and wheel for worn or damaged teeth.

Seat mechanism - To assemble and fit
Reverse the procedure given for removal and dismantling, noting the following points:
1. The worm and wheel gear should have a backlash of between 0,08 mm. and 0,18 mm. (0.003 in. and 0.007 in.).
2. With the exception of the actuating screw all non-electrical working parts should be lubricated with 'Rocol' MT265 grease, the actuating screw should be lubricated with 'Moly tone' anti-scuffing paste.

Extreme care must be taken not to disturb the thermal cut-out, (bi metal blade, slightly concave, approximately 12 x 18 mm. (½ in. x ¾ in.) with a contact at the centre). **Do not** attempt to operate this switch by hand, any cold mechanical operation will alter the current/thermal switching characteristics.

Section M10

Electrically operated front seats
Fault diagnosis

Malfunction	Possible cause	Action
Both seat mechanisms inoperative (Fuse 21 blown)	Short circuit on 9 LG cable	Check fuse. If fuse has 'blown' disconnect the two main distribution loom plugs then replace fuse. If the fuse blows again the fault is in the Windscreen Wiper circuit. (Refer to Section M6). If the fuse remains intact disconnect the 9 LG cables at both seat switches then connect the two main distribution loom plugs observing the fuse after each connection. If the fuse 'blows', the seat loom is faulty. Check for loose connections at relays and seat switches.
	Short circuit on cables to seat motor clutches or relay windings	Disconnect the seat motor connections and check for short to earth on the 14 RU and 14 RY cables of seat switch and also the 14 GP, 14 GB and 14 GW cables.
One or more seat movement positions on seat switch inoperative	Faulty switch	Verify that voltage is available on the 9 LG cable (+) at seat switch. Refer to table 1 and test for voltage at the appropriate cable when operating the seat switch. If the necessary voltage is not present the switch is faulty.
	Faulty relay wiring or faulty relay	Check relay connections are secure. Refer to table 1 and test for voltage on the 14 RY and 14 RU cables at relay when operating the seat switch. Test for live feed at relay C2 when operating the relay.
	Faulty clutch	At clutch, check connections. Refer to table 1 and test for voltage at each clutch. If incorrect examine plug connections. Test for open circuit in clutch winding.
	Faulty seat motor	Refer to table 1 and test for voltage on the 28 Y and 28 UG cables at the seat motor connections. If voltage is available, the motor or motor cable is faulty. Verify that the 28 B cable to earth is secure or connect a temporary cable from the 28 B cable to a good earth.
	Short circuit to earth on 28 NR cable	Verify that fuse has blown then test each section of cable for short to earth including the squab locking switch and solenoid.

Printed in England
© Rolls-Royce Motors Limited 1977
July 1977
T.S.D. 4200

Malfunction	Possible cause	Action
Seat mechanism sluggish	Motor mechanism obstructed	Inspect the mechanism and lubricate the screw shaft with 'Molytone' anti-scuffing paste.
	Motor torque low	Replace seat mechanism.
Squab locking inoperative	Short circuit to earth on 28 NR cable (Fuse 10 or 11 blown)	Test each section of cable including seat mechanism.
	Faulty connection to solenoid or switch	Examine connections and rectify if necessary.
	Faulty earth cable from solenoid	Connect a temporary cable between the solenoid and a good earth. Recheck system and fit a new earth cable if necessary.
Squab locking solenoid permanently energised	Faulty switch	One of the squab locking switches is permanently closed. Disconnect each 28 NP cable in turn to locate faulty switch.
Squab locking solenoid fails to function from one switch	Faulty switch connection	Check switch connections.
	Switch fails to operate correctly	Test for voltage on 28 NR cable. If voltage is present, operate switch and test for voltage on 28 NP cable.
		Replace switch if voltage is not present.

	Cable size and colour						
Switch position	14 RY	14 RU	14 GB	14 GW	14 GP	28 Y	28 UG
Up	●			●	●	●	
Down		●		●	●		●
Forward		●	●				●
Backward	●		●			●	
Back Up	●			●		●	
Back Down		●		●			●
Front Up	●				●	●	
Front Down		●			●		●

● Indicates voltage should be present

Table 1

Electrically operated front seats

Component location

Fig. M88

Printed in England
© Rolls-Royce Motors Limited 1979

December 1979
T.S.D. 4200

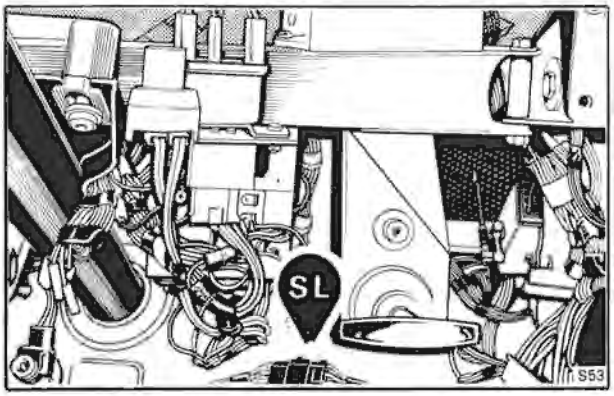

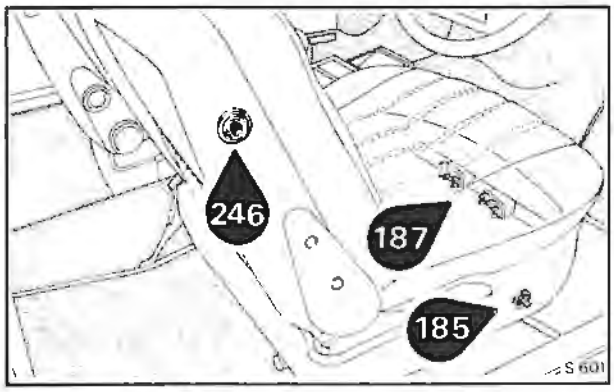

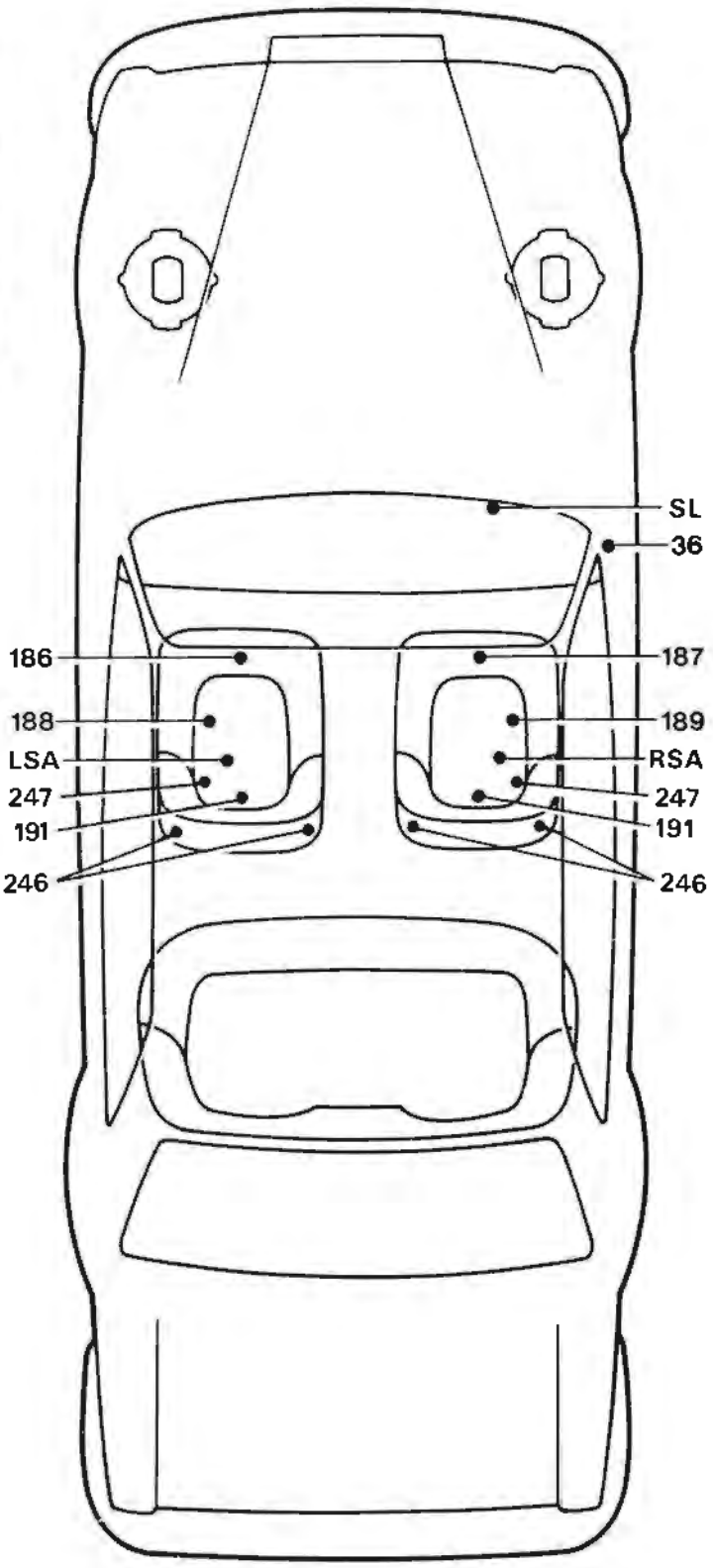

Components

17	Fuseboard
36	Right-hand 'A' post earth
184	Left-hand seat switch
185	Right-hand seat switch
186	Left-hand seat relays
187	Right-hand seat relays
188	Left-hand seat actuators
189	Right-hand seat actuators
190	Left-hand seat motor
191	Right-hand seat motor
246	Front seat backrest release buttons
247	Front seat backrest release solenoids
SL	Seat loom socket
RSA	RH seat actuator socket
LSA	LH seat actuator socket

Electrically operated front seats

Schematic wiring diagram

Fig. M89

Sheet 1 of 2

Refer to Fig. M89 sheet 2 page M10 - 11 for the backrest release mechanism fitted to Corniche and Camargue cars.

Printed in England

© Rolls-Royce Motors Limited 1979

T.S.D. 4200 December 1979

© Rolls-Royce Motors Limited 1979
Printed in England

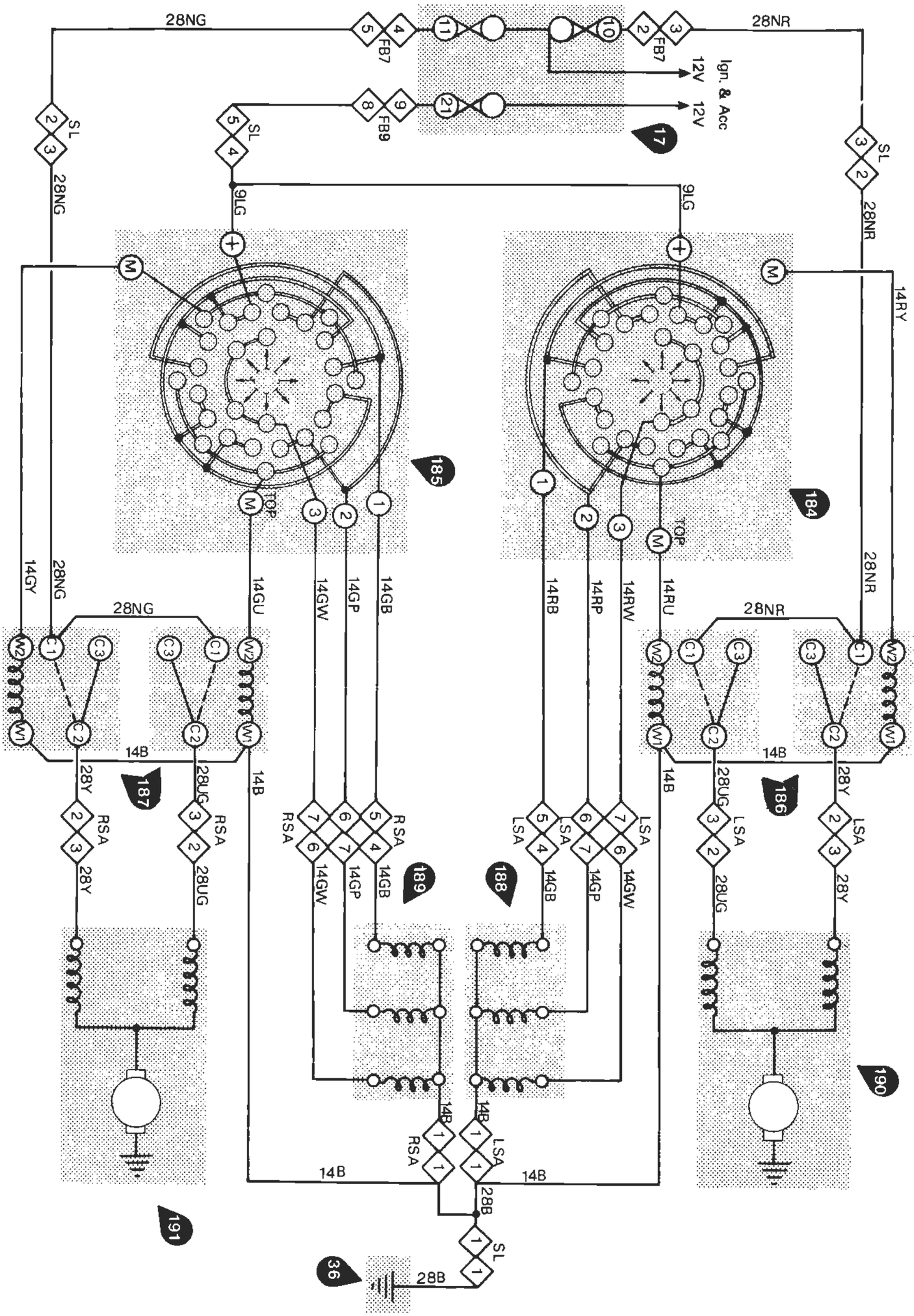

Electrically operated front seats, backrest release mechanism

Schematic wiring diagram

Fig. M89

Sheet 2 of 2

© Rolls-Royce Motors Limited 1979

U477
Printed in England
December 1979
TSD 4200

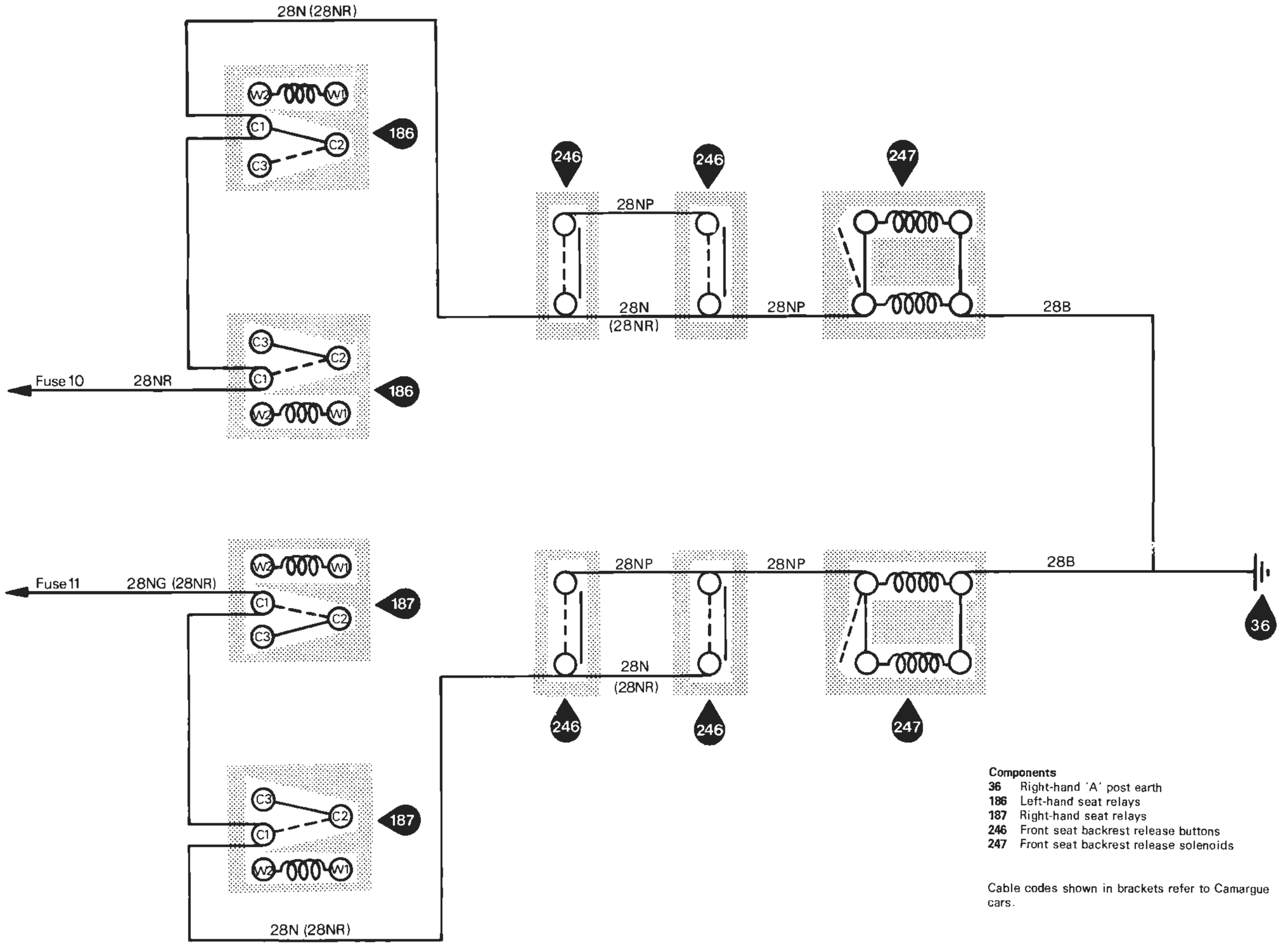

Components

36 Right-hand 'A' post earth
186 Left-hand seat relays
187 Right-hand seat relays
246 Front seat backrest release buttons
247 Front seat backrest release solenoids

Cable codes shown in brackets refer to Camargue cars.

Section M11

Electrically operated window lifts Contents

	Page
Window lift mechanism	M11 - 3
Window lift relay	M11 - 3
Fault diagnosis	M11 - 5
Component location, right-hand drive	M11 - 7
Wiring diagram, right-hand drive	M11 - 9
Component location, left-hand drive and right-hand drive, Australia	M11 - 11
Wiring diagram, left-hand drive and right-hand drive, Australia	M11 - 13
Wiring diagram, division lift	M11 - 15

Printed in England

© Rolls-Royce Motors Limited 1977

July 1977

T.S.D. 4200

Section M11

Electrically operated window lifts

Window lift mechanism - To check

Remove the mechanism from the door as described in Chapter S - Body.

Disconnect the motor from the mechanism ensuring that the nylon body of the one-way clutch remains in the gear casing by inserting a thin blade between the adaptor plate and the gear case. Note also that a loose fitting rubber pad is fitted between the motor and clutch which may drop out.

Carry out torque tests with the motor running in both directions, the performance figures that shall be obtained are as follows:

Ambient temperature 20 - 22 C.

Volts DC	Amps	RPM	Minimum torque
12	4-6	2900	11 gram metres (15 oz. ins.)
12	18-22	1500	47 gram metres (65 oz. ins.)

Measure the insulation resistance between all conductors and the motor frame, this must not be less than 1 megohm at a test potential of 500 volts D.C.

If the motor does not meet the performance figures quoted, it should be replaced with a new motor. However, if the motor is perfectly satisfactory, the fault is with the window lift mechanism which should be checked.

If the system was removed for being noisy, check the motor for noise when carrying out the torque test, if the motor is satisfactory the mechanism should be checked as follows:

Carefully remove the clutch nylon body and rubber pad from the gearcase including the two small peripheral rollers and inspect for damage and wear.

Detach the grommet from the end of the gear case and remove the circlip retaining the wormshaft. Remove the wormshaft at the clutch end and inspect for wear and damage.

Remove the circlip retaining the wormshaft bearing, withdraw and inspect the bearing.

When assembling the clutch nylon body in the gear case, lightly smear the peripheral rollers with Retinax A grease to retain them in the body when assembling around the wormshaft driving dog.

Inspect the top and bottom sprockets for freedom of movement and wear.

Check the freedom of the chain pick-up bracket by loosening the four screws then re-check the mechanism speed. Tighten the screws.

Verify that the chain tension is not too high causing the sprockets to bind.

Window lift relay

The coil of the relay is connected to fuse number 1 and is energised whenever the ignition switch is switched on thereby completing an earth path for the window lift motors. It is only fitted to cars destined for U.S.A. and Australia.

Printed in England
© Rolls-Royce Motors Limited 1977

Section M11

Electrically operated window lifts Fault diagnosis

Malfunction	Possible cause	Action
Complete system failure	Failure of feed to thermal cut-outs	Check the feed to the thermal cut-outs.
Failure of one window lift mechanism only	Motor stalled causing the thermal cut-out to trip	The thermal cut-out protects the window lift motor winding and under normal stalled conditions will take approximately 10 seconds to trip out. Therefore, if the motor is in the stalled condition, the thermal cut-out will trip approximately 10 seconds after being reset. This trip can be heard as a 'click' at the cut-out or by measuring the voltage at the fuseboard socket. If the motor is stalled, ensure that the door switches operate freely and that they can be heard to 'click' when pressed and released. If the switches operate satisfactorily, remove the lower door trim and measure the voltage at the motor connections.
	Short circuit on one of the motor circuits causing thermal cut-out to trip	If the reset button is depressed and the cut-out trips almost immediately, a short circuit is indicated which can be identified as follows: a) Determine which door assembly has short circuit b) Disconnect the motor connections and check the motor windings for short circuit c) If the motor is satisfactory, trace back through the door 'A' post sockets and door switches to identify the short
	Open circuit on the motor feed or earth circuits	Depress the thermal cut-out and check the cut-out for continuity. Verify that the drivers door 'A' post socket is sound and check the continuity of the earth connection between the switches remaining and 'A' post earth. Repeat the procedure for the remaining doors after ensuring that the drivers door switches are satisfactory.

Printed in England
© Rolls-Royce Motors Limited 1977
July 1977
S.D. 4200

Electrically operated window lifts

Component location

Right-hand drive

Fig. M90

Printed in England
© Rolls-Royce Motors Limited 1977

July 1977
.S.D. 4200

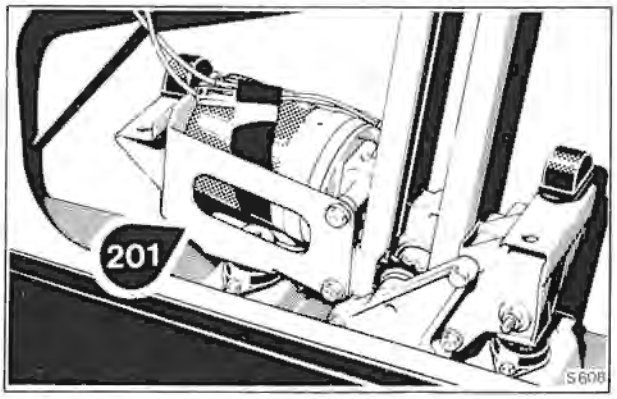

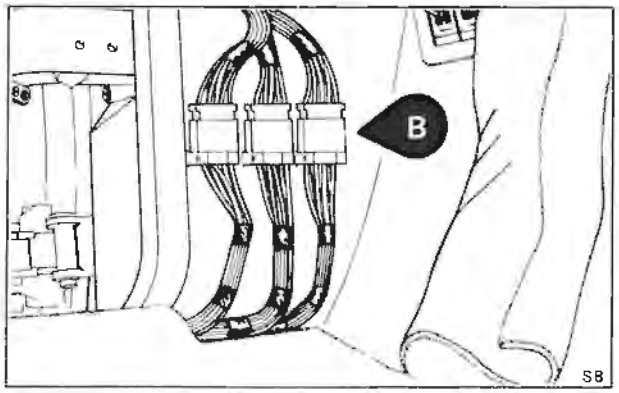

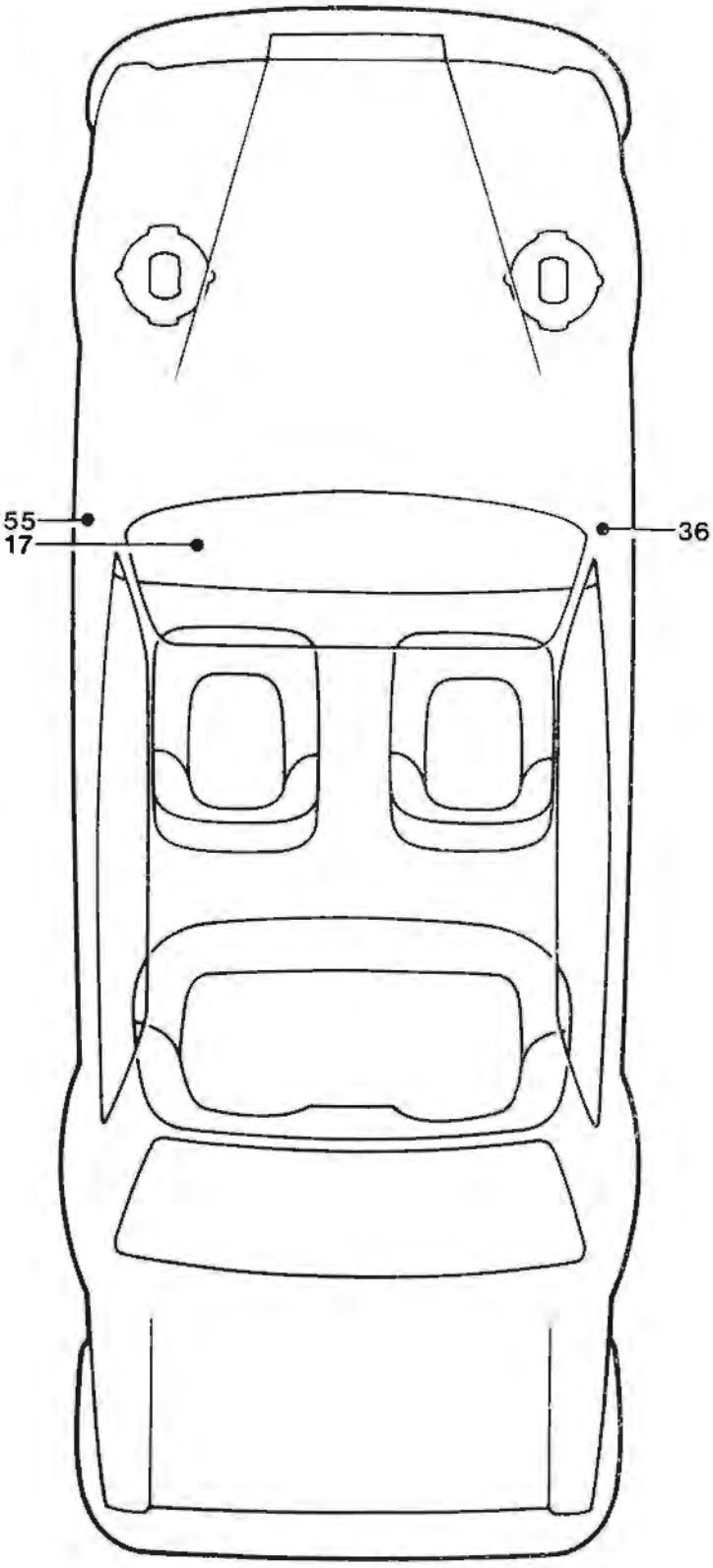

Components

17 Fuseboard
36 Right-hand 'A' post earth
55 Left-hand 'A' post earth
192 Drivers door - Drivers window lift switch
193 Drivers door - Left-hand rear window lift switch
194 Drivers door - Passengers window lift switch
195 Drivers door - Right-hand rear window lift switch
198 Left-hand rear door window lift switch
199 Front passengers door window lift switch
200 Right-hand rear door window lift switch
201 Drivers door window lift motor
202 Left-hand rear door window lift motor
203 Front passengers door window lift motor
204 Right-hand rear door window lift motor

Electrically operated window lifts

Schematic wiring diagram

Right-hand drive

Fig. M91

Printed in England

© Rolls-Royce Motors Limited 1977

© Rolls-Royce Motors Limited 1977
Printed in England

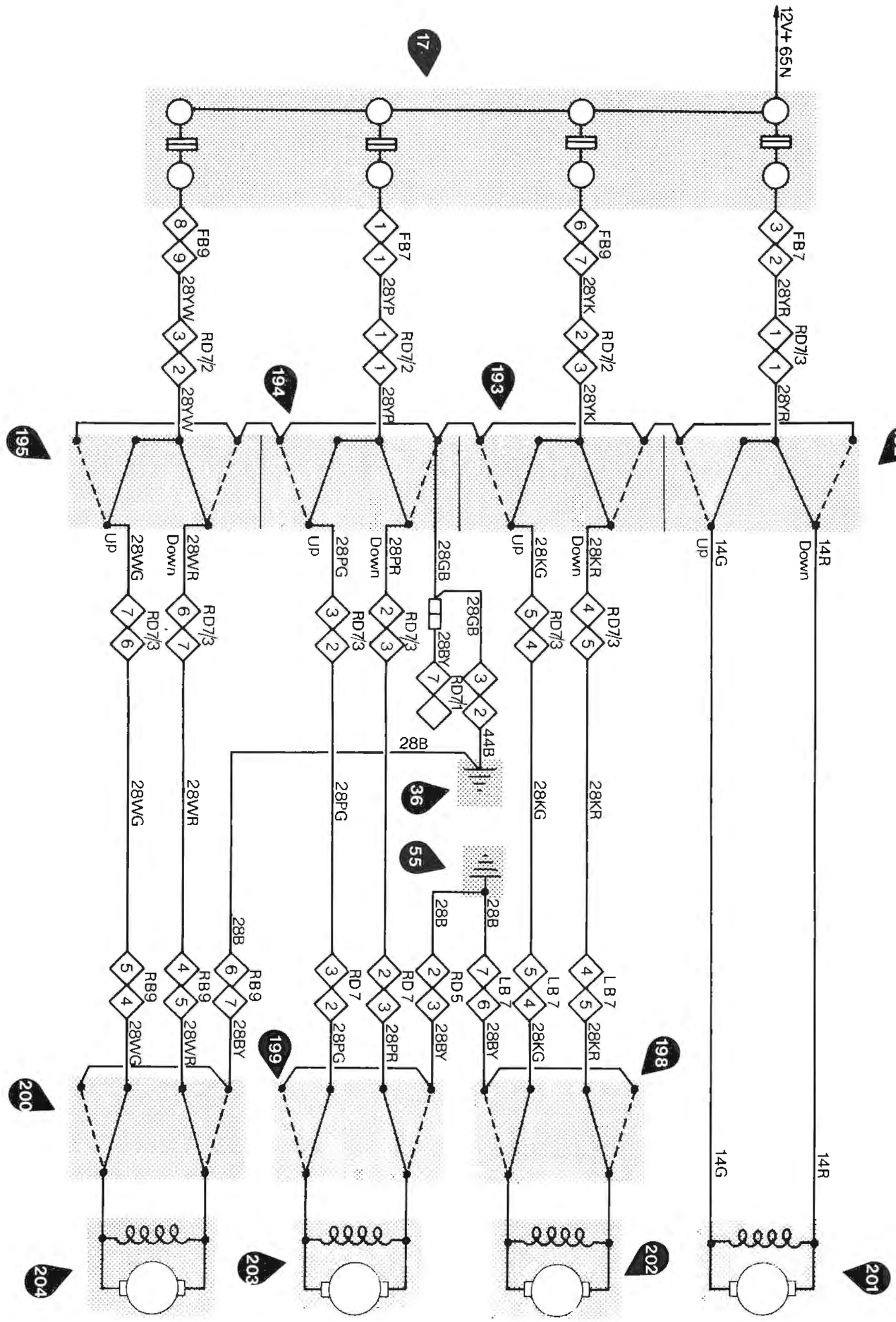

Electrically operated window lifts

Component location
Left-hand drive and
right-hand drive, Australia
Fig. M92

Printed in England
© Rolls-Royce Motors Limited 1977
July 1977
T.S.D. 4200

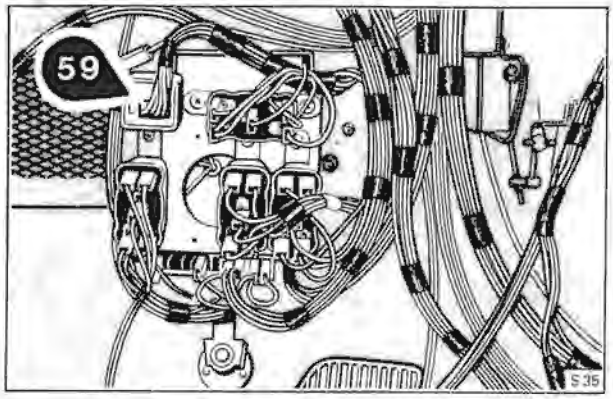

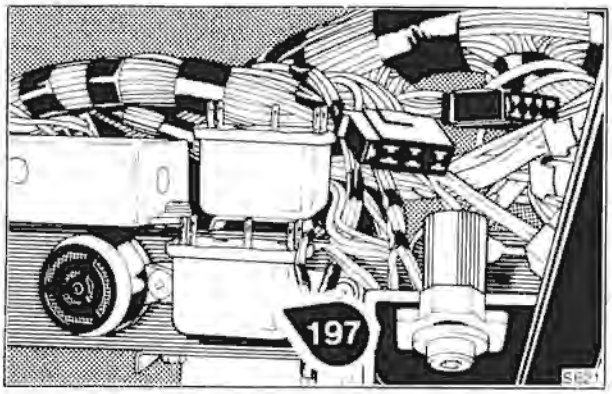

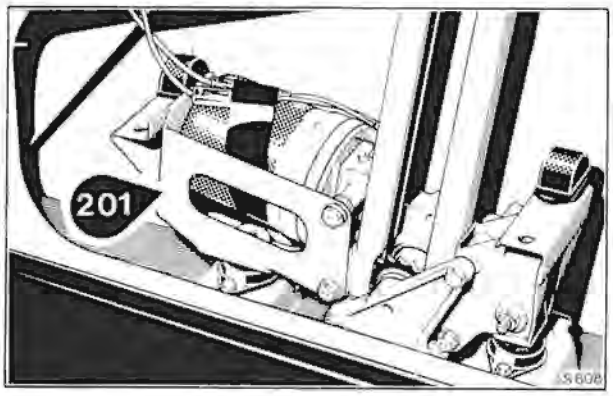

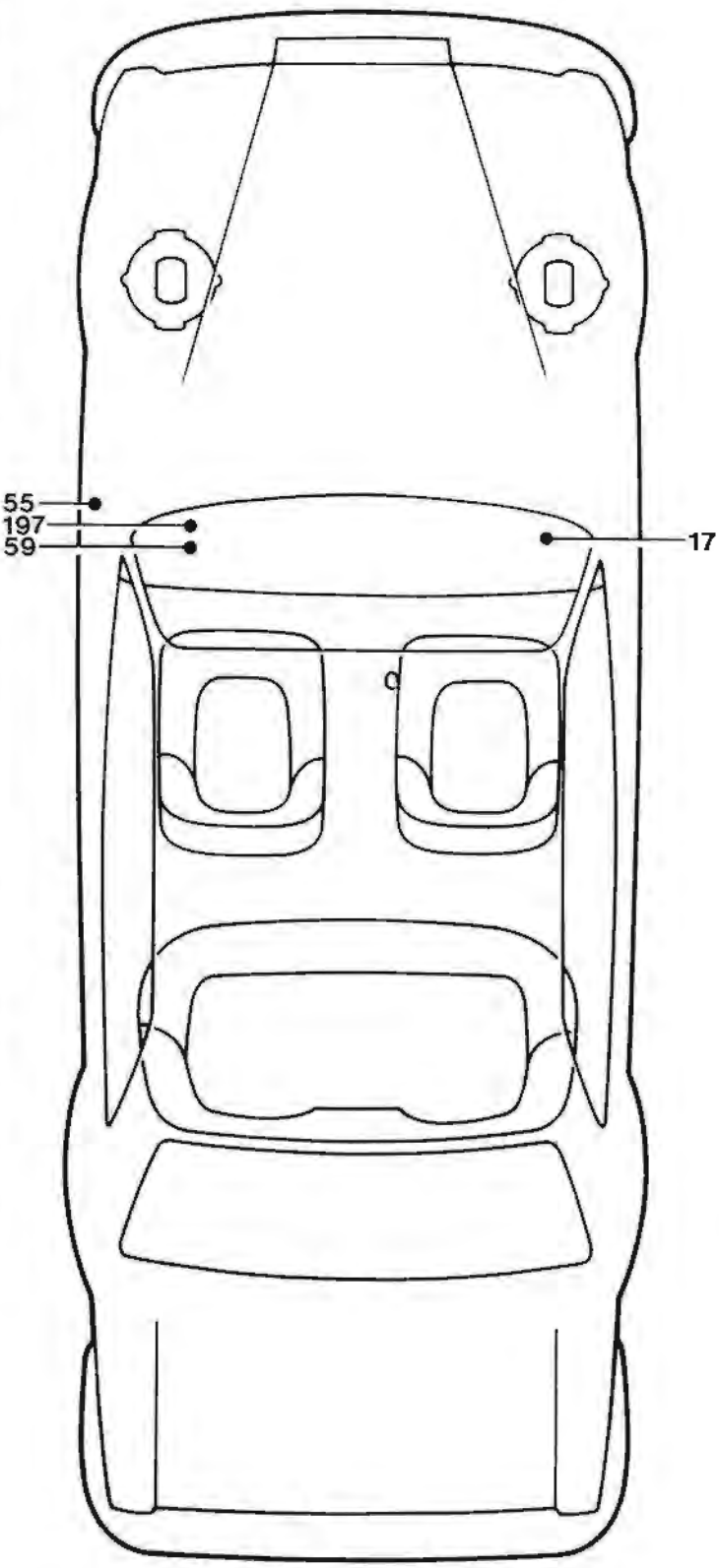

Components

4 4 in 1 instrument
5 Ignition switch
17 Fuseboard
55 Left-hand 'A' post earth
59 Washer fluid level amplifier
77 Speedometer
192 Drivers door - Drivers window lift switch
193 Drivers door - Left-hand rear window lift switch
194 Drivers door - Passengers window lift switch
195 Drivers door - Right-hand rear window lift switch
196 Drivers door - Window lift master switch
197 Window lift relay
198 Left-hand rear door window lift switch
199 Front passengers door window lift switch
200 Right-hand rear door window lift switch
201 Drivers door window lift motor
202 Left-hand rear door window lift motor
203 Front passengers door window lift motor
204 Right-hand rear door window lift motor

Electrically operated window lifts

Schematic wiring diagram
Left-hand drive and
right-hand drive, Australia
Fig. M93

S 52
Printed in England
© Rolls-Royce Motors Limited 1977
July 1977
T.S.D. 42

Printed in England

© Rolls-Royce Motors Limited 1977

July 1977

T.S.D. 42

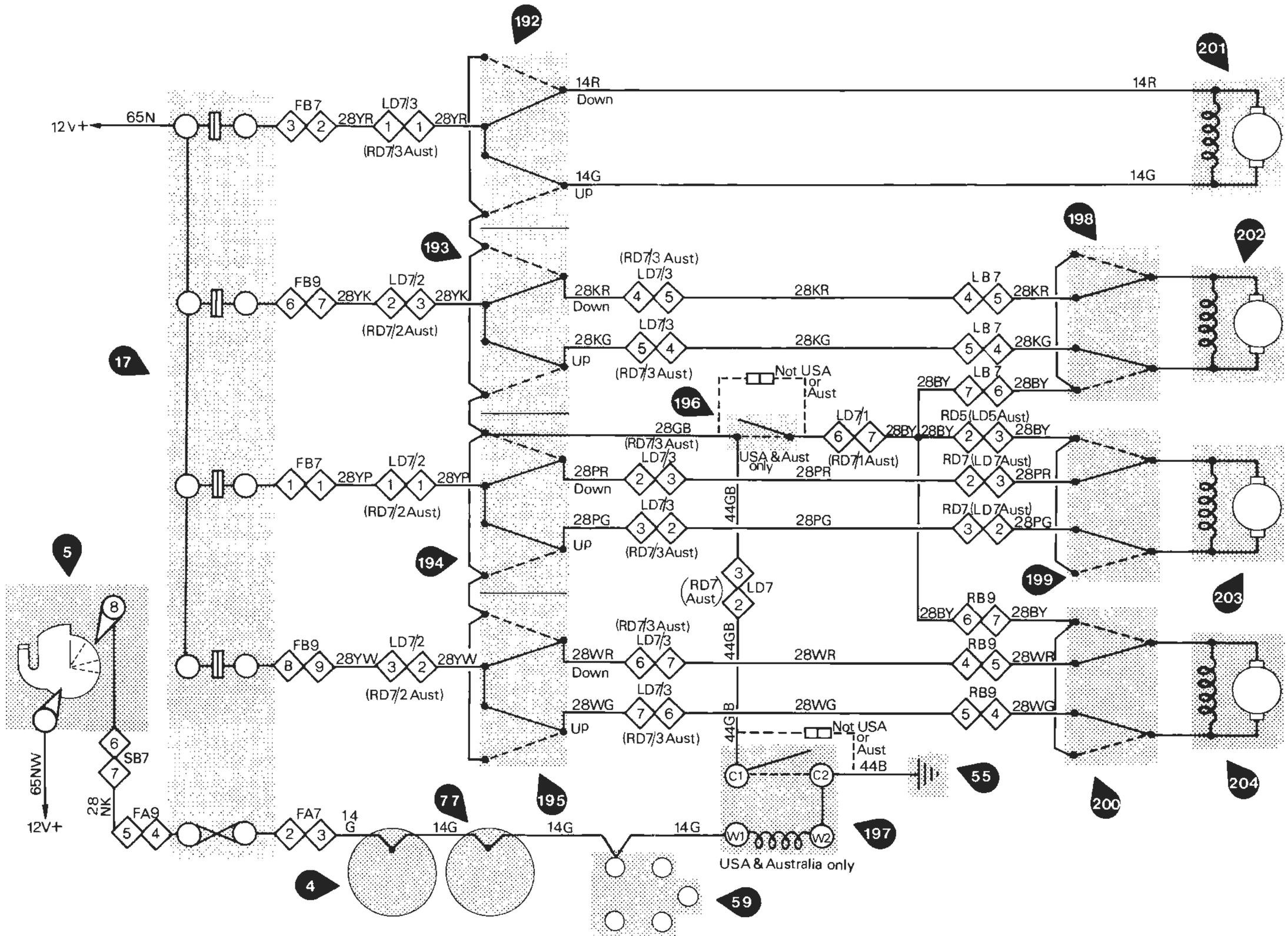

Electrically operated window lifts

Schematic wiring diagram
Division lift
Fig. M94

Printed in England
© Rolls-Royce Motors Limited 1977
July 1977
T.S.D. 4200

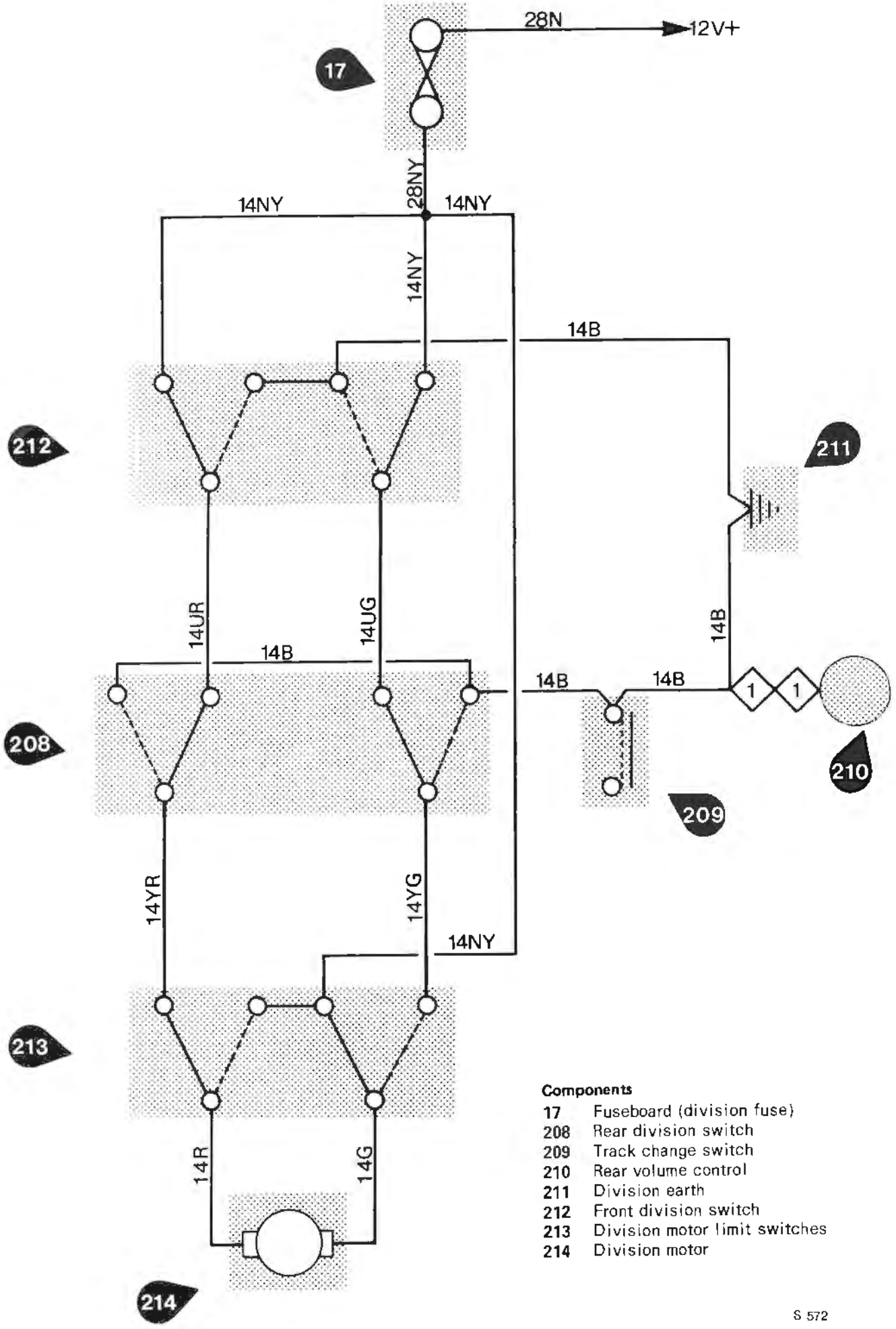

Components

17	Fuseboard (division fuse)
208	Rear division switch
209	Track change switch
210	Rear volume control
211	Division earth
212	Front division switch
213	Division motor limit switches
214	Division motor

S 572

Section M12

Centralised door locking
Contents

	Page
Introduction	M12 - 3
Door locking and unlocking solenoid	M12 - 3
Fault diagnosis	M12 - 5
Schematic wiring diagram (4 door cars)	M12 - 7
Schematic wiring diagram (2 door cars)	M12 - 9

Printed in England

© Rolls-Royce Motors Limited 1977

August 1977

T.S.D. 4200

Section M12

Centralised door locking

Introduction

Two wiring diagrams are included in this section, one for four door cars and one for two door cars.

Door locking and unlocking solenoid

When the solenoid plunger or linkage is sticking it can usually be felt by the increased load necessary to manually operate the sill control. If the solenoid is suspected of being faulty it should be removed from the car and tested.

Door locking and unlocking solenoid - To test

1. Remove the door trim as described in Chapter S.
2. Remove the solenoid from the car.
3. With a maximum of 10 volts applied to one solenoid 'flying lead' and earth, the solenoid plunger must be capable of lifting and holding a load of 0,907 kg. (2 lb.) at an ambient temperature of 20° C.
4. Repeat the test with the remaining 'flying lead'.

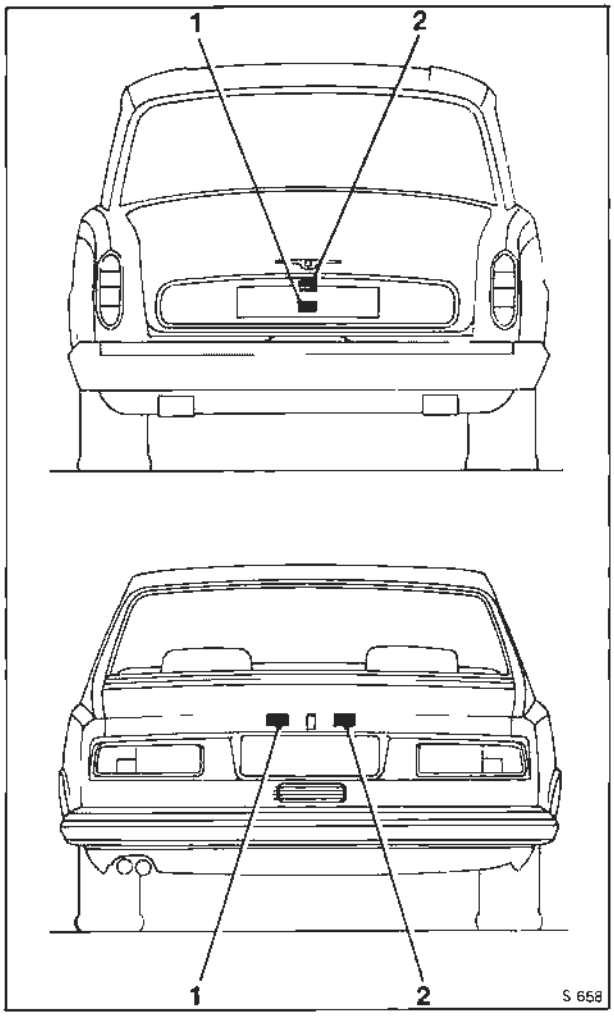

Fig. M95 Boot locking and unlocking solenoids
1 Locking solenoids
2 Unlocking solenoids

Printed in England
© Rolls-Royce Motors Limited 1977

Section M12

Centralised door locking Fault diagnosis

Malfunction	Possible cause	Action
Complete system failure	Feed failure to thermal cut-out	Check the feed from the ammeter shunt.
	Thermal cut-out tripped NB. When the cut-out has been tripped due to an overload or short circuit it will take approximately 30 seconds for the bi-metal to cool down before the cut-out can be reset	Reset the cut-out by depressing the red button on the cut-out. If the cut-out trips out as soon as it has been reset, there is a short circuit in the system. However, if it takes approximately 30 seconds to trip out then one of the solenoids is permanently live, therefore ensure that all the door switches are in the neutral positions. This can be done by slowly operating the switch rockers in each direction and listening for the micro-switch clicking as it is depressed. If the rocker is stiff or the micro-switch cannot be heard to operate then the switch assembly should be removed and inspected. If a short circuit is suspected after depressing the cut-out, remove fuseboard A socket and determine whether the fault is on the doors or seat looms.
	Fuseboard A socket loose	Refit the socket.
Complete system failure following a switch operation	Short circuit in the switched circuit	Determine whether the cut-out trips immediately any door switch is put to the lock or unlock positions or the boot switch to the unlock position. After identifying which switch operation trips the cut-out, trace the fault through the door looms or body loom to the solenoid assembly. Note: On two-door cars, the unlock loading resistor is mounted in the drivers door and the lock loading resistor is in the passengers door.
	Faulty switch causing a permanent feed to a solenoid thus making the cut-out operate	Check the operation of the door switches to determine if they are sticking.
Failure of both lock and unlock facility on one door	Failure of feed	Check the 28 RN cable to the switch assembly.
	Faulty earth	Check the earth cable to the appropriate earth point.
	Mechanical failure in the solenoid linkage	Sticking of the solenoid plunger or linkage can usually be felt by the increased load necessary to manually operate the sill control.
Failure of one function on any door	Solenoid winding failure	Disconnect the solenoid and provide an external feed with an ammeter in the circuit. If there is no current flowing, the solenoid winding is open circuit.
	Switch failure	Ensure that both sides of the switch is live.

Printed in England
© Rolls-Royce Motors Limited 1977
August 1977
T.S.D. 4200

Malfunction	Possible cause	Action
	Open circuit between the switch and the solenoid	Check for live feed at switch and solenoid.
	Mechanical failure in the solenoid linkage	Sticking of the solenoid plunger or linkage can usually be felt by the increased load necessary to manually operate the sill control.
Failure of boot locking and unlocking facility	Poor earth connection	Check the earth connection at the left-hand boot earth point
	Mechanical failure	Check the freedom of movement of the linkage and solenoid assembly
Failure of boot locking facility only	Failure of live feed to solenoid	If the boot will not lock when any door switch is operated, check the 28 BK cable at left-hand 'A' post body socket.
	Faulty earth	Check the earth connection in the boot lid connecting block.
	Solenoid winding failure	At the boot lid connection block, verify that 28 SK connection is live and the earth connection is sound. If both connections are satisfactory, the solenoid winding should be checked for open circuit.
Failure of boot unlocking facility only	Failure of live feed to boot unlocking switch	Check the feed on the 28 RN and 28 SK cables at boot unlocking switch, left-hand 'A' post sockets and boot lid connecting block.
	Faulty earth	Check the earth connection at the boot lid connecting block.
	Failure of solenoid winding	If both feed and earth connection are sound at the boot connecting block check the solenoid winding.

S 575

Centralised door locking

Schematic wiring diagram
4 door cars
Fig.M96

Printed in England

© Rolls-Royce Motors Limited 1979

T.S.D. 4200 December 1979

S 575

Printed in England

© Rolls-Royce Motors Limited 1979

T.S.D. 4200 December 1979

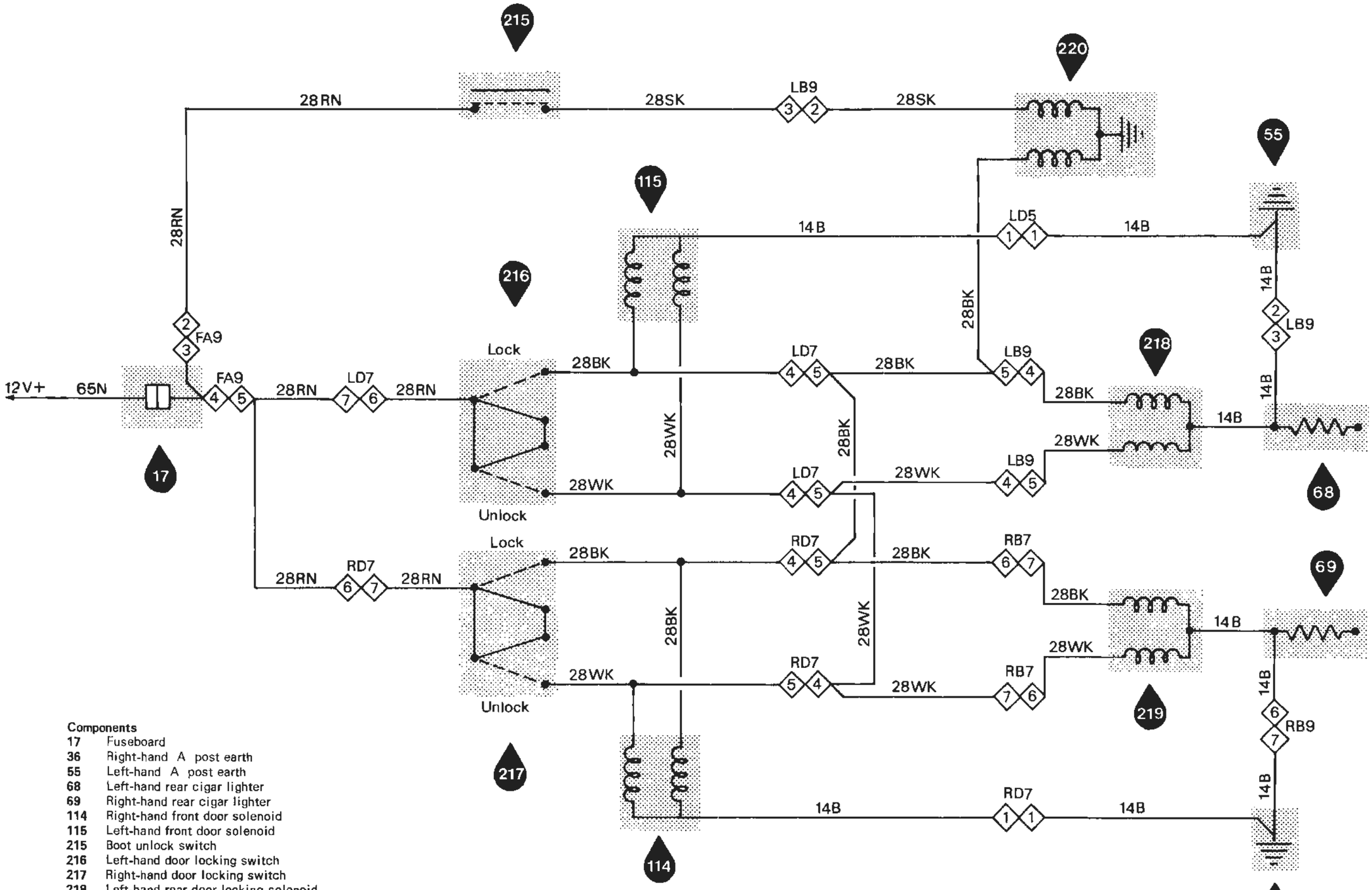

Components

17	Fuseboard
36	Right-hand A post earth
55	Left-hand A post earth
68	Left-hand rear cigar lighter
69	Right-hand rear cigar lighter
114	Right-hand front door solenoid
115	Left-hand front door solenoid
215	Boot unlock switch
216	Left-hand door locking switch
217	Right-hand door locking switch
218	Left-hand rear door locking solenoid
219	Right-hand rear door locking solenoid
220	Boot unlocking and locking solenoid

Centralised door locking

Schematic wiring diagram

2 door cars

Fig. M97

Printed in England

© Rolls-Royce Motors Limited 1977

T.S.D. 4900 August 1977

© Rolls-Royce Motors Limited 1977
Printed in England

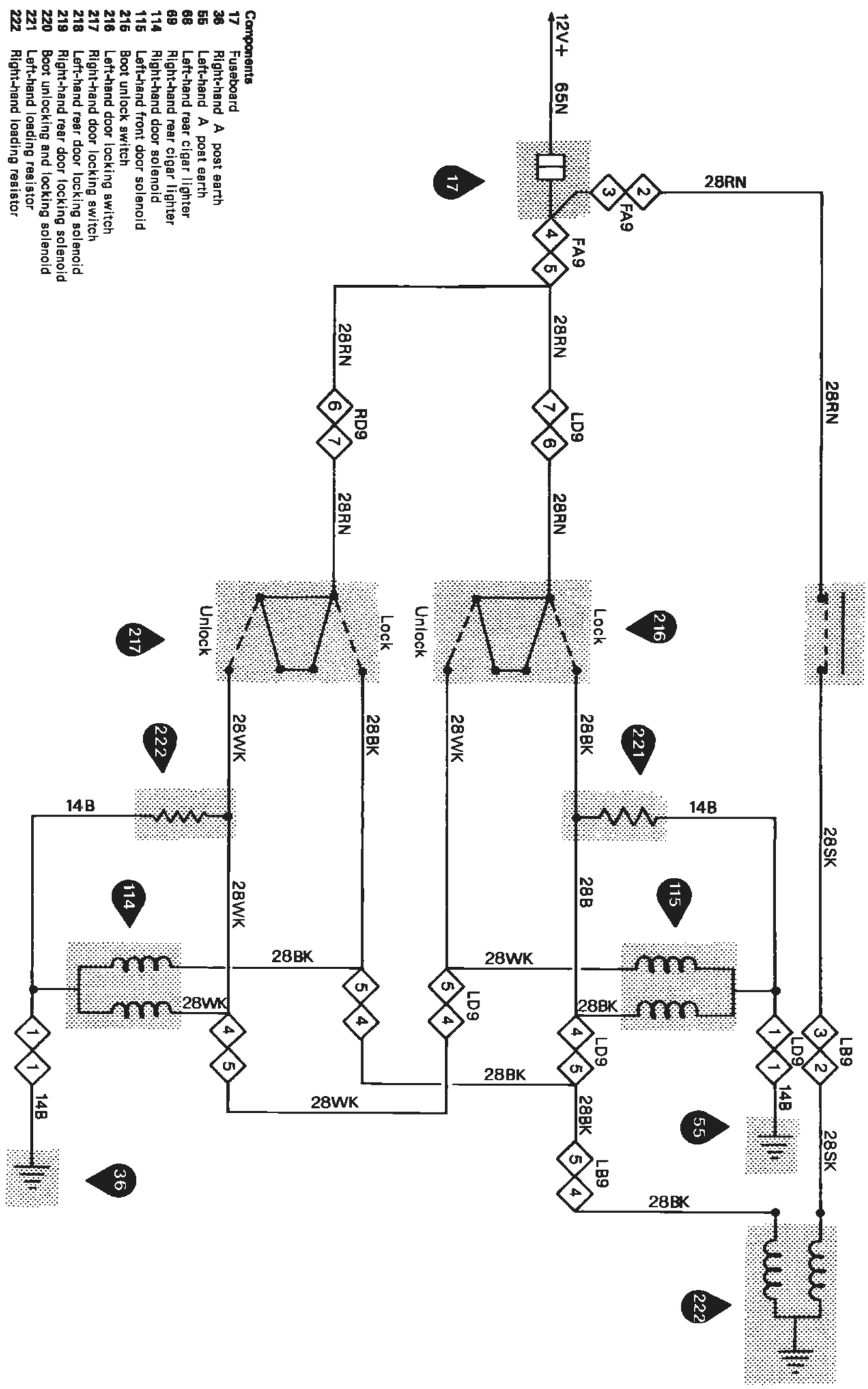

Components

17	Fuseboard
36	Right-hand A post earth
55	Left-hand A post earth
68	Left-hand rear cigar lighter
69	Right-hand rear cigar lighter
114	Right-hand door solenoid
115	Left-hand front door solenoid
216	Boot unlock switch
217	Left-hand door locking switch
218	Right-hand door locking switch
219	Left-hand rear door locking solenoid
220	Right-hand rear door locking solenoid
221	Boot unlocking and locking solenoid
222	Left-hand loading resistor
	Right-hand loading resistor

Section M13

Electric gear change
Contents

	Page
Introduction	M13 - 3
Fault diagnosis	M13 - 5
Schematic wiring diagram	M13 - 9

Printed in England

© Rolls-Royce Motors Limited 1977

August 1977

T.S.D. 4200

Section M13

Electric gear change

Introduction

This section deals only with fault diagnosing and shows the wiring diagram for the system. Details of actuator removal and testing and gear selector removal are given in Chapter T.

Printed in England

© Rolls-Royce Motors Limited 1977

August 1977

T.S.D. 4200

Section M13

Electric gear change Fault diagnosis

Malfunction	Possible cause	Action
Complete system failure	Thermal cut-out failure	Ensure that the 28 N cable at fuseboard B socket is 'live'. Remove the thermal cut-out and either replace with a known good cut-out or test the cut-out to verify that it is not permanently open circuit. N.B. Allow the cut-out to cool down after tripping for at least 30 seconds before pressing the reset button.
	Failure of feed to actuator	Remove the plug from the gear change actuator and trace the fault as follows: Check 14 NB cable to socket N, left-hand toeboard socket (engine side and saloon side) and fuseboard.
	Failure of feed to selector switch	Remove the top half of the steering column cowl and ensure that the NB centre contact is live. Ensure that each selector fixed contact is live where selected by the moving contact.
	Short circuit on 'feed' line causing the thermal cut-out to operate	Remove the actuator plug. If the thermal cut-out can now be reset, the actuator should be removed and replaced or stripped and rebuilt in accordance with the workshop manual. If the short circuit persists after removing the actuator plug, inspect the selector switch feed moving contact to ascertain if it is short circuited to earth. Insert a piece of insulating material (e.g. paper) between the fixed and moving contacts and determine whether the fixed contact is down to earth. If the short circuit persists, inspect the left-hand toeboard socket and fuseboard socket.
	Actuator failure	If the actuator feed cables are live and the actuator fails to function under any circumstances then the actuator should be removed and checked or replaced. N.B. An earth failure is unlikely because the actuator is internally earthed and also has a separate earth lead.
Complete system failure after ignition key has been removed, re-inserted and turned to the OFF or ON position	As complete system failure	As complete system failure.
	Poor earth connection to switchbox	Remove the 7-way plug from the switchbox and determine whether the 14 BS cable is earthed when the ignition key is turned to the OFF position. If the cable is not earthed the switchbox is faulty or earth lead to switchbox

Printed in England
© Rolls-Royce Motors Limited 1977
August 1977
T.S.D. 4200

Malfunction	Possible cause	Action
		Connect the BS cable to earth at the 7-way switch-box plug and both sides of the left-hand toeboard socket. If the actuator still fails to function the fault is with the actuator or actuator plug. Note: The following procedure can be followed to check the general operation of an actuator: Remove the actuator from the car. Connect a permanent 12 volt positive feed to the N connection of the actuator plug. Connect the outside of the actuator or the H connection of the actuator plug to earth. Connect the F socket of the actuator plug to earth. Provide a positive feed in turn to the following connections of the actuator plug, M, A, B, C, D & E; the actuator should move to PARK, REVERSE, NEUTRAL, INTERMEDIATE and LOW respectively. Remove the earth connection from connection F, the actuator should now only move towards the PARK position, i.e. the lever should move towards the plug end of the actuator. The actuator should only move away from the PARK position when connection F is reconnected to earth. If the actuator functions correctly during these bench tests after failing to function in-situ, the fault is in the actuator plug and socket.
Failure to select any one gear position	Selector switch faulty	This may show as a failure to select a gear when the actuator arm is moving in one direction although the gear can be selected when the arm is moving in the opposite direction, e.g. failure to select N after being in D, I or L but capable of selecting N after being in P or R. At the selection switch, check the position of the fixed contact relative to the moving contact and adjust if necessary. (Refer to Chapter T) Check the contact pressure and continuity of the moving contact in each selected position (Refer to Chapter T)
	Selector cable open circuit	If the selector switch functions correctly, check for continuity at both sides of the left-hand toeboard socket.
	Actuator faulty	If the electrical circuit is satisfactory, check the actuator as previously described, If the actuator selects each position correctly during bench testing, the fault is with the actuator plug and socket.
Failure to automatically select 'P' when the ignition key is removed	Failure of ignition key switch	Remove the ignition key and verify that the 14 LGS cable is connected to 14 WP cable at switchbox socket. Insert the ignition key and ensure that 14 LGS cable is connected to earth.

Malfunction	Possible cause	Action
	Failure of actuator park micro-switch	With the actuator in P, check that the LGS cable at the switchbox socket is connected to earth via the left-hand toeboard socket. If the LGS cable is not earthed, remove the plug from the actuator and verify that with the actuator in PARK, connection P only goes to earth. Failure to do so indicates a faulty micro-switch in the actuator.

Printed in England
© Rolls-Royce Motors Limited 1977

Electric gear change

Schematic wiring diagram

Fig. M98

S 581

Printed in England

© Rolls-Royce Motors Limited 1977

T.S.D. 4200 August 1977

Components

5	Ignition switch
12	Gearbox neutral start switch
17	Fuseboard
36	Right hand A post earth
56	Left hand valance earth
153	Reversing switch
223	Height control solenoid
224	Gearchange selector
225	Gearchange actuator
226	Height control switch
227	Park microswitch

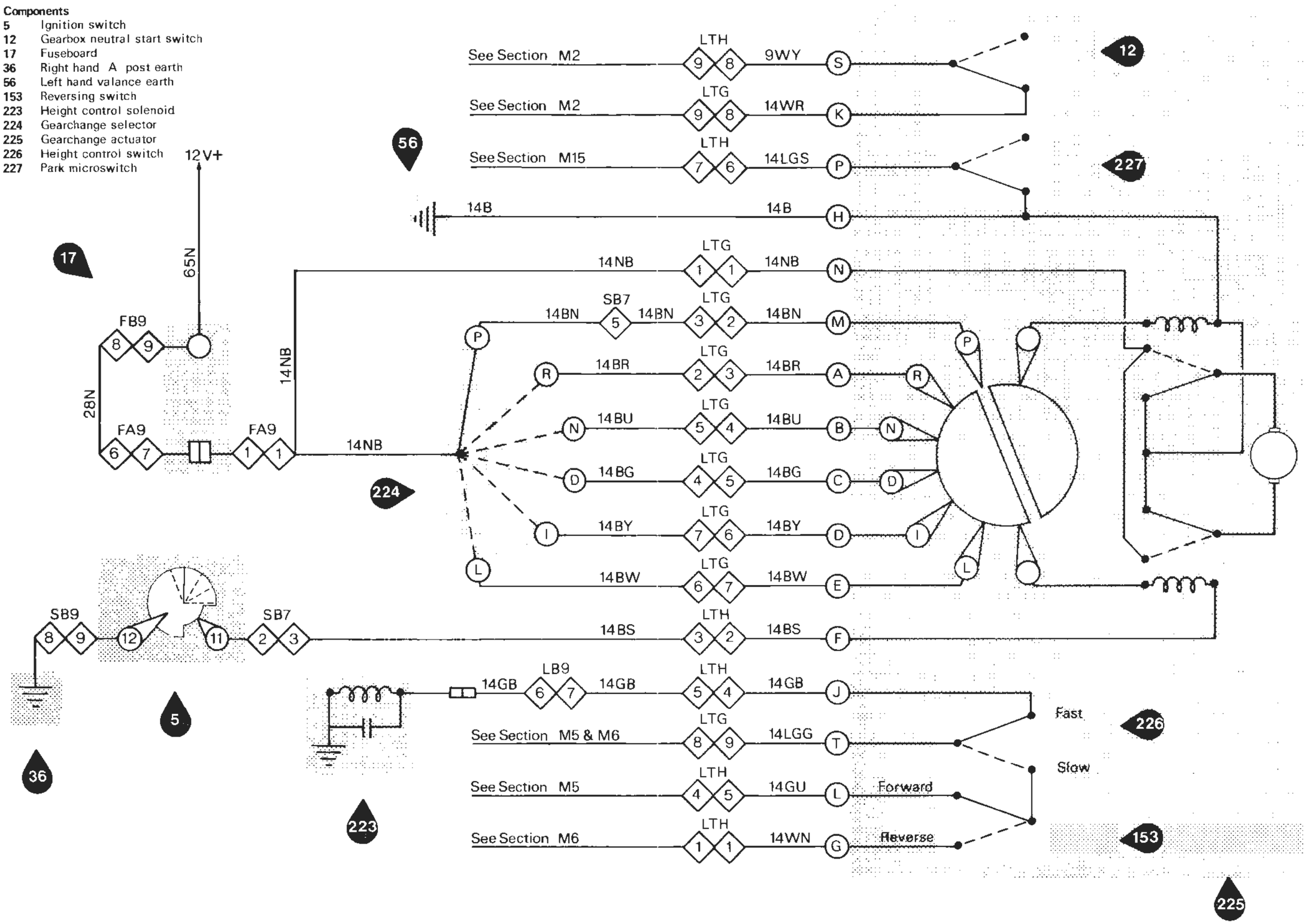

Section M14

Horns
Contents

	Page
Horns	M14 - 3
Fault diagnosis	M14 - 5
Schematic wiring diagram	M14 - 7

Printed in England
© Rolls-Royce Motors Limited 1977

August 1977
T.S.D. 4200

Section M14

Horns

Horns

The horns are 'Mixo' TR 129 high and low note and are sealed units requiring no maintenance.

No attempt should be made to adjust the horns as they are manufactured and adjusted to European standards.

Horn circuit - To test

1. Verify that fuse 7 and fuse 14 are satisfactory.
2. At the relay, connect terminal C1 to the main battery terminal of the starter relay. If the horns are inoperative the fault is in the horns or wiring from relay to horns to earth.
3. If the horns were satisfactory connect relay terminal W2 to a good earth. This isolates the horn button and if the horns operate the horn button or wiring to the button is faulty. If the horns do not operate, the fault is with either the horn relay or wiring from the fuseboard to the relay.

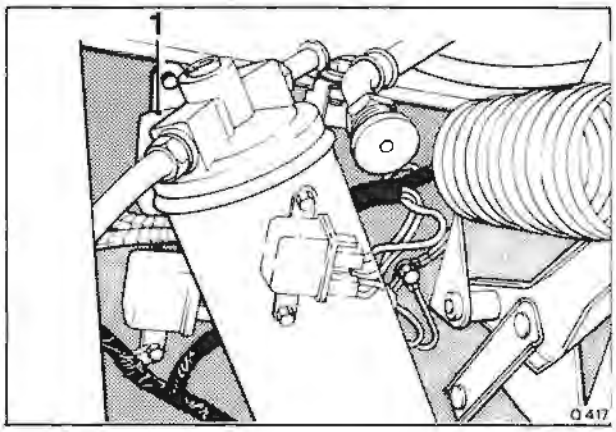

Fig. M99 Horn relay location
1. Horn relay

Printed in England
© Rolls-Royce Motors Limited 1977

Section M14

Horns
Fault diagnosis

Malfunction	Possible cause	Action
Both horns inoperative	Fuse 7 or fuse 14 blown	Inspect fuses. If fuse 7 has blown the head flash circuit will also be inoperative. A faulty head flash relay or wiring could cause the fuse to blow.
	Faulty horn relay	Check horn circuit.
	Faulty horn switch or column earth brush	At horn switch connect purple/black cable to a good earth, if horns operate then the switch is faulty or the earth brush is faulty.
	Poor connection	Check 44 PN and 9 UG cables at relay and toeboard socket M. Check also 9 PB cable at toeboard L and horn switch.
One horn inoperative	Horn faulty	Substitute horn.
	Poor connection	Check 14 PY and 28 B cables to horn.
	Poor earth	Check 28 B cables at front earth (left-hand or right-hand).
Poor note	Horn faulty	Replace horn.

Printed in England
© Rolls-Royce Motors Limited 1977
August 1977
T.S.D. 4200

Horns

Schematic wiring diagram
Fig. M100

Printed in England
© Rolls-Royce Motors Limited 1977
August 1977
T.S.D. 4200

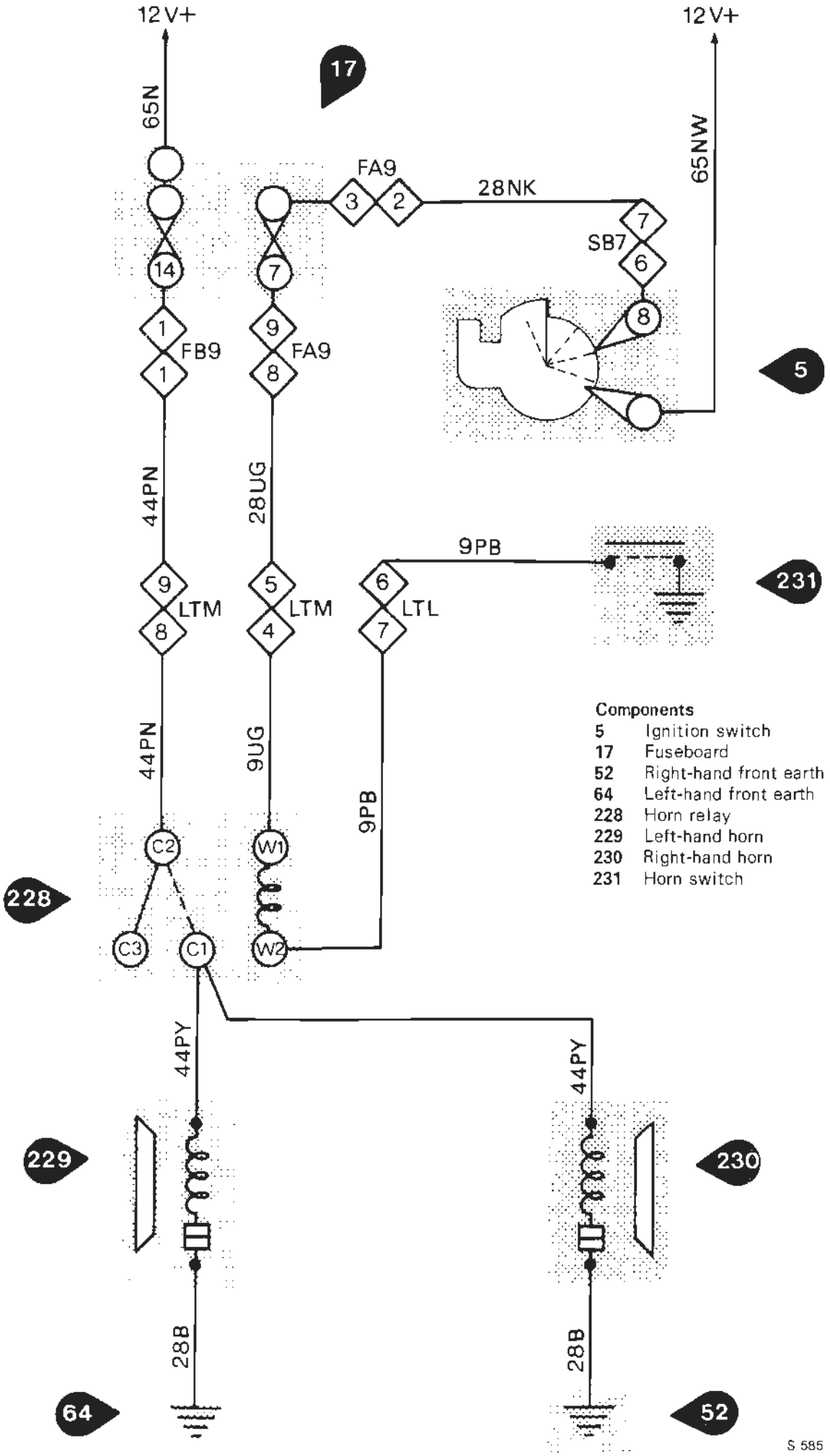
12V+
12V+
17
65N
65NW
FA9
28NK
SB7
14
7
3
2
7
6
8
1
FB9
1
9
FA9
8
5
44PN
28UG
9PB
9
LTM
8
5
LTM
4
6
LTL
7
231
44PN
9UG
9PB
C2
W1
228
C3
C1
W2
44PY
44PY
229
230
28B
28B
64
52
Components
5 Ignition switch
17 Fuseboard
52 Right-hand front earth
64 Left-hand front earth
228 Horn relay
229 Left-hand horn
230 Right-hand horn
231 Horn switch
S 585

Section M15

Hood mechanism
Contents

	Page
Motor/pump unit - To remove	M15 - 3
Solenoid valves - To remove	M15 - 3
Motor/pump unit electrically operated switch - To remove	M15 - 3
Fault diagnosis	M15 - 5
Component location	M15 - 7
Schematic wiring diagram	M15 - 9

Printed in England
© Rolls-Royce Motors Limited 1977
September 1977
S.D. 4200

Section M15

Hood mechanism

Motor/pump unit-To remove

1. Remove all hydraulic fluid from the reservoir as described in Chapter S - Body.
2. Disconnect the electrical connections from the motor/pump unit, noting the positions to facilitate assembly.
3. Disconnect the hydraulic fluid feed pipe and the hydraulic high pressure supply hose from the motor/pump unit.
4. Fit suitable blanking plugs into the vacant holes to prevent ingress of foreign matter.
5. Remove the two motor/pump unit securing straps
6. Remove the motor/pump unit.

Solenoid valves-To remove

1. Disconnect the battery-
2. Using a syringe, remove all hydraulic fluid from the reservoir.
3. Disconnect the appropriate cable at the junction box.
4. Disconnect the hydraulic connections.
5. Remove the two nuts and bolts securing the solenoid valve to the assembly box.
6. Remove the solenoid valve.

Motor/pump unit electrically operated switch-To remove

1. Disconnect the battery.
2. Disconnect the electrical connections, noting the position to facilitate assembly.
3. Unscrew and remove the two switch securing nuts and bolts.
4. Remove the switch.

Printed in England
© Rolls-Royce Motors Limited 1977
September 1977
P.S.D. 4200

Section M15

Hood mechanism Fault diagnosis

Malfunction	Possible cause	Action
Hood lift will not operate.	Fuse 8 faulty Hood interlock relay not operating.	Check for feed at and through fuse. A. Check for feed on N/S wire. If no feed, check connection at fuse-board. B. Check for earth on LG/S wire If no earth, check at toe-board socket 'H'. If no earth at this point, check gear-box actuator as detailed below. C. Check for feed on UN wire. If no feed, check the relay.
Hood lift will not operate	'Park' microswitch in gearbox actuator faulty.	Remove the actuator plug and connect pin P of the plug to earth. If the hood will now operate the gearbox actuator is faulty or there is an open circuit in the 14B cable from pin H to left-hand valance earth.
	Hood lift switch faulty.	Switch ignition to RUN. At the hood lift switch, connect the 14UN cable to the 14UP cable, if the motor operates, connect the 14UN cable to 14UY cable to close the hood or to 9UK cable to open the hood.If the hood operates satisfactorily, the switch is faulty.
	Hood lift relay faulty.	Remove the motor connection from the relay and connect a 12v test lamp from the relay to earth. Switch on the ignition and operate the hood switch, the test lamp should light. If the test lamp does not light test for live feed on 14UP cable at relay, if live feed is present then the relay is faulty.
	Hood lift motor inoperative.	If relay is satisfactory (i.e. test lamp is lit) the motor should operate if it is satisfactory. Check cable and battery connection.

Printed in England
© Rolls-Royce Motors Limited 1977
September 1977
T.S.D. 4200

Hood mechanism

Component location
Fig. M101

Schematic wiring diagram
Fig. M102

Printed in England
© Rolls-Royce Motors Limited 1977
September 1977
P.S.D. 4200

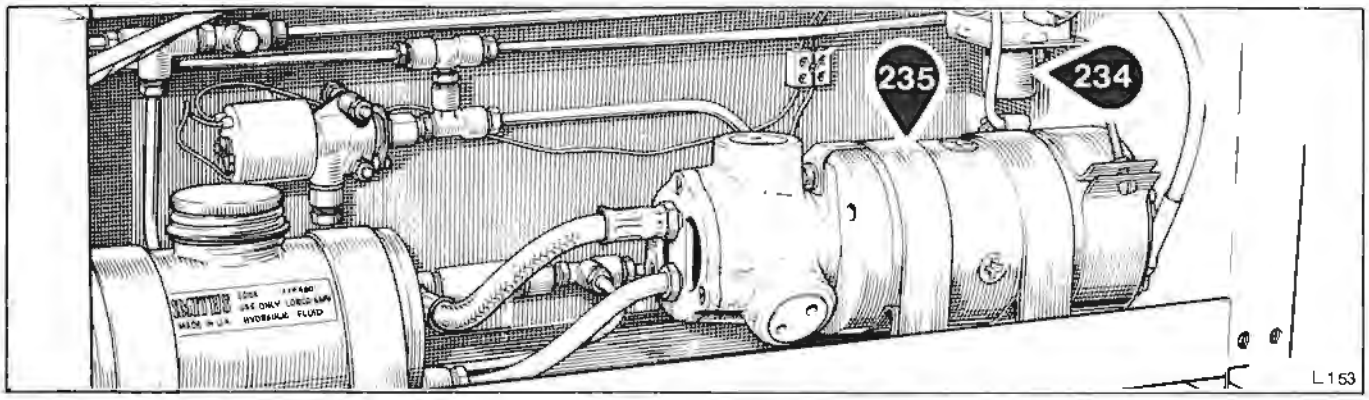

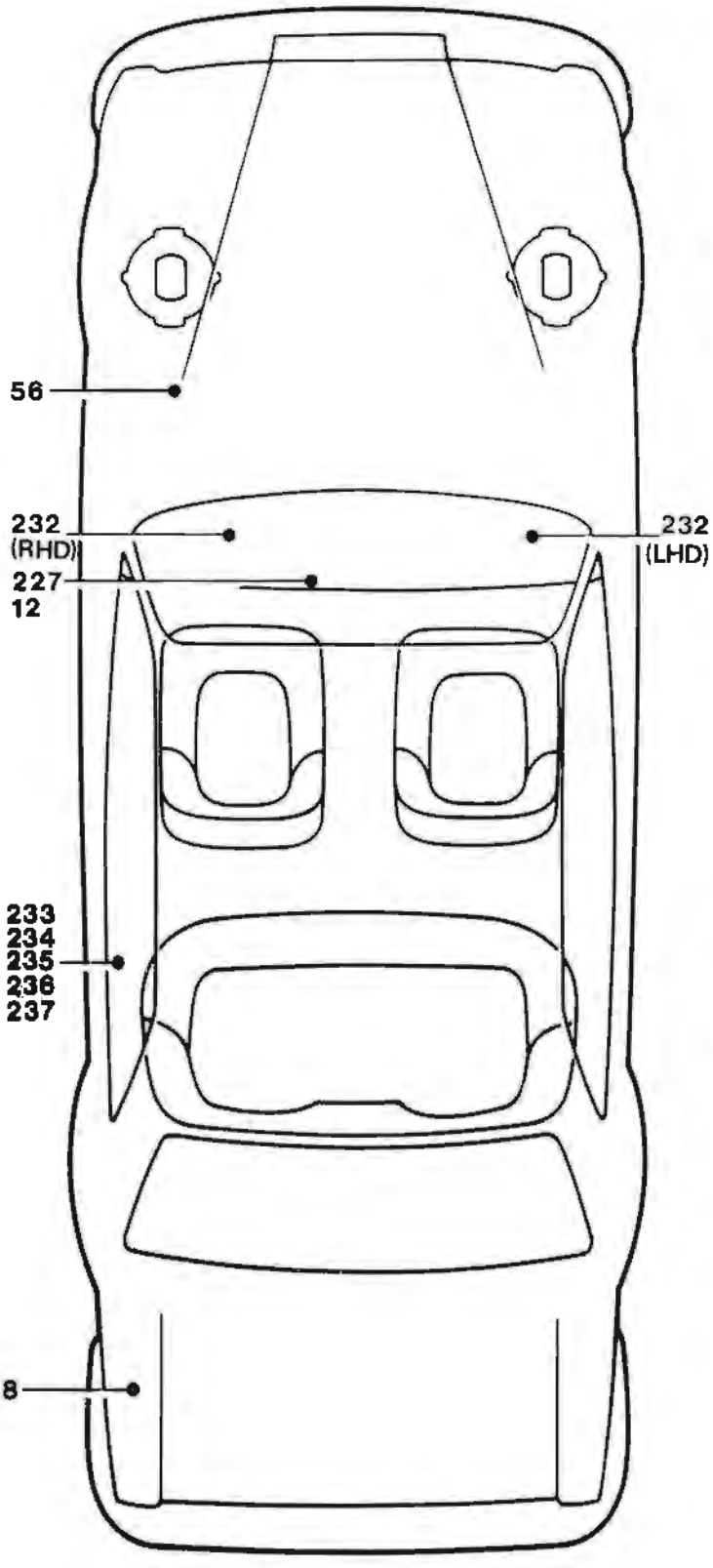

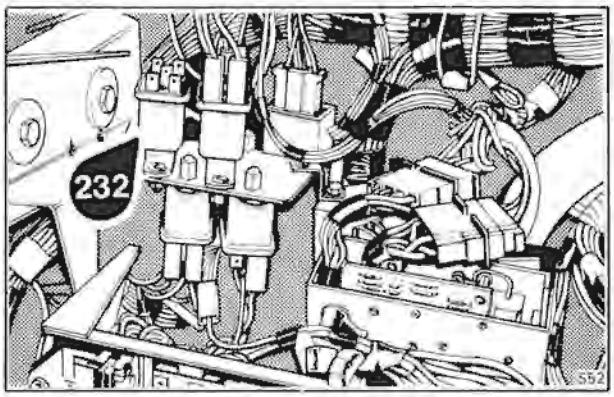

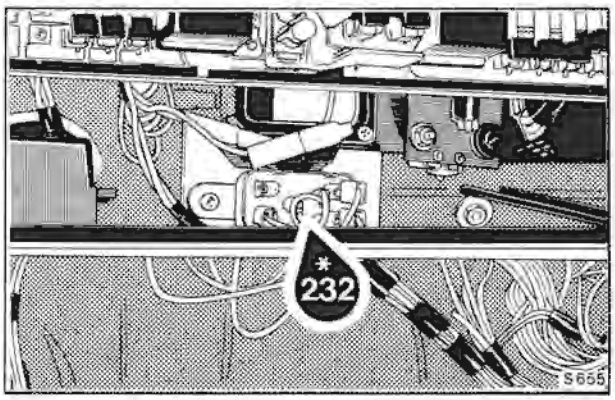

Components

5	Ignition switch
8	Battery
12	Gearchange actuator
17	Fuseboard 'A'
56	Left-hand valance earth
227	'Park' microswitch
232	Hood interlock relay
233	Hood lift switch
234	Hood lift relay
235	Hood lift motors
236	Hood lift solenoid valve (close)
237	Hood lift solenoid valve (open)
*	All left-hand drive

Fig. M101

S 654

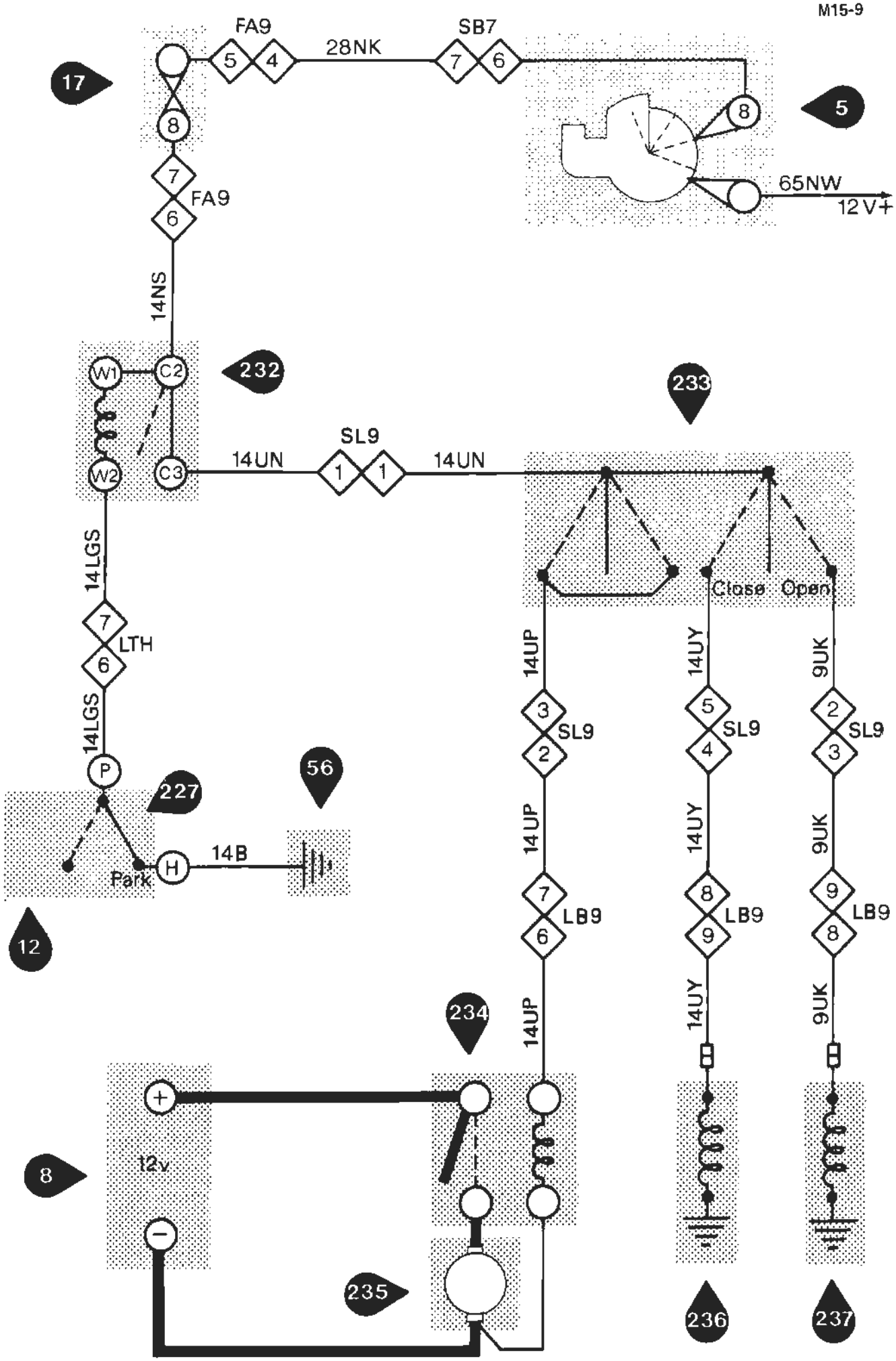

Fig. M102

Printed in England
© Rolls-Royce Motors Limited 1977

Section M16

Socket wiring and fuseboard layout Contents

	Page
Introduction	M16 - 3
Switchbox wiring	M16 - 5
Oil check switch socket Panel dim socket, speed control socket and diode block	M16 - 7
Splice connections	M16 - 9
Main distribution, seat belts loom, seat loom, boot,direction indicator switch and hazard warning switch sockets	M16 - 11
Right-hand drive cars	
Left-hand door and body sockets	M16 - 13
Right-hand door and body sockets	M16 - 15
Left-hand toeboard sockets	M16 - 17
Right-hand toeboard sockets	M16 - 19
Fuseboard layout	M16 - 21
Left-hand drive cars	
Left-hand door and body sockets	M16 - 23
Right-hand door and body sockets	M16 - 25
Left-hand toeboard sockets	M16 - 27
Right-hand toeboard sockets	M16 - 29
Fuseboard layout	M16 - 31

Printed in England
© Rolls-Royce Motors Limited 1977

September 1977
T.S.D. 4200

Section M16

Socket wiring and fuseboard layout

Introduction

This section shows the destination of each cable for each plug and socket. The numbers on each socket also refer to the pin numbers in the wiring diagrams shown in previous sections.

However, note that the pin numbers shown do not necessarily correspond with the numbers moulded on the plugs & sockets.

Printed in England
© Rolls-Royce Motors Limited 1977

September 1977
T.S.D. 4200

Socket wiring and fuseboard layout

Switchbox wiring

Fig. M103

5628 Printed in England
© Rolls-Royce Motors Limited 1977
September 1977 T.S.D. 4200

S628

Components

6	Ignition warning lamp
13	Starter switch
113	Drivers lamp switch
238	Switchbox illumination
239	Oil pressure warning lamp
240	Key microswitch

Theoretical circuit

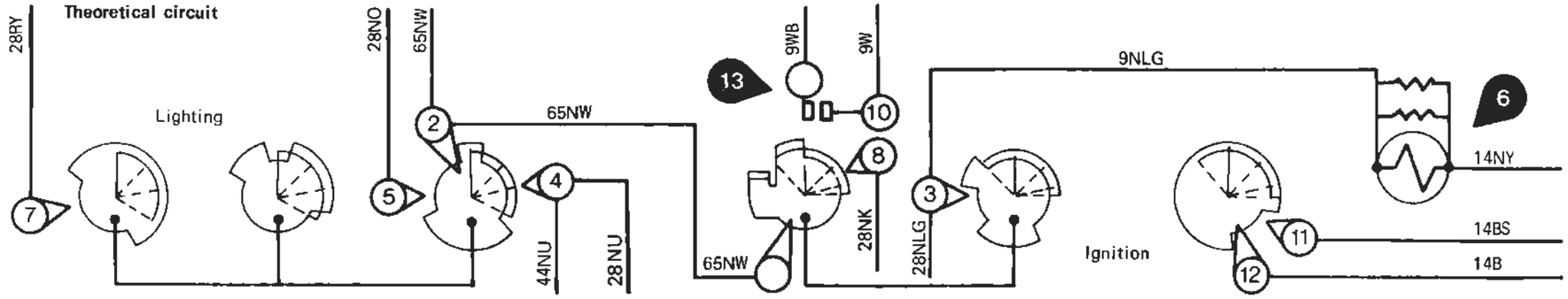

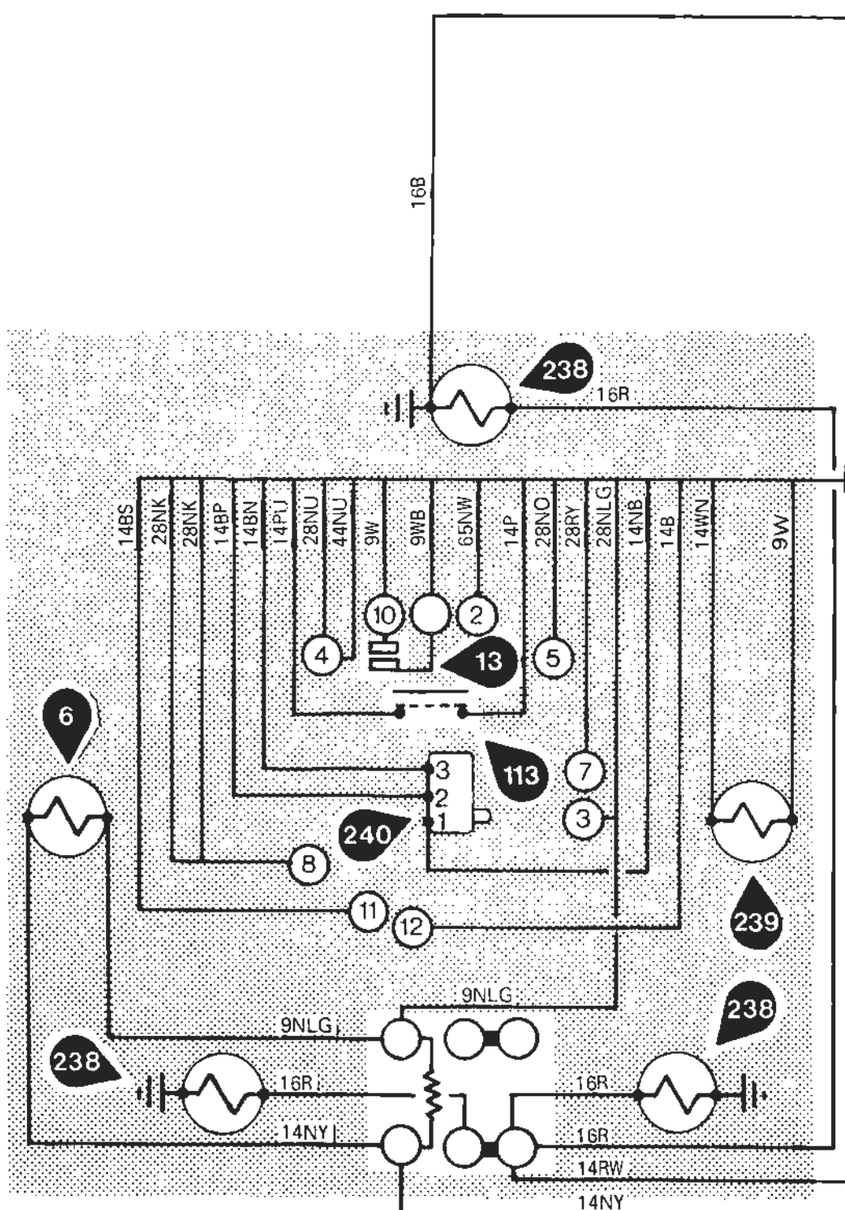

Terminal 12	14B	16B	Low coolant warning lamp
		14B	Left-hand 'A' post earth
		14B	Low coolant warning lamp
Key microswitch 1	14NB	14NB	Fuseboard A
Terminal 8	28NK	28NK	Fuseboard A
		28NK	Fuseboard A
Terminal 7	28RY	28RY	Splice S
Terminal 4	44NU	44NU	Fuseboard A
		9WB	Petrol pumps relay C1
Starter switch	9WB	9WB	Column neutral start switch
Terminal 5	28NO	28NO	Fuseboard B
		28NLG	Fuseboard B
Terminal 3	28NLG	28NLG	Fuseboard B
Key microswitch 3	14BP	14BP	Key warning relay C2
Driver's lampswitch	14PU	14PU	Left-hand body socket
Driver's lampswitch	14P	14P	Left-hand body socket
		14P	Fuseboard B
Terminal 4	28NU	28NU	Foglamp fuse
Terminal 10	9W	9W	Toeboard socket K
Oil pressure warning lamp	9W	9W	Petrol pumps relay W1
Terminal 11	14BS	14BS	Toeboard socket H
		14BN	Gear selector switch
Key microswitch 2	14BN	14BN	Toeboard socket G
Terminal 8	28NK	28NK	Fuseboard A
Terminal 2	65NW	65NW	Ammeter shunt
		14WN	Petrols pumps relay W2
Oil pressure warning lamp	14WN	14WN	ACU loom socket
		14RW	Instrument lamp dimming unit
		14NY	Toeboard socket F
		14NY	Left-hand body socket

Printed in England

© Rolls-Royce Motors Limited 1977

September 1977

T.S.D. 4200

Socket wiring and fuseboard layout

Oil check switch socket,
Panel dim socket,
Speed control socket
and diode block
Fig. M104

© Rolls-Royce Motors Limited 1977
Printed in England S638

Oil check switch socket

Oil check switch

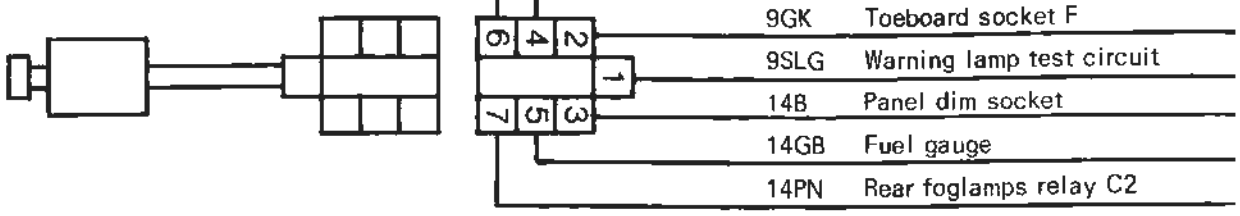

Panel dim socket

Refuel switch

Panel lamps dimmer

Panel lamps

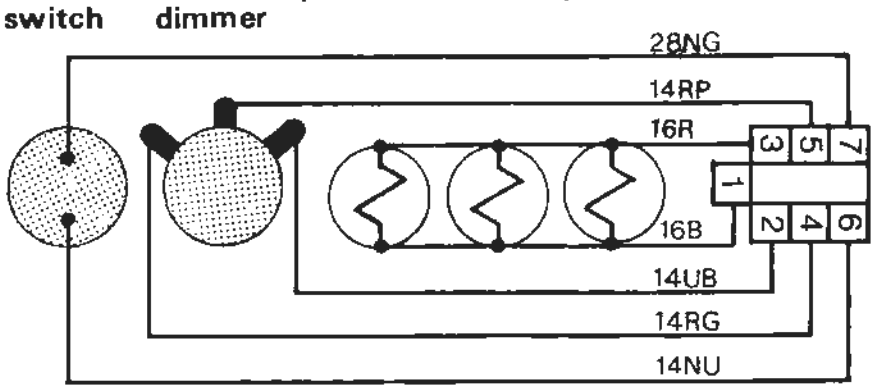

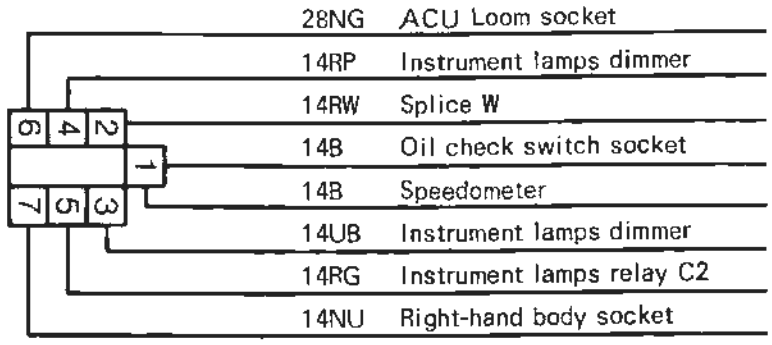

Speed control switch socket

Speed control switch

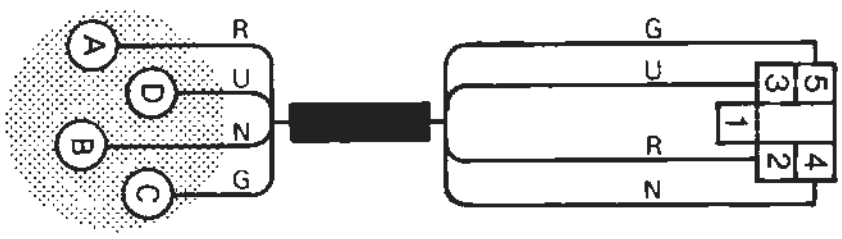

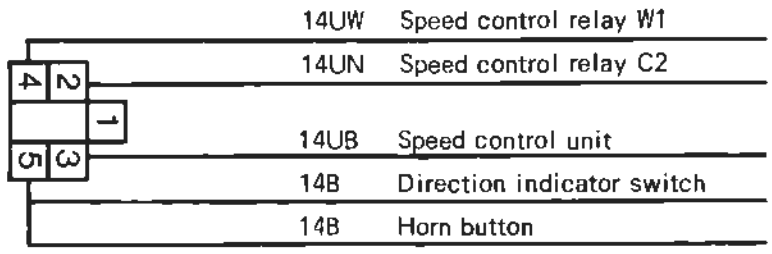

Diode block left-hand drive North America

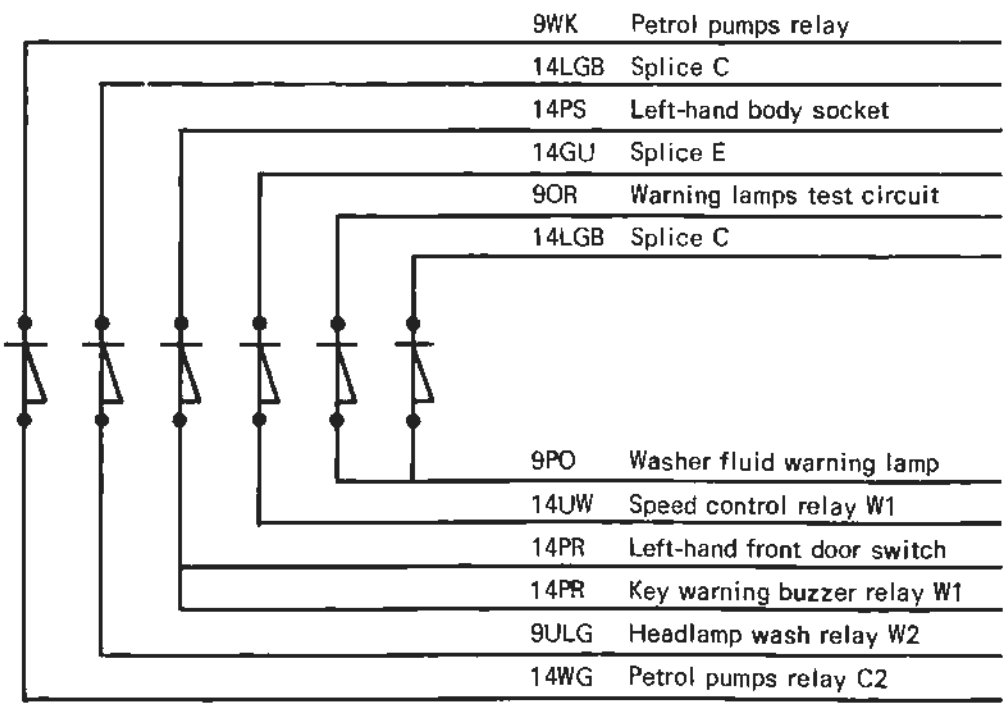

Diode block right-hand drive

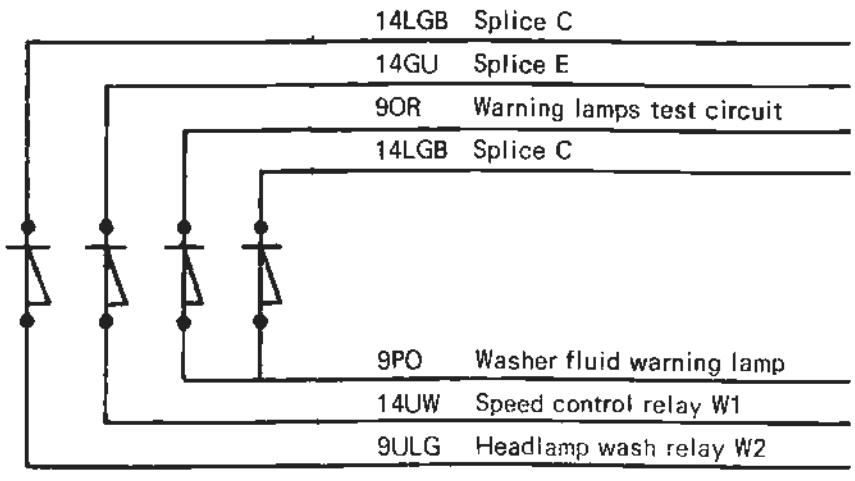

S645

Socket wiring and fuseboard layout

Splice connections
Fig. M105

Printed in England

© Rolls-Royce Motors Limited 1977

S.D. 4200 September 1977

S645

Printed in England

© Rolls-Royce Motors Limited 1977

September 1977

S.D. 4200

A

Toeboard socket M	28UG	9UG	Horn relay
		9UG	Head flash relay W2
		28UG	Head flash relay C2

B

Toeboard socket L	44UW	44UW	Toeboard socket B
Dipswitch	28UW	14UW	Main beam warning lamp

C

Toeboard socket J	14LGB	14LGB	Wiper control unit
Direction indicator switch	14LGB	14LGB	Washer fluid diode
Headlamp wash diode	14LGB		

D

Toeboard socket J	9LG	9LG	Seat loom socket
Wiper switch socket	9LG	9LG	Wiper control unit
		9LG	Headlamp wash relay C1
		9LG	Fuseboard B

E

Toeboard socket H	14GU	14GU	Speed control diode
		14GU	Speed control unit
		14GU	Speed control relay W2
		14GU	Toeboard socket A

F

Fan & compressor relay C1	44YB	44YB	Toeboard socket E
Servo isolation relay C2	14YB	14Y8	Toeboard socket E
Compressor ambient thermostat	14YB		

G

Fuseboard B	28P	14P	Toeboard socket A
Interior lamps relay W1	14P	14P	Interior lamp switch
Cubby box lamp switch	14P	14P	Right-hand front door switch
Fuseboard lamp switch	14P	14P	Right-hand body socket

H

Fan speed module	44YB	44YB	Toeboard socket E
		14YB	Lower servo socket
		14YB	ACU switch socket

J

Left-hand door socket	28BY	28BY	Right-hand door socket
Left-hand body socket	28BY	28BY	Right-hand body socket

K

Left-hand body socket	28NP	28NP	Fuseboard 'B'
Cigar lighter	28NP	28NP	Right-hand body socket
Clock	14NP		

L

Door locking solenoid	28WK	28WK	Left-hand door socket
Door locking switch	28WK		

M

Door locking solenoid	28BK	28BK	Left-hand door socket
Door locking switch	28BK		

N

Door locking solenoid	28BK	28BK	Right-hand door socket
Door locking switch	28BK		

P

Door locking solenoid	28WK	28WK	Right-hand body socket
Door locking switch	28WK		

Q

Fuseboard 'B'	28P	14P	Right-hand body socket
Interior lamps relay W1	14P	14P	Right-hand front door switch
Switchbox socket	14P	14P	Toeboard socket 'A'

R

Left-hand body socket	14P	28P	Fuseboard B
Left-hand front door switch	14P	14P	Fuseboard switch
Interior lamp switch	14P	14P	Cubby box switch

S

Foglamp fuse	14RY	28RY	Switchbox socket
Foglamp fuse	14RY	14RY	Foglamp fuse

T

Wiper switch socket	9LG	9LG	Seat loom socket
Fuseboard 'B'	9LG	9LG	Wiper control unit
		9LG	Headlamp wash relay C1

U

Seat loom plug	9LG	9LG	Right-hand seat switch
		9LG	Left-hand seat switch

V

Seat loom plug	28B	28B	Right-hand seat actuator plug
		28B	Left-hand seat actuator plug

W

Switchbox panel lamps	14RW	14RW	Outside temperature gauge
Panel dim socket	14RW	14RW	Clock
Speedometer	14RW	14RW	Cigar lighter
4 in 1 instrument	14RW	14RW	Tape player lamp
Aerial switch socket	14RW	14RW	Instrument lamps dim unit

S637
Printed In England
© Rolls-Royce Motors Limited 1977
September 1977
T.&D.J 4208

Socket wiring and fuseboard layout

Main distribution, Seat belts loom, Seat loom, Boot, Direction indicator switch and Hazard warning switch sockets
Fig. M106

© Rolls-Royce Motors Limited 1977
Printed In England

Main distribution loom socket

ACU loom

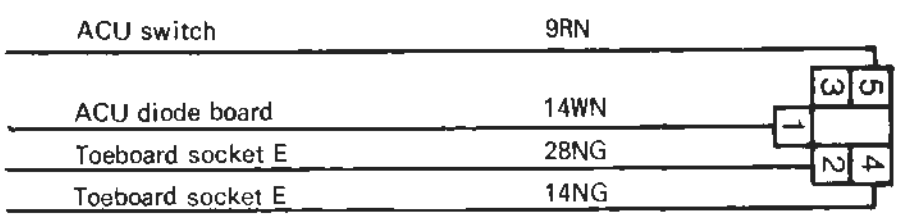

Main distribution loom

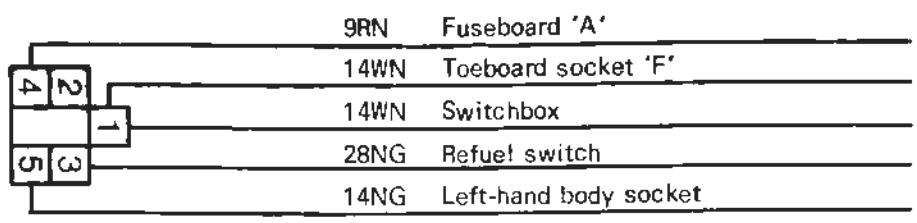

Seat belts loom socket

Seat belts loom

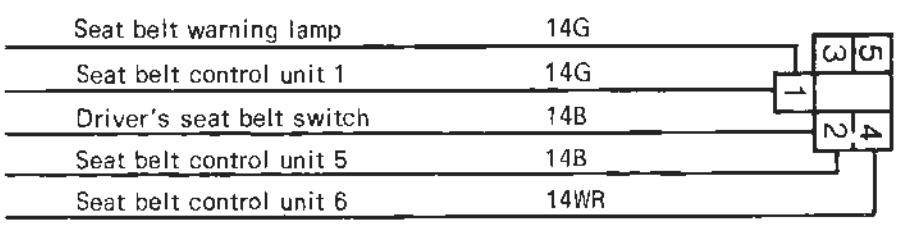

Main distribution loom

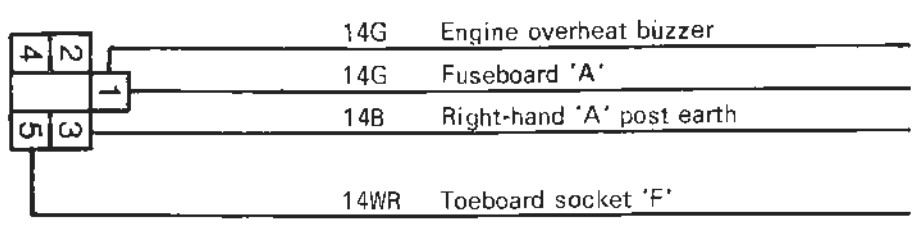

Seat loom socket

Seat loom

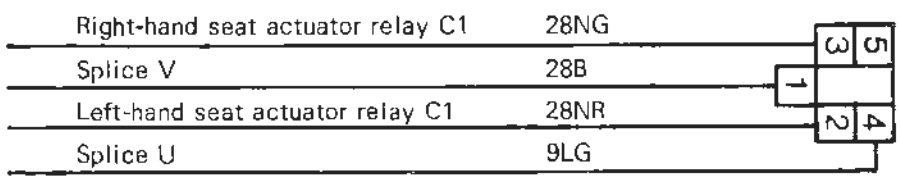

Main distribution loom

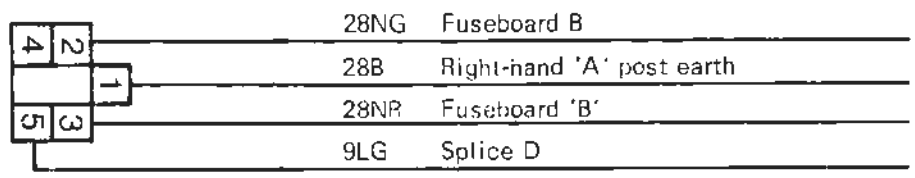

Boot socket

Boot loom

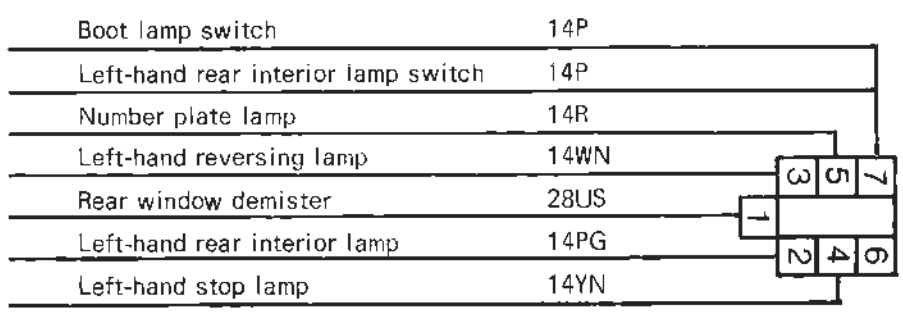

Right-hand body loom

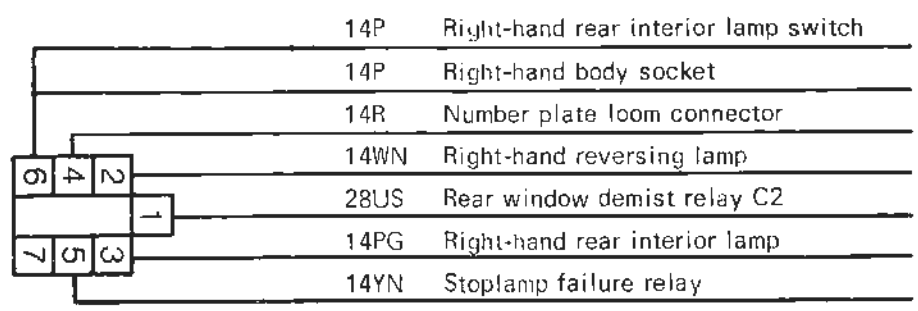

Direction indicator switch socket

Switch

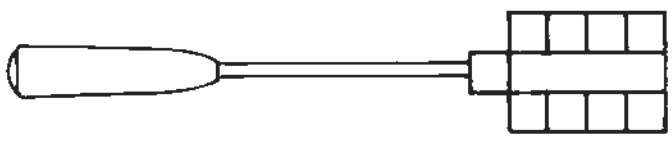

Main distribution loom

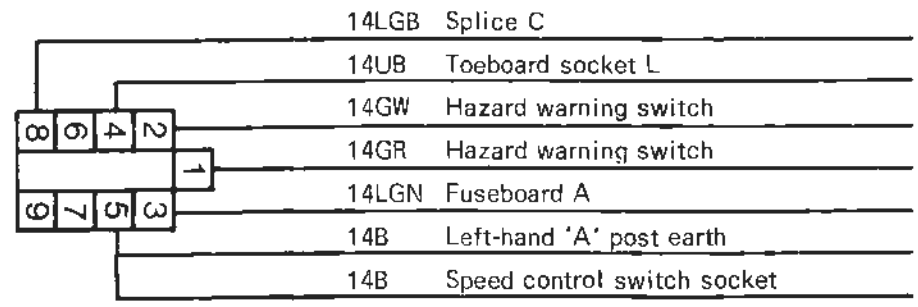

Hazard warning switch socket

Switch

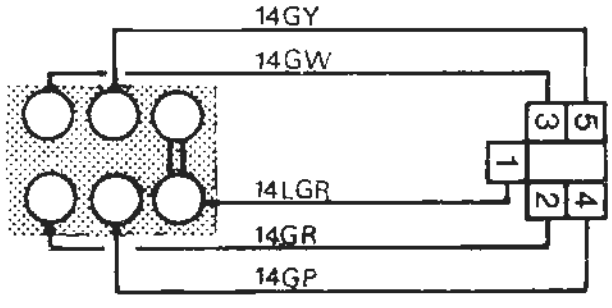

Main distribution loom

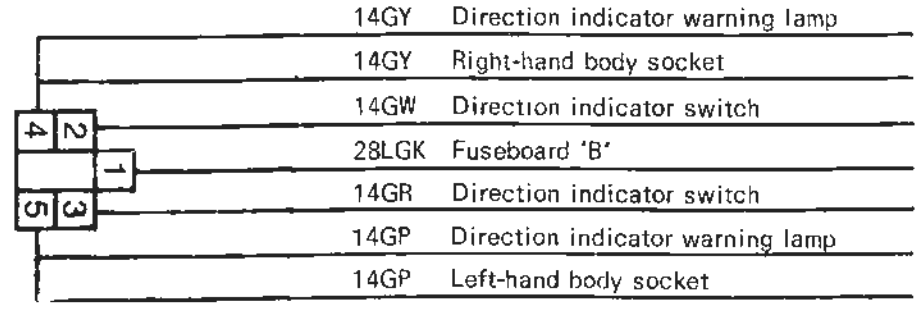

S631

Socket wiring and fuseboard layout

Left-hand door and body sockets

Right-hand drive cars

Fig. M107

Printed in England

© Rolls-Royce Motors Limited 1977

September 1977

T.S.D. 4200

 © Rolls-Royce Motors Limited 1977

Left-hand door sockets

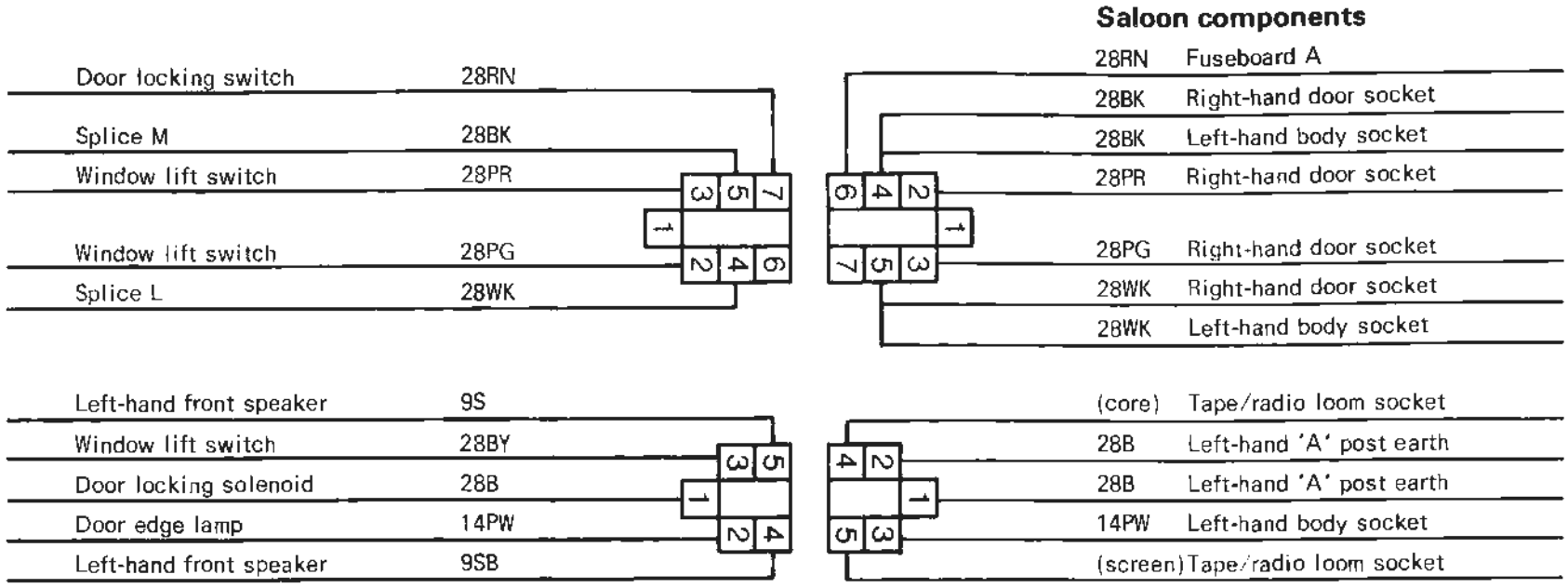

Left-hand body sockets

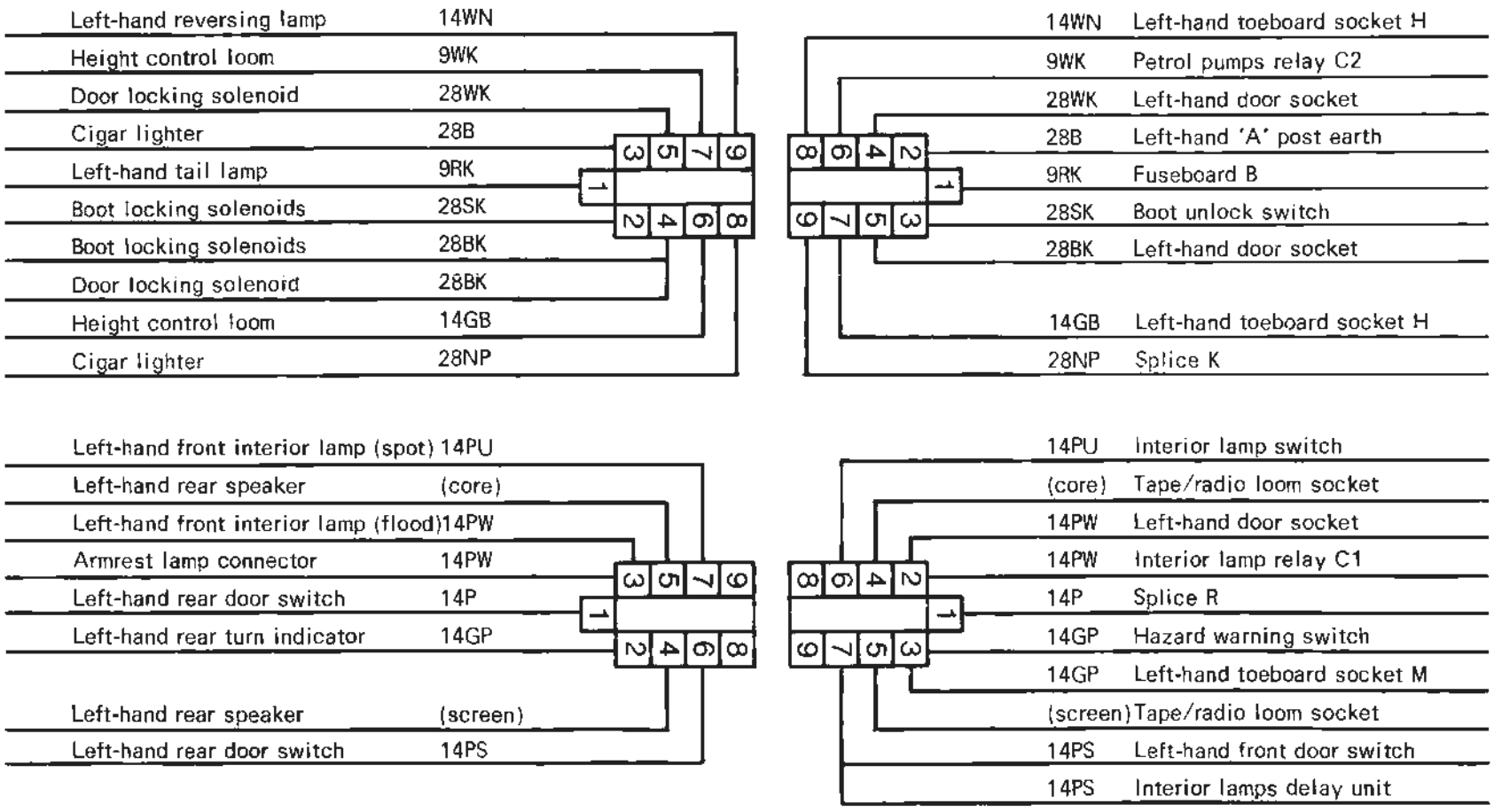

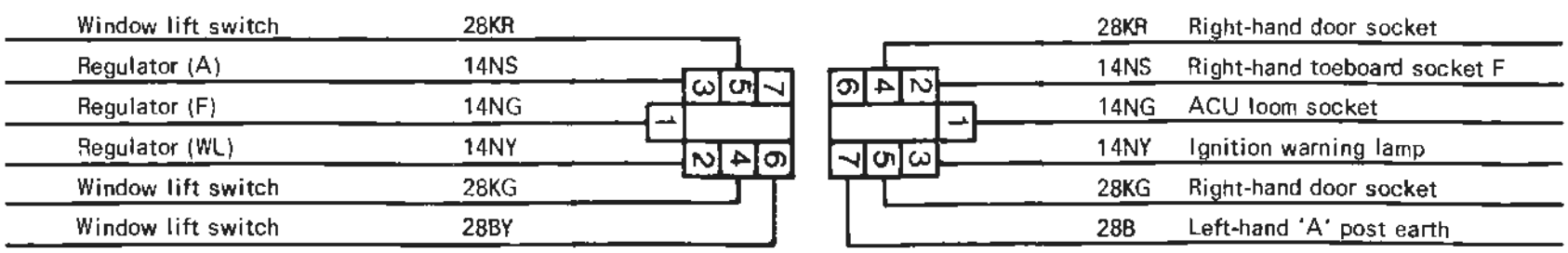

5632

Socket wiring and fuseboard layout

Right-hand door and body sockets
Right-hand drive cars
Fig. M108

Printed in England

© Rolls-Royce Motors Limited 1977

September 1977

T.S.D. 4200

 © Rolls-Royce Motors Limited 1977

Right-hand body sockets

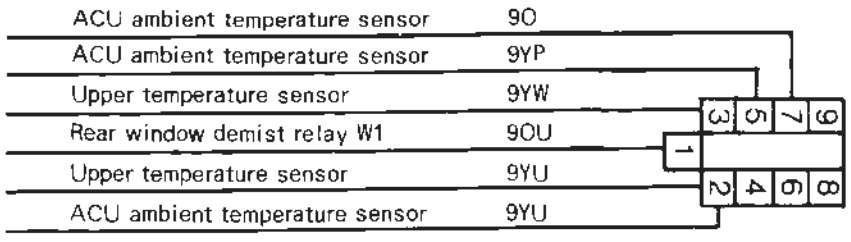

Saloon components

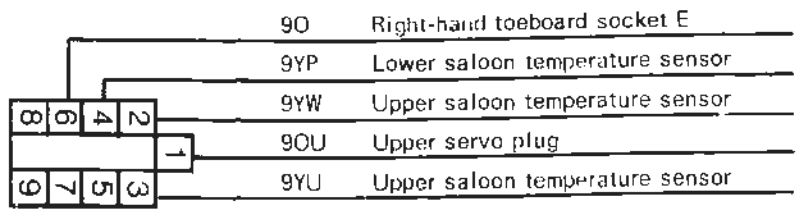

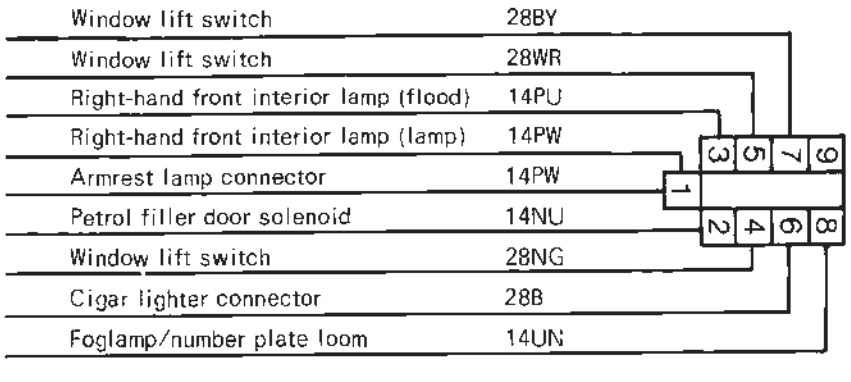

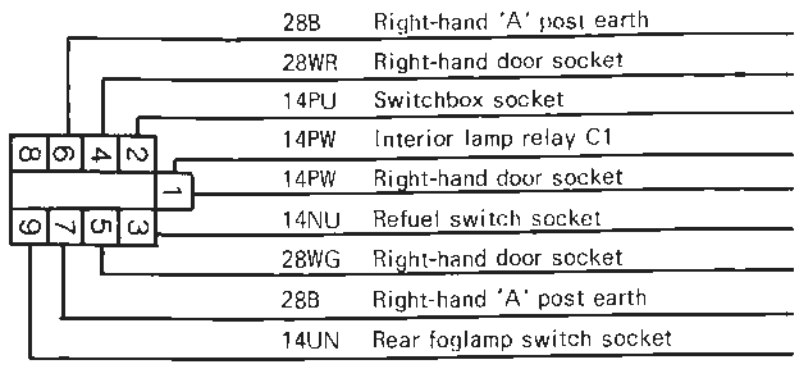

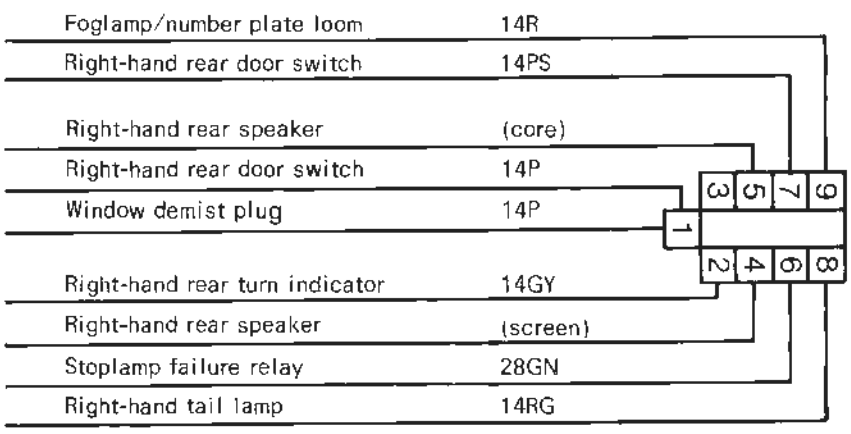

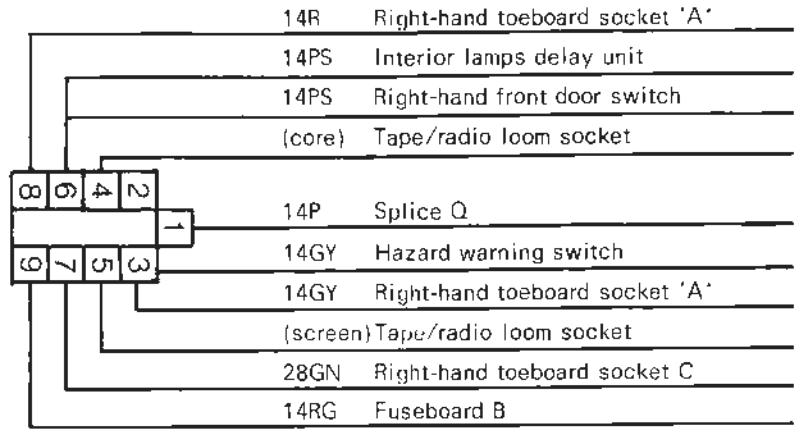

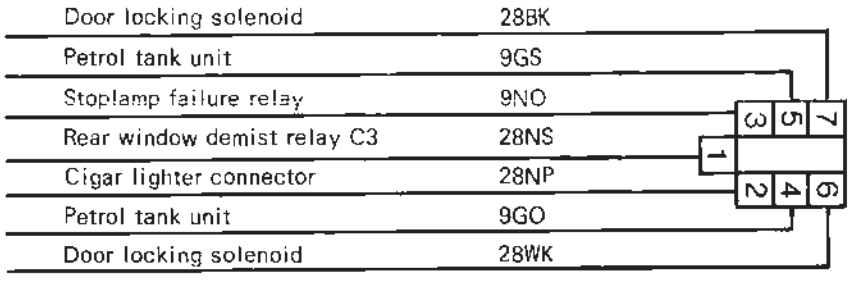

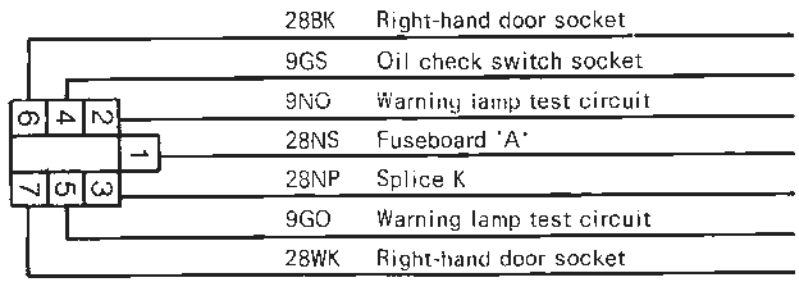

Right-hand door sockets

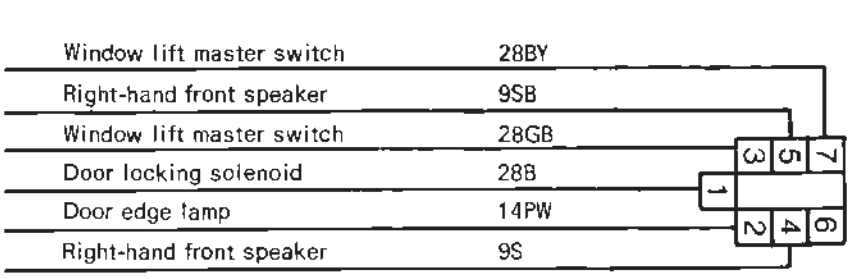

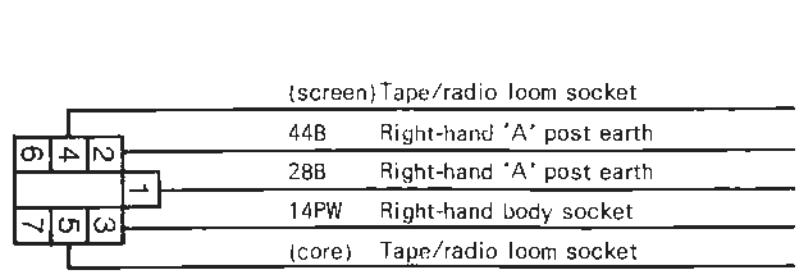

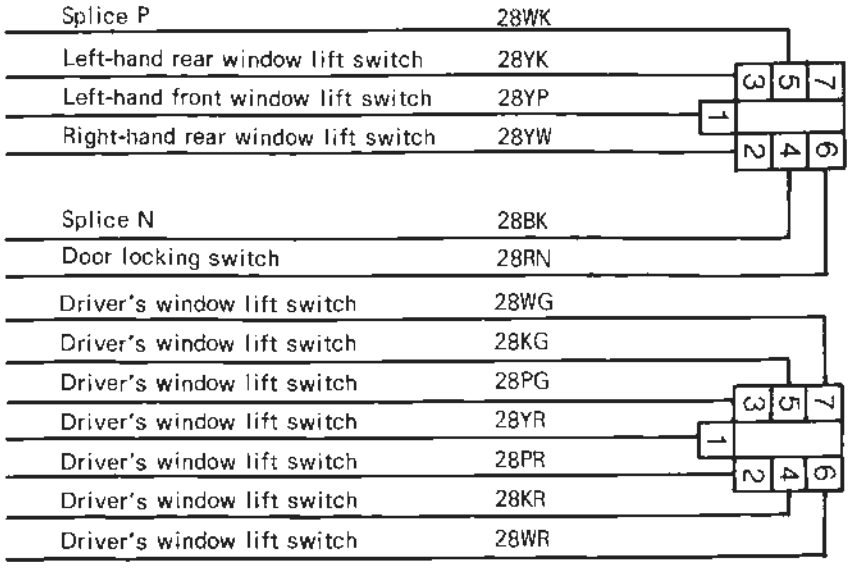

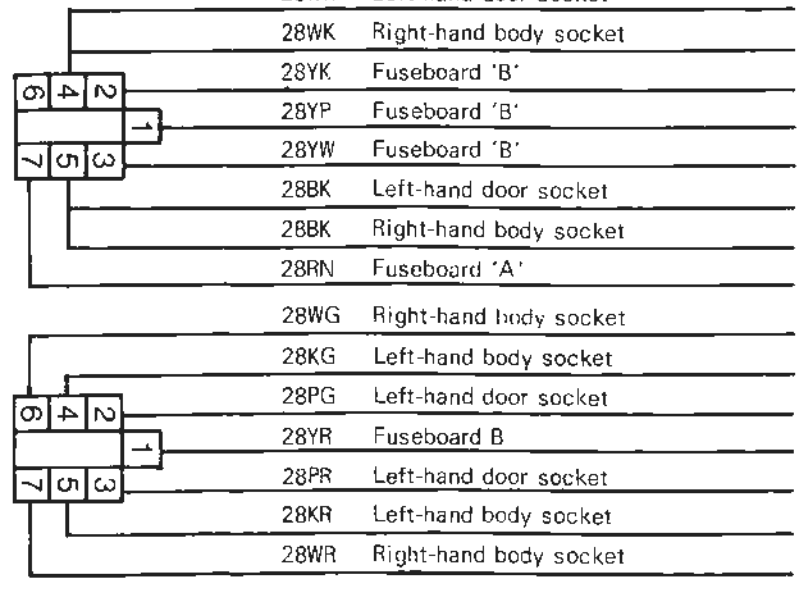

Socket wiring and fuseboard layout

Left-hand toeboard sockets
Right-hand drive cars
Fig. M109

S629
Printed in England
© Rolls-Royce Motors Limited 1977
September 1977
T.S.D. 4200

© Rolls-Royce Motors Limited 1977
Printed in England

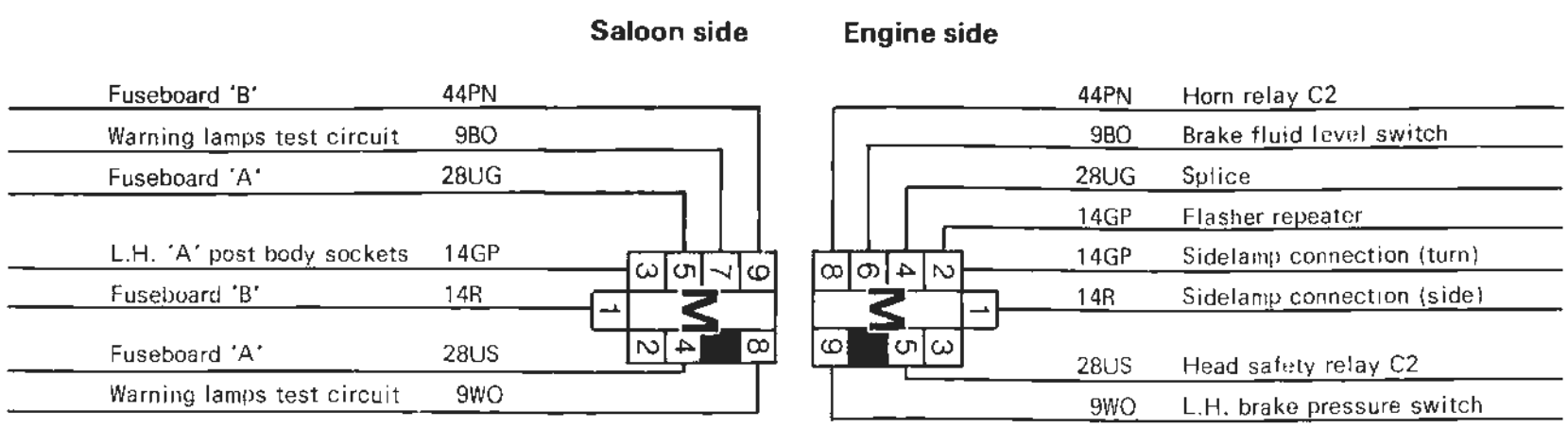

Socket wiring and fuseboard layout

Right-hand toeboard sockets

Right-hand drive cars
Fig. M110

Printed in England

© Rolls-Royce Motors Limited 1977

T.S.D. 4200 September 1977

 © Rolls-Royce Motors Limited 1977 Printed in England

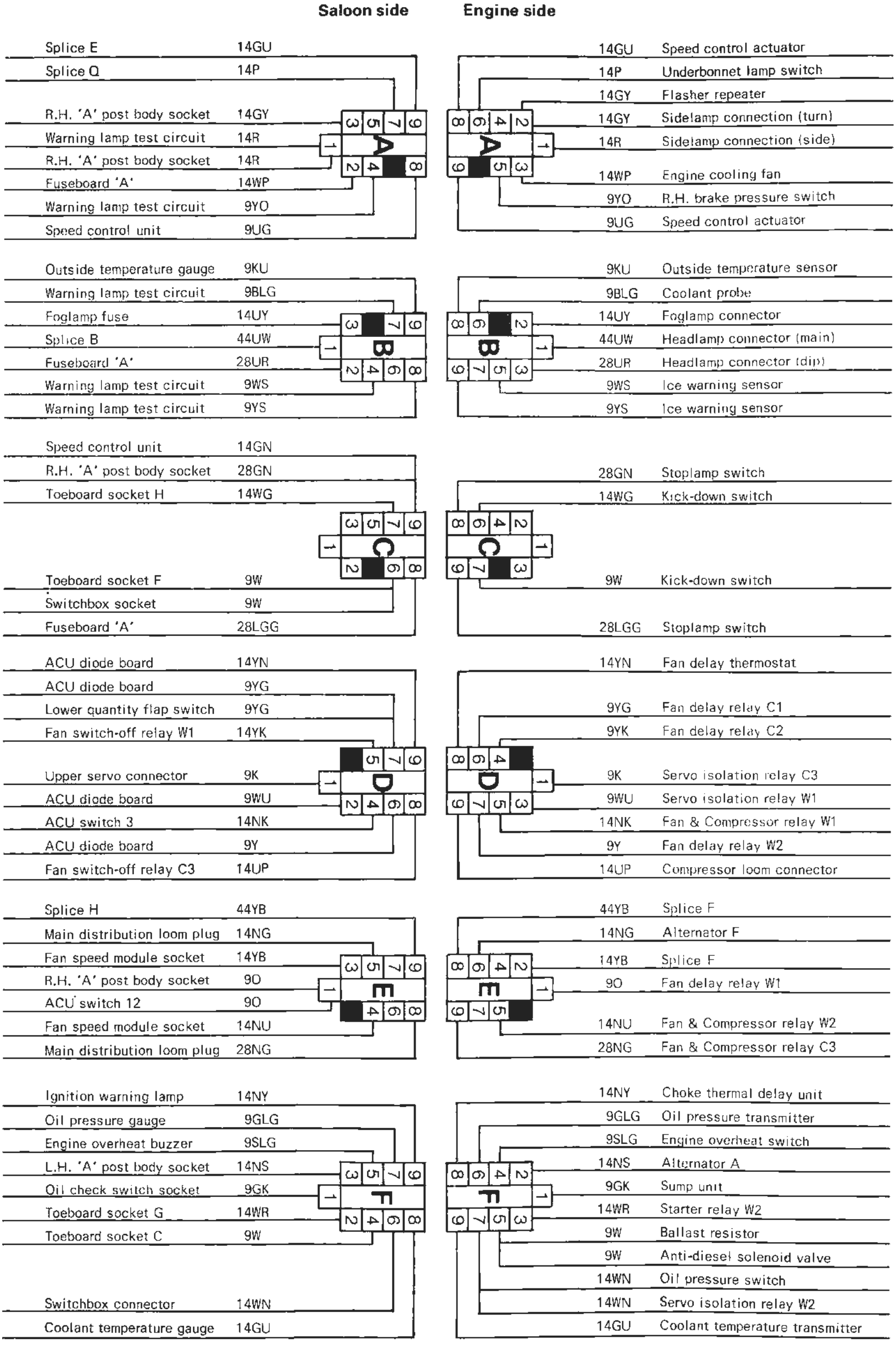

Socket wiring and fuseboard layout

Fuseboard layout

Right-hand drive cars
Fig. M111

Printed in England

© Rolls-Royce Motors Limited 1977

September 1977

T.S.D. 4200

 © Rolls-Royce Motors Limited 1977

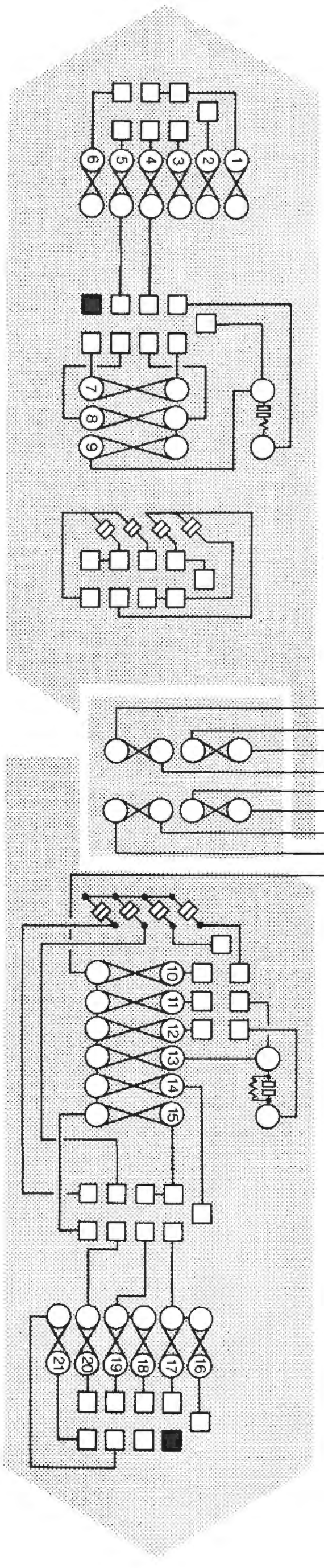

14G	Engine overheat buzzer
14G	Washer fluid level amplifier
14G	4 in 1 instrument
14G	Warning lamp test circuit
28UR	Toe board socket L
28UR	Toeboard socket B
14WP	Toeboard socket A
9RN	ACU loom socket
9W	Petrol pumps relay C3
28LGG	Toeboard socket C
14LGN	Direction indicator switch
28NK	Switchbox socket
28UK	Dipswitch
28UG	Toeboard socket M
28NS	Right-hand body socket
28NK	Switchbox socket
28NK	Switchbox socket
14LGG	Toeboard socket G
14NB	Toeboard socket G
14NB	Gearchange selector switch
14NB	Switchbox socket
28US	Toeboard socket M
14U	Headlamp wash relay W1
44U	Dipswitch
44NU	Switchbox socket
28N	Fuseboard B
28RN	Left-hand door socket
28RN	Right-hand door socket
28RN	Boot unlock switch
14PU	Rear fog lamps relay C1
14RY	Splice S
14UY	Toeboard socket L
28NU	Switchbox socket
14RY	Splice S
14UY	Toeboard socket B
14PR	Rear foglamps relay C3
14RY	Splice S
28YR	Right-hand door socket
28YP	Right-hand door socket
28NR	Seats loom socket
28NG	Seats loom socket
28NP	Splice K
28LGK	Hazard warning switch
65N	Ammeter shunt
44PN	Toeboard socket M
14P	Switchbox socket
28P	Splice K
28YK	Right-hand door socket
28YW	Right-hand door socket
28N	Fuseboard A
28NLG	Switchbox socket
28NO	Switchbox socket
14RG	Right-hand body socket
14RB	Instrument lamps relay C1
14R	Warning lamps test circuit
14R	Toeboard socket M
14GN	Aerial switch
14GN	Radio fuse
28LG	Toeboard socket K
9LG	Splice T
28NLG	Switchbox socket
9RK	Left-hand body socket
9GS	Tape/radio loom socket
14GN	Fuseboard B

Socket wiring and fuseboard layout

Left-hand door and body sockets

Left-hand drive cars
Fig. M112

S635
Printed in England
© Rolls-Royce Motors Limited 1977
T.S.D. 4200 September 1977

© Rolls-Royce Motors Limited 1977
Printed in England

Left-hand door sockets

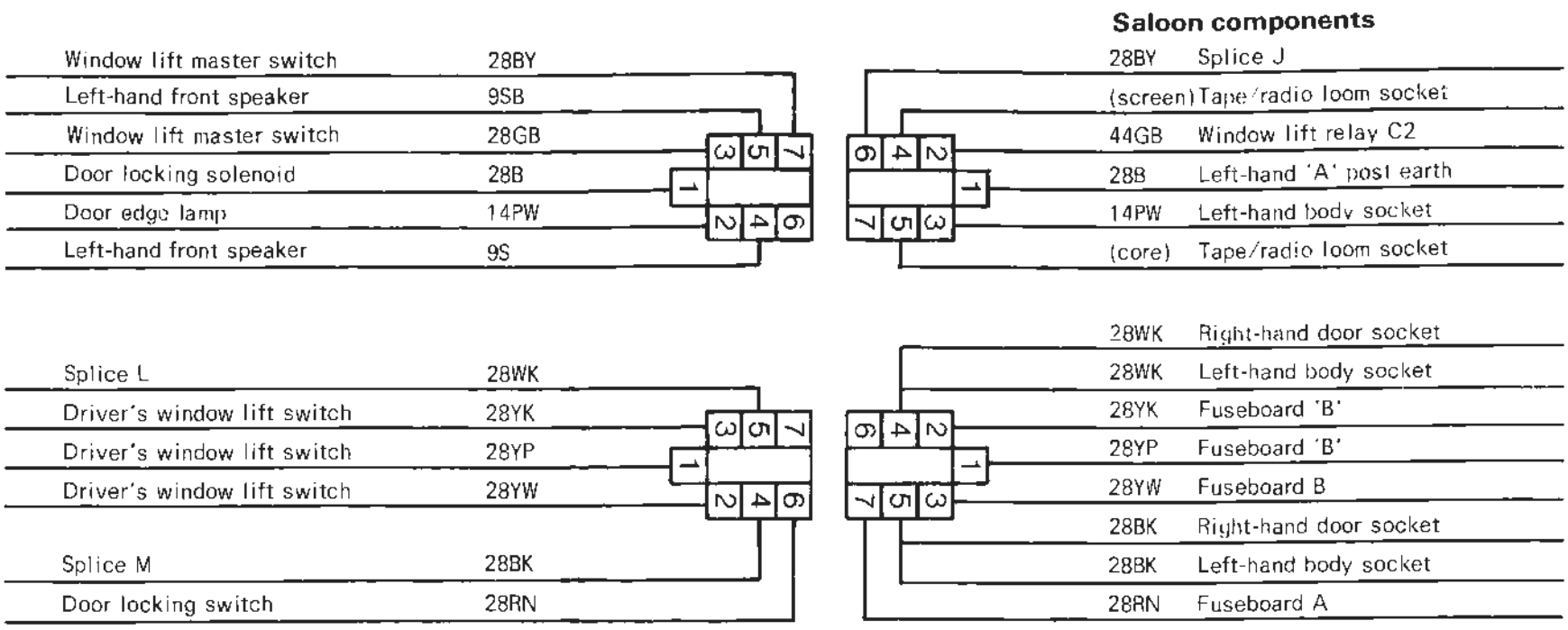

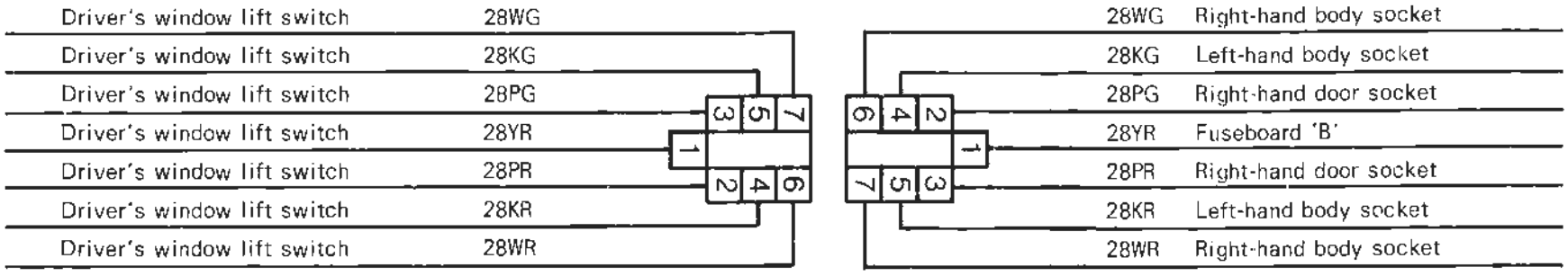

Left-hand body sockets

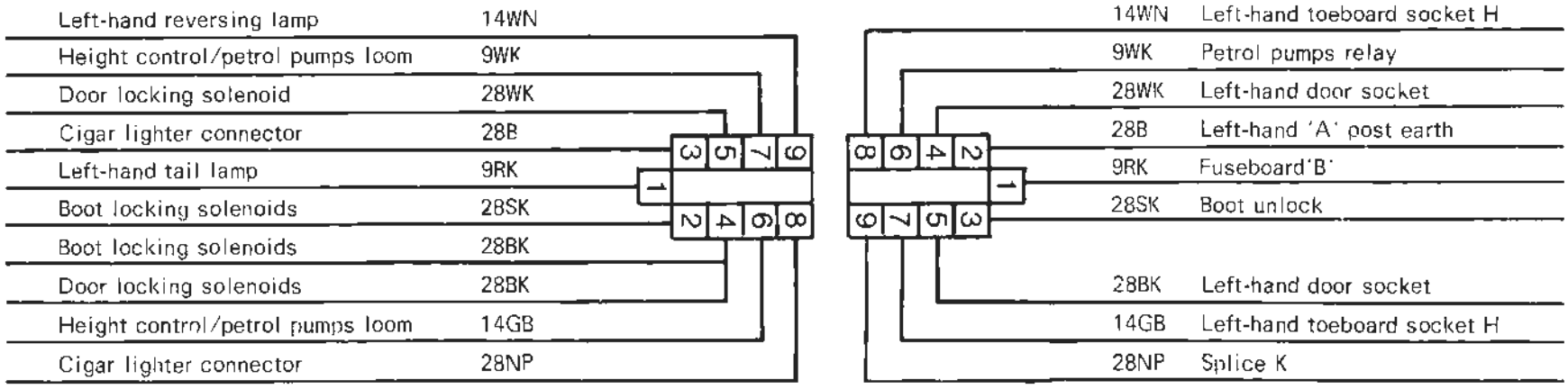

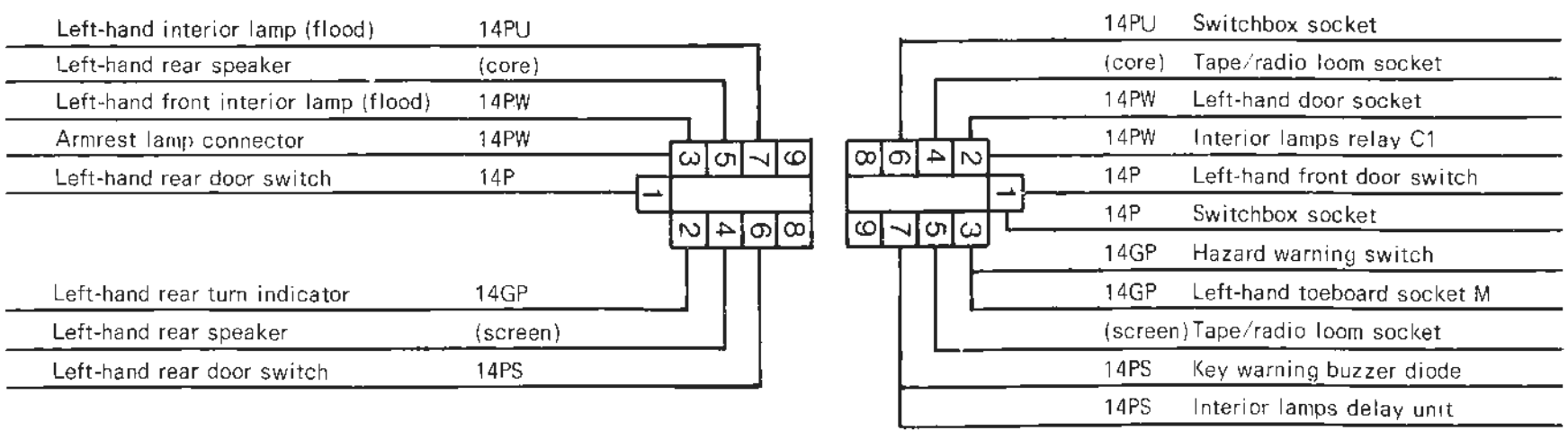

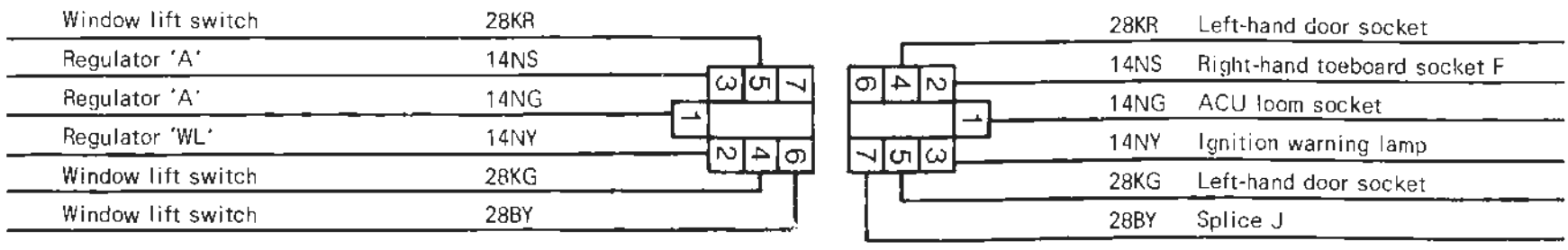

Socket wiring and fuseboard layout

Right-hand door and body sockets

Left-hand drive cars

Fig. M113

© Rolls-Royce Motors Limited 1977
Printed in England

Right-hand body sockets

Saloon components

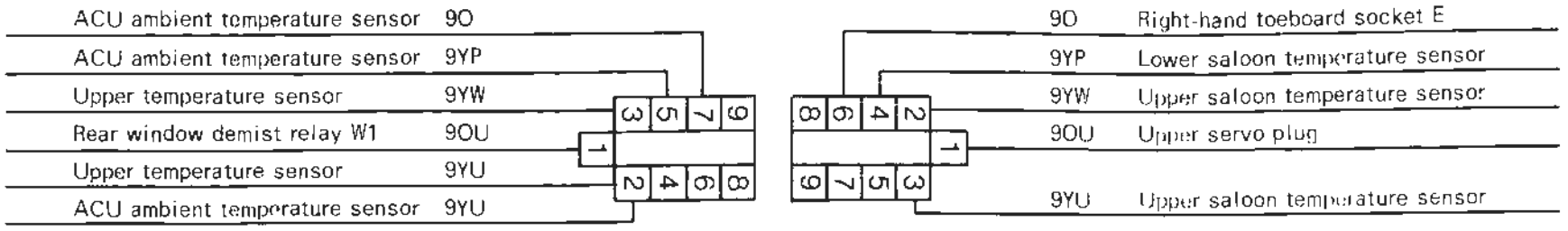

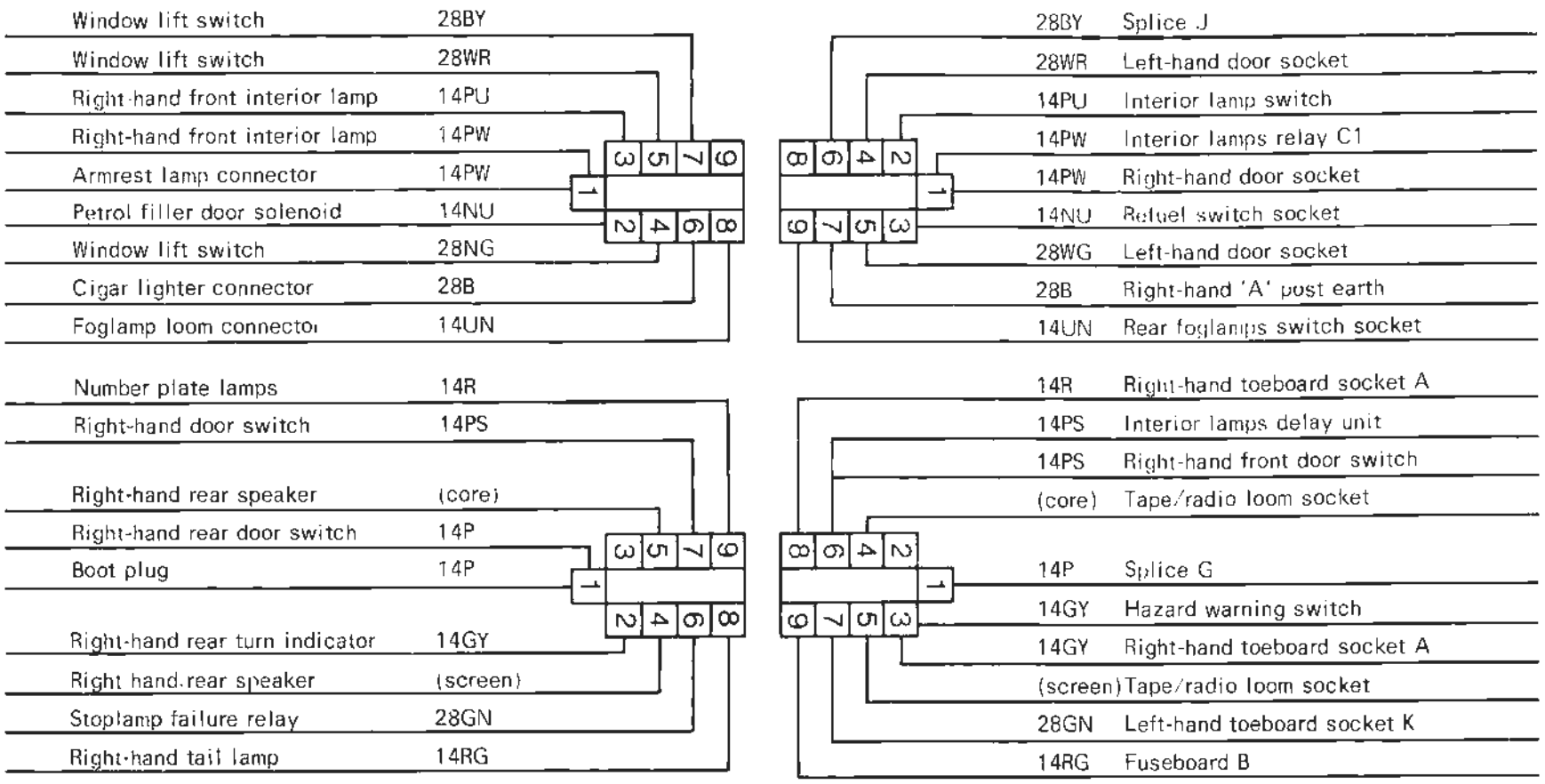

Right-hand door sockets

Socket wiring and fuseboard layout

Left-hand toeboard sockets
Left-hand drive cars
Fig. M114

 © Rolls-Royce Motors Limited 1977 Printed in England

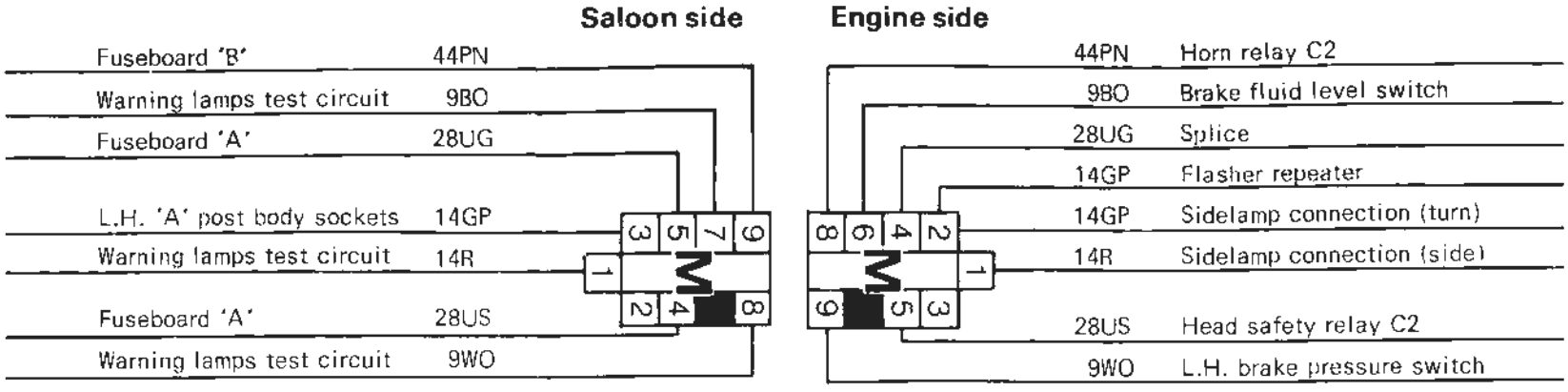

Socket wiring and fuseboard layout

Right-hand toeboard sockets
Left-hand drive cars
Fig. M115

Printed in England

© Rolls-Royce Motors Limited 1977

September 1977

T.S.D. 4200

© Rolls-Royce Motors Limited 1977
Printed in England

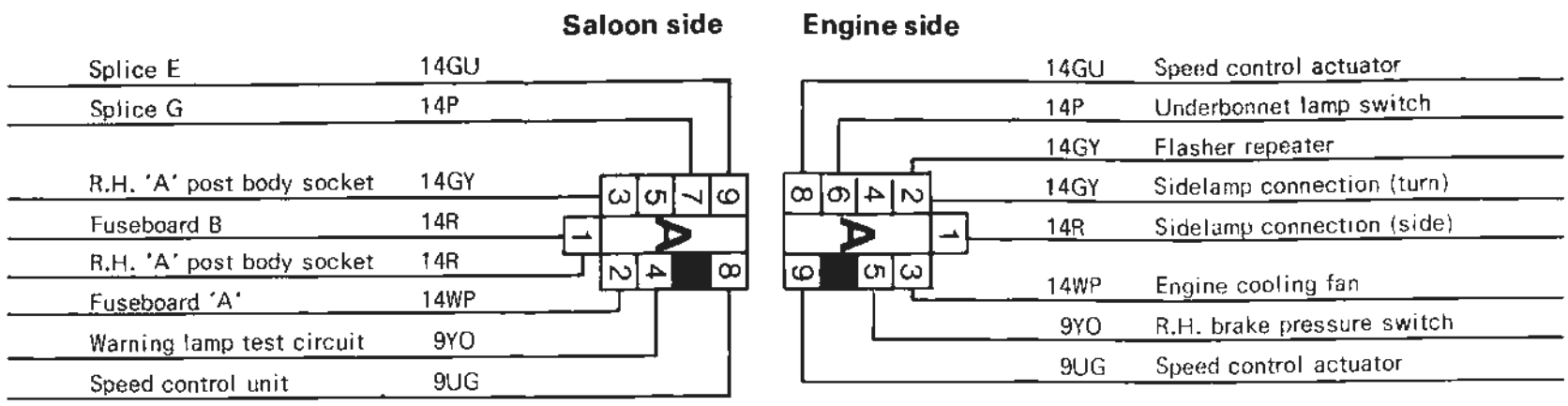

Socket wiring and fuseboard layout

Fuseboard layout
Left-hand drive cars
Fig. M116

S639
Printed in England
© Rolls-Royce Motors Limited 1977
September 1977
T.S.D. 4200

 © Rolls-Royce Motors Limited 1977 Printed in England

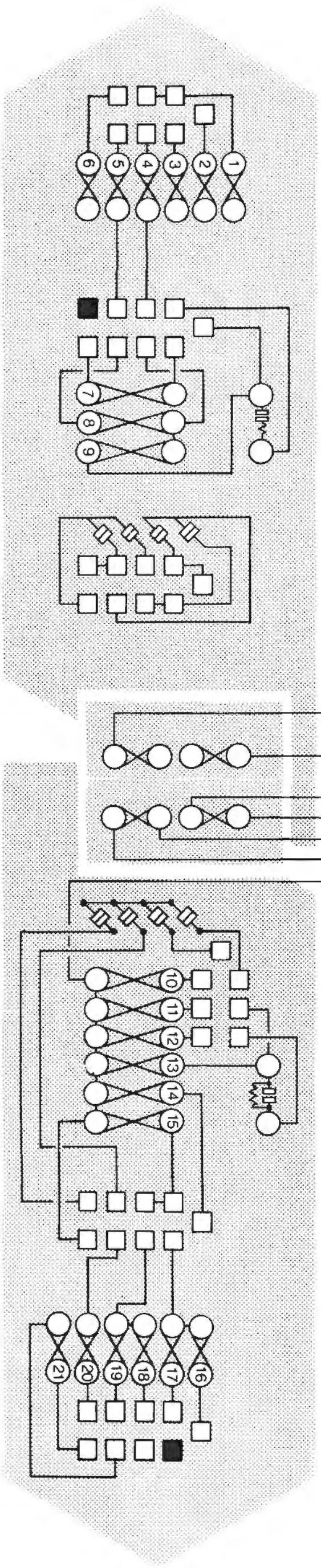

9W Petrol pump relay C3
9W Toeboard socket F
14G 4 in 1 instrument
14G Seat belt loom socket
28UR Toe board socket L
28UR Toeboard socket B
14WP Toeboard socket A
9RN ACU loom socket

28LGG Toeboard socket K
14LGN Direction indicator switch
28NK Switchbox socket
28UK Dipswitch
28UG Toeboard socket M
28NS Right-hand body socket
28NK Switchbox socket
28NK Switchbox socket

14NB Toeboard socket G
14NB Gearchange selector switch
14NB Switchbox socket
28US Toeboard socket M
14U Headlamp wash relay W1
44U Dipswitch
44NU Switchbox socket
28N Fuseboard B
28RN Left-hand door socket
28RN Right-hand door socket
28RN Boot unlock switch

14PU Rear fog lamps relay C1
28RY Splice S
14UY Toeboard socket L
28NU Switchbox socket
28RY Splice S
14UY Toeboard socket B
14PR Rear foglamps relay C3
28RY Splice S

28YR Left-hand door socket
28YP Left-hand door socket
28NR Seats loom socket
28NG Seats loom socket
28NP Splice K
28LGK Hazard warning switch

65N Ammeter shunt

44PN Toeboard socket M
14P Switchbox socket
28P Splice G
28YK Left-hand door socket
28YW Left-hand door socket
28N Fuseboard A
28NLG Switchbox socket
28NO Switchbox socket

14RG Right-hand body socket
14RB Instrument lamps relay C1
14R Warning lamps test circuit
14R Toeboard socket A
14GN Instrument lamps relay W1
14GN Radio fuse
28LG Toeboard socket C
9LG Splice D
28NLG Switchbox socket
9RK Left-hand body socket

9GS Tape/radio loom socket
14GN Fuseboard B

Section M 17

Headlamps, foglamps and bulbs

Headlamps

Lamp units that are marked with a '1', '1A' or '1E' on the lens are fitted to the inner lamps and lamp units marked with a '2', '2A' or '2E' are fitted to the outer lamps. Yellow lenses are fitted to cars destined for Algeria and France.

Cars destined for right-hand drive countries.

Silver Shadow II and Silver Wraith II		
Inner lamps	12v75w(or 50w)	Sealed beam
Outer lamps	12v37½/60w	Sealed beam
Camargue and Corniche		
Inner lamps	12v75w(or 50w)	Sealed beam
Outer lamps	12v37½/60w	Sealed beam

Cars destined for left-hand drive countries except Belize, Canada, Sweden and U.S.A.

Inner and outer lamps	12v50w	Quartz halogen bulb

Cars destined for Belize, Canada and U.S.A.

Inner lamps	12v37½w	Sealed beam
Outer lamps	12v37½/50w	Sealed beam

Cars destined for Sweden

Inner and outer lamps	12v45/40w	Bulb

Foglamps

Yellow lenses are fitted to the front foglamps on cars destined for Algeria and France.

Front lamps	12v55w	Quartz halogen with special fitting
Rear lamps	12v21w	SCC bayonet

Bulbs

Silver Shadow II, Silver Wraith II and Corniche

Sidelamps	12v5w	S.C.C. bayonet
Side markers	12v3w	Capless
Direction indicators	12v21w	S.C.C. bayonet
Reversing lamps	12v21w	S.C.C. bayonet
Rear fog lamps	12v21w	S.C.C. bayonet
Direction indicator repeaters	12v4w	M.C.C. bayonet
Stop/tail lamps	12v21/5w	S.B.C. bayonet
Luggage compartment lamp	12v5w	M.C.C. bayonet
Under bonnet lamp	12v5w	Double-ended festoon
Number plate lamps - All countries except Canada and U.S.A.	12v4w	M.C.C. bayonet
Canada and U.S.A. only	12v5w	Double-ended festoon
Cubby box lamp	12v5w	Double-ended festoon
Clock illumination	12v3w	Capless
Outside air temperature gauge illumination	12v2w	Bayonet
4-in-1 gauge illumination	12v3w	Capless
Speedometer illumination	12v3w	Capless
Direction indicator warning lamps	12v3w	Capless
Main beam warning lamp	12v3w	Capless
Switchbox illumination	12v1.5w	L.E.S.
Ignition warning lamp	12v2w	Bayonet
Oil pressure warning lamp	12v2w	Bayonet
Warning panel (10 bulbs)	12v3w	Capless
Seat belt warning lamps	12v3w	Capless
Front foglamps warning lamp	12v2w	Bayonet
Rear foglamps warning lamp	12v3w	Capless
Side lamps warning lamp	12v2w	Bayonet
Switch illumination	12v1.5w	L.E.S.
Cigar lighter illumination	12v2.2w	M.C.C. bayonet
Tape access illumination	12v1.5w	L.E.S.
Fuseboard illumination	12v3w	Capless
Gear range indicator illumination	14v0.56w	L.E.S.
Driver's roof lamps (both sections)	12v5w	Double-ended festoon
Passenger's roof lamps Front section	12v4w	M.C.C. bayonet
Rear section	12v5w	Double-ended festoon
Door open warning lamp	12v3w	Capless
Door step lamp	12v3w	Capless

Printed in England
© Rolls-Royce Motors Limited 1977
September 1977
T.S.D. 4200

Camargue		
Front direction indicators (except Italy)	12v21w	S.C.C. bayonet
Front direction indicator/side lamps (Italy)	12v21/5w	S.B.C. bayonet
Rear direction indicators	12v21w	S.C.C. bayonet
Side lamps (except Italy)	12v5w	S.C.C. bayonet
Side markers - front	12v3w	Capless
Side markers - rear	12v4w	M.C.C. bayonet
Direction indicator repeaters	12v5w	Capless
Cornering lamps	12v21w	S.C.C. bayonet
Tail lamps	12v5w	S.C.C. bayonet
Stop lamps	12v21w	S.C.C. bayonet
Number plate lamps	12v5w	Double-ended festoon
Reversing lamp	12v21w	S.C.C. bayonet
Luggage compartment lamp	12v5w	Double-ended festoon
Under bonnet lamp	12v5w	Double-ended festoon
Ammeter illumination	12v3w	Capless
Clock illumination	12v3w	Capless
Cubby box lamp	12v5w	Double-ended festoon
Fog lamps warning lamp	12v2w	Bayonet
Fuel gauge illumination	12v3w	Capless
Fuseboard illumination	12v3w	Capless
Hazard warning lamp	14v0.56w	L.E.S. screw
Air temperature gauge illumination	12v2w	Bayonet
Speedometer illumination	12v3w	Capless
Direction indicator warning lamps	12v3w	Capless
Main beam warning lamp	12v3w	Capless
Side lamps warning lamp (Italy)	12v2w	Bayonet
Switch illumination	12v1.5w	L.E.S. screw
Switchbox illumination	12v1.5w	L.E.S. screw
Ignition warning lamp	12v2w	Bayonet
Oil pressure warning lamp	12v2w	Bayonet
Warning panel bulbs (12off)	12v3w	Capless
Gear range indicator illumination	14v0.56w	L.E.S. screw
Cigar lighter illumination	12v2.2w	M.C.C. bayonet
Driver's roof lamp - both sections	12v5w	M.C.C. bayonet
Passenger's roof lamp - front section	12v4w	M.C.C. bayonet
Passenger's roof lamp - rear section	12v5w	Double-ended festoon
Door mounted step lamp	12v3w	Capless
Door open warning lamp	12v3w	Capless

S 245

Printed in England

© Rolls-Royce Motors Limited 1977

February 1977

T.S.D. 4200

Chapter N

Steering system

Section

N1 Rack and pinion unit
N2 Steering pump (Saginaw)
N3 Steering wheel and Gear range selector unit
N4 Steering column
N5 Steering linkage
N6 Fault diagnosis
N7 Workshop tools

Chapter N

Issue record sheet 1

April 1980

The dates quoted below refer to the issue date of individual pages within this chapter.

Section	Fold out	N1	N2	N3	N4	N5	N6	N7
Page No.								
1	May 78	Apr 80	Mar 80	Mar 80	Mar 78	Mar 78	Feb 77	Dec 78
2	Mar 78	Apr 80	Mar 80	Mar 80	Mar 78	Mar 78	Feb 77	
3		Oct 78	Apr 77	Nov 79	May 78		Aug 77	
4		Oct 78	Apr 77	Nov 79	May 78		Aug 77	
5		Oct 78	Apr 77	Dec 79				
6		Oct 78	Apr 77	Dec 79				
7		Oct 78	Mar 80					
8		Oct 78	Mar 80					
9		Oct 78						
10								
11								
12								
13								
14								
15								
16								
17								
18								
19								
20								
21								
22								
23								
24								
25								
26								
27								
28								
29								
30								
31								
32								
33								
34								
35								
36								
37								
38								
39								
40								
41								
42								
43								
44								
45								
46								
47								
48								

Printed in England

© Rolls-Royce Motors Limited 1980

Steering unit

Rolls-Royce and Bentley Corniche
Prior to car serial number DRH 32633
Rolls-Royce Camargue
Prior to car serial number JRX 32035

Printed in England

© Rolls-Royce Motors Limited 1978

March 1978

T.S.D. 4200

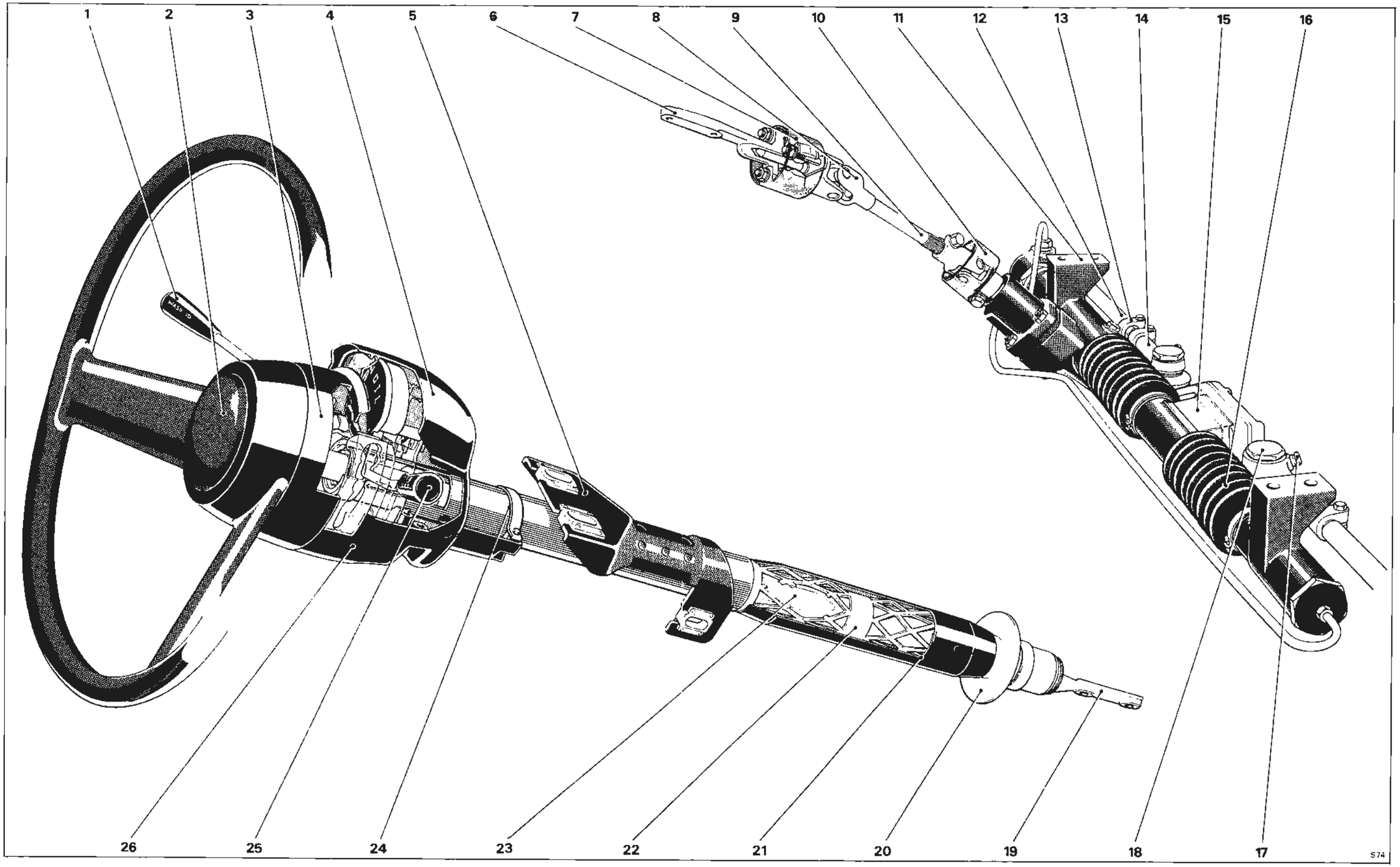

Fig. N2 Steering column with rack and pinion unit

1 Direction indicator, headlamp flasher and windscreen washer switch
2 Horn button
3 Hub assembly
4 Upper cowl
5 Upper steering column fixing
6 Upper link
7 Bonded coupling, safety stalk and heatshield
8 Upper universal joint
9 Intermediate link
10 Lower universal joint and heatshield
11 Mounting bracket
12 Outer track rod
13 Pinch bolt
14 Inner track rod
15 Spacer block and centre seal
16 Convoluted seal
17 Grease nipple
18 Track rod inner ball pin unit
19 Lower extension
20 Toe-board plate
21 Plastic outer cover
22 Collapsible metal mesh
23 Inner column
24 Rear clip, lower cowl
25 Gear range selector lever and automatic speed control system switches
26 Lower cowl

Steering unit

Rolls-Royce Silver Shadow II,
Silver Wraith II and Bentley T2
Rolls-Royce and Bentley Corniche
From car serial number DRH 32633
Rolls-Royce Camargue
From car serial number JRX 32035

Printed in England

© Rolls-Royce Motors Limited 1978

May 1978

T.S.D. 4200

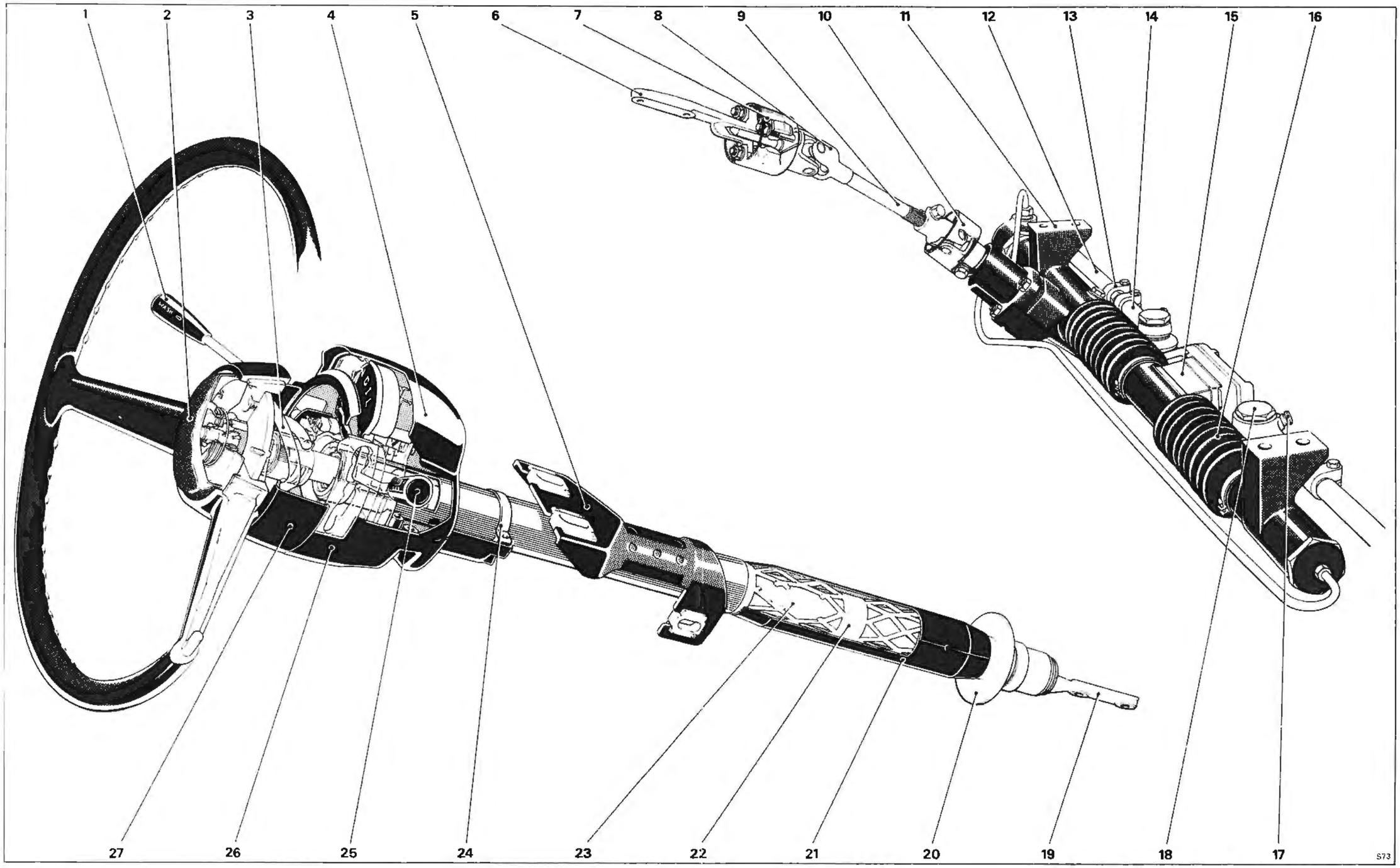

Fig. N1 Steering column with rack and pinion unit

1 Direction indicator, headlamp flasher and windscreen washer switch
2 Horn button
3 Energy absorbing device
4 Upper cowl
5 Upper steering column fixing
6 Upper link
7 Bonded coupling, safety stalk and heat shield
8 Upper universal joint
9 Intermediate link
10 Lower universal joint and heatshield
11 Mounting bracket
12 Outer track rod
13 Pinch bolt
14 Inner track rod
15 Spacer block and centre seal
16 Convoluted seal
17 Grease nipple
18 Track rod inner ball pin unit
19 Lower extension
20 Toe-board plate
21 Plastic outer cover
22 Collapsible metal mesh
23 Inner column
24 Rear clip, lower cowl
25 Gear range selector lever and automatic speed control system switches
26 Lower cowl
27 Collar

Section N1

Rack and pinion unit

Introduction

The steering unit is a rack and pinion power assisted mechanism with centre connection to solid bar track rods. Toe-in can be set by the movement of an intermediate adjuster linking the track rod inner and outer components. An anti-joggle valve is fitted into the hydraulic pressure line, located in the spool valve housing, to minimise any feedback caused by external force on the rack in the opposite direction to that steered.

When assembling a steering unit, it must be noted that the main tube and end cap on the pinion box side of the unit are not interchangeable with similar components fitted to cars built to the earlier specification.

Reference must be made to Page N1 - 10 for car serial numbers applicable to this modification.

On later cars the steering rack is fitted with internal lock stops and all lock stop packings

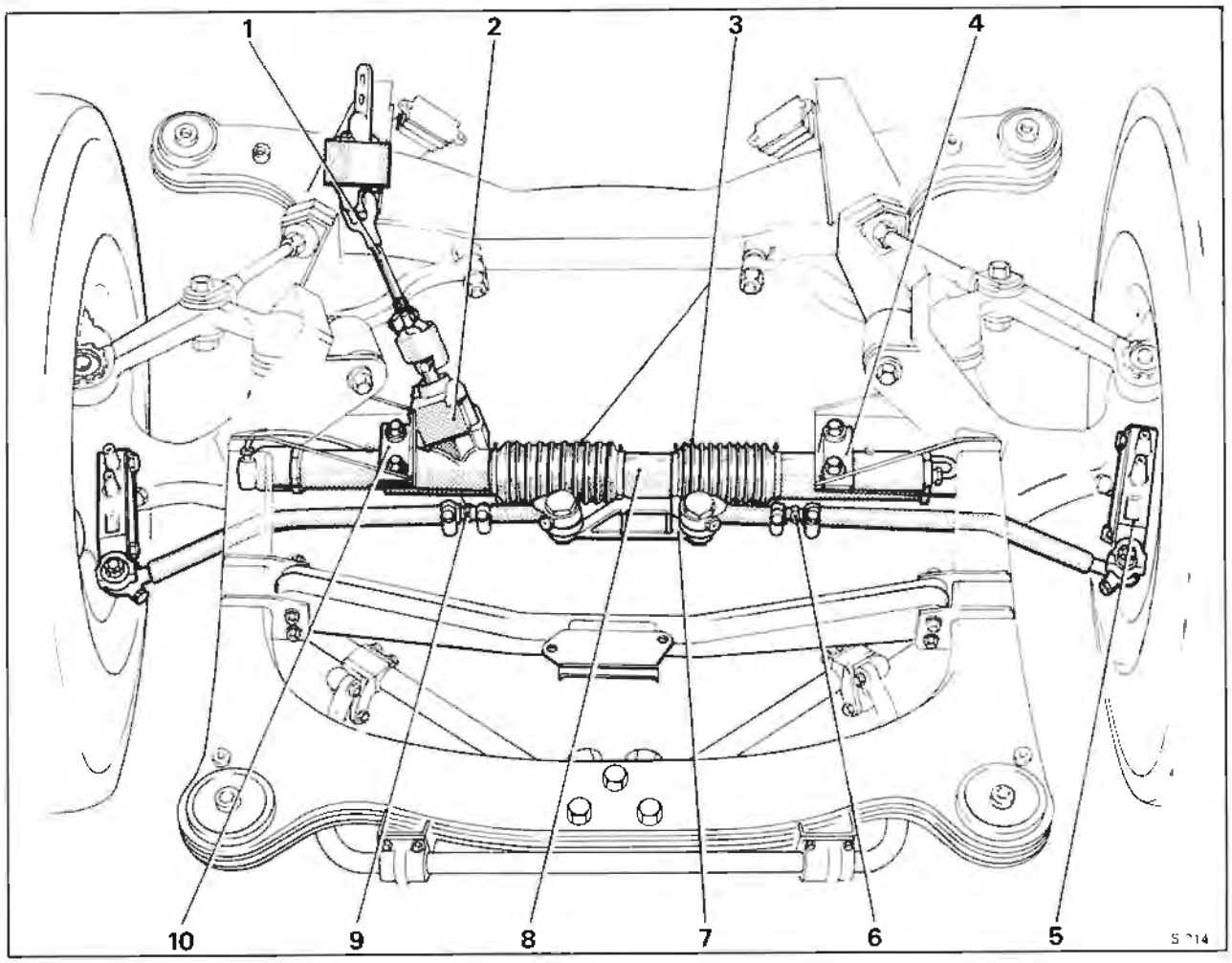

Fig. N3 Steering unit mounted in sub-frame

1 Intermediate link
2 Spool valve and pinion
3 Convoluted seals
4 Steering to sub-frame attachment
5 Side steering lever
6 Track rod adjuster
7 Inner ball joint bracket
8 Centre tube and seal
9 Track rod adjuster
10 Steering to sub-frame attachment

Printed in England
© Rolls-Royce Motors Limited 1980
April 1980
T.S.D. 4200

removed from the front triangle levers. Details are given in Chapter H Section H5.

Power assistance
Pressure is applied to the steering system rack in varying degrees to provide assistance at the steering wheel, dependent on the effort required to move the road wheels.

The degree of assistance is controlled by the passage or restriction of oil through a series of ports in the upper half of the pinion box creating a pressure differential, across the rack, proportional to the load applied at the steering wheel.

The system operates by causing a small torsion bar to twist, immediately the steering wheel is moved, rotating the concentric valve components to provide the pressure differential required. A 'fail safe' device prevents the torsion bar from being overstressed, by limiting the number of degrees through which it can twist.

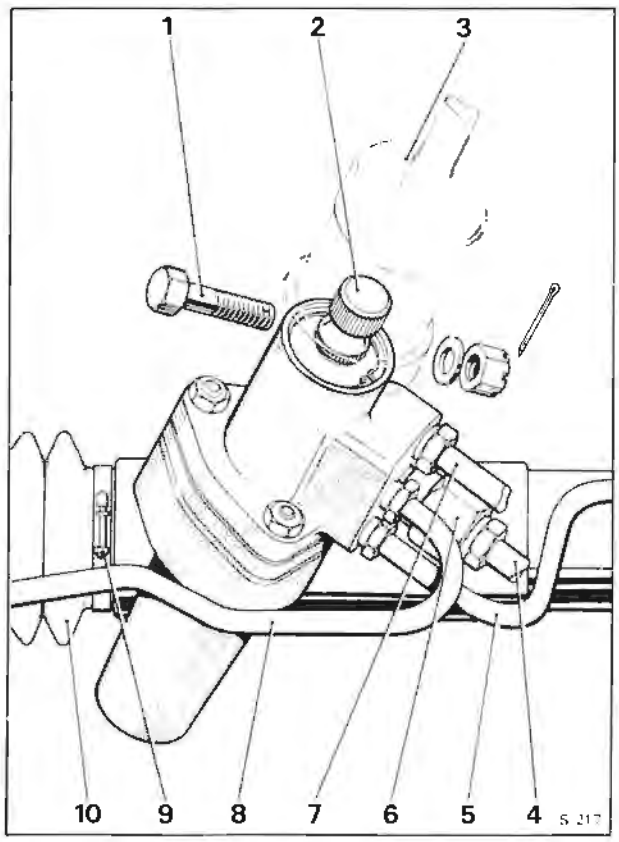

Fig. N4 Spool valve and pinion housing
1 Bolt - lower link to spline
2 Valve and pinion shaft
3 Heatshield
4 Hydraulic feed pipework
5 Fluid feed to end of rack
6 Anti-joggle valve adapter
7 Hydraulic return pipework
8 Fluid feed to end of rack
9 Seal attachment clip
10 Convoluted neoprene seal

Note
The steering unit is a safety critical part. The unit must be handled with great care. Avoid impact loads on the input shaft or the centre off-take and damage to the convoluted seals which could cause premature failure of the unit.

Do not disturb the end plug or locking nut whilst the rack and pinion unit is fitted in the car.

All threads on the rack assembly are metric, except the mounting bolts to the sub-frame and the lower steering column linkage, which remain Unified.

Rack and pinion unit - To remove from sub-frame
1. Drive the car onto a service workshop lift and raise to a convenient working height.
2. Remove the gear range selector thermal cut-out (see Chapter M - Electrical System).
3. Remove the high pressure feed and low pressure unions feeding external pipework into the spool valve housing.

Fit caps to prevent ingress of dirt (see Fig. N4).
4. Remove the split pin, castellated nut and bolt holding the steering pinion box spline. Ensure the freedom of the spline to enable an easy dismantling of the unit in Operation 7.
5. Straighten the tab washer, unscrew and remove the bolts holding the inner ball joint bracket to the steering unit centre position. When removing the bolts care must be taken not to disturb the steering unit oil seal or Allen bolt (see Fig. N12).
6. Support the rack and pinion unit, then remove the setscrews attaching the unit to the sub-frame brackets. Place tapping blocks carefully aside.
7. Lower the unit from under the suspension, carefully extracting the input shaft from the lower column assembly.
Warning
Do not strike this unit with a hammer. Being a safety critical part, extreme damage could be caused.
8. Under clean bench conditions, examine the convoluted seals for deterioration and for leaks of lubricating oil at the centre block oil seal.

Replacement of convoluted seals (see Fig. N6)
If when a convoluted seal is removed due to splits or leakage, there is evidence of ingress of water and road dirt, a complete strip down, clean and inspection should be made of the rack, tube and associated parts.
1. Place separate drip trays under the end and centre positions of the unit.
2. Opposite to the pinion box end of the unit, carefully remove the hydraulic pipe union.
3. Grip the bracket at the same end in a vice, not exerting too great a pressure. Unscrew and remove the blanking plug from the end of the rack tube and withdraw the outer tube and bracket. Cover the dismantled parts with a clean cloth.
4. Discard the 'O' rings fitted into the seat of the blanking plug and inside the mounting foot. Cover the dismantled parts with a clean cloth.

If it is necessary only to replace the convoluted seals at the dismantled end of the unit, there will

be no need to disturb the centre block and oil seal. If however, both convoluted seals are to be removed, the centre block must be dismantled as described in the following operations.

5. Unfasten the socket head cap screw holding the centre block in position against the rack gear. Withdraw the block and oil seal. Protect under a clean cloth.

6. Slacken the retaining screws holding the four ring clips to the convoluted seals.

7. Remove the seals, ring clips and centre sleeve. The latter component must also be covered to prevent ingress of dirt.

8. Turn the unit over with the elongated slot facing downwards to drain the lubricating oil.

9. Fit new seals, clipping these to the static end positions and the centre tube.

10. Ensure that the screw heads of all the retaining clips face downwards and to the rear of the rack, to facilitate service inspection checks on the tightness of the clips when the unit is fitted back into the vehicle. Lift the unit higher at the dismantled end and pour 60cc (0.10 pints) of new, approved lubricating oil through the slot in the centre sleeve.

11. Fit the centre block, using the flexible bonding agent 'Silastic 732 RTV Sealant' on the mating surfaces of the seal, to ensure a leak free joint.

12. Fit new 'O' rings and replace the outer tube and bracket.

Note

To ensure control over the relative flatness of the two suspension mounting bracket faces, place the assembly with brackets face down onto a surface table or suitable flat fixture.

Lightly clamp the brackets before torque tightening the blanking plug.

13. Screw in the blanking plug, ensuring the 'O' ring rests in its correct seating. Torque tighten to between 4,8 kgf.m amd 5,5 kgf.m. (35.0 lbf.ft. and 40.0 lbf.ft).

14. Screw the hydraulic pipe union carefully into the end of the blanking plug to form a good seal. Torque tighten to the figures quoted in Chapter P.

15. The unit is now ready for fitting to the car.

Rack and pinion unit - To dismantle (see Fig. N7)

If the unit has an internal fault which necessitates the removal of the rack, dismantling to the stage of withdrawing the centre block as shown from the heading - Replacement of convoluted seals, to Operation 8 inclusive - should be completed before continuing with the following.

1. After draining the lubricating oil, place the unit onto two 'vee' shaped wooden blocks.

2. Remove the remaining feed pipe and place carefully aside. Blank off the hole in the pinion box and end cover.

3. Mark the relationship between the input shaft spline and pinion box housing with the steering in the 'straight ahead' position. Use the screwed plug to ensure a correct setting.

4. Unscrew the three nuts and release the valve

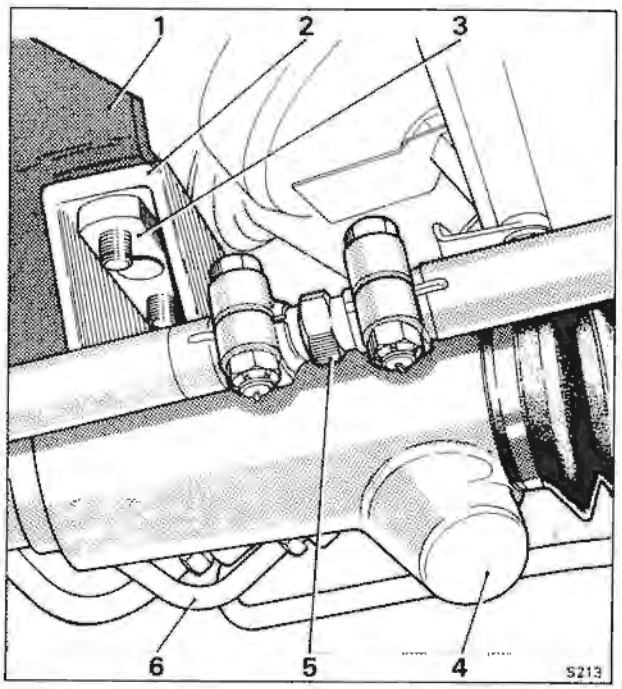

Fig. N5 Steering to sub-frame mounting

1 Sub-frame bracket
2 Steering unit mounting foot
3 Tapping block
4 Pinion housing
5 Track rod adjuster
6 Hydraulic pipework

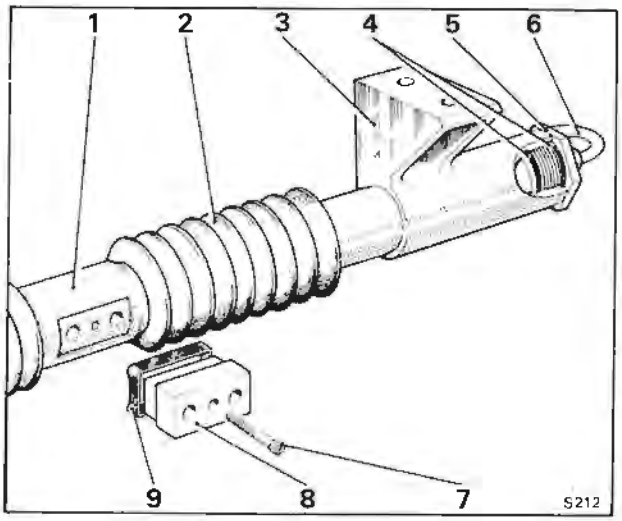

Fig. N6 Removal of convoluted seals

1 Centre tube
2 Seal
3 Mounting foot
4 'O' rings
5 Blanking plug
6 Fluid feed pipework
7 Cap head socket screw
8 Centre block
9 Shaped seal

Printed in England

© Rolls-Royce Motors Limited 1978

October 1978

T.S.D. 4200

and pinion assembly by gripping the pinion spline with one hand and keeping the two halves of the valve housing together with the other hand. With a turning movement lift the assembly, **using the splined shaft,** clear of the pinion box casting. Remove the setting shims but record the number and position.

5. Unscrew the remaining end cap and place safely aside. Discard the internal 'O' ring.

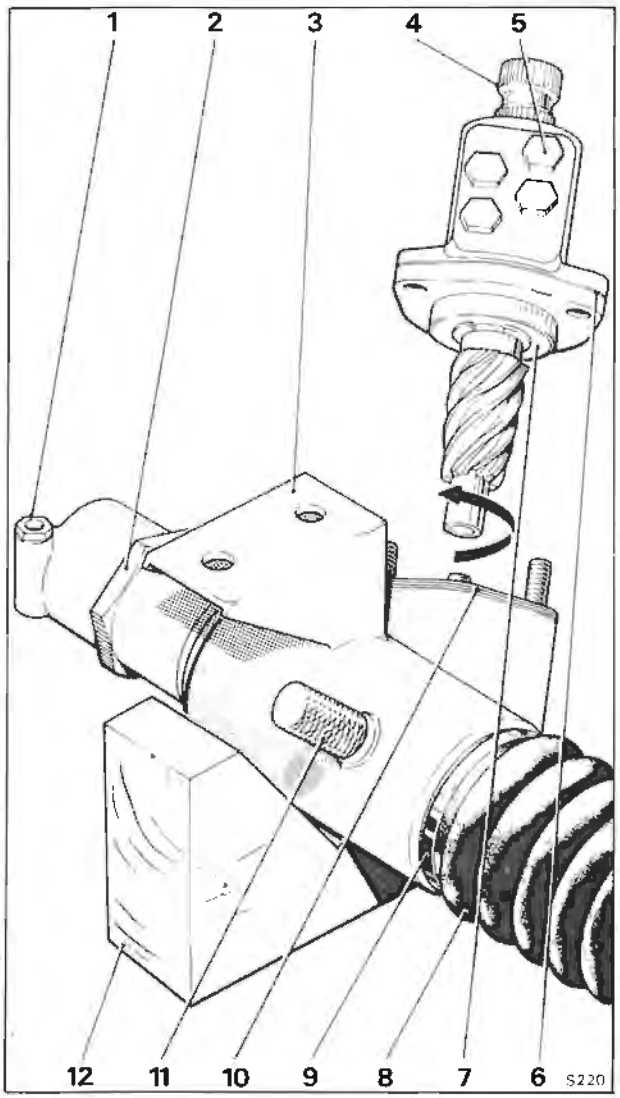

Fig. N7 Pinion and spool valve removal

1 Plastic dust cap
2 End cap locknut
3 Mounting foot
4 Pinion boss
5 Plastic dust caps
6 Bearing pre-load shim
7 Bearing carrier
8 Convoluted seal
9 Seal clip
10 Pinion pre-load shims
11 Rack centring plug
12 Support

6. Using an appropriate sized wooden dowel, carefully press the end of the rack until the P.T.F.E. ring and oil seal appear **at the pinion end of the unit.**

7. Support this end of the rack whilst continuing to withdraw from the tube. Ensure the rack and tube do not make contact or the P.T.F.E. bearing is not damaged during removal past the centre slot and pinion opening.

It is easy to cause damage to the internal surface of the tube. Care should be taken at this stage.

8. Inspect all components including the internal faces of the end caps, the lip seals and P.T.F.E. bearing. Wash all metal parts in 'Genklene' or an equivalent cleaning fluid. Ensure components are dry before new 'O' rings are fitted.

Pinion and spool valve assembly

The pinion and spool valve assembly comprises the following main service items, upper oil seal, P.T.F.E. rings, lower oil seal, lower oil seal carrier, 'O' rings, paper joint washers, pre-load shims and snap ring.

Upper oil seal - To replace

1. Remove the upper circlip and plastic washer, then carefully lift the housing off the spool valve unit ensuring the P.T.F.E. rings are not damaged.

Note the number and position of existing paper joint washers and pre-load shims between the ball race carrier and pinion housing.

2. Carefully prise out and discard the upper oil seal.

3. Fit a new upper oil seal using special applicator tool (RH 9121). This seal has a pressure lip and a dirt lip. In the cavity between the two lips, apply molybdenum disulphide grease.

Failure to do this could result in noisy seal action.

4. To protect the new seal, tightly wrap a single layer of clear adhesive tape around the spool valve spline.

5. Carefully fit the spool valve back into the housing, ensuring that each P.T.F.E. ring enters the bore squarely with no pinching of the edges against the bore.

Do not use force to assemble.

P.T.F.E. rings - To replace

1. Dismantle the unit to the stage of having removed the circlip, washer, spool valve housing, paper joint washers and pre-load shims. Discard the upper oil seal.

2. Cut into the P.T.F.E. rings with a sharp instrument having a smaller dimension than the width of the groove, taking care not to damage the finely machined surfaces of the spool valve. Use 'vee' shaped wooden blocks to support the end diameters during removal of the rings.

3. Inspect the P.T.F.E. ring grooves.

4. Remove the lower pinion oil seal, 'O' ring and carrier.

5. Withdraw the upper carrier of the ball race.

6. Remove the snap ring under the ball race carrier

housing taking care not to lose any of the (14) ball bearings when withdrawing the assembly.
Place carefully aside.

7. Immerse the new P.T.F.E. rings in warm oil prior to fitting onto the special applicator (RH 9117). Failure to warm up the rings before fitting could cause cracking.

8. Place the tool over the input shaft spline and adjust until the base edge of the tool corresponds with the upper edge of the lowest spline groove.

9. Slide one P.T.F.E. ring into the groove.

10. Adjust the tool to fit the remainder of the rings into their respective grooves.

11. Remove the sleeve tool then size the rings by carefully pressing special tool (RH 9118) over the rings to reduce their diameter.

12. Tightly wrap a single layer of clear adhesive tape around the spool valve to protect the P.T.F.E. rings during assembly of the ball race carrier and lower oil seal. With these assembled, fit the (14) ball bearings and locate the assembly by fitting a new snap ring.

13. Fit the upper ball race carrier into position.

Lower oil seal - To replace

If the pinion unit is dismantled just to replace the lower oil seal it will be unnecessary to disturb the P.T.F.E. rings as shown in Operation 2 of the previous sub-section.

1. To remove the lower oil seal, 'O' ring and carrier, wipe the spool valve shaft and spline with a lint free cloth to enable a single layer of clear adhesive tape to be wrapped tightly around the spool valve P.T.F.E. rings.
2. To facilitate removal of the seal and carrier, lubricate the outside of the tape with steering fluid.
3. Lift out the seal and carrier.
4. Press out and discard the oil seal from the lower oil seal carrier.
5. Check that the carrier is free from damage and burrs.
6. Press a new oil seal into the carrier ensuring that the lip face of the seal is uppermost.
7. Slide the new seal and carrier over the adhesive tape and locate into the lower housing.

At this stage it will be necessary to re-set the thrust ball race pre-load detailed in the next sub-section.

Thrust ball race

If the spool valve and pinion unit is dismantled to the stage of inspecting the thrust ball race and it is found necessary to replace any thrust race components, the pre-load torque must be reset.

The following table gives a conversion of the spring balance readings quoted in the text, to a figure for use with a kgf.cm. (lbf.in.) torque spanner.

Note

If the readings are to be taken using a torque spanner, a slightly worn $^{11}/_{16}$ in. A/F socket is preferred to fit over the input shaft spline.

To protect the components wrap clear adhesive tape over the spline and spool valve rings.

Spring balance and arm		Torque spanner	
kgf	lbf	kgf.cm.	lbf.in.
0,0544	0.120	0,553	0.480
0,272	0.600	2,765	2.400
0,510	1.125	5,185	4.500
0,820	1.800	8,330	7.200
0,910	2.000	9,251	8.000
1,130	2.500	11,500	10.010
1,950	4.300	19,810	17.200
2,040	4.500	20,700	18.000

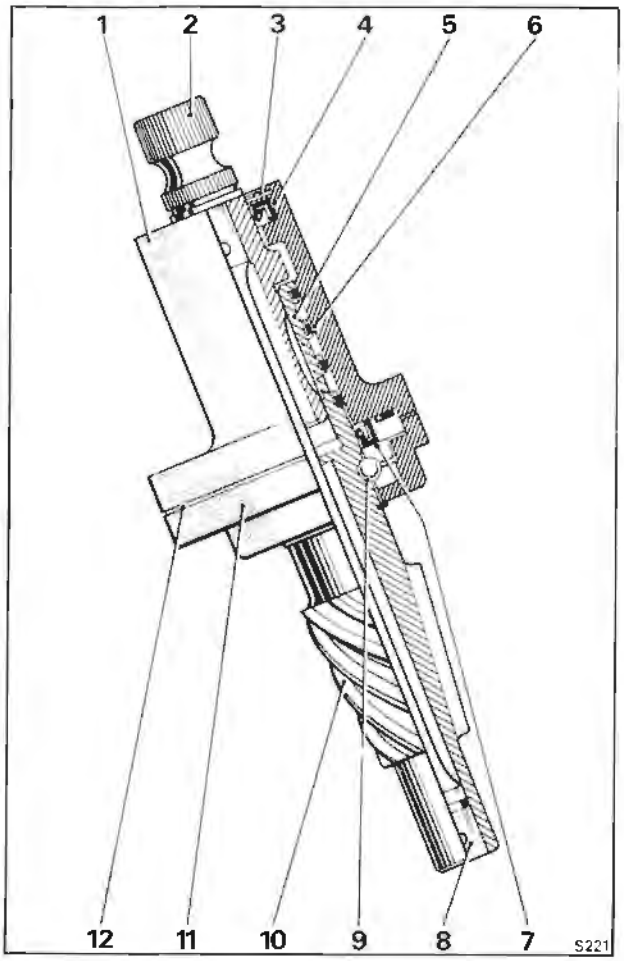

Fig. N8 Pinion and spool valve unit. Cut-away view

1 Spool valve housing
2 Spline
3 Circlip and plastic washer
4 Lip type oil seal
5 Spool valve
6 P.T.F.E. rings (4)
7 Lower oil seal
8 Torque arm
9 Thrust ball race
10 Pinion
11 Ball race carrier
12 Pre-load shim(s)

Printed in England
© Rolls-Royce Motors Limited 1978

1. Fit the ball race, with any new components required and lubricate the assembly with a light application of new approved oil. Ensure the oil does not contaminate the area bounded by the two oil seals.
2. Replace the lower oil seal carrier as shown in sub-section, 'Lower oil seal - To replace'.
3. If a new lower oil seal has been fitted, first place a new paper gasket onto the face of the lower oil seal carrier, then the orginal stack of shims plus one additional shim of at least 0,254 mm (0.010in.) thickness and lastly a new paper gasket.

This additional shim will effectively remove any bearing pre-load when assembly is completed.

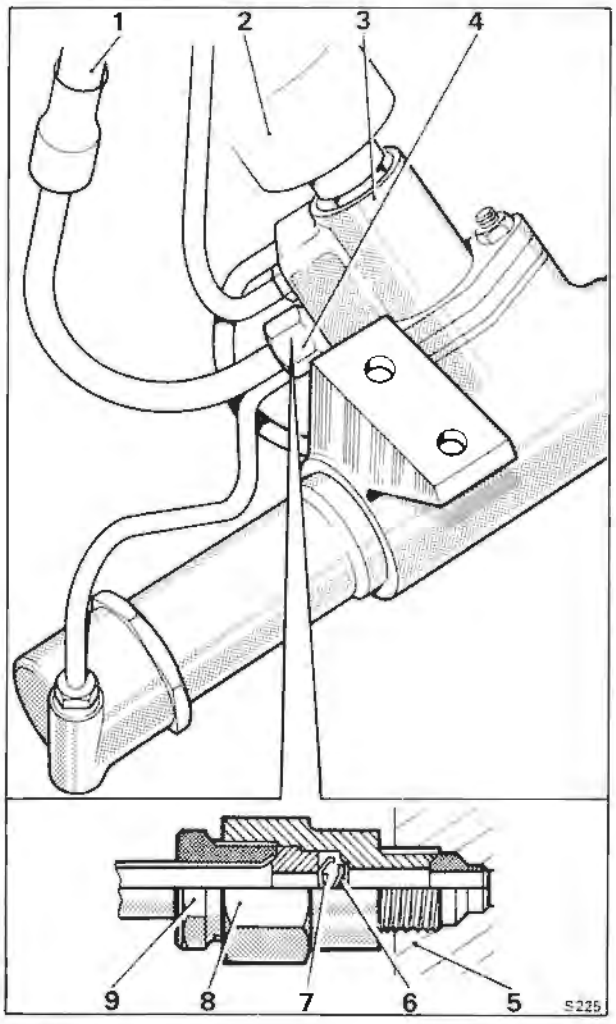

Fig. N9 Anti-joggle valve
1 High pressure fluid
2 Heatshield
3 Spool valve housing
4 Anti-joggle valve
5 Spool valve casting
6 Spring
7 Flap valve
8 Adapter
9 Pipe union

Shims are available in the following **nominal** sizes.
0,063 mm. (0.0025 in.)
0,127 mm. (0.005 in.)
0,254 mm. (0.010 in.)
1,270 mm. (0.050 in.)

4. Remove the adhesive tape from the spool valve shaft only and wipe the spool valve assembly with a clean lint free cloth. Lightly lubricate the spool valve assembly with power steering fluid.

Do not fit the lower oil seal carrier 'O' ring at this stage.

5. Carefully fit the spool valve housing onto the spool valve shaft ensuring that each P.T.F.E. ring enters the bore of the housing squarely with no pinching of the ring edges against the bore.
Do not use force to assemble.
6. **Lightly** 'nip' the housing and carrier together using three suitable nuts and bolts then rotate the input shaft a number of times to reduce initial drag.
7. Grip the sub-assembly in a soft-jawed vice and fit the special torque arm tool (RH 9123) to the input shaft spline.
8. Using a spring balance, note the reading required to rotate the input shaft to measure pinion seal drag and spool valve friction. This should be between 0,016 kgf. and 0,08 kgf. (0.120lbf. and 0.60lbf.).

If the reading is above 0,08 kgf. (0.60lbf.), bearing pre-load may still exist and it will be necessary to fit an additional shim.

Note
If after fitting additional shims to the extent that no bearing pre-load exists, ie. end float appearing in the spool valve, then some other source of tightness, such as, incorrectly size P.T.F.E. rings or other faulty compounds could be the cause.

9. Assemble and test the unit again as shown in Operations 5 to 8, until a figure within the limits noted in Operation 8 have been achieved.
10. Dismantle the spool valve housing then reduce the shim stack by one 0,063mm. (0.0025in.) shim.
11. Assemble the unit and torque tighten the flange nuts to between 2,04 kgf.m. and 2,55 kgf.m. (14.75 lbf.ft and 18.50 lbf.ft.) to achieve a spring balance reading to rotate the shaft of not more than 0,510 kgf. (1.125 lbf).

Continue to reduce the shims, until the final spring balance reading shown in Operation 11 is attained.

Important
Do not 'short cut' this exercise. Excessive pre-load can damage the bearing parts.

12. **Finally** remove the spool valve housing to fit an 'O' ring into the lower oil seal carrier.

Ensure the paper gaskets are in good order and fitted top and bottom of the shim stack.
13. Lubricate the spool valve and pinion seals with steering fluid and the upper oil seal with a light coating of molybdenum disulphide grease.
14. Carefully assemble the spool valve housing.
15. Ensure new paper gaskets are fitted to the under-

side of the ball race carrier and the steering rack pinion housing face.
16. Fit the orignal number of shims and carefully fit the complete spool valve assembly into the pinion housing.
17. Ensure the hydraulic pipe connections of the spool valve housing are in the correct relative position.
18. The correlation mark on the input shaft should align with the mark on the spool valve housing when the assembly is fully engaged with the rack in the central position.
19. Tighten the retaining nuts to between 2,04kgf.m. and 2,55kgf.m. (14.75lbf.ft. and 18.5lbf.ft.).
20. Replace any rack lubricating oil up to the correct total amount of 60cc. (0.10 pints) of EP90 grade, that may have been lost during dismantling.

Anti-joggle valve (see Fig. N9)
1. With the steering dismantled remove the anti-joggle valve.
2. Check that the spring and flap are functioning by pressing a probe carefully onto the top of the flap to ensure that adequate compression of the assembly occurs and the flap seats correctly.
3. Wash out the assembly in 'Genklene' or equivalent cleaning solution then dry, using a controlled jet of dry pressurised air into the male thread end of the unit only.
4. Fit blanking plugs into each end of the adapter.

Pipe unions
If the olive which forms the seating of the pipe union is found to be damaged it will be necessary to remove the spool valve housing before it can be renewed.
1. Extract the faulty component by tapping a suitable thread into the bore of the seating and inserting a setscrew with a half nut under the head, a washer and distance tube.
2. Lift the setscrew by turning the nut against the face of the washer to withdraw the olive.
3. Fit a new seating in position by pressing it squarely into the bore using an appropriate diameter soft mandrel.

It must be emphasised that strict cleanliness must be observed when carrying out the above operations.

Rack and pinion unit - To assemble

It is essential that the rack should only be removed or refitted from the pinion end of the unit to ensure that the P.T.F.E. bearings or oil seals are not damaged by the internal thread at the blanking plug end of the assembly.

At this stage, check the bore of the rack tube for scoring or damage
1. With the rack unit out of the tube, fit the scarf-jointed P.T.F.E. rack bearings into their respective grooves in each end of the rack.
2. Gently press each scarf-joint together and measure that each gap gives an initial (nominal) measurement of 2,03mm (0.080in.)

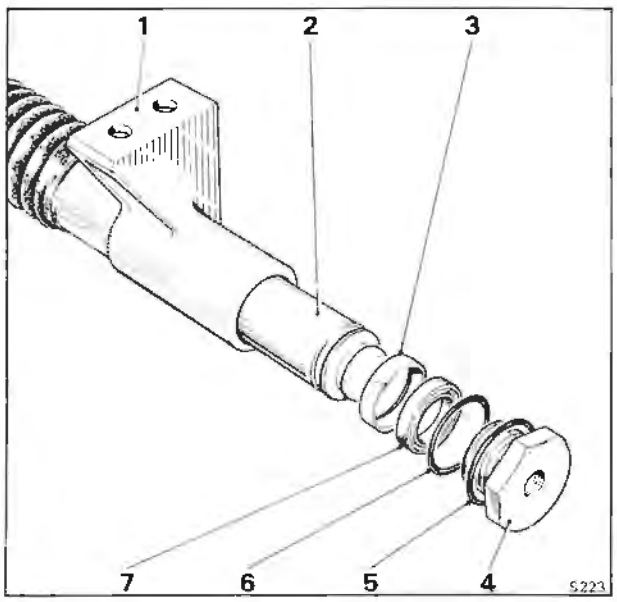

Fig. N10 Assembly of free end components
1 Mounting foot
2 Rack spindle
3 P.T.F.E. seal
4 Blanking plug
5 End plug 'O' ring
6 Tube 'O' ring
7 Oil seal

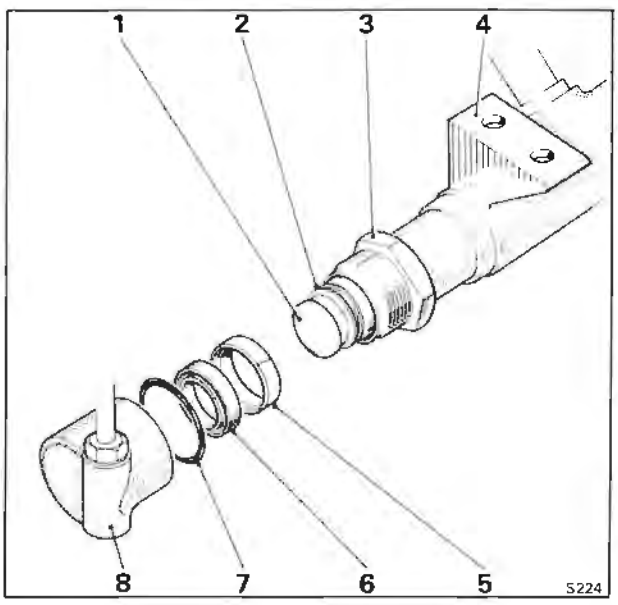

Fig. N11 Assembly of pinion box end components
1 Rack spindle
2 P.T.F.E. seal carrier
3 Locknut
4 Mounting foot
5 P.T.F.E. seal
6 Oil seal
7 End cap 'O' ring
8 End cap

Printed in England
© Rolls-Royce Motors Limited 1978
October 1978
T.S.D. 4200

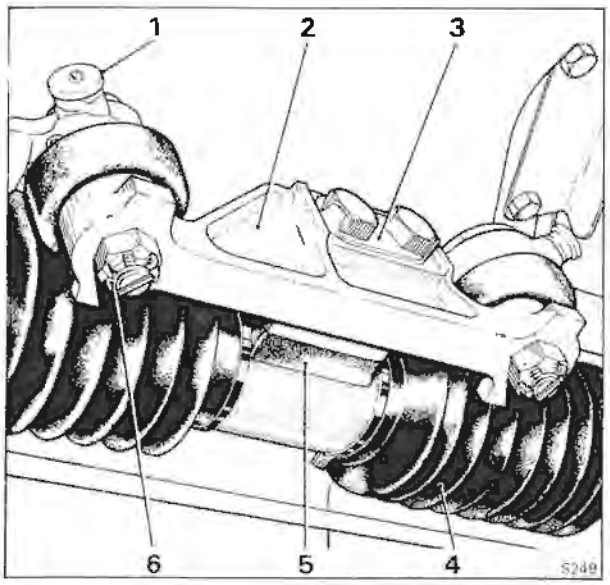

Fig. N12 Inner ball joint bracket in position

1 Ball joint grease nipple
2 Bracket
3 Tab washer
4 Convoluted seal
5 Centre block seal
6 Castellated nut and split pin

In the case where the two ends of the P.T.F.E. ring butt together or in the event of a smaller than nominal gap being observed, it will be necessary to remove the ring and pare one end of the scarf joint to bring the gap to the correct figure.

3. Using sizing tools RH 9114, RH 9113 and RH 9112, in this order, progressively reduce the diameter of the P.T.F.E. bearings until these are a sliding fit in the rack tube.

At this stage ensure that the gap at the scarf-joint has not gone below a minimum of 0,254mm (0.010in.) and is positioned so as not to come into contact with the edges of the centre slot when the rack is assembled.

Check for and remove any burrs from the slot. Wipe the area clean before assembly.

4. From the pinion end, press the rack slowly into the tube until the P.T.F.E. bearing reaches the mid-position of the centre slot.

Ensure the bearing is not damaged when moving along the slot.

5. With the P.T.F.E. bearing visible in the centre slot, lightly lubricate a rack oil seal, fitting this through the slot in the tube, and using finger pressure press the seal onto the end groove of the rack. If the rack is turned slowly, this will assist in the assembly of the seal.

6. Lubricate the other rack oil seal and again, using finger pressure fit this seal onto the pinion end groove.

7. Slide the rack unit slowly into the tube checking that no nipping occurs when the oil seal passes into the closed portion of the tube. The pinion end seal must be manipulated into the tube by the fingers.

8. Lock the rack into the mid-position using centring plug (RH 9119).

9. Exercise and fit a new 'O' ring into the end cap of the unit ensuring it sits into its groove otherwise it can be nipped and damaged. A degree of feel must be applied when screwing on the cap to ensure the 'O' ring fits correctly.

10. Allow the end cap to butt against the inner face then back off the thread approximately one full turn to allow for hydraulic pipe alignment.

11. Torque tighten the lock-nut to the figures quoted in Chapter P using the open ended torque wrench adapter tool (RH 9125).

12. Fit new convoluted seals, clipping these to the static end positions and the centre tube.

13. Ensure that the screw heads of all the retaining clips face downwards to facilitate a check on the tightness of the clips at the vehicle servicing intervals. Lift the unit higher at the dismantled end and pour 60 cc (0.10 pints) of new EP90 lubricating oil through the slot in the centre sleeve.

14. To set the pinion mesh pre-load, ensure new paper gaskets are fitted to the underside of the ball race carrier and the steering rack pinion housing face.

15. Fit the orignal shim stack together with additional shims of approximately 3,8mm. to 5,08mm. (0.15in. to 0.20in.) over the studs of the pinion housing.

16. Carefully assemble the spool valve and pinion unit into the steering rack housing ensuring the correlation mark on the input shaft and spool valve housing align when the pinion is fully engaged in the rack, with the rack in the central position.

Remove the centring plug (RH 9119).

17. Tighten the flange retaining nuts to between 2,04 kg.m and 2,55 kg.m. (14.75 lbf.ft. and 18.5 lbf.ft)

18. Fit the special arm (RH 9123) to the input shaft spline and using a spring balance measure the load required to rotate the input shaft approximately one turn in each direction **from the centre position**.

19. The maximum load necessary to rotate the shaft and to overcome both rack seal drag and spool valve friction should be 0,91 kgf. (2,0 lbf).

20. If the force required is above this figure, then pinion mesh pre-load is still present and additional shims must be fitted between the pinion and rack housing assembly.

Alternatively, the steering rack P.T.F.E. bearings could be incorrectly sized and the rack will have to be withdrawn. Further reduce the diameter of the bearings using sizing tools RH 9114, RH 9113 and RH 9112, in this order.

21. Carefully replace the steering rack ensuring no damage occurs to the P.T.F.E. bearings and oil seals. Then fit the pinion unit.

Top up the system with lubricating oil.

22. Having obtained a maximum total figure for the seal drag and spool valve friction, of less than 0,91 kgf. (2.0lbf). with the special arm (RH 9123) and spring balance: progressively reduce the number of shims to give a minimum figure of 1,13kgf.

(2.5lbf.) above the seal drag and spool valve friction detailed in Operation 18.

Example

If the total rack drag and spool valve friction is equal to 0,82 kgf (1.8lbf) using a spring balance; then the minimum total load by progressively removing shims will be 0,82 kgf+1,13kgf (1.8lbf+2.5lbf) =1,95kgf (4.3lbf).

The maximum total turning load should not exceed a spring balance reading of 2,04 kgf (4.5 lbf)

23. Return the rack to the straight ahead position and fit the centring plug (RH 9119).

24. Carefully assemble the pinion unit to the steering rack housing ensuring the correlation mark on the input shaft and spool valve housing align when the pinion is fully engaged with the rack. Check that new paper gaskets are fitted.

25. Tighten the flange retaining nuts to the figures quoted in Chapter P.

26. Fit the centre block, using the flexible bonding agent 'Silastic' 732 RTV Sealant on the mating surfaces of the seal to ensure a leak free joint. Secure the centre block in position using the socket head cap screw.

27. Exercise new 'O' rings before they are fitted to the blanking plug and lubricate with power steering fluid to ensure that the rings fit snugly into their respective locating channels. Replace the outer tube and bracket assembly.

28. Set the two suspension brackets of the assembly flat down onto a surface table and clamp firmly into this position.

29. Screw in the blanking plug to the torque figures quoted in Chapter P.

30. Fit pipe runs from the end caps to the pinion valve assembly using the torque figures quoted in Chapter P.

Important

The unit is now ready for fitting to the car, **but do not remove the centring plug at this stage.**

Rack and pinion unit - To fit to the sub-frame

1. Have the steering wheel held in a central position.

2. Carefully introduce the pinion box spline into the lower link yoke and support the unit in this position.

3. Fit the setscrews and washers to the sub-frame brackets, through the mounting feet of the unit and into the tapping blocks (see Fig. N5).

4. Tighten the four setscrews to the torque figures quoted in Chapter P using the special tool arm (RH 9122) fitted to the torque spanner. Release the support.

Important

It is essential that the nuts indicated in Operation 4 are tightened to the correct torque figure.

5. Align the spacer between the inner ball joint bracket and into the steering unit centre sleeve.

6. Fit a new tab washer and finger tighten the setscrews.

7. Torque tighten the inner ball joint bracket setscrews to the figures quoted in Chapter P, carefully checking that the oil seal is not displaced.

Bend the tab washer to lock the setscrews, avoiding any impact to the unit.

8. Connect the pipework from the pump and oil cooler to the pinion box, ensuring that the union joints are wiped clean before fitting. Torque tighten the unions to the figures quoted in Chapter P.

Important

Correct routing of the pipework is essential.

Kits of parts

To overhaul the rack and pinion assembly, the following kits of parts are available.

Spool valve renewal kit.
Rack overhaul kit.
Bellows replacement kit.

Modification of the steering unit main tube and end cap on the pinion box side of the unit has been incorporated onto the following cars and all subsequent car serial numbers.

Silver Shadow II and Bentley T2

Right-hand drive

SRH 34532	SRH 34664
SRH 34573	SRH 34678
SRH 34575	SRH 34680
SRH 34576	SRH 34710
SRH 34581	SRH 34712
SRH 34650	SRH 34714
SRH 34662	SRH 34715

Left-hand drive

SRG 34332	SRG 34481
SRX 34338	SRG 34482
SRG 34428	SBG 34486
SRG 34431	SRG 34499
SRG 34433	SRG 34505
SRX 34435	SRG 34508
SRG 34438	SRG 34522
SRG 34444	SRG 34526
SRG 34448	SRG 34537
SRG 34449	SRG 34547
SRG 34456	SRG 34548

Silver Wraith II

LRG 34304	LRG 34391
LRG 34308	LRG 34393
LRH 34390	LRH 34394

Corniche

DRG 32869	CRG 33109
CRG 33028	DRG 33113

Camargue

JRX 32181

Printed in England

© Rolls-Royce Motors Limited 1978

October 1978

T.S.D. 4200

Section N2

Steering pump

Introduction

The assembly comprises a bottle shaped fluid reservoir with dipstick attached to the filler cap and a conventional rotor vaned impellor. The pump is powered from the engine crankshaft via twin driving belts. The unit continually circulates oil to the rack and pinion assembly through a control valve at a constant flow rate, independent of the speed of the pump.

Steering pump - Routine checks and topping-up procedure (see Fig. 14)

1. Remove the filler cap and check that the fluid level is at least up to the 'FULL COLD' mark on the dipstick. If necessary add steering fluid. Use only the approved steering fluids quoted on the Approved lubricants chart.
2. Start the engine and run until normal operating temperature is reached 77 ° C. (170 ° F.) then stop the engine.

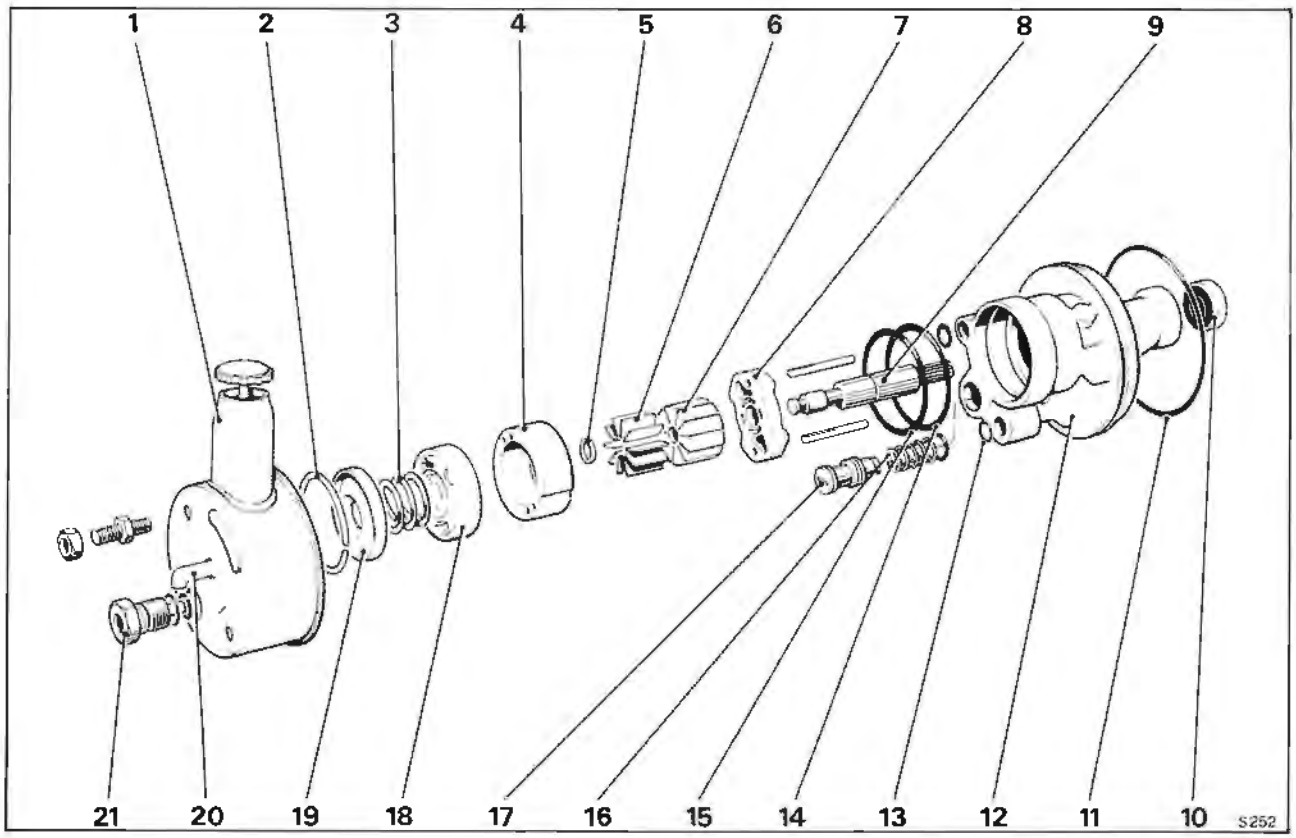

Fig. N13 Steering pump. Exploded view

1 Reservoir and filler
2 End plate retaining ring
3 Pressure plate spring
4 Pump ring
5 Snap ring
6 Vanes
7 Rotor
(4 to 7: Supplied in kit form as spares)
8 Thrust plate
9 Drive shaft
10 Oil seal
11 'O' ring. Reservoir seal
12 Pump housing
13 'O' rings. Reservoir to pump housing seal (2)
14 'O' ring. Pressure plate
15 'O' ring. End plate
16 Return spring. Flow control valve
17 Flow control/pressure relief valve
18 Pressure plate
19 End plate
20 Return pipe
21 Pressure pipe union

Printed in England
© Rolls-Royce Motors Limited 1980
March 1980
T.S.D. 4200

3. Remove the filler cap and check the fluid level on the dipstick. If necessary add fluid to raise the level to the 'FULL HOT' mark. Do not overfill. Ensure the filler cap is secure when replaced.

Belt tension - To check

The steering and refrigeration pumps are driven by a matched pair of belts from the two front grooves of the engine pulley.

1. The tension of these belts when correct is 31,75 kg. (70 lb.). This is checked by applying a spring balance load of 4,1 kg. (9 lb.) to cause a 9,5 mm. (⅜ in.) deflection of the belts when applied to a point midway between the steering and refrigeration pumps.

A belt tension meter, shown in Figure N16 can be used, giving a more accurate check than a visual approximation of the deflection.

If the tension in one belt differs markedly from the other, a new matched pair must be fitted.

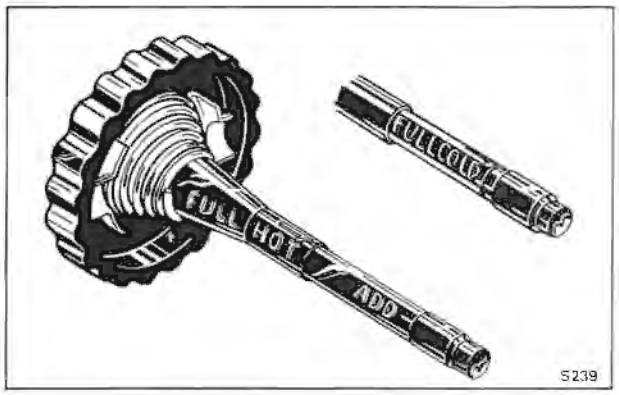

Fig. N14 Reservoir filler cap markings

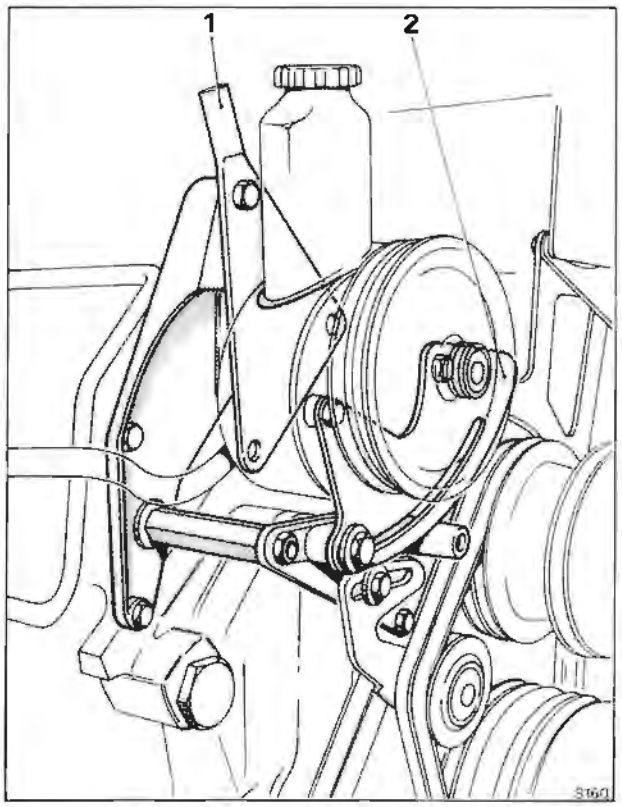

Fig. N15 Pump mountings and belt tensioning

1 Rear mounting bracket
2 Pivot plate

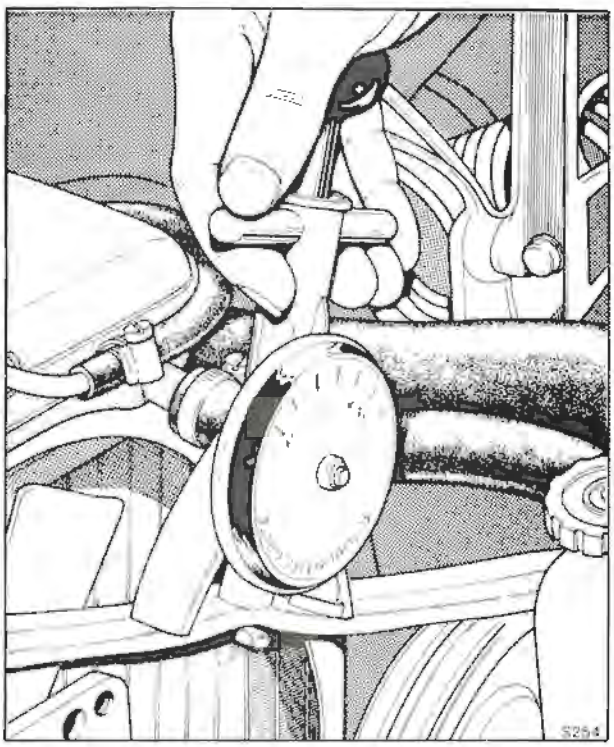

Fig. N16 Use of belt tension meter

2. To adjust the tension, slacken the setscrew of the slotted swivel bracket at the front of the pump, the setscrew securing the bracket to the rear and above the pump and the union of the supply hose connected at the rear of the pump. Move the pump the required amount (see Fig. N15). Tighten the assembly noting that the pipe union must be torque tightened to the figures quoted in Chapter P.

When tightening the supply hose union on left-hand drive cars, ensure the pipework is in an upright position. This will give a bowed effect to the portion covered with a Sorbo rubber shield thus clearing the engine components (see Fig. N26) and eliminating chafing of the piping.

Note

A slipping belt will squeal and produce judder at the steering wheel nearing full lock. **Belt dressing must not be applied to prevent slip.**

Steering pump - To remove

On later cars a metric pump is fitted. Refer to page N2 - 8 for further information.

1. Using a syringe, draw off as much fluid as possible from the steering pump reservoir and discard.

2. Slacken the pump belts by loosening the locking screw in the slotted adjustment bracket and the nut on the pivot bracket at the rear of the pump.
3. Unscrew the pressure pipe union.
4. Remove the setscrew and plain washer from the top hole of the rear plate.
5. Support the pump and remove the locking setscrew of the slotted adjustment bracket.
6. Draw the pump forward to expose the hose connection at the rear of the pump. Disconnect the hose, blanking off the holes in the pipes and the pump body.
7. Remove the pump and fasten the hose in a raised position.

Steering pump - To dismantle
This pump is a service exchange item and will normally be replaced by this method without the service engineer having to dismantle the unit.

In countries where difficulty may be experienced in obtaining a service replacement unit, the following information on servicing the existing pump, is provided.
1. Pour away any fluid remaining in the pump.
2. Remove the pulley using special tool (RH 9106). Never use a hammer to drive the pulley from the shaft as this will cause damage to the pulley and pump.
3. Remove the three setscrews securing the slotted adjustment bracket to the front of the pump. One of the screws is fitted with a distance piece; note the position to facilitate assembly.
4. Using suitable soft jaw covers lightly clamp the pump drive-shaft downwards in a vice.
5. Remove the pipe union from the rear of the pump.
Note
Care must be taken not to exert too much pressure on the shaft when removing fittings as this may distort the shaft bearing.
6. Remove the mounting studs from the reservoir housing.
7. Withdraw the reservoir by rocking this section and lifting to clear the sealing 'O' ring. Discard the 'O' ring.
8. Remove and discard the 'O' rings sealing the mounting stud and pipe union holes.
9. Press a centre punch into the small hole situated in the housing rim directly opposite the control valve bore and depress the end plate retaining ring.
10. Using a screwdriver, lever out the retaining ring (see Fig. N17). Withdraw the centre punch.
11. With the retaining ring removed the end plate, being spring loaded, will lay level with the housing rim. If sticking occurs, a rocking action should free the plate.
12. Remove the pump from the vice and invert. The flow control valve and spring will now drop into the hand (see Fig. N18). Place safely aside.
13. Remove the end plate 'O' ring and discard.
14. Place the pump housing onto a clean bench with the shaft uppermost then, using a soft-headed mallet, tap on the end of the shaft until the pressure plate is freed.

Important
Do not drive the shaft downward into the housing more than is necessary to free the pressure plate.

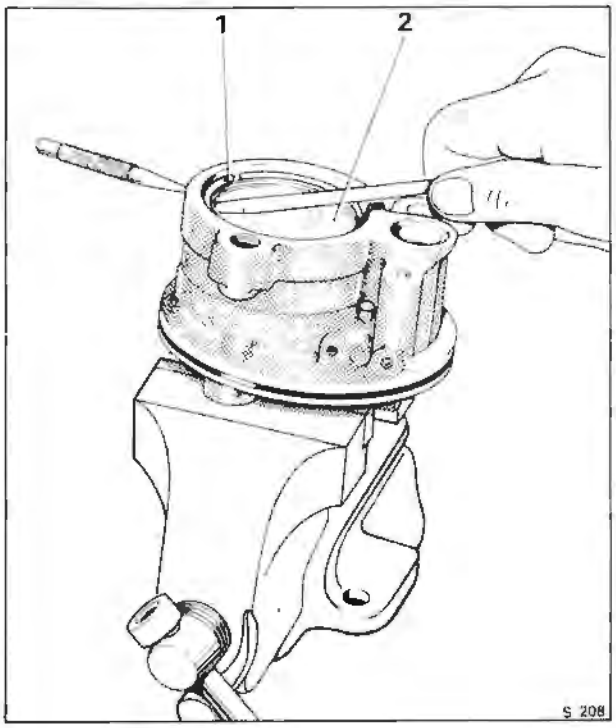

Fig. N17 End plate removal
1 Retaining ring
2 End plate

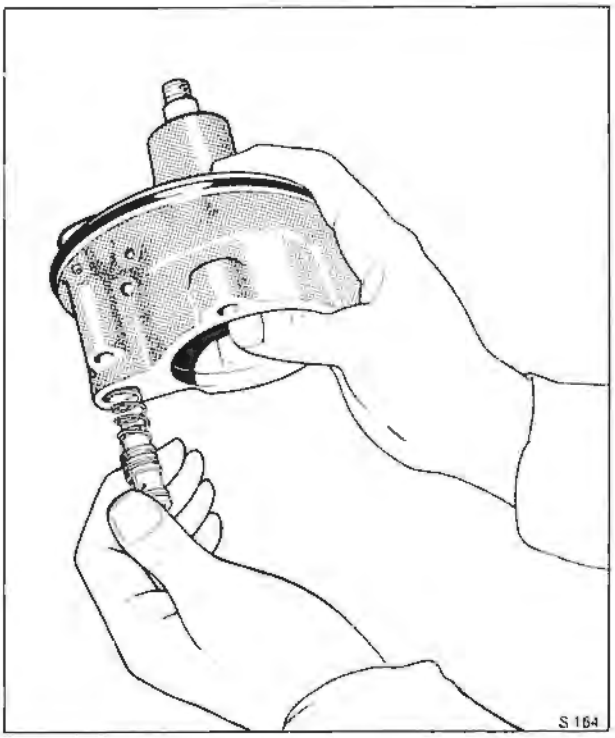

Fig. N18 Flow control/relief valve position

Printed in England
© Rolls-Royce Motors Limited 1977

15. Remove the pressure plate, pump ring and vanes.
16. Grip the pump shaft in the vice with the open end uppermost.

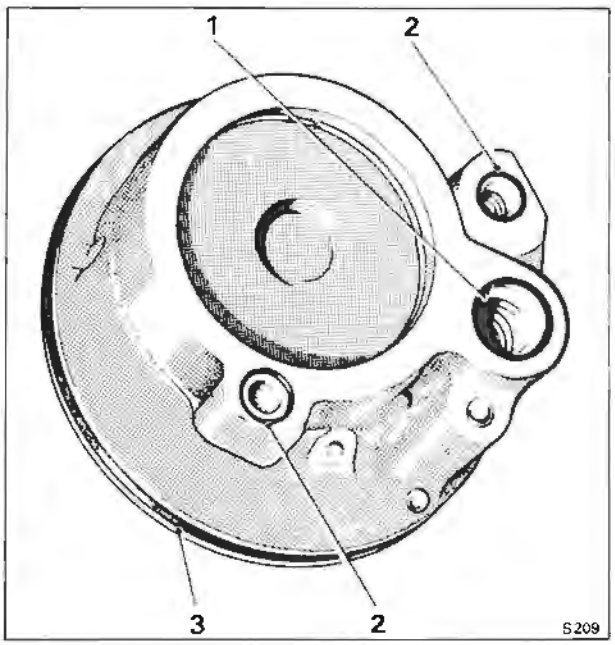

Fig. N19 Position of external sealing rings
1 'O' ring - pressure fluid adapter
2 'O' rings - reservoir securing studs (2)
3 'O' ring - reservoir to pump housing

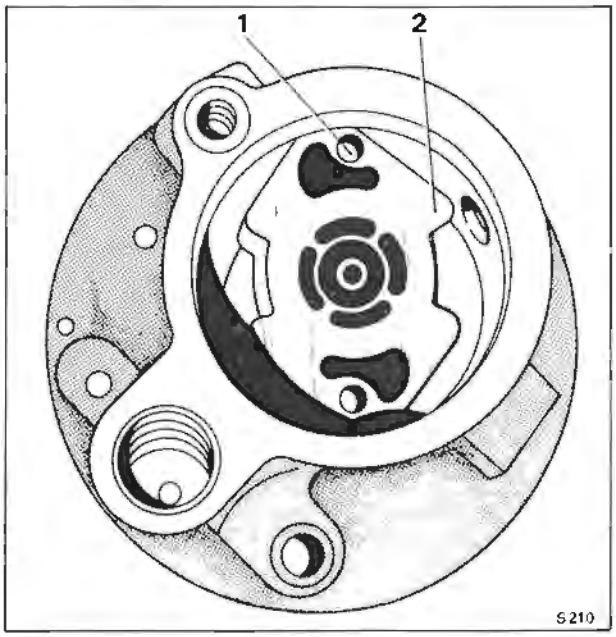

Fig. N20 Correct positioning of thrust plate
1 Dowel pin (2)
2 Thrust plate

17. With a small screwdriver withdraw the snap ring holding the vane rotor in position then remove rotor and thrust plate.
18. Withdraw the drive-shaft through the pulley end of the housing.
19. Inspect the lip-type oil seal. Renew, only if this component is damaged.
20. The dowel pins for locating the pressure plate remain in the pump housing.

Steering pump - To inspect
1. Clean all components prior to inspection. Apply an air pressure line to the pump housing to clean out all the fluid passages.
2. Check the pressure plate, thrust plate and rotor for scoring. Light scoring may be removed by lapping with a fine carborundum stone. Heavy scoring will necessitate renewal of the component concerned.
3. Ensure that the pressure plate is flat by checking it against the abutting surface of the pump ring.
Note
A high polish is always present on the inner faces of the thrust and pressure plates as a result of normal wear.
4. Check the contour surface of the pump ring for extreme wear. Normally there may be some scuff marks and uniform wear. This does not increase pump noise and is not detrimental to its function. However, if the wear comprises chatter marks or gouges that can be felt with the finger, renew the pump ring, rotor and rotor vanes (these items are supplied as a set).
5. Check the condition of the shaft bush in the pump housing.
6. Check the flow control valve for burrs or dirt which may cause the valve to stick in its bore. Check the bore.
7. Check the small screw on the end of the control valve for tightness. If loose, tighten; extreme care should be taken not to damage the machined surfaces.

Steering pump - To assemble
1. Before assembly carefully clean all components with the exception of the 'O' rings; these should be renewed.
Do not immerse the drive-shaft lip-type oil seal in a cleaning solvent as this could damage it.
2. Smear the new 'O' rings and shaft seal with petroleum jelly to facilitate correct location and fitting. Lubricate the internal metal components to be assembled with steering fluid.
3. Insert the drive-shaft into the front of the pump housing, passing through the lip-type seal.
4. Fit the thrust plate over the dowel pins and into position in the housing with the ported face uppermost, i.e. to the rear of the pump housing (see Fig. N20).
5. Fit the rotor to the splines on the shaft with the counterbore towards the thrust plate. The rotor must be a slide fit on the splines.

6. Position the pump ring on the dowel pins with the direction of rotation arrow uppermost.

The direction of rotation is anti-clockwise when viewed from the pump rear as shown in Figure N21.

7. Fit the drive-shaft snap ring to retain the rotor.

8. Fit the vanes into the rotor slots with the radiused edge facing outwards (see Fig. N22).

9. Fit the pressure plate 'O' ring. Lubricate the outside diameter of the pressure plate with petroleum jelly to prevent damage to the fitted 'O' ring, then locate it on the dowels, with the port face towards the pump ring.

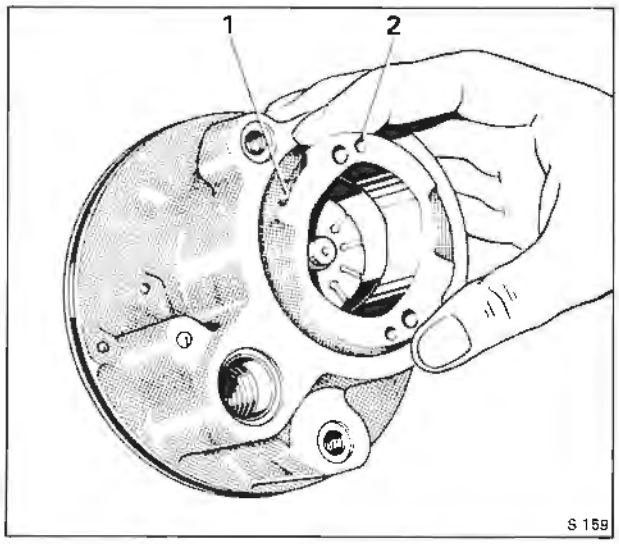

Fig. N21 Correct positioning of pump ring
1 Direction of rotation arrow
2 Dowel hole (2)

10. Apply pressure to the plate at its outer edges (see Fig. N23). Never apply great pressure or hammer the centre of the pressure plate as this will cause permanent distortion resulting in pump failure. The pressure plate will compress the seal by approximately 1,59 mm. (0.062 in.).

11. Position the pressure plate spring, locating the leading coil in the groove on the upper side of the plate.

12. Fit the end plate 'O' ring into the pump housing groove.

13. Lubricate the outer diameter of the end plate to prevent damage to the fitted 'O' ring. Position the pump under a suitable arbor press (see Fig. N24), and press the end plate into the housing sufficiently to allow the retaining ring to be fitted (see Fig. N19).

14. Fit the retaining ring ensuring that it is fully seated, then remove the pump from the press and tap the end plate to ensure correct seating.

15. Fit the flow control valve and spring as shown in Figure N18.

16. Fit the smaller 'O' ring seals to the stud and flow control valve holes.

17. Fit the large 'O' ring seal to the groove on the outer diameter of the pump housing then fit the reservoir.

18. Fit and tighten the two studs and union.

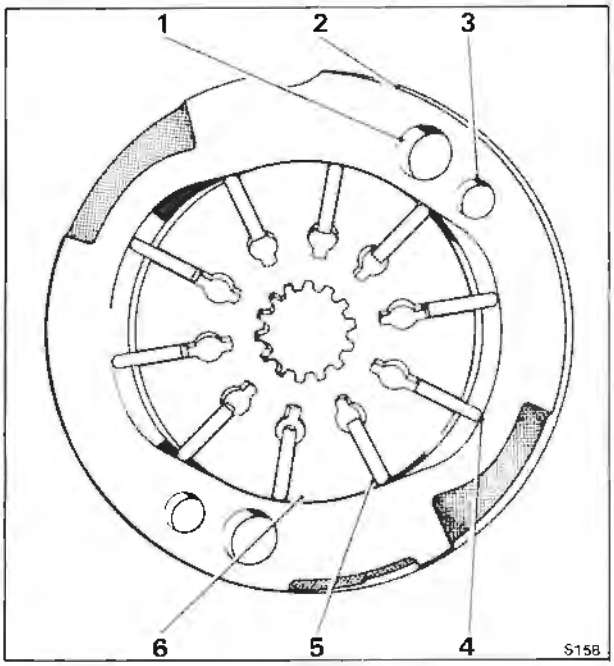

Fig. N22 Plan view. Rotor, vanes and pump ring
1 Oil transfer hole (2)
2 Pump ring
3 Dowel hole
4 Radiused edge of vane
5 Vane (10)
6 Rotor

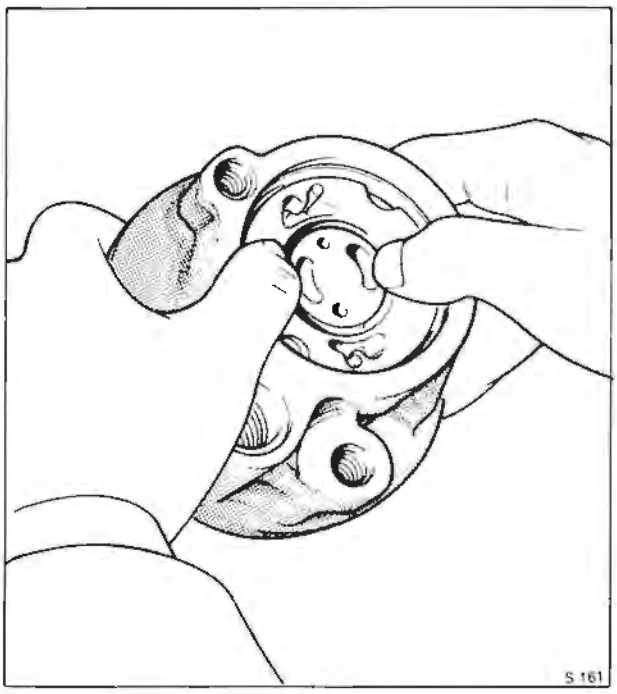

Fig. N23 Fitting the pressure plate

Printed in England
© Rolls-Royce Motors Limited 1977
April 1977
T.S.D. 4200

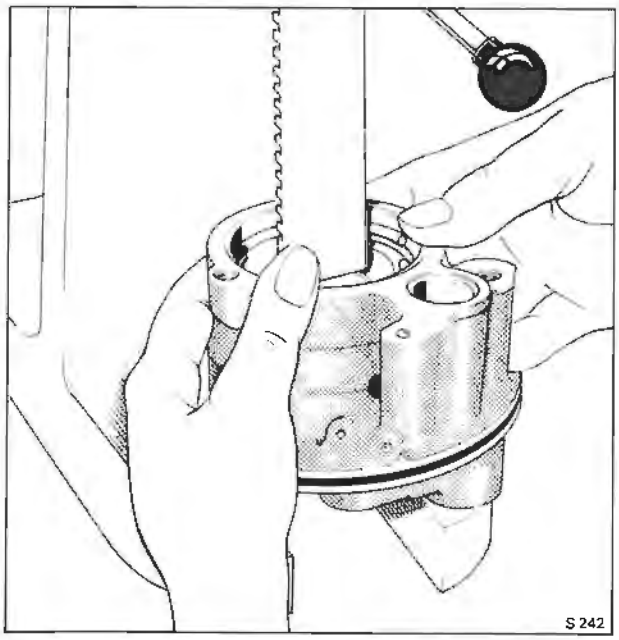

Fig. N24 Method of replacing end cap

Note
The reservoir must be fully seated prior to tightening the studs and union to prevent damage to the reservoir.

19. Fit the pump front mounting (adjusting) bracket using the three setscrews. Two of the three set-screws are fitted with distant pieces.

20. Press the pulley on the shaft using special tool (RH 9106).

Steering pump - To fit

1. Before attempting to fit the pump to the engine, check that all the steering system hoses and pipes are serviceable; renew any that are damaged or appear to have deteriorated.

Reverse the procedure adopted for the removal of the steering pump, noting the following points.

2. Prior to fitting the pump to the mounting brackets, connect but do not tighten the pressure pipe union (discharge) at the rear of the pump. Fit and tighten the hose clip to the rubber tube (reservoir return).
3. Ensure that the bolt distance pieces are fitted to their respective positions.

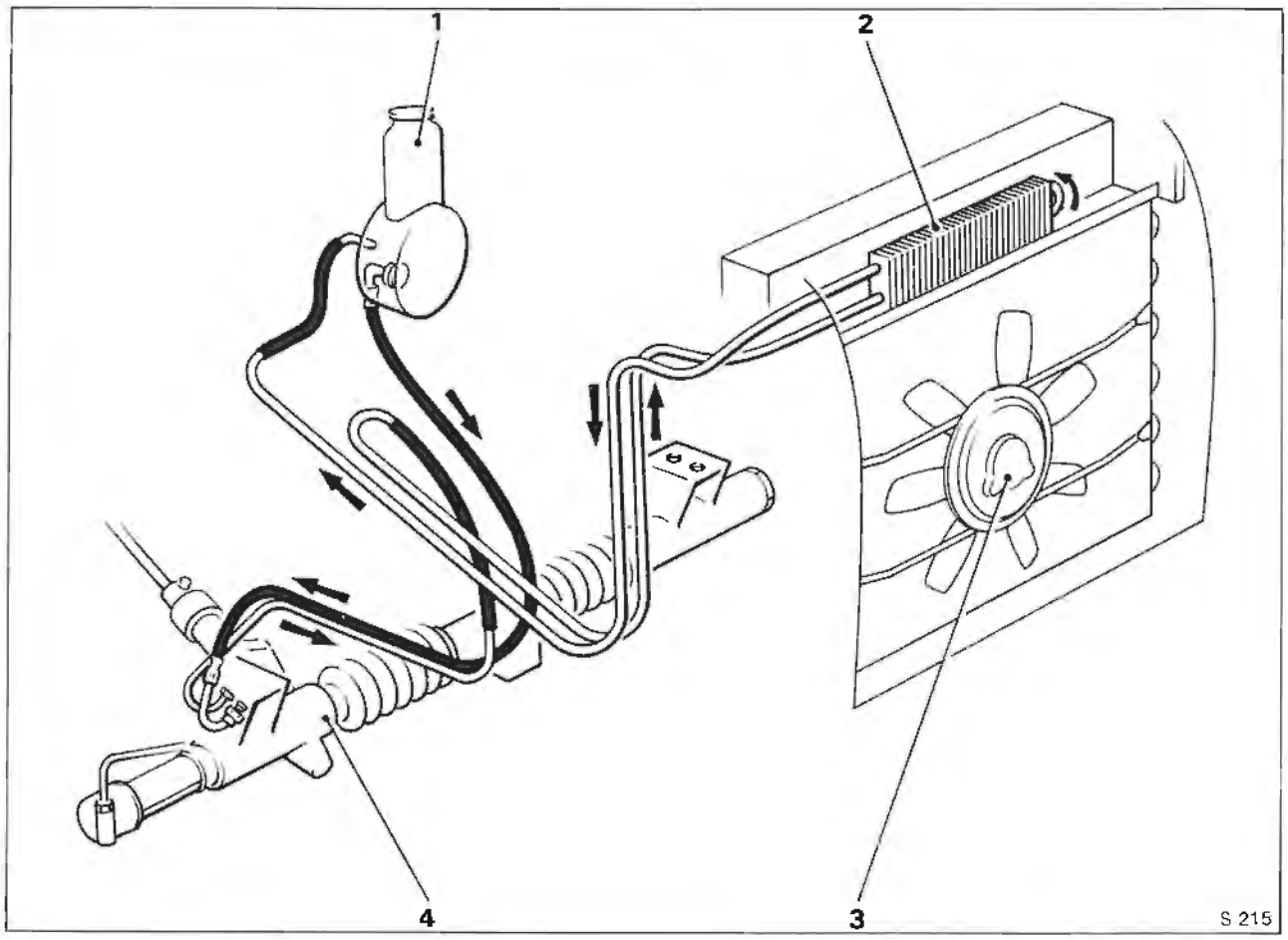

Fig. N25 Hydraulic pipe runs. Right-hand drive car

1 Steering pump
2 Fluid cooler
3 Booster fan
4 Steering unit

4. Fit and adjust the driving belts to the correct tension as described in 'Belt tension - To check'.
5. Fit and tighten the pipe union nut to the torque figures quoted in Chapter P.

Steering pump - Priming and filling

Important
When refilling an empty system it is essential that at no time when the engine is running the fluid level in the pump reservoir is allowed to drop sufficiently for air to be drawn into the system. If this occurs, irrepairable damage to the pump will result.

Use only approved fluid detailed in Chapter D - Lubricants.

1. Set the gear range selector to P and apply the parking brake.
2. Raise the front road wheels off the ground.
3. Remove the feed cables to the ignition coil to prevent the engine from firing when turned over using the starter.
4. Remove the reservoir filler cap. Add sufficient clean steering fluid to approximately 2,54 cm. (1 in.) from neck of reservoir.
5. Turn the engine, using the starter for approximately 30 seconds and continue to top-up the reservoir.

The fluid level drops very quickly therefore it is essential to ensure that it does not drop sufficiently for air to be drawn into the system. Continue this operation until the fluid level remains constant.

6. Replace the feed cables to the ignition coil, start the engine and ensure it is running at idle speed.
7. Very gently turn the steering wheel from side to side, gradually lengthening the stroke, but do **not** hold against the lock stop. Keep topping-up the system as the fluid level drops.
8. Allow the fluid to settle then top-up the reservoir to the 'FULL HOT' mark on the dipstick.
9. Steadily turn the steering wheel twice from lock to lock to expel any small amounts of air that may remain in the system.
10. Check the fluid level again and top-up if necessary.
11. Switch off the engine and lower the road wheels to the ground.

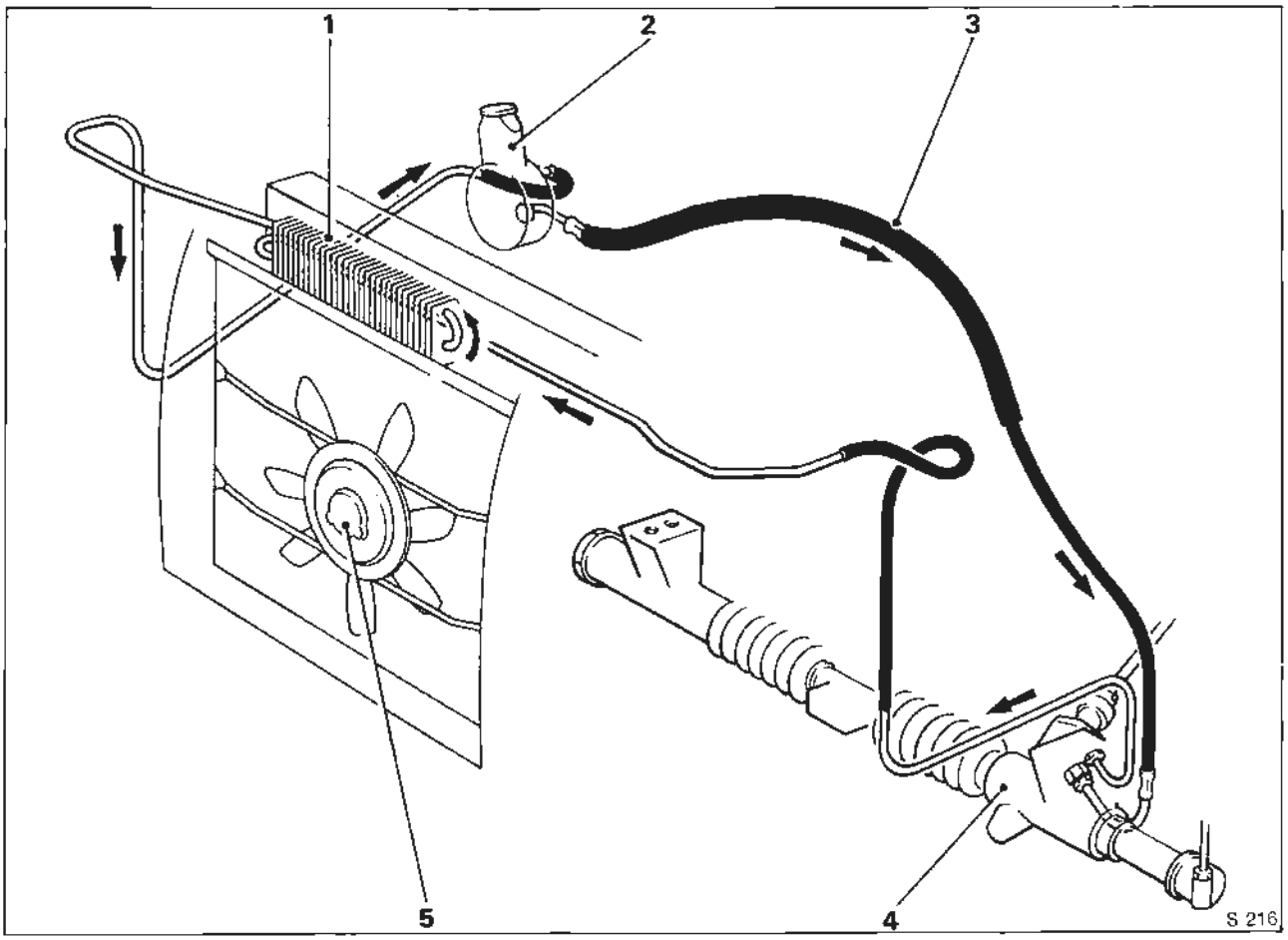

Fig. N26 Hydraulic pipe runs. Left-hand drive car
1 Fluid cooler
2 Steering pump
3 Protective Sorbo rubber
4 Steering unit
5 Booster fan

Printed in England
© Rolls-Royce Motors Limited 1980
March 1980
T.S.D. 4200

Metric steering pump
From car serial numbers, Silver Shadow II 0039524; Silver Wraith II 38916 *; Corniche 50334 and Camargue 0050352 including Camargue 0050298 and 0050350, the steering pump and all fittings, including attached pipework, will be metric.
* Certain Silver Wraith II cars between serial numbers 38655 and 38916 have had metric steering pumps fitted. Care must be taken on this range of cars to establish the type of pump fitted before work is attempted.

Section N3

Steering wheel and Gear range selector unit

Printed in England

© Rolls-Royce Motors Limited 1980

Introduction

The Silver Shadow II, Silver Wraith II and Bentley T2 steering wheel is a two arm composite metal fabrication with the hub, spokes and rim covered in black plastic, the rim having gripping nodules moulded into the underside. A metal collar attached by adhesive is fitted around the lower rim of the hub to shroud the centre boss. The self-cancelling stalk is welded to the lower rim of the spline.

This steering wheel is also fitted to Corniche and Camargue cars from car serial number Corniche 32633 to 50233 inclusive and Camargue 32035 to 50244 inclusive.

On Corniche and Camargue cars prior to car serial number Corniche - 32633 and Camargue - 32035 the spokes and horn button are completely covered with black leather. Though of a similar construction to the Silver Shadow II wheel it has a different fixing for the horn button and attachment to the steering column hub (see Fig. N29).

New style leather covered wheels are fitted to Corniche cars from car serial number 50234 and Camargue cars from car serial number 50245.

If the steering wheel needs to be changed, on a Corniche or Camargue car the new leather covered wheel can replace the plastic type. If however, it is necessary to replace the earlier leather covered wheel with the new leather covered wheel, then a kit of parts is available, from Rolls-Royce Motors Ltd, Spares Department, to affect the conversion.

Steering wheel - To remove (see Fig. N27) Silver Shadow II, Silver Wraith II and Bentley T2. Also Corniche and Camargue cars from car serial number Corniche 32633 to 50233 inclusive and Camargue 32035 to 50244 inclusive.

1. Disconnect the battery leads.

2. Unscrew and remove the trim fairing and knee roll pads adjacent to the steering column.

3. Unscrew the three chromium plated setscrews and carefully remove the polished veneer facia. **Protect the steering wheel from marks and scratching when dismantling.**

4. Dismantle the steering column cowling. Unscrew two screws to remove the upper moulding. Unscrew a further four screws to remove the lower moulding.

5. Unscrew and remove the gear selector unit, then the combined screen wash, indicator and headlamp flasher unit. Allow both units to hang carefully from their connecting wires.

Note

From car serial number 37513 the combined screen wash unit arm is reduced in length by approximately 6,35 mm. (0.250 in.).

6. Feed a 31 cm. (12 in.) length of strong thin string in a loop into the gap between the button push and plastic steering wheel surround to lay against the centre button push spindle.

7. Grip the two free ends of the string and with a sharp pull release the button push and withdraw the assembly. Retain the coil spring.

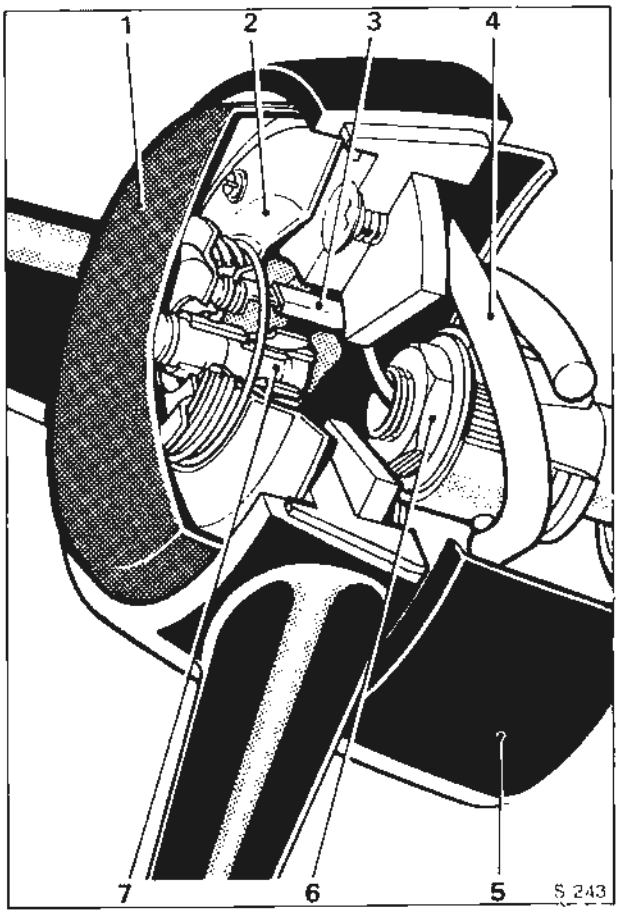

Fig. N27 Steering wheel components. Silver Shadow II, Silver Wraith II and Bentley T2

1 Horn button
2 Support plate
3 Connector
4 Energy absorbing device
5 Metal shroud
6 Column nut
7 Bearing pin

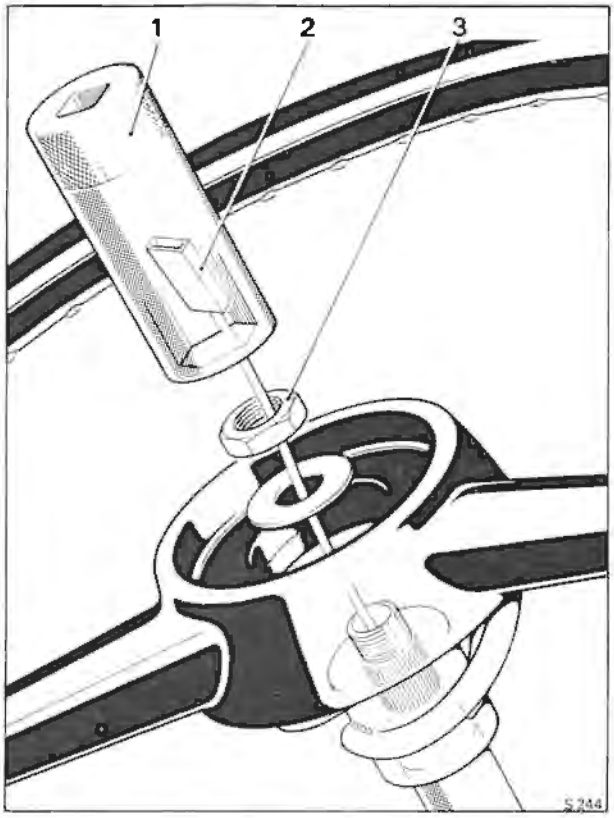

Fig. N28 Use of deep socket on steering wheel nut
1 Deep body hexagon socket
2 Connector
3 Steering wheel nut

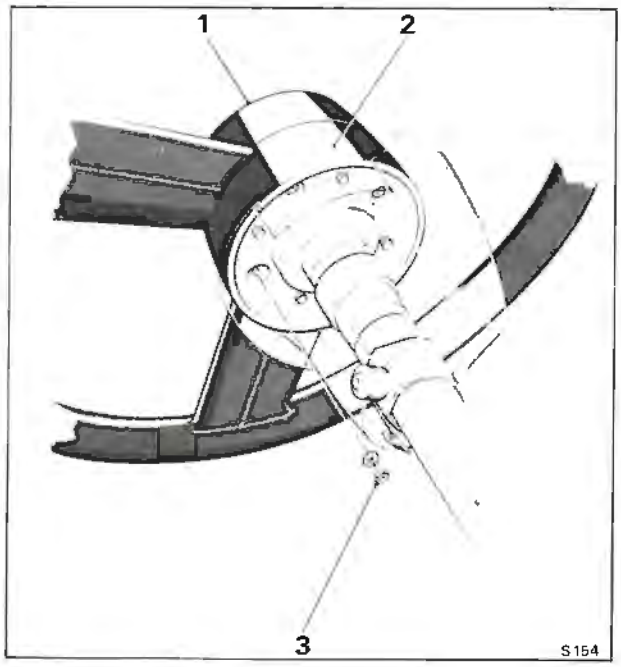

Fig. N29 Horn button removal. Prior to car serial numbers Corniche 32633 Camargue 32035
1 Horn button
2 Wheel hub
3 Nut and washer

8. Unscrew and remove the support plate taking care to disconnect the cable attached to the underside of the plate.
9. Remove the steering wheel centre nut and washer using a ⅝ in. A/F, deep body, hexagon socket spanner (see Fig. N28).

Important
Feed the horn wire and connector into the spanner body to ensure no pinching of the wire occurs. On no account should a bi-hexagon socket spanner be used due to the restricted length of the bore.
10. Scribe a mark across the steering wheel lower boss and inner column rim to ascertain the correct relationship of wheel to column splines.
11. Grip the steering wheel spokes and using a straight pull remove the wheel taking care not to damage the splines.

The wheel assembly must be removed as one unit. No part dismantling is advised.

12. Inspect support plate, contact rivet, cable connector, the bearing pin attached to the underside of the horn button and the return spring.

Steering wheel - To remove
Corniche and Camargue prior to car serial number Corniche - 32633 Camargue - 32035
Protect the steering wheel from marks and scratching when dismantling.
1. Remove the gear range selector cowling, which is in two pieces, by unscrewing and removing the six recessed slot mushroom head setscrews located in the cowl lower half. The upper section of the cowl is secured by the four outer screws and the lower section by the remaining two setscrews.
2. Unscrew the four nuts located behind the steering wheel and remove the horn button assembly from the steering wheel centre.(see Fig. N29)
3. Withdraw the horn contact plate and disconnect the electrical plug.
4. Unlock the tab washer then unscrew and remove the nut which secures the steering wheel to the column.
5. Before removing the wheel, the centre of the column and the steering wheel inner boss face should be suitably marked to ensure that the wheel is replaced in the same relative position on assembly.
6. Replace the nut to prevent possible damage to the threaded end of the column, then, using special tool (RH 7870), extract the wheel. Remove the tool and the wheel securing nut and lift away the wheel.

Gear range selector unit - To remove (Fig. N30)
1. Disconnect the battery.
2. Unscrew the two outer mid-positioned set-screws from the lower cowl and remove the upper cowl.
3. Unscrew the two clamps holding the lower cowl and remove the cowl. Screw the clamps back onto the cowl before placing aside.

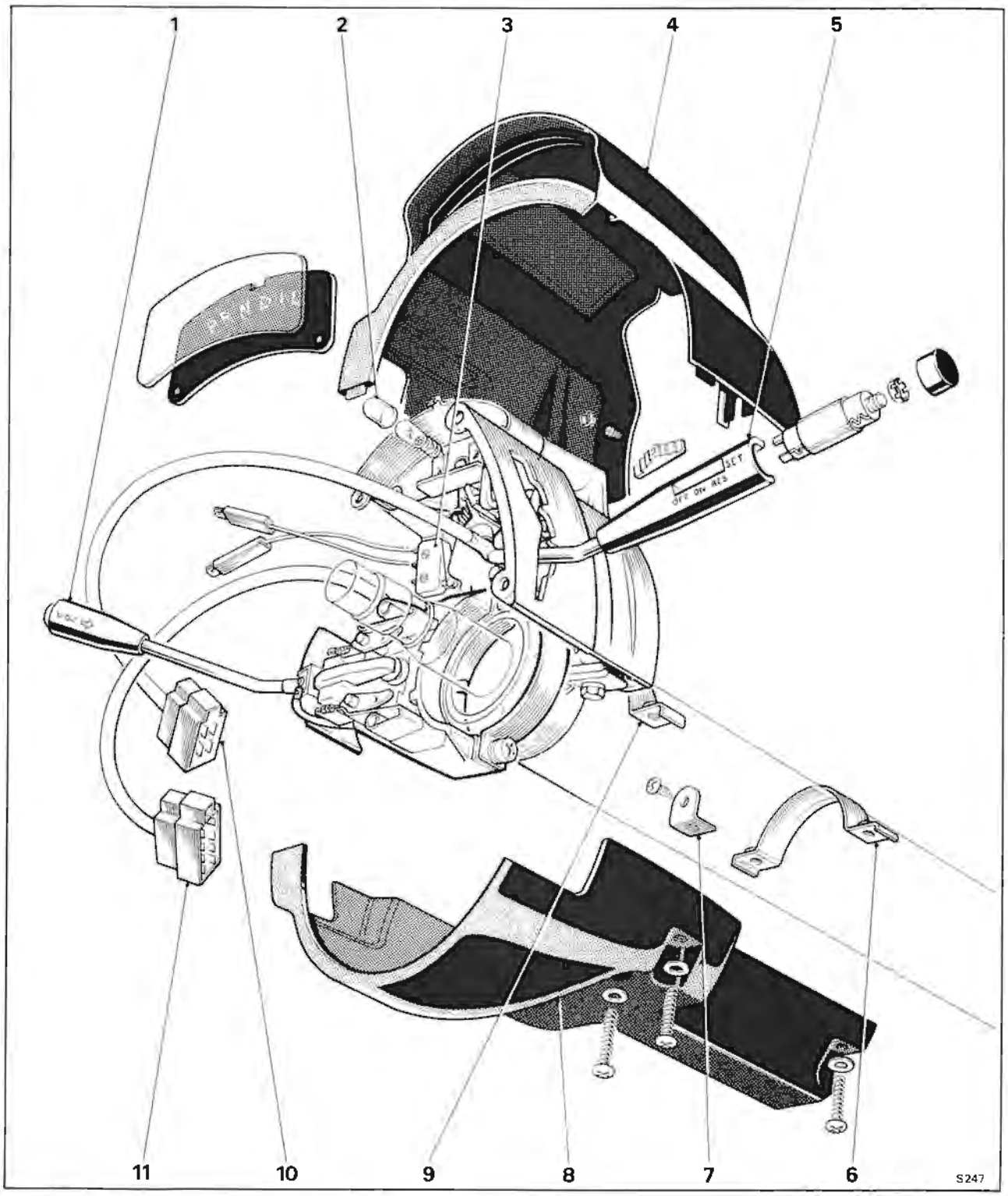

Fig. N30 Cowl, gear range selector and wash unit

1 Indicator and washer switch unit
2 Bulb filter
3 Micro switch
4 Upper cowl
5 Gear range selector and Speed control system switch
6 Rear clamp - lower cowl
7 Upper to lower cowl angle bracket
8 Lower cowl
9 Front clamp - lower cowl
10 Socket - speed control switch wiring
11 Socket - indicator and washer switch wiring

Printed in England

© Rolls-Royce Motors Limited 1979

November 1979

T.S.D. 4200

4. Disconnect the main loom wiring block (4-way) and the two single Lucar connectors to the micro-switch, situated behind the instrument panel.
5. Remove the gear range selector.

Gear range selector unit - To dismantle

1. Remove the screws securing the micro-switch mounting plate to the front face of the base assembly.
2. To remove the scale pointer, set the selector lever to (I) range exposing the single setscrew. Remove the pointer then replace the setscrew with any packing washers back into the selector quadrant.

Care must be taken not to scratch the pointer or the indicator scale.

3. Remove the two recessed head screws and shake-proof washers securing the indicator support bracket to the two bosses on the base assembly, then remove the indicator support bracket assembly.
4. Remove the two hexagon-headed 3 B.A. screws securing the gate assembly to the underside of the base.
5. Remove the circlip, clevis pin and spring securing the gear selector lever to the quadrant, then remove the lever with the gate assembly attached.
6. Remove the two recessed head screws securing the phosphor - bronze contact to the base plate. Retain the two insulating dowels and the two insulating strips.
7. Remove the circlip from the other end of the rocking arm.
8. Remove the rocking arm to quadrant, tension springs; detach the rocking arm assembly.

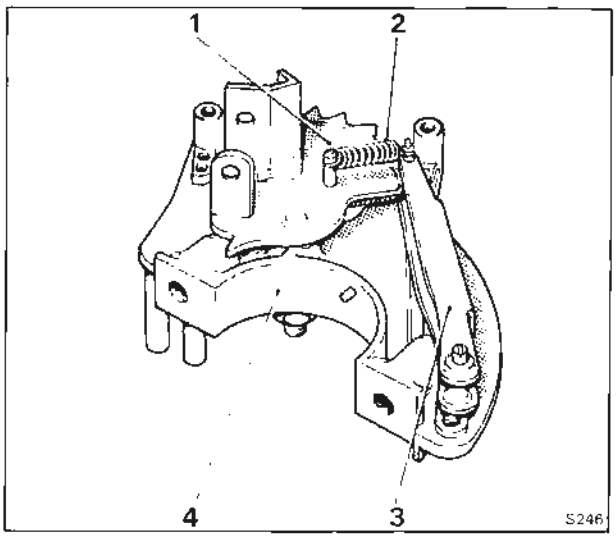

Fig. N31 Quadrant to rocking arm assembly

1 Gear selector quadrant
2 Tension spring, rocking arm
3 Rocking arm
4 Base casting

9. Remove the ¼ in. U.N.F. nut and washer from the quadrant spindle and remove the quadrant assembly from the base assembly.

Gear range selector unit - To assemble

1. Fit the quadrant assembly onto the base and nip the ¼ in. U.N.F. nut and washer onto the spindle. Check that the quadrant is free to rotate.
2. Remove the quadrant and lubricate the spindle with Ragosine 204G grease or its equivalent. Fit the quadrant and finally tighten the ¼ in. U.N.F.nut.
3. Do not overtighten the nut, since the bearing boss tends to spread slightly and a tight bearing may be formed.
4. Fit the rocking arm assembly, then check to ensure that the roller lines up correctly with the quadrant detent form (see Fig. N31)
5. Fit the two small coil springs between the spindle protruding through each side of the quadrant and the spindle through the centre of the rocking arm roller. Assembly is easier if the quadrant is rotated anti-clockwise, clear of the rocking arm, so that the springs are not under tension.

Note

Do not fit the retaining clip to the rocking arm at this stage.

6. Move the quadrant to a mid-way position and fit the phosphor-bronze contact. This contact is assembled between two insulating strips which are located by two insulating dowels; secure by two setscrews and washers.

Important

Extreme caution must be taken with the moving contact, so that it is not bent or damaged.

7. Before fitting the selector lever assembly carry out the following:

a. Check that the clevis pin will slide through both the fork end on the lever and the holes in the mounting arms on the quadrant.
b. Check that the fork end will also slide between the arms.

8. Lightly smear Ragosine 204G grease or its equivalent, on the bearing surfaces of the selector lever fork, the inside of the supporting arms and the clevis pin.
9. Loosely fit the selector lever through the gate assembly, then locate the fork and spring between the support arms. Fit the clevis pin and secure with the circlip. Check that the lever will return easily under the load of the spring.
10. Secure the gate assembly to the underside of the base by means of the two hexagon-headed 3 B.A. screws. Check that, when the position of the lever is controlled by the detents, it lines up with the profile of the gate liner and that the extreme positions of the lever are limited by the gate.
11. Fit the insulating plate complete with feed and supply contacts.

When the unit is secured, check that the inside leg of the moving contact is disposed centrally across the supply contact and that the pressure is correct when a piece of 0,025 mm. (0.001 in.) paper

is 'nipped' between the contacts. At the extremities of its travel the hemispherical head must still touch the supply contact.

This adjustment is most important, to ensure accurate spring weight during travel of the moving contact.

12. Each selection should then be made in turn, checking that the outside leg on the moving contact lines up correctly with each of the feed contacts.

13. Press the blue plastic filter cap over the bulb. Fit the indicator scale over the support bracket and secure with two self-tapping screws. The scale should drop onto the bracket and its lip must not be forced down.

14. Feed the pointer under the indicator scale; then with (I) range selected and using a small cross-blade screwdriver, feed the single 5 B.A. screw through the pointer leg into the quadrant boss together with any original packing washers replaced. Care should be taken not to mark either the pointer or the indicator scale.

15. Full selection should then be made and the alignment of the pointer checked.

16. As a sub-assembly, fit the neutral start micro-switch loosely to the mounting plate. Fit this sub-assembly to the base assembly.

17. With the selector quadrant set in the (N) Neutral position adjust the micro-switch roller to the peak of the cam. This setting should automatically fix the (P) Park position.

A simple battery powered test box, operating a buzzer or lamp, attached to the micro-switch Lucar connectors will indicate when a correct setting has been achieved.

Gear range selector unit - To fit

Refer to Operations 1 to 6 of Steering wheel - To remove, Silver Shadow II, for the sequence of removing the trim, the gear selector unit and the combination wash/indicator/flasher unit.

Reverse the procedure for removal giving consideration to the following points.

1. Check that the combination screen wash/indicator unit is located and secured before fitting the selector unit.

2. Replace the upper and lower cowl moulding onto the steering wheel, loose enough to allow manual centralising of the assembly in relation to the gear range pointer and selector lever.

3. Remove the top cowl and secure the lower cowl, when suitably positioned. Fit the top cowl.

4. Finally, assemble the instrument facia panel, trim fairing and knee roll pads.

Steering wheel - To fit

Silver Shadow II, Silver Wraith II and Bentley T2. Also Corniche and Camargue from car serial number Corniche 32633 to 50233 inclusive and Camargue 32035 to 50244 inclusive.

Protect the steering wheel from marks and scratching when assembling.

1. Feed the connector and wire through the steering wheel centre boss then align the boss to the marks on the lower boss and inner column rim, locating firmly on the splines.

2. Replace the washer and centre nut then using the $\frac{7}{8}$ in. A/F, deep body, hexagon socket spanner torque tighten the assembly to the figures quoted in Chapter P. Carefully feed the shroud and wire into the spanner body (see Fig. N28).

If any adjustment of the straight ahead position is necessary, the procedure shown in Steering link - To remove and fit, Section N4, should be carried out.

3. Check that the self-cancelling stalk contacts the flasher switch arms and that the end of the stalk does not foul the gear selector lever when this is in the (L) position.

4. If a foul exists, the self-cancelling stalk must be filed down to clear the gear selector lever.

This procedure must take place when a new steering wheel is fitted, or the existing wheel is replaced.

5. After filing, the exposed metal must then be painted in a dull nickel colour.

6. Plug the centre wire into the connector attached to the underside of the support plate and secure the plate to the centre hub.

7. Lightly lubricate the bearing pin of the horn button with Rocol 204G Ragosine grease or equivalent making sure that the 'necked' portion of the bearing pin clips securely over the retaining spring.

8. Fit the combined screen wash unit switch onto the steering column using the locating stud. Secure in position.

9. Locate the gear range selector onto the column by its locating stud and secure.

Note

The screen wash unit switch must be replaced first otherwise access to the securing screws of this unit is covered by the gate of the gear selector unit.

10. Fit the upper and lower cowl mouldings onto the steering wheel loose enough to allow manual centralising of the assembly in relation to the gear range pointer and lever. Remove the top cowl and secure the lower cowl when suitably positioned.

11. Locate the top cowl onto the lower cowl and secure.

12. Finally, assemble the instrument facia panel, trim fairing and knee roll pads. Replace the knurled connector (purple/black wire) and Lucar (black wire) to the steering column.

Steering wheel - To fit

Corniche and Camargue prior to car serial number Corniche - 32633 Camargue - 32035

Protect the steering wheel from marks and scratching when assembling.

1. Feed the connector and wire through the steering wheel centre boss. Align the marks on the boss and end of the steering column. Locate the wheel firmly on the splines.

2. Fit the tab washer, then tighten the centre nut to the torque figures given in Chapter P. Ensure

Printed in England
© Rolls-Royce Motors Limited 1979
December 1979
TSD 4200

the horn wire is not nipped when the torque spanner is fitted.

If any adjustment of the straight ahead position is necessary, the procedure shown in Steering link - To remove and fit, Section N4, should be carried out.

3. Check that the self-cancelling stalk contacts the flasher switch arms and that the end of the stalk does not foul the gear selector lever when this is in the (L) position.

4. If a foul exists, the self-cancelling stalk must be filed down to clear the gear selector lever.

This procedure must take place when a new steering wheel is fitted, or the existing wheel is replaced.

5. After filing, the exposed metal must then be painted in a dull nickel colour.

6. Fit the centre wire into the connector attached to the underside of the horn contact plate Secure the contact plate to the centre boss.

7. Feed the four long bolts and spacers attached to the horn button assembly, through the steering wheel boss and secure on the underside with 2 BA full nuts and plain washers.

8. Replace the knurled connector (purple/black wire) and Lucar (black wire) to the steering column if these have been removed.

9. Fit the combined screen wash unit onto the steering column using the locating stud. Secure in position.

10. Locate the gear range selector onto the column by its locating stud and secure.

Note

The screen wash unit must be replaced first, otherwise access to the securing screws of this unit is covered by the gate of the gear selector unit.

11. Fit the upper and lower cowl mouldings onto the steering wheel loose enough to allow manual centralising of the assembly in relation to the gear change pointer and lever. Remove the top cowl and secure the lower cowl when suitably positioned.

12. Locate the top cowl onto the lower cowl and secure.

13. Finally, assemble the instrument facia panel, trim fairing and knee roll pads.

Printed in England

© Rolls-Royce Motors Limited 1978

March 1978

T.S.D. 4200

Section N4

Steering column

Upper steering column - To remove with steering wheel and lower link dismantled

The upper steering column is an energy absorbing unit. It comprises a lower extension and is fitted with a three point fixing bracket, spot welded on to the outer casing. Anti-vibration rubber mountings secure the column to under-facia steelwork whilst the lower end of the unit is fitted through a large rubber grommet and fastened to the toeboard by a circlip.

1. With the facia components dismantled, remove either the 4 in 1 instrument or the speedometer, to gain access to the steering column fixing behind the instrument panel. Carefully allow the instrument to hang from its connecting wires.
2. Slacken the two ⅜ in. U.N.F. socket head cap screws from the steering column upper mounting. Hold the tapping block and heavy washers through the instruments aperture.
3. Release the cap screws and extract the block and washers from behind the panel. Place components safely aside.
4. Replace the panel instrument.
5. Remove the large circlip and washer from the engine compartment side of the toeboard (see Fig. N33)
6. Unscrew and remove the knurled connector (purple/black wire) and unclip the Lucar connector (black wire) attached to the steering column.
7. From inside the car, support the column and release the single ⅜ in. U.N.F. socket head cap screw from the lower mounting. Retain the screw and washers but discard the nut.
8. From the driving position withdraw the steering column through the toeboard rubber grommet.
9. Inspect for worn and damaged components.

Note

Care should be taken when manoeuvering the column inside the saloon to avoid damage to the woodwork and trim.

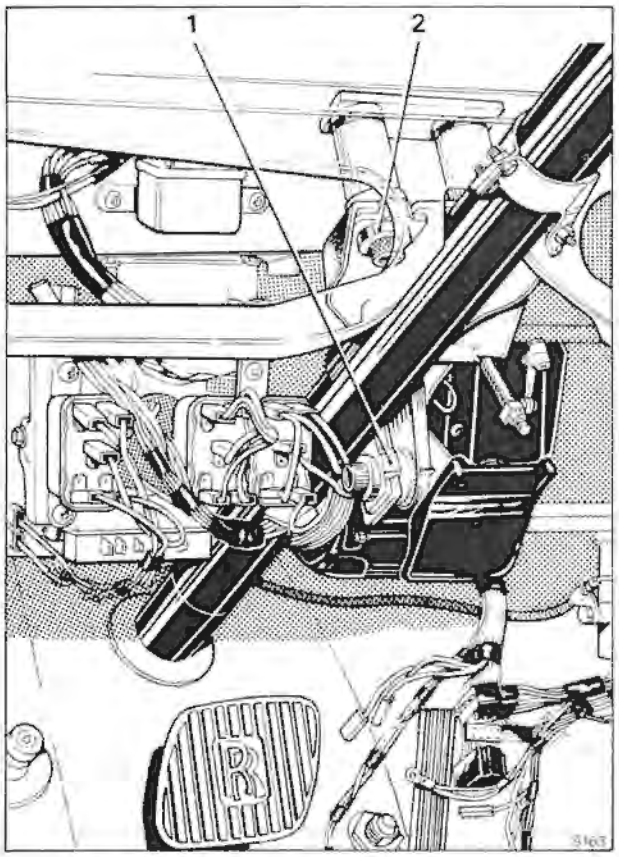

Fig. N32 Steering column in position

1 Lower mounting point
2 Upper mounting point

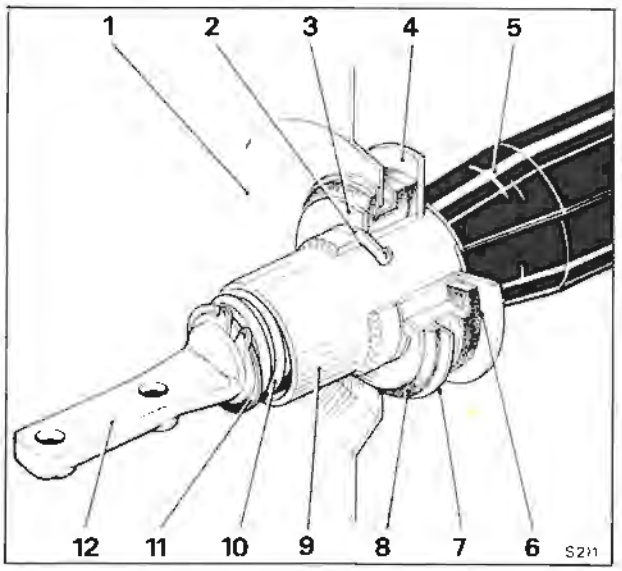

Fig. N33 Toe-board fixing

1 Toeboard bulkhead
2 Circlip
3 Washer
4 Flange
5 Plastic cover
6 Soft rubber washer
7 Bulkhead reinforcement
8 Bulkhead grommet
9 Main tube
10 Spring
11 Washer and circlip
12 Linkage arm

Upper steering column - To fit

Reverse the procedure for removal giving consideration to the following points.

1. Before replacing the column into the toeboard a new rubber grommet and foam washer should be fitted.

2. Ensure that when replacing the two upper socket head cap screws the spigot rubbers and inner metal tube are not disturbed. Torque tighten to the figures given in Chapter P.

3. Locate a new nut to the column lower mounting, then finger tighten the cap screw until the washer just binds against the column locating capsule.

4. At this point check if the original slotted washer will make up the gap between the capsule and support bracket.

5. If a larger gap is apparent, measure this with feeler gauges and substitute the number of washers as necessary, using the following example.

With a measured gap of between zero and 0,35 mm. (0.014 in.), only one adjusting washer

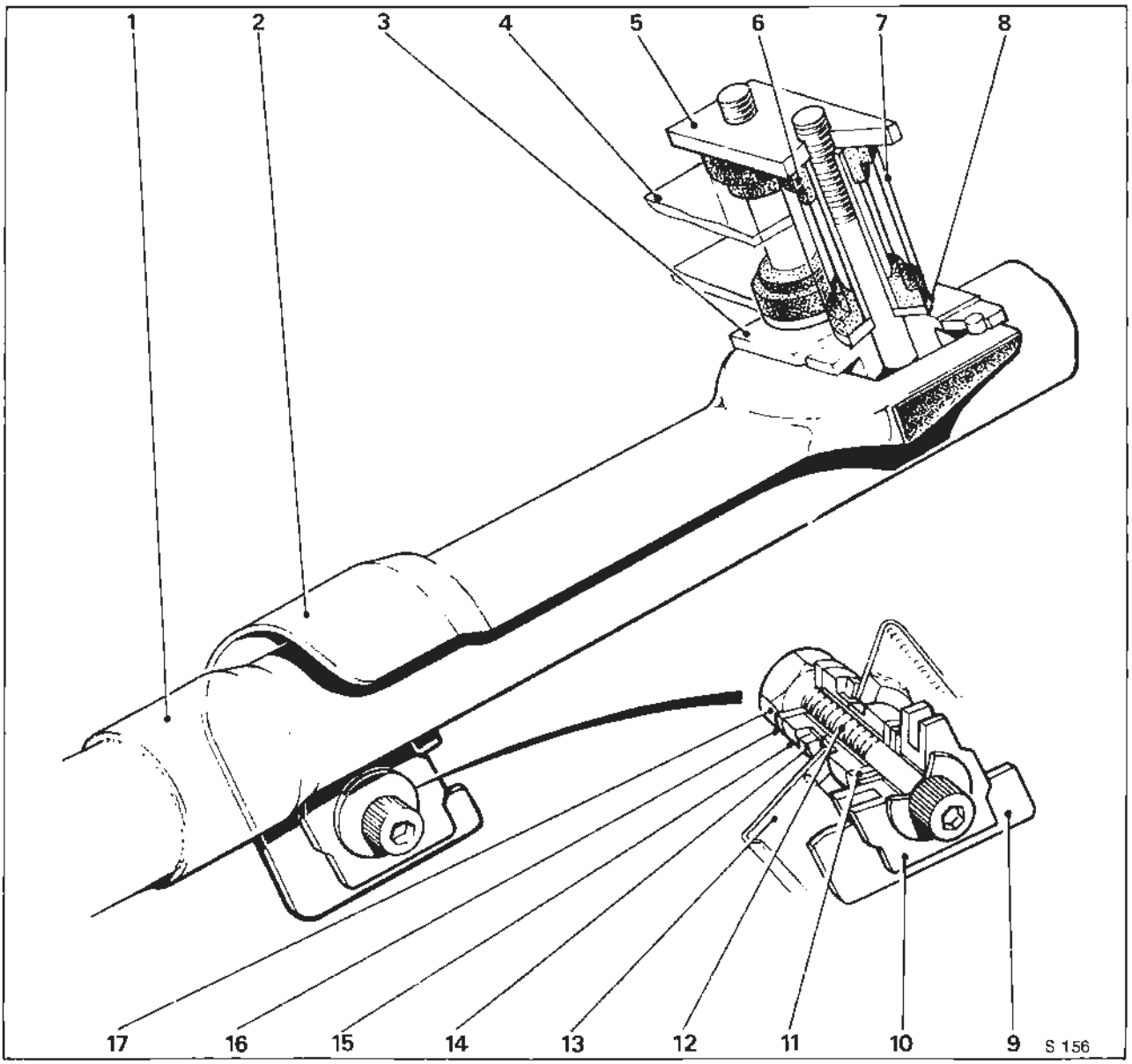

Fig. N34 Column mounting points

1 Outer tube
2 Column mounting attachment
3 Captive alloy washers (2)
4 Bulkhead support
5 Tapped plate
6 Flanged bush (Rubber)
7 Distance tube
8 Plain washer
9 Lower flange
10 Captive alloy washer
11 Shim washers (as required)
12 Distance tube
13 Bulkhead support and welded bush
14 Plain washer
15 Flanged bush (Rubber)
16 Plain washer
17 Nut

will be necessary. With a large gap necessitating more than one washer, the following calculation can be applied.

Measured gap divided by 0,35 mm. (0.014 in.) = Number of washers required to complete the assembly.

Slotted adjusting washers are manufactured from 22 S.W.G. 0,70 mm. (0.028 in.) material, the size designed to compensate for the 0,70 mm. (0.028 in.) compression of the spigot rubbers.

Steering link - To remove and fit (Fig. N35)

The lower link unit comprises an upper safety stalk and bonded coupling attached to a universal joint and shaft splined at the lower end. The shaft connects with a lower universal joint which in turn is secured to the pinion box.

Warning

Do not use impact force to remove any joint on or near to the steering unit. Irreparable damage to the unit, could result.

1. With the rack and pinion unit removed from the suspension, release the two bolts securing the upper link to the steering column extension unit and carefully lower from under the car.
2. Remove the heat shields and inspect universal joints and bonded coupling.
3. Detach the bonded coupling from the flanged yoke to inspect the safety stalk.
4. Release the pinch bolt nolding the lower universal joint to the intermediate shaft. Dismantle.

At this stage, inspect the splines, screw threads, bonded coupling and universal joints for wear, to ensure new parts are fitted where necessary.

5. When fitting the upper link to the bonded coupling, torque tighten the two bolts to the figures quoted in Chapter P.
6. Fit heatshield onto protruding bolt threads fitted in operation 5 and secure with washers and half nuts torque tightened to the figures quoted in Chapter P.
7. Fit the intermediate link flange to the bonded coupling with safety stalk positioned and special button headed bolts torque tightened to the figures quoted in Chapter P. Ensure washers are fitted between the bonded coupling and the safety stalk base plate.
8. Replace the intermediate shaft to lower link, ensuring the cut-away in the spline is in horizontal relation to the pinch bolt which should be finger tightened. Place the heat shield in position.

The upper and lower link assembly, can now be installed.

Note

To set the steering wheel in a straight ahead. position, it may be necessary to offset the linkage in the adjustment, by one spline at the steering wheel (36 splines) and the pinion box (48 splines).

9. With the road wheels in the straight ahead position use the centring plug (RH 9119) to ensure the setting mark drilled into the steering rack is centrally disposed in the blanking plug aperture.
10. Replace the blanking plug.
11. Check that the steering column lower extension machined face is lying horizontal and facing upwards.
12. Fit the steering wheel on the nearest spline to the straight ahead position then adjust by turning the wheel slightly to give an exact setting.
13. Align the upper link to the lower extension face, then feed the lower splined clip over the pinion box spline and nip together with the pinch bolt and castellated nut.
14. Check at this stage if the upper link and lower extension faces are parallel. Any further adjustment must be made using the procedure shown in operations 12 and 13.

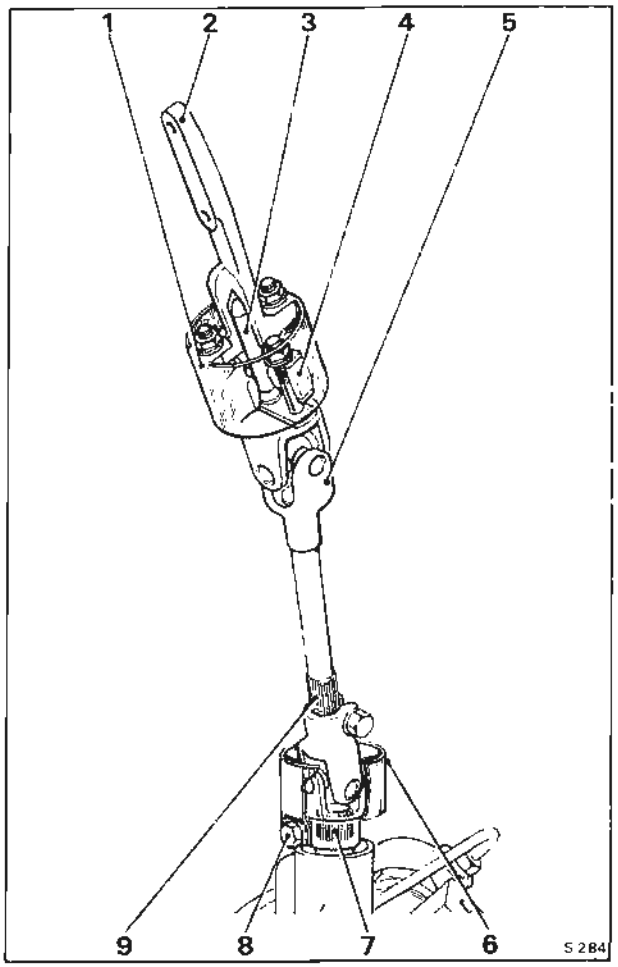

Fig. N35 Column to steering unit linkage

1 Heatshield
2 Link to column connector
3 Safety stalk
4 Bonded coupling
5 Universal joint
6 Heatshield
7 Spline
8 Pinch bolt
9 Adjustable spline

Printed in England
© Rolls-Royce Motors Limited 1978

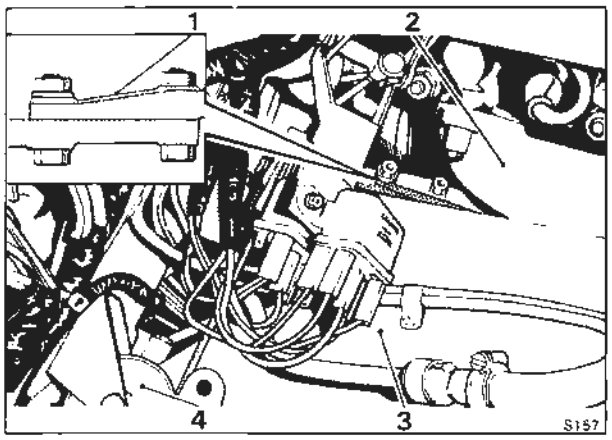

Fig. N36 Steering column extension to lower link
1 Column to link attachment (and inset)
2 Exhaust manifold
3 Right-hand valance panel
4 Pulley to speed control unit

15. Torque tighten the lower pinch bolt and castellated nut. Use the torque tolerance to allow the fitting and securing of a new split pin.
16. Fit the two bolts into the underside of the steering column lower extension.

Fit a **nut** to the bolt adjacent to the bonded coupling and a **nut and washer** to the bolt adjacent to the toe-board (see Fig. N36 - Inset).

Torque tighten to the figures quoted in Chapter P.
17. Fit and torque tighten the steering wheel column nut.

Refer to Chapter P for the above torque tightness figures.

Section N5

Steering linkage

Introduction

Steering linkage to the road wheels is by track rods attached with ball pin joints to the rack and pinion inner bracket at the centre and the side steering levers at the hubs.

Toe-in is readily adjusted by screwed connectors situated between the inner and outer track rod components. This function does not require the withdrawal of the hub ball joint. Grease nipples are fitted to all four ball pin locations.

Adjustable track rod units - To remove

1. Turn the steering unit onto full lock in any one direction.
2. Remove the split pin, castellated nut and washer from the ball pin assembly.
3. Using special tool (RH 8100) release the ball joint taper and withdraw this from the inner ball joint bracket.
4. Turn the steering unit onto full lock in the opposite direction and using the same procedure, withdraw the opposite ball joint.
5. Remove the split pins, castellated nuts and washers from the outer track rod ball joints.
6. Support the track rod, then using special tool (RH 8080) withdraw the outer ball joints from the side steering levers and remove the track rods from beneath the car.
7. Inspect the ball joint units and replace if necessary

Ball pin unit - To remove

1. Unscrew and remove the hexagon headed plug from the track rod end socket.
2. Using circlip pliers remove the clip and sealing boot then the ball pin.
3. Discard the unit.
4. Clean out the track rod socket using 'Genklene' or an equivalent solution.
5. Inspect internal surfaces for damage.

Track rod socket - To renew

If at this stage of dismantling the socket was found to be damaged, check the number of turns required to remove the damaged socket and to set the new socket into the approximate position. The final toe-in setting can be made only when the track rod assembly has been fitted into the car.

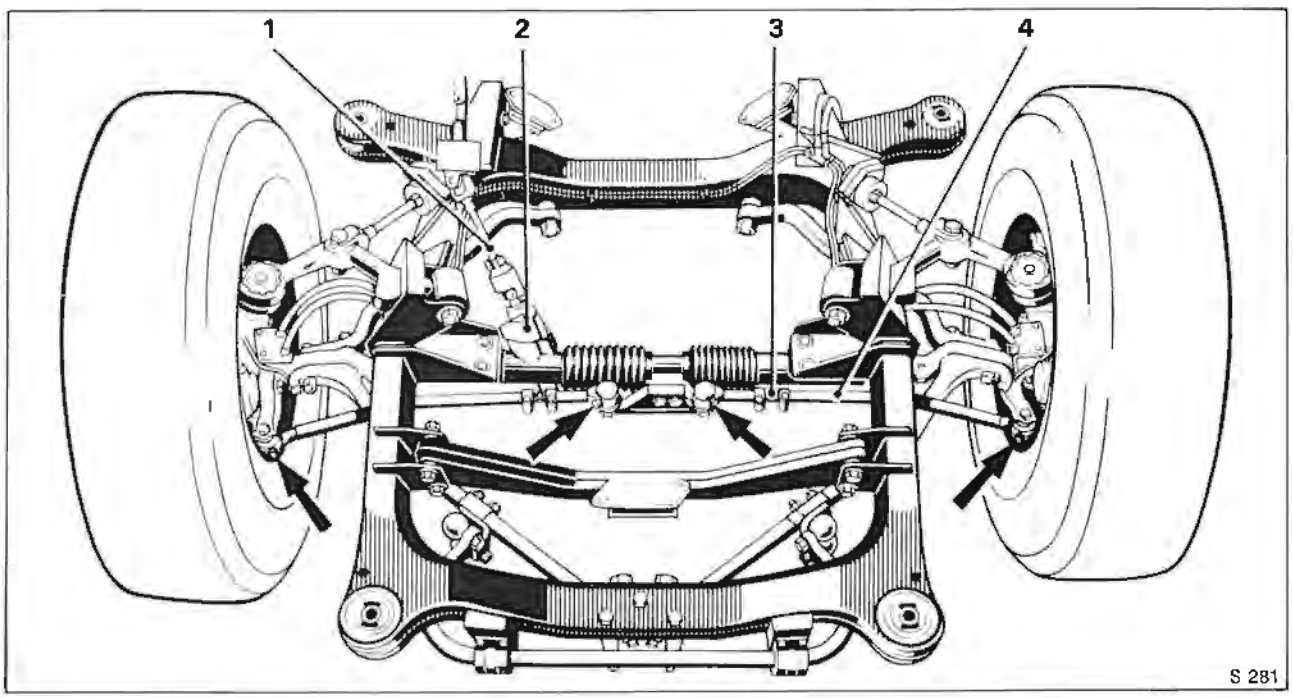

Fig. N37 Steering linkage

1 Lower link unit
2 Spool valve and pinion box
3 Track rod adjuster
4 Outer track rod
➡ Grease points

Printed in England
© Rolls-Royce Motors Limited 1978
March 1978
T.S.D. 4200

Ball pin unit - To fit

1. Place the ball pin components into the track rod socket in the following sequence, lightly lubricating each component with an approved grease.
2. Fit the taper pin through the rectangular hole with the shoulder bearing on the inner seat.
3. Smear the ball seat with approved grease and fit the ball bearing, spring seat, spring, alloy joint washer and finally the retaining plug.
4. Apply Rocol T 265 grease to the seal faces of the ball joint then fit the rubber seal with its assembled lower retaining clip, coil spring and upper seating.

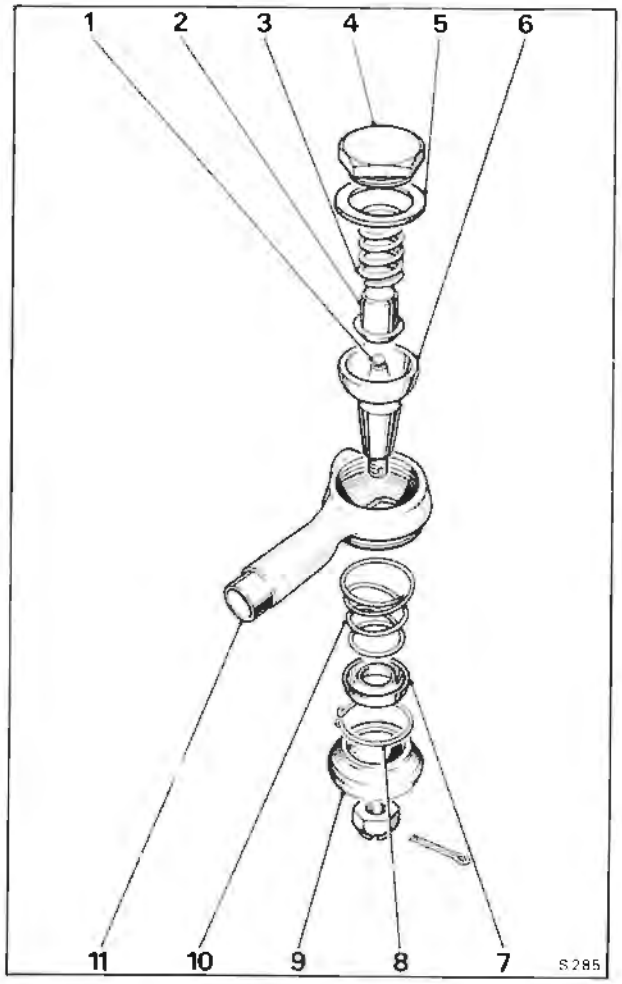

Fig. N38 Ball pin unit. Exploded view

1 Ball bearing
2 Spring seat
3 Ball joint spring
4 Screwed plug
5 Alloy washer
6 Ball pin
7 Spring seat
8 Retaining spring
9 Dust cover
10 Dust cover expander
11 Track rod ball joint housing

5. Locate the clip and lower edge of the rubber seal under the lip of the track rod socket.
6. Fit the grease nipple into position then lubricate the assembly with approved grease, until it exudes from the seals.
7. Each joint will require approximately 9,5 gms. (0.66 oz.) of grease for an initial filling operation.

Adjustable track rod units - To fit

Clean the taper connections in the side steering levers, the centre ball joint bracket and the ball joint units assembled in the track rods.

1. Lightly smear the bearing surfaces before offering the assembly up to the steering unit.
2. Fit the inner ball joint down into the centre bracket and the outer ball joint up into the side steering lever socket.
3. Secure the ball joints with new castle nuts and split pins. Tighten the ¾ in. U.N.F. (1 ⅛ in. A/F) nuts to a torque tightness figure quoted in Chapter P using the tolerance to align the split pin holes.

Front wheel toe-in - To adjust

1. Place the car on a level surface and set the steering wheel in the straight ahead position.
2. Remove the gear selector thermal cut-out, as described in Chapter M - Electrical System.
3. Move the car forward a full half revolution of the road wheels. Moving the car backwards instead of forward will give an incorrect reading.
4. Take a reading using optical alignment equipment.
5. Move the car forward a further half revolution of the road wheels and take a second reading. An average of the two readings will give the true toe-in figure.
6. If setting is necessary slacken the two pinch bolts securing the track rod adjusters and rotate these to bring the wheels into the straight ahead position (zero toe-in).
7. Rotate the adjusters by equal amounts on each side to give an overall toe-in figure of between 0° 7' and 0° 17' (1/32 in. and 3/32 in.) with the car in a 'levelled' or 'showroom' condition (see Chapter H Section H5).
8. Tighten the pinch bolts then re-check the toe-in as shown in Operations 4 and 5.
9. Torque tighten the pinch bolts to the figures quoted in Chapter P.

Section N6

Fault diagnosis

Malfunction	Possible cause	Action
Steering pump and reservoir		
Hydraulic fluid leaks	Reservoir cover seal or filler cap seal leaking due to fluid level being too high or air in fluid	Check oil level and top-up if required. Bleed system to remove air by operating steering. Examine cap and cover for damage or distortion.
	Reservoir to pump 'O' rings leaking	Renew 'O' rings
	Flow control valve plug 'O' rings leaking	Renew 'O' rings
	Steering pump bearing seal leaking	Renew seal. Examine shaft for wear or damage
	Reservoir or filler cap seals damaged	Renew seals
Momentary increase in effort when turning wheel quickly to right or left	Low fluid level in reservoir	Check fluid level. Top-up if required. Examine system for leeks
	Pump drive belt(s) slipping	Correctly adjust pump drive belt(s)
	Heavy internal fluid leak	Check pump outlet pressure. If pressure is low renew combined flow control and relief valve. If pressure remains low, check system for internal leaks by dismantling steering unit
	Aerated fluid	Renew fluid or allow system to stand for at least one hour
Noisy system		
	Low fluid level	Fill reservoir to correct level with an approved fluid and bleed system by operating steering
	Loose drive belt(s)	Correctly adjust drive belt(s)
	Pressure hose not correctly fitted	Ensure correct run of hose
	Excessive back pressure due to partially blocked pipes or resistance to steering gear movement	Locate restriction and correct if necessary

Printed in England
© Rolls-Royce Motors Limited 1977
February 1977
T.S.D. 4200

Malfunction	Possible cause	Action
Noisy system (continued)		
	Scored rotor or rollers	Renew rotor and rollers or fit new pump if required
	Excessive wear on cam ring	Fit new steering pump
	Defective flow control valve	Renew valve
	Scored pressure plate	Lap to remove light scoring. Renew heavily scored components
	Vanes incorrectly fitted	Fit vanes correctly
	Vanes sticking in rotor slots	Free by removing burrs or dirt
	Extreme wear on pump ring	Renew pump ring, rotor and vanes
	Face of thrust plate scored	Lap to remove light scoring. Renew rotor, vanes and pump ring if rotor is heavily scored
	Scored rotor	Lap to remove light scoring. Renew heavily scored components
	Aerated fluid	Change fluid or allow system to stand for at least one hour
Steering		
Car pulls to one side or the other	Front end geometry misaligned	Check steering geometry
	Pump drive belt(s) slipping	Correctly adjust steering pump belt(s)
	Flow control valve sticking	Examine flow control valve. Renew valve if necessary
Heavy steering	Incorrect tyre pressures	Check and correct tyre pressures
	Loose pump drive belt(s)	Correctly adjust drive belt(s)
	Low fluid level in reservoir	Check level of fluid in reservoir. Top-up if required. Examine system for leaks
	Lack of lubricant in steering joints	Examine all steering joints. Grease with approved lubricant if required
	Insufficient fluid pressure	If the preceding checks do not reveal the cause of heavy steering, check pump pressure
	Faulty or obstructed flow control valve	Renew or replace if necessary

Malfunction	Possible cause	Action
Heavy steering (continued)	Incorrect front wheel alignment	Check and adjust if required
	Excessive castor or toe-in	Adjust castor or toe-in to within specified limits
	Incorrect camber angle	Correct camber angle to within specified limits
	Distorted flexible coupling or defective universal joint	Examine flexible coupling. Renew if necessary. Examine universal joint in lower steering column. Renew if necessary
	Triangle levers misaligned	Check wheel castor and camber
	Front sub-frame distorted	Check sub-frame for correct alignment. Correct or renew if required
	Kinks in hoses	Ensure correct run of hoses
	Obstruction in hose. Inner bore of hose swollen, caused by overheated or incorrect fluid	Renew hose
	Pressure loss in rack and pinion unit caused by worn P.T.F.E. seals, scored bore	Overhaul unit
	Leakage at pinion valve	Overhaul unit
Steering wheel		
Excessive play at steering wheel	Excessive play in steering linkage	Adjust steering linkage or renew parts if required.
	Insufficient pre-load	Strip and rebuild steering unit
	Defective bonded coupling	Replace
	Worn universal joints in lower linkage	Replace
	Front wheel bearings incorrectly adjusted or worn	Correctly adjust bearings or renew if required
	Worn check valve in pressure connection	Renew check valve

Printed in England
© Rolls-Royce Motors Limited 1977
August 1977
T.S.D. 4200

Malfunction	Possible cause	Action
Steering linkage		
	Steering linkage loose	Examine linkage pivot points for wear. Renew worn parts if required
Rack and pinion unit		
Oil leak from centre linkage	Loose convoluted seal clips	Tighten
	Defective centre seal	Fit new seal and bond
Hydraulic fluid leaks from hose connections and pipe unions	Loose hose connections or damaged 'O' rings	Tighten hose connections. If tightening fails to cure leak, examine ends of hoses for cracks or damage. Renew 'O' rings if necessary
	Damaged hose	Examine hose for fretting, fraying or deterioration. Renew hose if required. Ensure that correct hose run is obtained and that hose clips are correctly fitted.

Section N7

Workshop tools

Tool Number	Description
Steering wheel	
RH 7870	Extractor – Corniche and Camargue
Spool valve and pinion	
RH 9120	Spline cover – Input shaft. Upper oil seal
RH 9121	Applicator – Input shaft. Upper and lower oil seal
RH 9117	Applicator – P.T.F.E. rings. Spool valve
RH 9118	Sizing tool – P.T.F.E. rings. Spool valve
RH 9123	Torque arm – Spool valve ball race pre-load (use with spring balance)
Steering pump	
RH 7674	Pliers (two-way) – Circlip and snap ring
RH 9106	Fitting and extracting tool – Pulley
Rack unit	
RH 9112	Sizing tool (small) – P.T.F.E. scarf jointed bearing
RH 9113	Sizing tool (medium) – P.T.F.E. scarf jointed bearing
RH 9114	Sizing tool (large) – P.T.F.E. scarf jointed bearing
RH 9119	Screwed location plug – Rack centring
RH 9125	Spanner (open ended) – To fit torque wrench
RH 9122	Torque wrench extension – Steering rack anchorage

Printed in England

© Rolls-Royce Motors Limited 1978

December 1978

T.S.D. 4200

Chapter P

Torque tightening figures

Section

P1 Introduction
P2 Standard parts
P3 Special parts

Printed in England

© Rolls-Royce Motors Limited 1978

January 1978

T.S.D. 4200

Chapter P

Issue record sheet 1

March 1982

The dates quoted below refer to the issue date of individual pages within this chapter.

Section	P1	P2	P3
Page No.			
1	Jan 78	Jan 78	Mar 82
2			Mar 82
3			Jan 78
4			Jan 78
5			Jan 78
6			Jan 78
7			Jan 78
8			Jan 78
9			Jan 78
10			Jan 78
11			Dec 78
12			Dec 78
13			Apr 80
14			Apr 80
15			
16			
17			
18			
19			
20			
21			
22			
23			
24			
25			
26			
27			
28			
29			
30			
31			
32			
33			
34			
35			
36			
37			
38			
39			
40			
41			
42			
43			
44			
45			
46			
47			
48			

Printed in England

© Rolls-Royce Motors Limited 1982

T.S.D. 4200

Section P1

Introduction

Tighten all setscrews, full nuts and half nuts to the figures quoted in the **'Standard Parts'** tables **except** those components listed in the **'Special Parts'** tables. On these occasions, the special torque tightening figure is listed adjacent to the relevant component and description.

Setscrews should be tightened to the figures quoted for full or castellated nuts.

Plated parts should have all burrs and foreign matter (e.g. grit, grease and paint) removed from the abutment faces of the nuts, setscrews, washers, and components to ensure that the correct torque tightening figures are obtained.

The threads and abutment faces of **Non-Plated parts** should be smeared with engine oil before being fitted.

All unified nuts having an identification groove on one end, are to be fitted with the groove end away from the mating face.

Certain items should not be torque tightened and these are as follows.

Items not to be torque tightened

1. Nuts which are locked by riveting
2. Wood screws
3. Hub assembly retaining nuts (front and rear)
4. All threads less than 2 B.A. (except items listed in this Chapter)
5. Front door private lock nuts.

Printed in England
© Rolls-Royce Motors Limited 1978
January 1978
T.S.D. 4200

Section P2

Torque tightening figures for Standard Parts

Full nut

Size	kgf.m.	lbf.ft.
2 B.A.	0,5 - 0,7	48 - 60 lbf.in.
¼ in. dia. U.N.F. 7/16 in. A/F	1,1 - 1,4	8 - 10
5/16 in. dia. U.N.F. ½ in. A/F	2,2 - 2,5	16 - 18
⅜ in. dia. U.N.F. 9/16 in. A/F	4,0 - 4,4	29 - 32
7/16 in. dia. U.N.F. ⅝ in. and 11/16 in. A/F	5,8 - 6,2	42 - 45
½ in. dia. U.N.F. ¾ in. A/F	8,3 - 9,0	60 - 65
⅝ in. dia. U.N.F. ⅞ in. A/F	11,7 - 12,4	85 - 90

Half nut

Size	kgf.m.	lbf.ft.
2 B.A.	0,3 - 0,4	30 - 36 lbf.in.
¼ in. dia. U.N.F. 7/16 in. A/F	0,7 - 1,0	5 - 7
5/16 in. dia. U.N.F. ½ in. A/F	1,8 - 2,0	13 - 15
⅜ in. dia. U.N.F. 9/16 in. A/F	3,0 - 3,4	22 - 25
7/16 in. dia. U.N.F. ⅝ in. and 11/16 in. A/F	4,5 - 5,0	33 - 36
½ in. dia. U.N.F. ¾ in. A/F	6,6 - 7,2	48 - 52
⅝ in. dia. U.N.F. ⅞ in. A/F	10,0 - 10,8	73 - 78

Printed in England

© Rolls-Royce Motors Limited 1978

January 1978

T.S.D. 4200

Section P3

Torque tightening figures for Special Parts

Chapter E - Engine

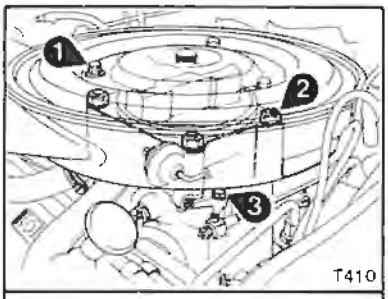

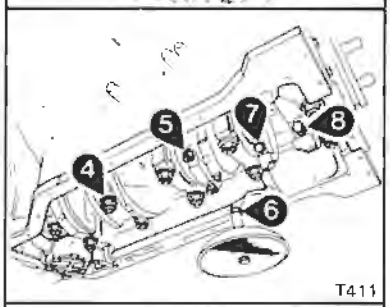

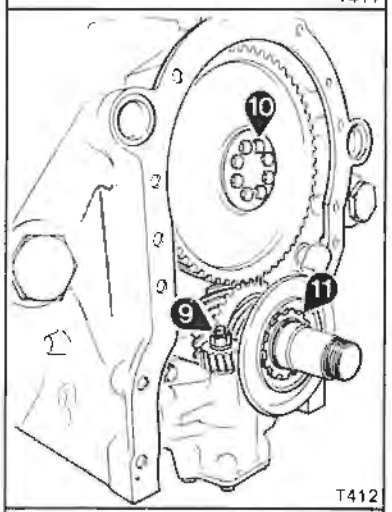

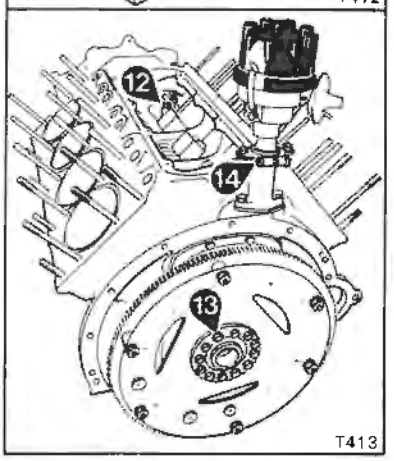

Ref	Component	Size	kgf.m.	lbf.ft.
1	Air cleaner/silencer lid (Solex) - cap nut	¼in. dia. U.N.F. 7/16in. A/F	0,7	5
2	Carburetter to inlet manifold (Solex) - nut	5/16in. dia. U.N.F. ½ in. A/F	1,4	10
3	Bell crank to inlet manifold (Solex) - setscrew	¼ in. dia. U.N.F. 7/16 in. A/F	0,8	6
4	Main bearing cap - nut	½in. dia. U.N.F. ¾in. A/F	6,2 - 6,9	45 - 50
		†½in. dia. U.N.F. ¾in. A/F	8,0 - 8,5	56 - 62
5	Big-end - nut	⅜ in. dia. U.N.F. 9/16 in. A/F	5,5 - 6,2	40 - 45
6	Oil pump intake strainer - castellated nut	¼in. dia. U.N.F. 7/16 in.A/F	0,3	[24 - 30 lbf.in.]
7	Crankshaft balance weight - setscrew	⅜ in. dia. U.N.F. 9/16 in. A/F	4,1 - 4,8	30 - 35
8	Crankshaft balance weight - setscrew	7/16 in. dia. U.N.F. 11/16 in. A/F	6,6 - 7,1	48 - 52
9	Oil pump drive gear - nut	⅜in. dia. U.N.F. 9/16 in. A/F	3,2 - 3,7	23 - 27
10	Camshaft gear - setscrew	¼in. dia. U.N.F. 7/16 in. A/F	1,1 - 1,4	8 - 10
11	Crankshaft pinion - slotted nut (L.H.)	1.75in. dia. U.N.S.	38,7 - 44,2	280 - 320
12	Tappet block - setscrew	¼in. dia U.N.F. 7/16 in. A/F	1,1 - 1,4	8 - 10
13	Drive plate to crankshaft - setscrew	⅜in. dia. U.N.F. 9/16 in. A/F	4,0 - 4,4	29 - 32
14	Distributor clamp plate - bolt	* ¼ in. dia. U.N.F. 7/16 in. A/F * ¼ in. dia. B.S.F. 5/16 in. Whit.	0,6	[48 - 52 lbf.in.]

† Late engines as defined in Chapter E
* Alternatives

Printed in England

© Rolls-Royce Motors Limited 1982

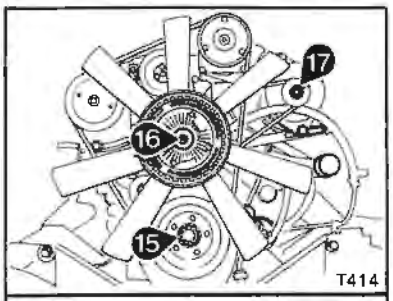

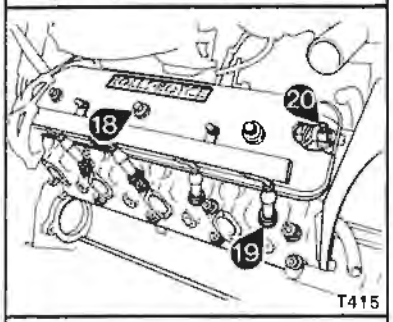

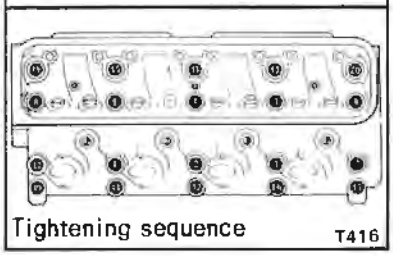

	Ref	Component	Size	kgf.m.	lbf.ft.
	15	Crankshaft damper drive flange - slotted nut	1 ¼in. dia. U.N. Slotted nut to be initially tightened to 13,1 kgf.m. (95 lbf.ft.), further tightening of the nut to align the castellations with the lock-washer is permissible. However, the final torque figure must not exceed 20,7 kgf.m. (150 lbf.ft.).	13,1 - 20,7	95 - 150
	16	Viscous drive - socket head cap screw (Allen screw)	⅜in. dia. U.N.F.	4,0 - 4,4	29 - 32
	17	Alternator pulley - lock nut	⅝in. dia. U.N.F. 1 5/16in. A/F	5,5 - 5,8	40 - 42
	18	Rocker cover - cap nut	¼in. dia. U.N.F. 7/16 in. A/F	0,1	[10 - 12 lbf.in.]
	19	Sparking plug	M14 13/16 in. A/F	1,8 - 2,3	13 - 17
	20	Rocker shaft pedestal	¼ in. dia. U.N.F. 7/16 in. A/F	1,1 - 1,4	8 - 10
		Cylinder head - nut	7/16 in. dia. U.N.F. 1 1/16in. A/F		
		Stage 1 Initial tightening		2,8 - 3,5	20 - 25
		Stage 2 Final tightening		6,9 - 7,6	50 - 55
Manifold		Exhaust manifold	5/16 in. dia. U.N.F. ½ in. A/F	3,2 - 3,4	23 - 25
Oil level indicator		Oil level indicator - cheesehead screw	3 B.A.	0,2	[20 - 22 lbf.in.]

Chapter G - Hydraulic systems

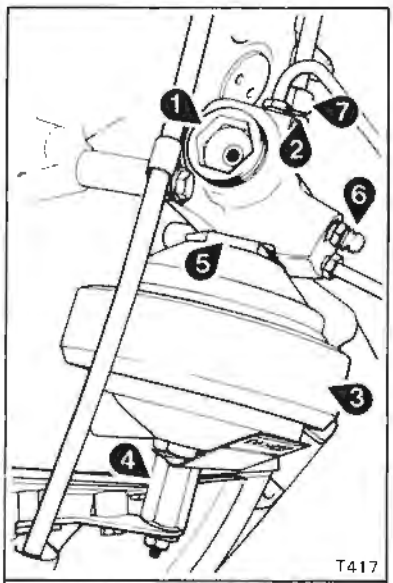

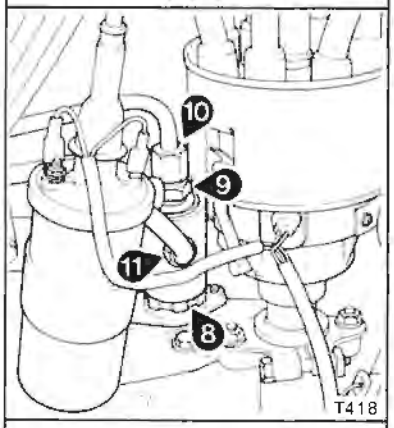

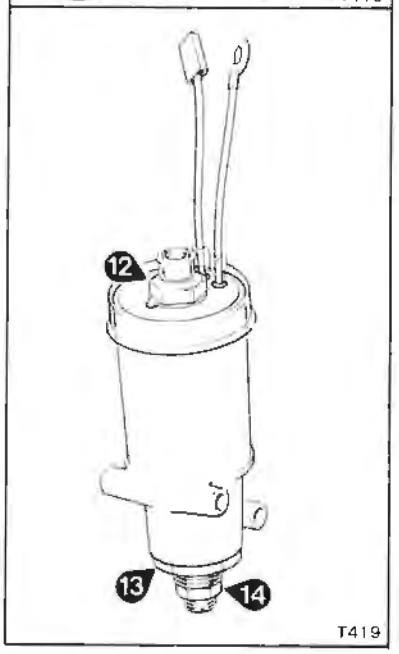

Ref.	Component	Size	kgf.m.	lbf.ft.
1	Bobbin retainer - plug	1 ½ in. dia. U.N.S.	7,6 - 8,3	55 - 60
2	Inlet hose - adapter	⅝ in. dia. U.N.F. 9/16 in. A/F	1,7 - 2,1	12 - 15
3	Clamp - ring	4 13/16 in. dia. Buttress	36,6 - 38,0	265 - 275
4	Charging valve - sealing cap	⅝ in. dia. U.N.F. ¾ in. A/F	3,0 - 3,5	22 - 25
5	Sphere to valve body - sub-assembly	1 ⅛ in. dia. U.N.F. 1 11/16 in. A/F	7,6 - 8,3	55 - 60
6	Bleed screw	⅜ in. dia. U.N.F. 7/16 in. A/F	1,1 - 1,4	8 - 10
7	Brake pump to accumulator (accumulator end) - pipe nut	⅜ in. dia. U.N.F. ¾ in. A/F	2,8 - 3,4	20 - 25
8	Brake pump to engine - castellated nut	1 ⅛ in. dia. U.N.F.	4,4 - 4,8	32 - 35
9	High pressure outlet - adapter	⅞ in. dia. U.N. 15/16 in. A/F	6,9 - 7,6	50 - 55
10	Brake pump to accumulator (brake pump end) - pipe nut	⅜ in. dia. U.N.F. ¾ in. A/F	1,1 - 1,4	8 - 10
11	Brake pump inlet pipe - pipe nut	9/16 in. dia. B.S. Whit 0.601 in. A/F = 5/16 in. B.S. Whit	1,7 - 2,1	12 - 15
12	Cone valve body - retaining nut	9/16 in. U.N.F. 13/16 in. A/F	2,5 - 2,8	18 - 20
13	Valve seat adjuster - lock nut	⅞ in. U.N.F. 1 ⅛ in. A/F	5,2 - 5,5	38 - 40
14	Valve seat - lock nut	9/16 in. U.N.F. 11/16 in. A/F	1,8 - 2,1	13 - 15

Printed in England

© Rolls-Royce Motors Limited 1978

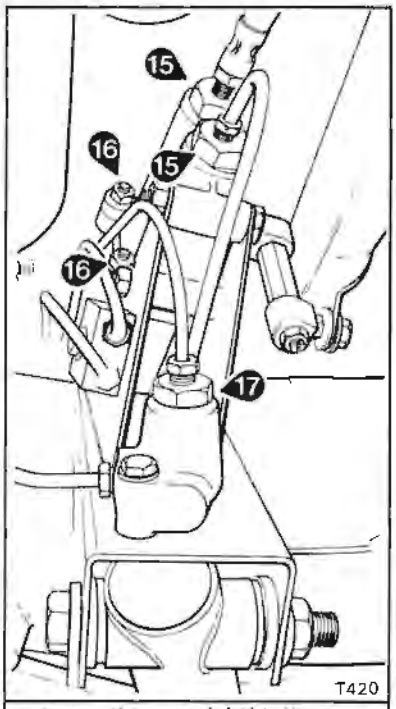

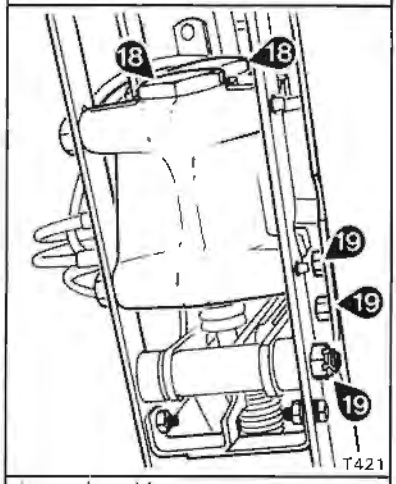

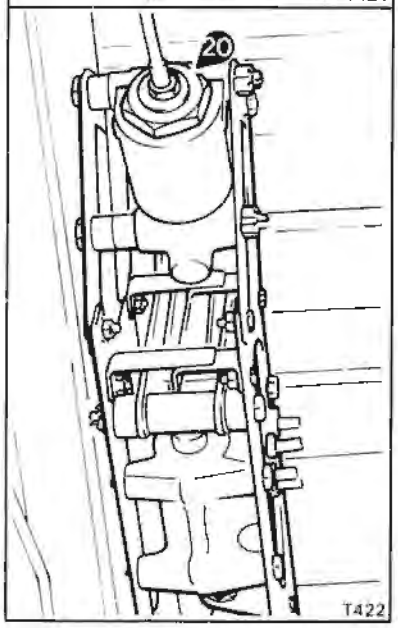

Ref.	Component	Size	kgf.m.	lbf.ft.
15	Height control valve housing - adapter	¾ in. dia. U.N.F. 7/8 in. A/F	4,0 - 4,4	29 - 32
16	Height control valve casing adapter - nut	¼ in. dia. U.N.F. 7/16 in. A/F	4,0 - 4,4	29 - 32
17	Rear restrictor - adapter	5/8 in. dia. U.N.F. ¾ in. A/F	3,0 - 3,5	22 - 25
18	Distribution valve - end plug	7/8 in. dia. U.N. 1 1/8 in. A/F	8,3 - 9,0	60 - 65
19	Distribution valve mounting - castellated nut	¼ in. dia. U.N.F. 7/16 in. A/F	1,1 - 1,4	8 - 10
20	'G' conscious limiting valve - end plug	1¼ in. dia. U.N.E.F. 1⅜ in. A/F	3,5 - 4,8	25 - 35

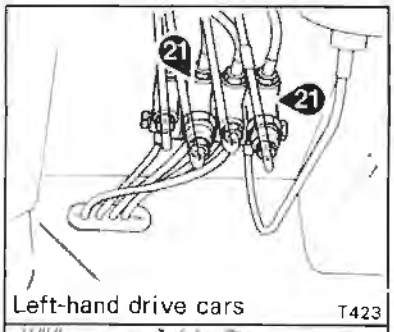

Left-hand drive cars T423

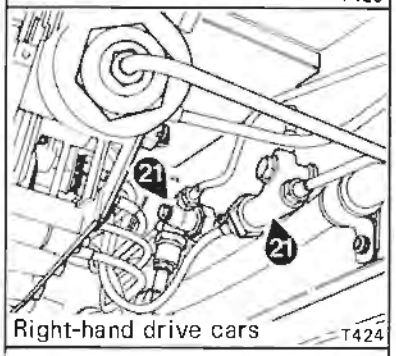

Right-hand drive cars T424

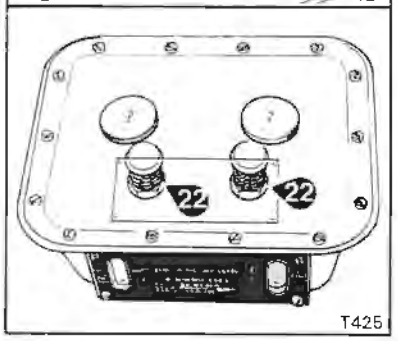

T425

Ref.	Component	Size	kgf.m.	lbf.ft.
21	Brake line - restrictors	⅜ in. dia. U.N.F. ¼ in. A/F	1,7 - 2,1	12 - 15
22	Brake fluid filter - nut	½ in. dia. U.N.F. ¾ in. A/F	2,8 - 3,4	20 - 25

Hydraulic system	Pressure switch	⅜ in. dia. U.N.F. 1in. A/F	1,7 - 2,1	12 - 15
Flexible hose	Accumulator to body - male pipe nut	⅜ in. dia. U.N.F. 7/16 in. A/F	0,7 - 1,0	5 - 7
Flexible hose	Accumulator to sub-frame - nut	⅜ in. dia. U.N.F. 9/16 in. A/F	1,7 - 2,1	12 - 15
Support bracket	Flexible hose to support bracket - lock-nut	⅜ in. dia. U.N.F. 9/16 in. A/F	1,4 - 1,7	10 - 12
Bundy tubing	4,7 mm. (3/16 in.) dia. - male pipe nut	⅜ in. dia. U.N.F. 7/16 in. A/F	0,7 - 1,0	5 - 7
Bundy tubing	4,7 mm. (3/16in.) dia. - female pipe nut	⅜ in. dia. U.N.F. 9/16 in. A/F	1,1 - 1,4	8 - 10
Bundy tubing	6,3 mm. (¼in.) dia. - male pipe nut	7/16 in. dia. U.N.F. ½ in. A/F	1,1 - 1,4	8 - 10

Printed in England
© Rolls-Royce Motors Limited 1978
January 1978
T.S.D. 4200

Chapter H - Subframes and suspension

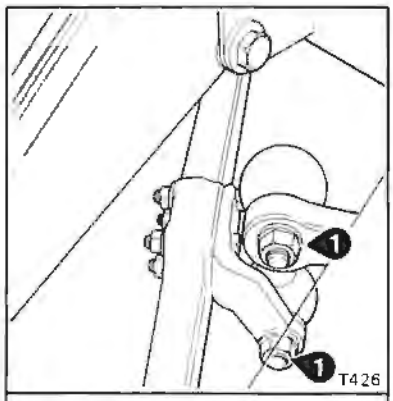

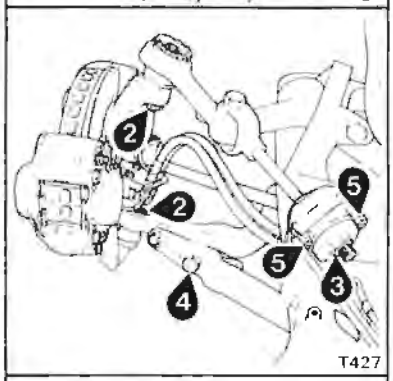

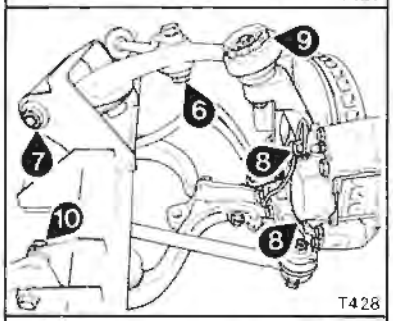

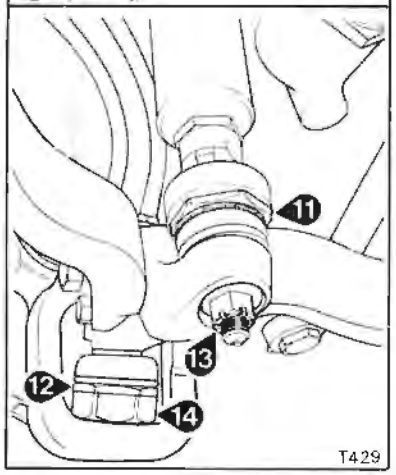

Ref.	Component	Size	kgf.m.	lbf.ft.
1	Anti-roll rod link - nut	7/16 in. dia. U.N.F. 11/16 in. A/F	5,8 - 6,3	42 - 45
2	Bearing pins - castellated nut	7/8 in. dia. U.N.F. 15/16 in. A/F	20,3 - 21,1	147 - 153
3	Compliance damping mount - nut	5/8 in. dia. U.N.F. 15/16 in. A/F	10,1 - 10,8	73 - 78
4	Lower triangle lever - bolt	5/8 in. dia. U.N.F. 15/16 in. A/F	11,7 - 12,4	85 - 90
5	Compliance rod mount - nut	3/8 in. dia. U.N.F. 9/16 in. A/F	4,0 - 4,4	29 - 32
6	Compliance (upper) lever jaw bolt - nut	5/8 in. dia. U.N.F. 15/16 in. A/F	10,1 - 10,8	73 - 78
7	Eccentric adjuster upper lever - nut	5/8 in. dia. U.N.F. 15/16 in. A/F	10,1 - 10,8	73 - 78
8	Front brake caliper to stub axle - setscrew	7/16 in. dia. U.N.F. 5/8 in. A/F	5,8 - 6,2	42 - 45
9	Upper lever - slotted nut	1 13/16 in. dia. U.N.F.	20,7 - 24,2	150 - 175
10	Front engine mounting to crossmember - nut	1/2 in. dia. U.N.F. 3/4 in. A/F	11,7 - 12,4	85 - 90
11	Front damper ball joint assembly Torque to rotate ball pin prior to fitting shims	1 1/2 in. dia. U.N. 1 3/4 in. A/F	0,3 - 0,7	[30 - 60 lbf.in.]
	Final assembly torque tightening		16,6 - 18,0	120 - 130
12	Lower triangle lever ball joint assembly Torque to rotate ball pin prior to fitting shims	1 3/4 in. dia. U.N. 2 in. A/F	0,4 - 0,8	[35 - 75 lbf.in.]
	Final assembly torque tightening		34,6 - 41,5	250 - 300
13	Lower triangle lever bearing pin - castellated nut	5/8 in. dia. U.N.F. 15/16 in. A/F	5,8 - 6,2	42 - 45
14	Lower triangle lever bearing pin housing - housing	1in. dia. U.N.F. 2in. A/F	8,3 - 9,0	60 - 65

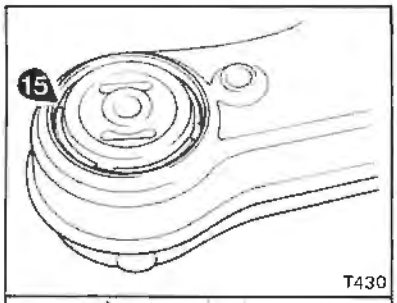

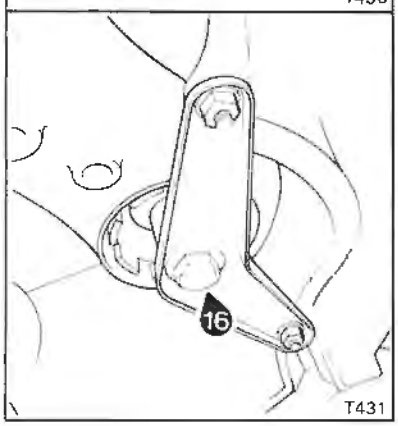

Ref.	Component	Size	kgf.m.	lbf.ft.
15	Resilient mountings retaining ring - slotted nut		17,2 - 20,7	125 - 150
16	Sub-frame mountings - setscrew	½ in. dia. U.N.F. ¾ in. dia. A/F	8,3 - 9,0	60 - 65

Printed in England
© Rolls-Royce Motors Limited 1978

Chapter J - Final drive

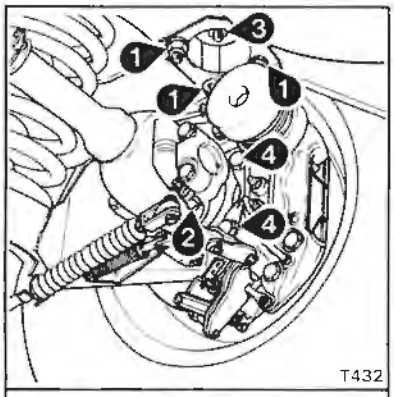

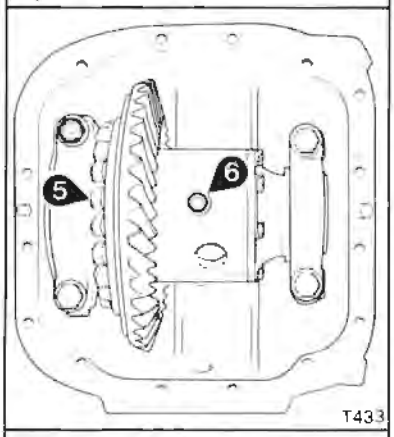

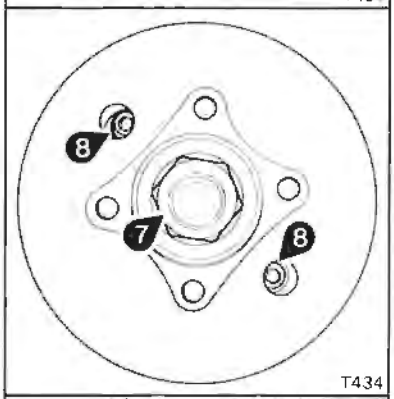

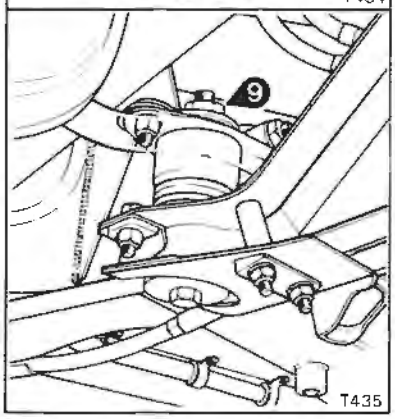

Ref.	Component	Size	kgf.m.	lbf.ft.
1	Crossmember mounting plate - nut	⅜ in. dia. U.N.F. 9/16 in. A/F	4,7 - 5,1	34 - 37
2	End yoke to driving shaft - nut	1⅛ in. dia. U.N. 1 11/16 in. A/F	67,7 - 70,5	490 - 510
3	Rear axle crossmember mounting - nut	7/16 in. dia. U.N.F. 11/16 in. A/F	4,7 - 5,1	34 - 37
4	Rear brake caliper to stub axle - setscrew	½ in. dia. U.N.F. ¾ in. A/F	11,0 - 11,7	80 - 85
5	Crownwheel to differential housing - nut	⅜ in. dia. U.N.F. 9/16 in. A/F	5,8 - 6,2	42 - 45
6	Differential trunnion bolt - lock-nut	¼ in. dia. U.N.F. 5/16 in. A/F	1,6 - 1,9	12 - 14
7	Input flange to input pinion - nut	1⅛ in. dia. U.N.S. 1 11/16 in. A/F	38,0 - 41,5	275 - 300
8	Pinion housing to differential casing - allenscrew	⅜ in. dia. U.N.F.	4,0 - 4,4	29 - 32
9	Torque arm front mount - nut	7/16 in. dia. U.N.F. 11/16 in. A/F	4,7 - 5,1	34 - 37

Chapter N - Steering system

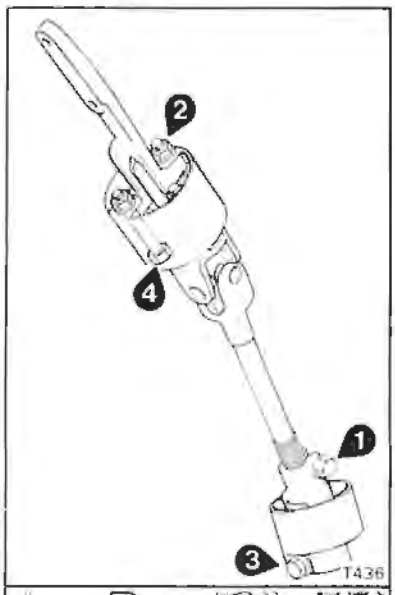

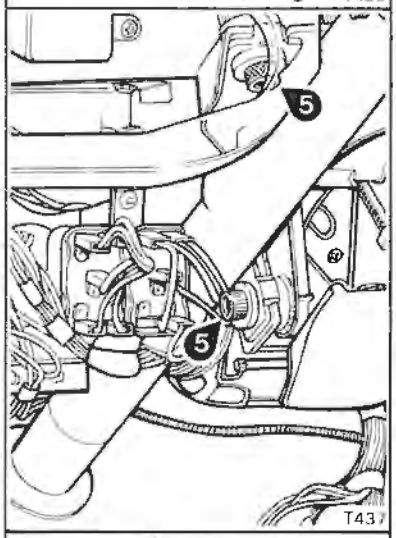

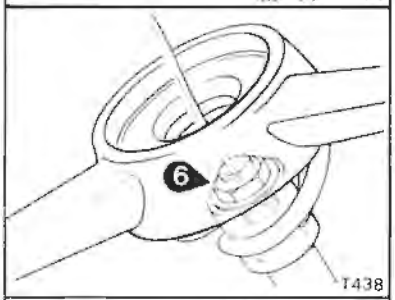

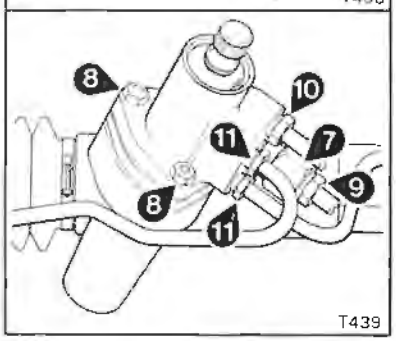

Ref.	Component	Size	kgf.m.	lbf.ft.
1	Coupling shaft adjusting spline clamp - castellated nut	5/16 in. dia. U.N.F. 1/2 in. A/F	2,2 - 2,5	16 - 18
2	Heatshield to rubber coupling - nut	5/16 in. dia. U.N.F. 1/2 in. A/F	1,8 - 2,1	13 - 15
3	Rack to lower coupling - castellated nut	5/16 in. dia. U.N.F. 1/2 in. A/F	2,2 - 2,5	16 - 18
4	Steering column rubber coupling - setscrew/nut	5/16 in. dia. U.N.F. 1/2 in. A/F	2,2 - 2,5	16 - 18
5	Steering column mounting - Allen screw	3/8 in. dia. U.N.F.	2,9 - 3,3	21 - 24
6	Steering wheel - nut	9/16 in. dia. U.N. 7/8 in. A/F	3,4 - 3,8	25 - 28
7	Anti-joggle valve assembly - housing	M14 1 in. A/F	2,8 - 4,1	20 - 30
8	Pinion and spool valve housing - nut	M8 1/2 in. A/F	2,0 - 2,5	14.75 - 18.5
9	Pump to pinion and spool valve housing - male pipe nut	11/16 in. dia. U.N.S. 11/16 in. A/F	2,8 - 4,1	20 - 30
10	Pinion and spool valve housing - male pipe nut	M16 11/16 in. A/F	2,8 - 4,1	20 - 30
11	Steering rack to pinion and spool valve assembly pipes - male pipe nut	M14 0.591 in. A/F	1,9 - 2,2	14 - 16.2

Printed in England
© Rolls-Royce Motors Limited 1978

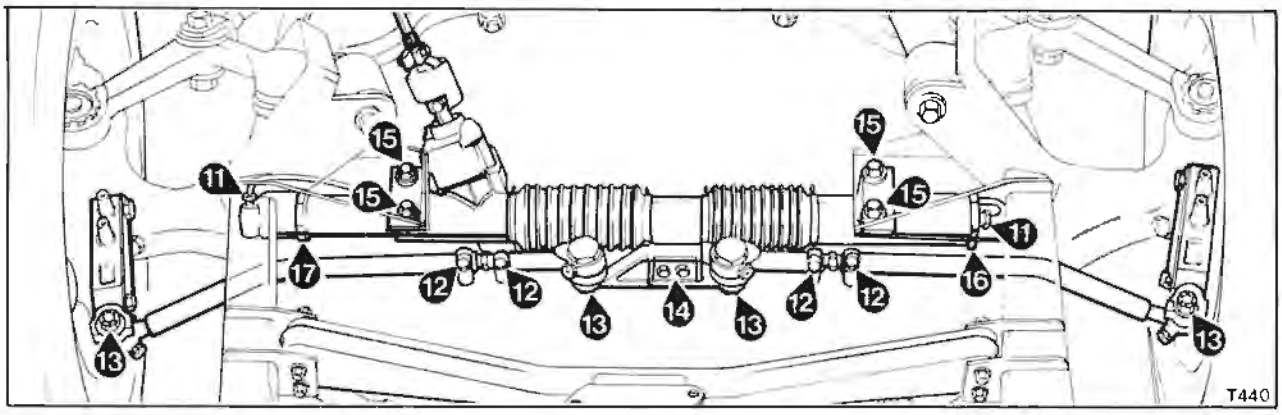

Ref.	Component	Size	kgf.m.	lbf.ft.
12	Track rod clamping - castellated nut	5/16 in. dia. U.N.F. 1/2 in. A/F	2,2 - 2,5	16 - 18
13	Track rod ball pin - castellated nut	7/16 in. dia. U.N.F. 11/16 in. A/F	4,8 - 5,5	35 - 40
14	Inner ball joint bracket - setscrew	M9 11/16 in. A/F	3,8 - 4,0	27.5 - 30
15	Steering rack mounting - setscrew	7/16 in. dia. U.N.F. 3/8 in. A/F	5,8 - 6,2	42 - 45
16	Steering rack - end plug	M40 2.15 in. A/F	4,8 - 5,5	35 - 40
17	Steering rack - lock-nut	M43 1.95 in. A/F	2,0 - 2,5	14.75 - 18.5

Chapter R - Wheels and tyres

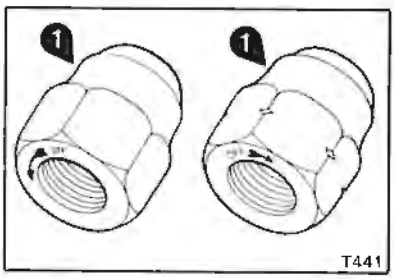

Ref.	Component	Size	kgf.m.	lbf.ft.
1	Road wheel - nut	1/2 in. dia. U.N.F. 0.82 in. A/F	6,2 - 6,9	45 - 50

Chapter S Body

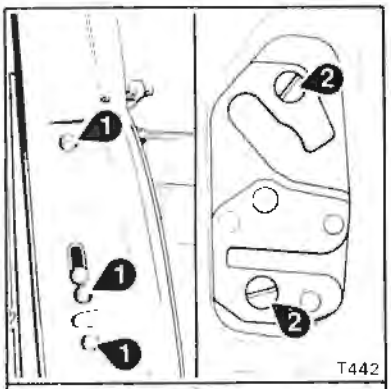

Not Camargue

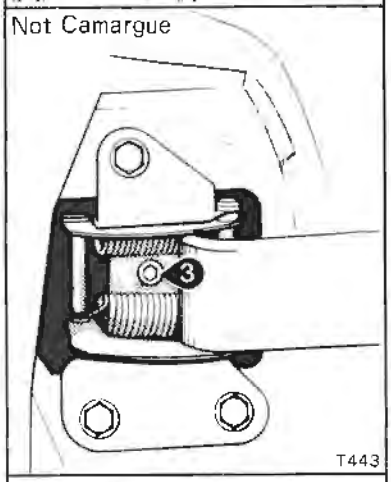

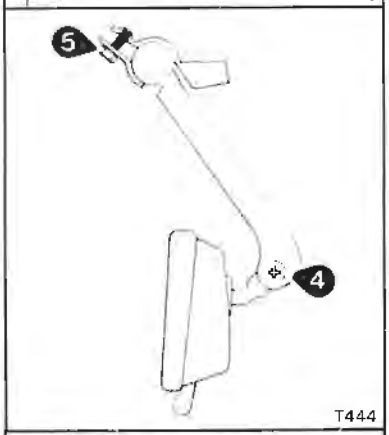

Camargue

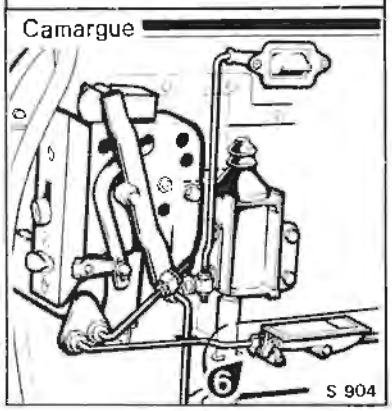

Ref.	Component	Size	kgf.m.	lbf.ft.
1	Door lock C/S screw	¼ in. dia. U.N.F.	1,1 - 1,4	8 - 10
2	Door striker plate - C/S screw	⅜ in. dia. U.N.F.	2,2 - 2,5	16 - 18
3	Front door top hinge - Allen screw	⅜ in. dia. U.N.F.	2,2 - 2,5	16 - 18
4	Rear view interior mirror - Friction joint - C/S Pozidriv screw	2 B.A.	0,2	16 - 19 lbf.in.
5	Rear view interior mirror - Stem head - setscrew	2 B.A.	0,25	20 - 25 lbf.in.
6	Door link rod clamp bolt - lock nut	2 B.A.	0,05 - 0,06	4 - 5 lbf.in.

Seat belts

Seat belt anchorage - setscrew	⅞ in. dia. U.N.F. 1⅜ in. A/F	2,9 - 3,2	21 - 23

Printed in England

© Rolls-Royce Motors Limited 1978

December 1978

T.S.D. 4200

Chapter T - Torque converter transmission

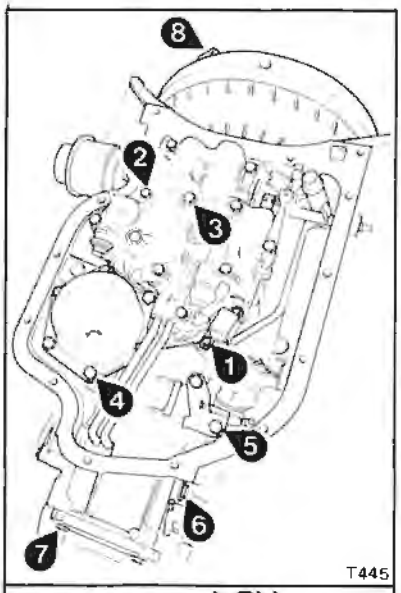

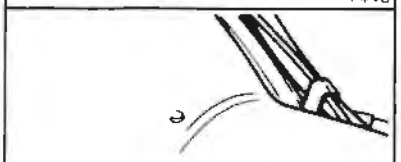

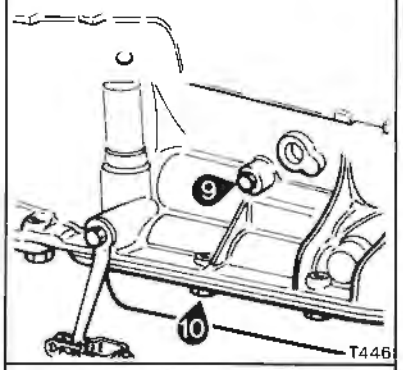

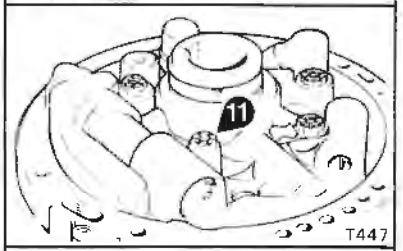

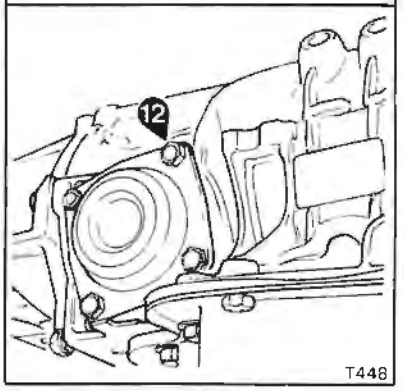

Ref.	Component	Size	kgf.m.	lbf.ft.
1	Solenoid to case - setscrew	¼ in. dia. U.N.C. 7/16 in. A/F	1,4	10
2	Control valve unit to case - setscrew	¼ in. dia. U.N.C. 7/16 in. A/F	1,1	8
3	Control valve unit to case - setscrew	5/16 in. dia. U.N.C. ½ in. A/F	1,1	8
4	Rear servo cover to case - setscrew	5/16 in. dia. U.N.C. ½ in. A/F	2,5	18
5	Parking pawl cover to case - setscrew	5/16 in. dia. U.N.C. ½ in. A/F	2,5	18
6	Speedometer drive to case retainer - setscrew	5/16 in. dia. U.N.C. 1 in. A/F † M6 10mm. A/F	2,5 2,5	18 18
7	Rear extension to case - setscrew	⅜ in. dia. U.N.C. 9/16 in. A/F	3,2	23
8	Engine flex plate to torque converter - setscrew	⅜ in. dia. U.N.C. 9/16 in. A/F † M10 9/16 in. A/F	4,1 4,1	30 30
9	Line pressure plug 3,2 mm. (⅛ in.) dia.	⅛ in. dia. N.P.T.F. 7/16 in. A/F	1,4	10
10	Sump to case - setscrew	5/16 in. dia. U.N.C. ½ in. A/F	1,7	12
11	Pump body to cover - setscrew	5/16 in. dia. U.N.C. ½ in. A/F	2,5	18
12	Governor cover to case - setscrew	5/16 in. dia. U.N.C. ½ in. A/F	2,5	18

† Fitted to 1979 and onwards Torque converter transmissions. These parts have metric threads and are not interchangeable with the equivalent parts fitted to pre-1979 transmissions. To determine the model year of a transmission, refer to the first two numbers of the 'Transmission serial number' (e.g. 78=1978, 79=1979).

	Ref.	Component	Size	kgf.m.	lbf.ft.
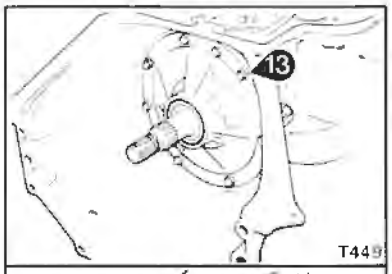	13	Pump to case - setscrew	5/16 in. dia. U.N.C. ½ in. A/F	2,5	18
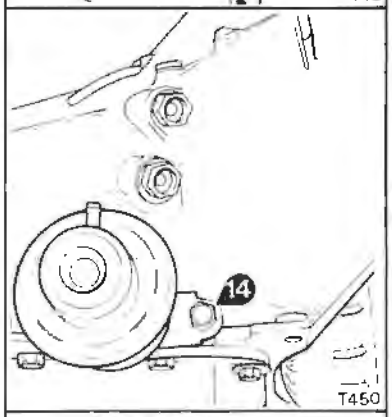	14	Vacuum modulator retainer to case - setscrew	5/16 in. dia. U.N.C. ½ in. A/F	2,5	18
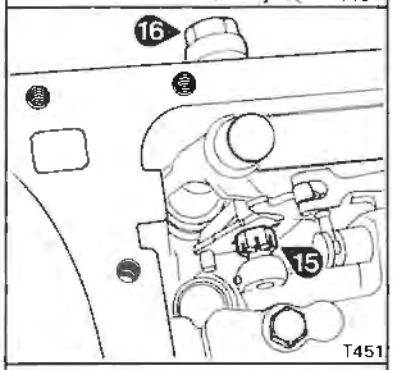	15	Manual shaft to detent lever - nut	⅜ in. dia. U.N.F. 9/16 in. A/F	2,5	18
	16	Gear change lever to manual shaft - nut	⅜ in. dia. U.N.C. 9/16 in. A/F	2,5	18
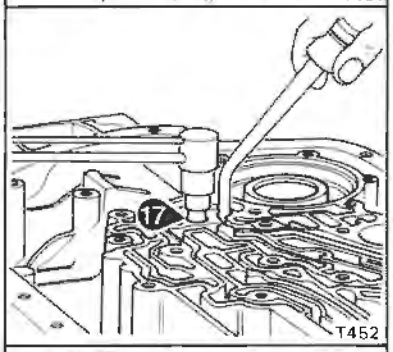	17	Case to centre support - setscrew	⅜ in. dia. U.N.C. ⅜ in. Thin wall socket	3,2	23
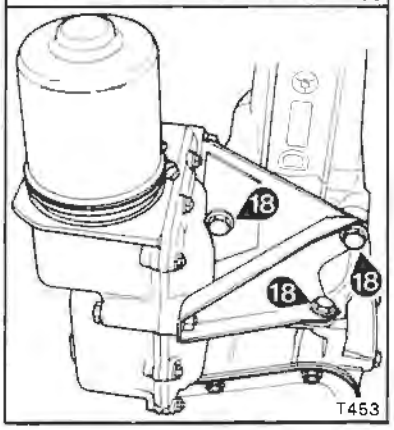	18	Actuator mounting bracket to rear extension - setscrew	7/16 in. dia. U.N.C. ⅝ in. A/F	5,3	38

Printed in England
© Rolls-Royce Motors Limited 1980
April 1980
T.S.D. 4200

Chapter U - Emission control systems (cars produced to the 1980 Model year specification for California)

	Ref.	Component	Size	kgf.m.	lbf.ft
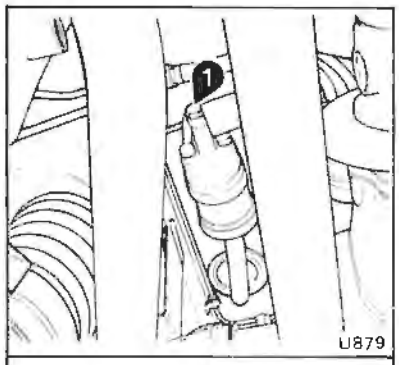 U879	1	Fuel pump - banjo bolt	M12 17mm. A/F When tightening the banjo bolt ensure that the pump outlet is held firmly with a spanner, otherwise the flexible pump mounts may be strained	1,7 - 2,5	12 - 18
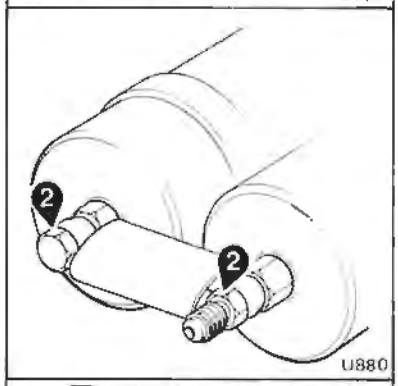 U880	2	Fuel filters - banjo bolt and banjo bolt/adapter	M12 17mm. A/F	1,0 - 1,5	7 - 11
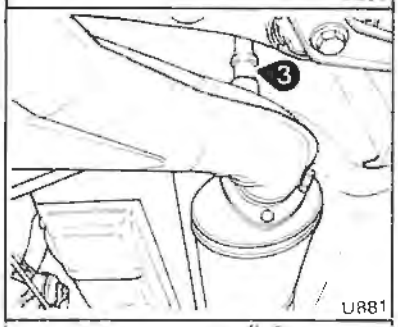 U881	3	Oxygen sensor	M18 22mm. A/F When fitting an oxygen sensor, always smear the threads with Neverseez assembly compound. Do not allow the assembly compound onto the slotted shield below the threaded portion.	5,1 - 6,1	37 - 44
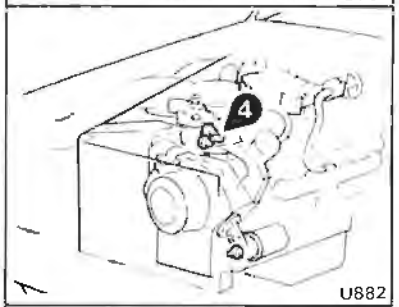 U882	4	Thermal time switch	M14 24mm. A/F	3,0	22
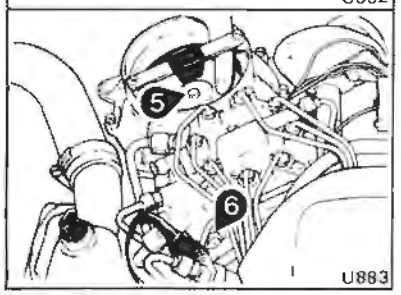 U883	5	Air flow sensor plate - setscrew	M6 10mm. A/F	0,50 - 0,55	[44 - 48 lbf.in.]
	6	Primary system pressure regulator (large hexagon)	M12 16mm. A/F	1,3 - 1,5	9,5 - 11

Chapter Q

Exhaust system

Section

Exhaust gas poisoning and First aid

Q1 Exhaust manifolds

Q2 Exhaust pipes and silencers (Cars other than those built to the Japanese and North American specifications prior to car serial number 50001)

Q3 Exhaust pipes, silencers and grass-fire shields (Cars built to the Japanese and North American specifications prior to car serial number 50001)

Q4 Exhaust pipes, silencers and grass-fire shields (Corniche and Camargue cars from car serial number 50001)

Q5 Exhaust pipes, silencers and grass-fire shields Cars built to the Californian 1980 Model year specification (Fuel injection system)

Printed in England

© Rolls-Royce Motors Limited 1980

April 1980

TSD 4204

Chapter Q

Exhaust gas poisoning and First aid

Danger -- Exhaust gas
Inhaling exhaust gas is dangerous.

If it is necessary to run the engine inside a building, always ensure that the exhaust gas is suitably piped to the outside.

First aid -- Burns
Before commencing work on the exhaust always ensure that the system is not hot.

In the event of a skin burn, cold clean water should be run over the affected area and if necessary, a dry dressing temporarily applied.

A medical centre or doctor should be consulted as soon as possible after administering this emergency treatment.

Printed in England
© Rolls-Royce Motors Limited 1979
March 1979
TSD 4200

Chapter Q

Issue record sheet 1

April 1980

The dates quoted below refer to the issue date of individual pages within this chapter.

Section	Q1	Q2	Q3	Q4	Q5
Page No.					
1	Mar 79	Mar 79	Mar 79	Mar 79	Apr 80
2		Mar 79	Mar 79	Mar 79	Apr 80
3		Mar 79	Mar 79	Mar 79	Apr 80
4		Mar 79	Mar 79		Apr 80
5					
6					
7					
8					
9					
10					
11					
12					
13					
14					
15					
16					
17					
18					
19					
20					
21					
22					
23					
24					
25					
26					
27					
28					
29					
30					
31					
32					
33					
34					
35					
36					
37					
38					
39					
40					
41					
42					
43					
44					
45					
46					
47					
48					

Printed in England

© Rolls-Royce Motors Limited 1980

T.S.D. 4200

Section Q1

Exhaust manifold

Exhaust manifolds – To remove

1. Support each downtake pipe just forward of the front silencers with wooden blocks and jacks.
2. Remove the clamps from around the downtake to manifold joint on 'A' and 'B' bank. Free both joints.
3. Detach the two choke stove pipes from the unions located on 'B' bank manifold. Blank off the pipes to prevent ingress of dirt (see Fig. Q1).
4. Remove the setscrews and distance pieces securing the manifolds to the cylinder heads, withdraw the manifolds.

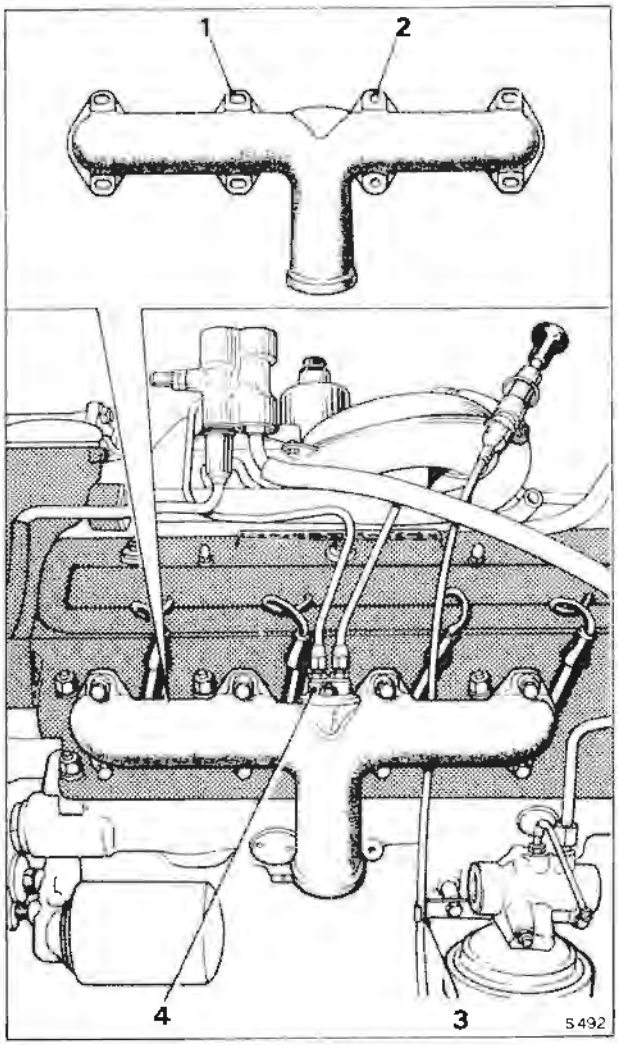

Fig. Q1 'B' bank exhaust manifold
1 Elongated expansion hole
2 Location hole
3 Dipstick tube
4 Choke stove assembly

5. Discard the gaskets fitted between the manifolds and the cylinder heads.
6. Blank off the ports in the cylinder heads to prevent the ingress of dirt and other foreign matter.

Exhaust manifolds – To inspect

1. Using medium grade emery cloth, lightly dress the manifold to downtake pipe joint.
2. Remove any scale on the manifold (to cylinder head) joint faces.
3. Check for distortion of the manifold (to cylinder head) joint faces using a straight edge.
4. Minor distortions can be corrected by rubbing the manifold joint faces across the cutting surface of medium grade emery cloth which is secured on its smooth side to a surface table.

Note

It is important that the manifold (to cylinder head) joint faces are flat, clean and square.

Exhaust manifolds – To fit

To fit the manifolds reverse the procedure given for their removal, noting the following points.

1. Ensure that all joint faces are free from scale and emery dust before assembly.
2. Lubricate all joint threads with oil to ensure that the threads do not bind.
3. Smear the spherical seating faces and the grooves in the spherical clamps with a graphite lubricant to assist in correct alignment.
4. All nuts and bolts should be tightened to the correct torque figure (see Chapter P). Manifold setscrews must be tightened evenly, starting at the centre and working outwards.
5. After the engine has been run sufficiently to reach normal operating temperature, the manifold setscrews and spherical joint clamp bolts should be checked and if necessary, again tightened to the correct torque figure (see Chapter P).

Printed in England
© Rolls-Royce Motors Limited 1979

Section Q2

Exhaust pipes and silencers

Cars other than those built to the Japanese and North American specifications prior to car serial number 50001

Introduction

The pipes and silencers form a six box twin exhaust system with a mid-point balance pipe just forward of the intermediate silencers (not fitted on late cars).

On late cars, a balance pipe is fitted forward of the front silencers. On cars manufactured to the Australian

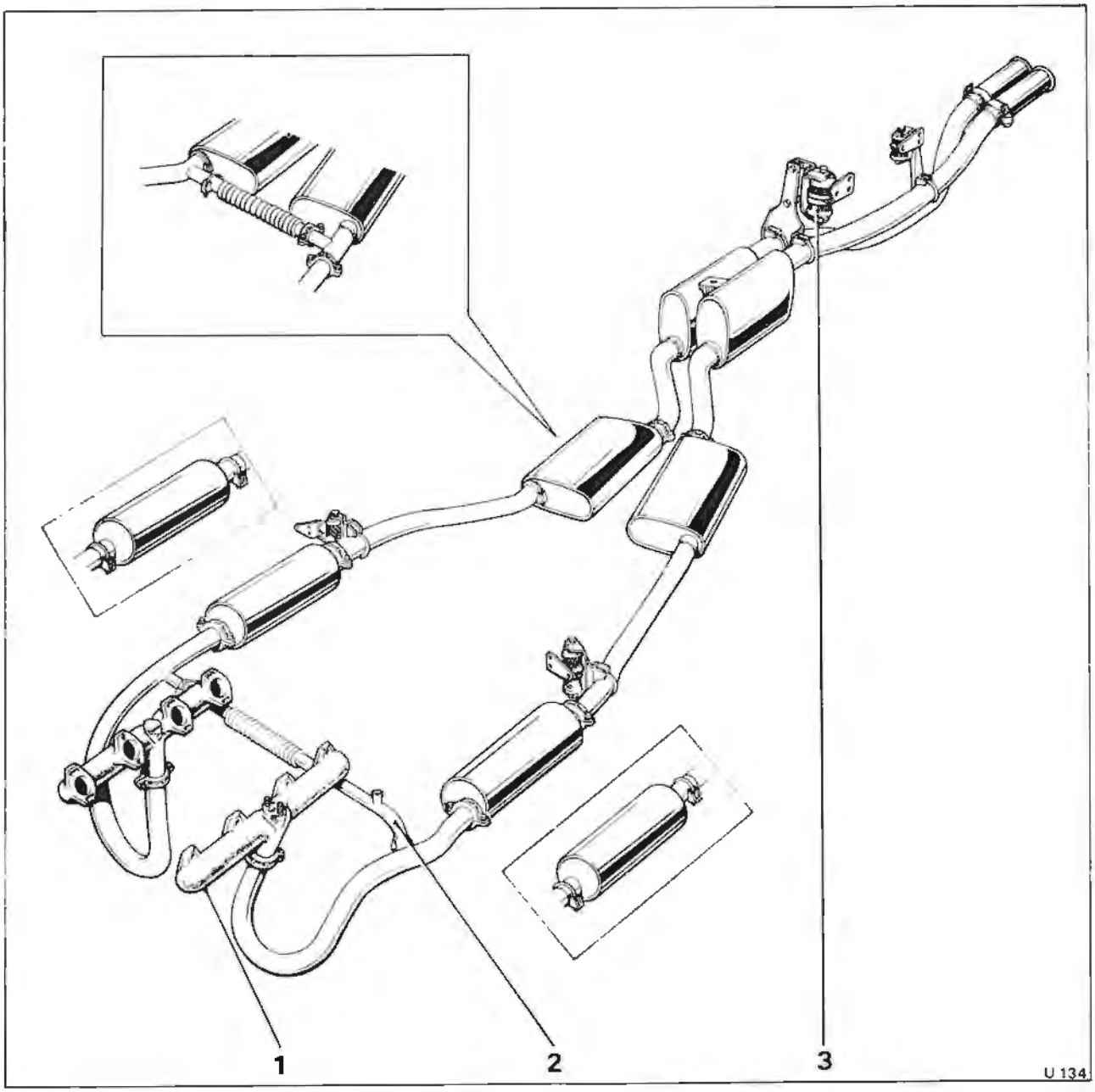

Fig. Q2 Exhaust system
(other than Canada, Japan and U.S.A.)

1 Exhaust manifold
2 Front balance/EGR balance pipe (fitted on late cars)
3 Vibrashock mount
Inset Items fitted on early cars

Printed in England
© Rolls-Royce Motors Limited 1979

specifications, this balance pipe is always fitted as the E.G.R. (exhaust gas recirculation) feed pipe is connected to it.

Exhaust pipes and silencers — To remove (see Fig. Q2)

1. Drive the car onto a ramp and raise the ramp.
2. Detach the rear silencers and pipework at the spherical joints situated behind the intermediate silencers. Remove the sealing rings.
3. Support the weight of the rear silencers assembly.
4. The rear silencers and pipes are mounted at two points which should be dismantled as follows,

(a) **at the mount situated just forward of the drive-shaft.** Unscrew the two ½ in. A/F nuts securing the exhaust pipes bracket to the metal mount bracket, collect the washers and distance pieces.

(b) **at the mount situated adjacent to the spare wheel carrier.** Unscrew the two ½ in. A/F nuts from the 'U' clamp situated around the upper exhaust pipe. Collect the washers and remove the 'U' clamp.

5. Withdraw the rear section of the exhaust system.
6. Remove the 'U' clamp and spherical joint to detach the intermediate balance pipe (not fitted on late cars).
7. Release the 'U' clamp situated in front of the 'A' bank intermediate silencer. Twist at the joint to break the seal and withdraw the silencer assembly.
8. Detach the pipe to the rear of 'A' bank front silencer at the 'U' clamp (or spherical joint on late cars) and at the resilient metal mount situated behind the body crossbeam.
9. Support the weight of 'A' bank front silencer. Unfasten the 'U' clamp (or spherical joint on late cars) attaching the silencer to the downtake pipe. Twist at the joint to break the seal and withdraw the silencer assembly.
10. Detach 'B' bank intermediate silencer at the spherical joint situated just forward of the silencer body (this joint is deleted on late cars). Withdraw the silencer and collect the sealing ring.
11. Unfasten the 'U' clamp at the rear of the front silencer (or spherical joint on late cars) and the resilient metal mount attached to the pipework. Withdraw the pipe (on late cars withdraw the intermediate silencer and pipe).
12. Support the weight of the front silencer. Release the 'U' clamp situated in front of the silencer assembly (or spherical joint on late cars), free the joint and withdraw the silencer.
13. On cars built to the Australian specification remove the vertical EGR pipe, refer to Chapter U — Emission Control Systems.

Release the 'U' clamp and detach the spherical joint attaching the balance pipe across the 'A' and 'B' bank downtake pipes. The balance pipe can now be twisted at the sliding joint. Collect the sealing ring from the flared end before withdrawing the balance pipe.

14. Remove the downtake pipes, refer to Section Q1, Exhaust manifolds to remove, Operations 1 and 2.

Note

Check all threads for damage and discard any 'U' clamps which are splayed.

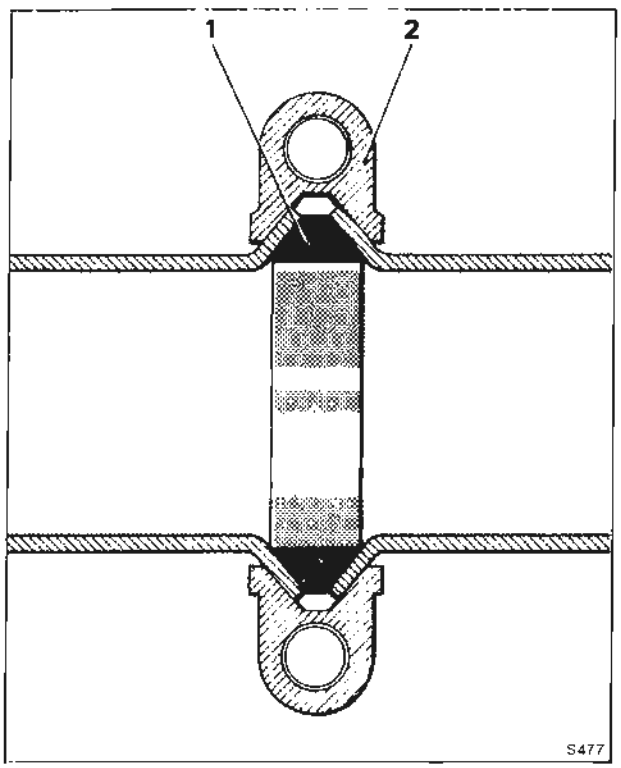

Fig. Q3 Flared exhaust pipe — spherical joint

1 Sealing ring
2 Joint clamp

Exhaust pipes and silencers — To fit

To assemble reverse the procedure given for removal, noting the following points.

1. Ensure that all sliding joints are a good fit in their respective stub pipes to allow for adjustment.
2. The arrow stamped on each silencer must point to the rear when the box is assembled into the system.
3. All sealing rings and pipes must be thoroughly clean and free from scale. If necessary, they can be lightly dressed with fine emery cloth.

To ensure free movement of the joints for correct alignment of the components, the angular faces of the sealing rings and grooves in the spherical clamps should be smeared with a graphite lubricant.

All threads should be oiled to prevent binding.

4. Do not fully tighten the joints until the system has been fitted and manoeuvred to obtain the best run (free from possible fouls) with good joint alignment.
5. When the pipe runs are satisfactory, apply a sealant such as Holts Firegum, into the ends of any straight tube joint. Ensure that the slits down the sides of the silencer stub pipes are covered.

Note

Do not overtighten the 'U' clamps across the sliding joints as this could 'crimp' the inner and outer tubes together, causing difficulty for future dismantling.

6. When fitting the chrome plated tail pipe finishers, ensure the end faces of the outlets are in line and level.
7. Figure Q5 gives the nominal distance from the end of the tail pipes to the outer edge of the rear bumper rubber.
8. The resilient metal exhaust mounts must be set approximately 6,35 mm. (0.250 in.) forward before tightening the 'U' clamp around the exhaust pipe (see Fig. Q6). This offset is to allow for expansion of the system.

© Rolls-Royce Motors Limited 1979
Printed in England

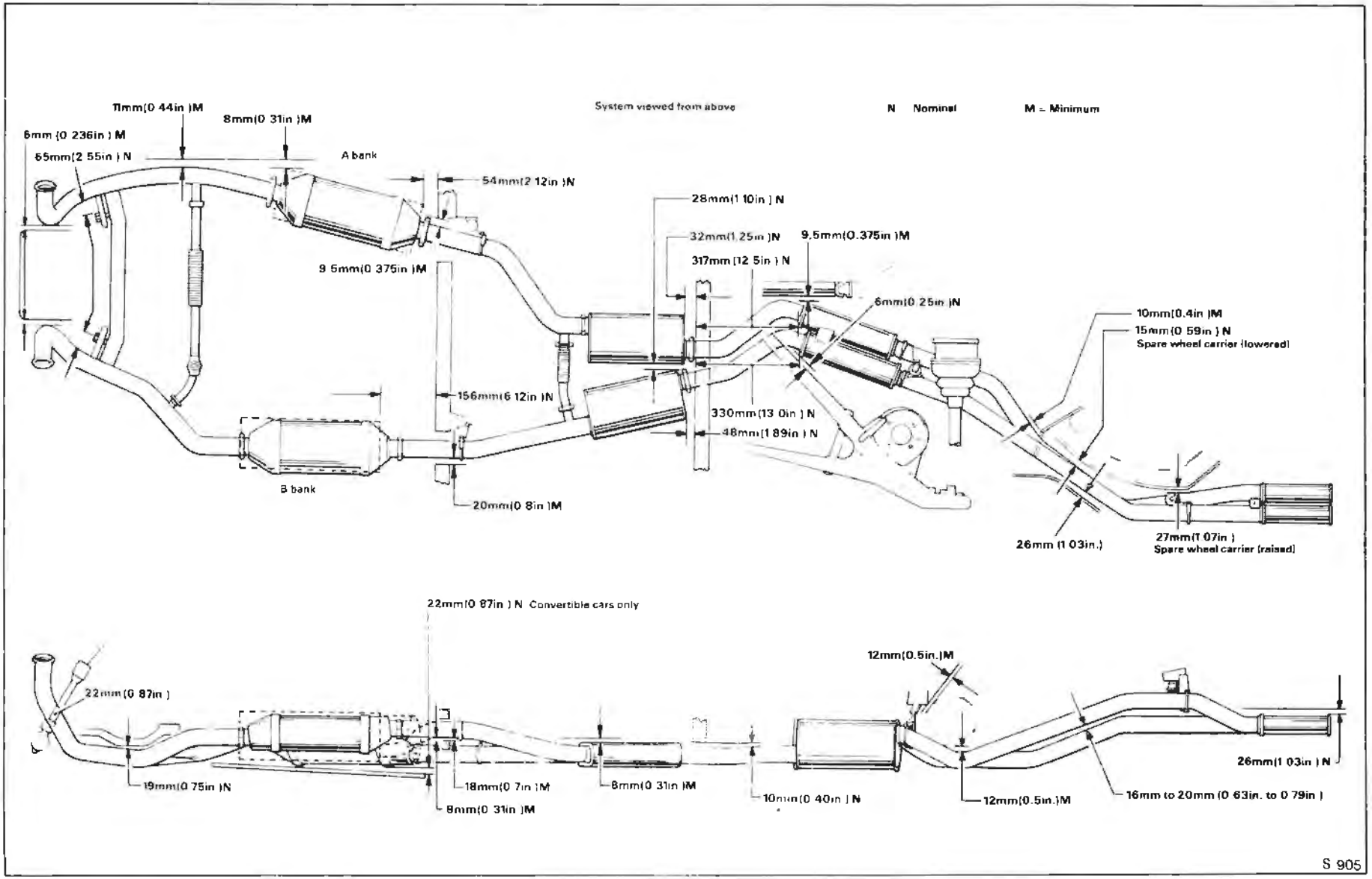

Fig. Q4 Exhaust system – clearance dimensions

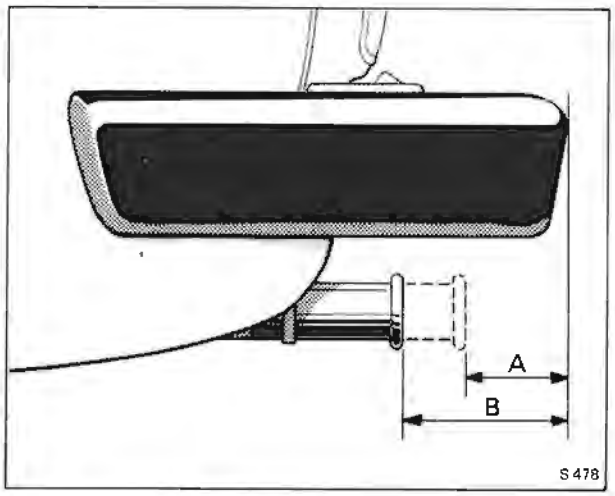

Fig. Q5 Tailpipes – nominal setting
A Rolls-Royce Camargue 30mm. (1.2 in.)
B All other models 63mm. (2.5 in.)

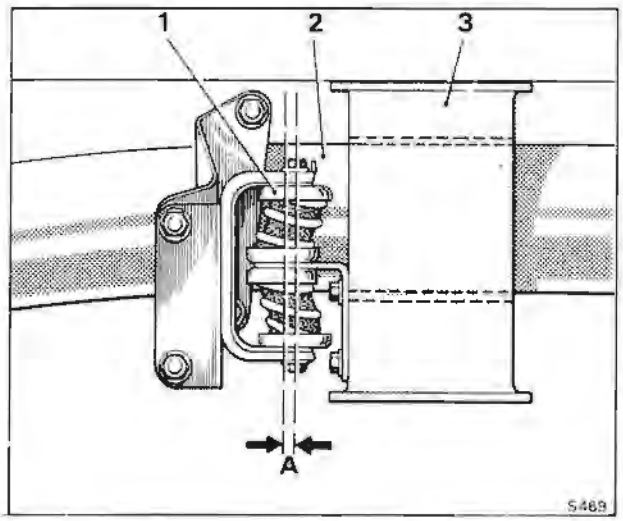

Fig. Q6 Exhaust mount – showing offset
1 Spring mount
2 Exhaust pipe
3 Body crossbeam
A 4,76mm. (0.187 in.)

Exhaust pipes and silencers · To inspect

Inspection should include an investigation to ensure that misalignment has not caused the exhaust system to foul the sub-frames, suspension, body, transmission or engine components with resultant damage to any of these parts.

Inspect each resilient metal mount assembly to ensure that the spring mounts are working efficiently, with the fixing brackets rigidly attached to the underneath of the car body.

Printed in England
© Rolls-Royce Motors Limited 1979

Section Q3

Exhaust pipes, silencers and grass-fire shields

Cars built to the Japanese and North American specifications prior to car serial number 50001

Introduction

The pipes and silencers form a six box twin exhaust system. An intermediate balance pipe is situated just forward of the intermediate silencers and an EGR (exhaust gas recirculation) feed and balance pipe is fitted just forward of the catalytic converters.

On cars built to the 1979 model year specification and onwards, the intermediate balance pipe is not fitted.

Note

Refer to the appropriate Chapter U, Emission Control Systems for information relating to model years.

Cars produced to the North American specifications have grass-fire shields fitted beneath the catalytic converters as shown in Figure Q7.

Cars manufactured to the Japanese specifications have grass-fire shields fitted beneath the complete exhaust system as shown in Figure Q8.

Grass-fire shields – To remove and fit

1. **On cars destined for Japan,** detach the rear shields, the shield covering the intermediate silencers and the shield over the EGR (exhaust gas recirculation) balance pipe.
2. Remove the remaining shields.
3. **On cars destined for U.S.A. and Canada,** remove the shields fitted beneath the catalytic converters.
4. Check that the shields are in good condition and that no breaks or cracks have occurred in the mesh.

If damage to a shield has occurred the shield must be discarded and a new one fitted.

5. Replace the shields by reversing the procedure for removal noting the following points.
6. Refer to Figure Q7 for details of cars produced to the North American specifications.
7. Refer to Figure Q8 for details of cars produced to the Japanese specifications.
8. On cars built to the Japanese specifications, ensure that a minimum gap of 5 mm. (0.20 in.) is maintained between the grass-fire shields and the exhaust system.

Exhaust pipes and silencers – To remove

1. Drive the car onto a ramp and raise the ramp.
2. Detach the rear silencers and pipework at the spherical joints situated behind the intermediate silencers. Remove the sealing rings.
3. Support the weight of the rear silencers assembly.
4. The rear silencers and pipes are mounted at two points which should be dismantled as follows,

(a) at **the mount situated just forward of the drive-shaft.** Unscrew the two ½ in. A/F nuts securing the exhaust pipes bracket to the metal mount bracket, collect the washers and distance pieces.

(b) at **the mount situated adjacent to the spare wheel carrier.** Unscrew the two ½ in. A/F nuts from the 'U' clamp situated around the upper exhaust pipe. Collect the washers and remove the 'U' clamp.

5. Withdraw the rear section of the exhaust system.
6. On cars produced prior to the 1979 model year specifications remove the 'U' clamp and spherical joint and withdraw the intermediate balance pipe (see Figs. Q7 and Q8). Collect the sealing ring from the spherical joint.
7. Release the 'U' clamp in front of the 'A' bank intermediate silencer. Twist the pipe assembly to break the seal and withdraw the silencer.
8. Detach the intermediate pipe at the resilient metal mount and the spherical joint, each situated at the rear of 'A' bank catalytic converter. Collect the sealing ring and remove the pipe.
9. Remove 'A' bank catalytic converter as described in Chapter U.
10. Detach the 'B' bank intermediate silencer and pipe assembly at the spherical joint to the rear of 'B' bank catalytic converter. Collect the sealing ring and withdraw the pipe.
11. Remove 'B' bank catalytic converter and detach the vertical EGR pipe, refer to Chapter U.
12. Remove the forward balance pipe fitted across 'A' and 'B' bank downtake pipes. Collect the sealing ring from the spherical joint.
13. Remove the downtake pipes, refer to Section Q1, Exhaust manifolds – To remove, Operations 1 and 2.

Note

When removing 'U' clamps check all threads for damage and discard any 'U' clamps which are splayed.

Exhaust pipes and silencers – To fit

To assemble, reverse the procedure given for removal, noting the following points.

1. Ensure that all sliding joints are a good fit in their respective stub pipes to allow for adjustment.
2. The arrow stamped on each silencer must point to the rear when the box is assembled into the system.
3. All sealing rings and pipes must be thoroughly clean and free from scale. If necessary they can be lightly dressed with fine emery cloth.
4. To ensure free movement of the joints for correct alignment of the components, the angular faces of the sealing rings and grooves in the spherical clamps should be smeared with a graphite lubricant.

All threads should be oiled to prevent binding.

5. Do not fully tighten the joints until the system has been fitted and manoeuvred to obtain the best run (free from possible fouls) with good joint alignment.
6. When the pipe runs are satisfactory, apply a sealant such as Holts Firegum, into the ends of any straight tube joint. Ensure that the slits down the sides of the silencer stub pipes are covered.

March 1979
TSD 4200

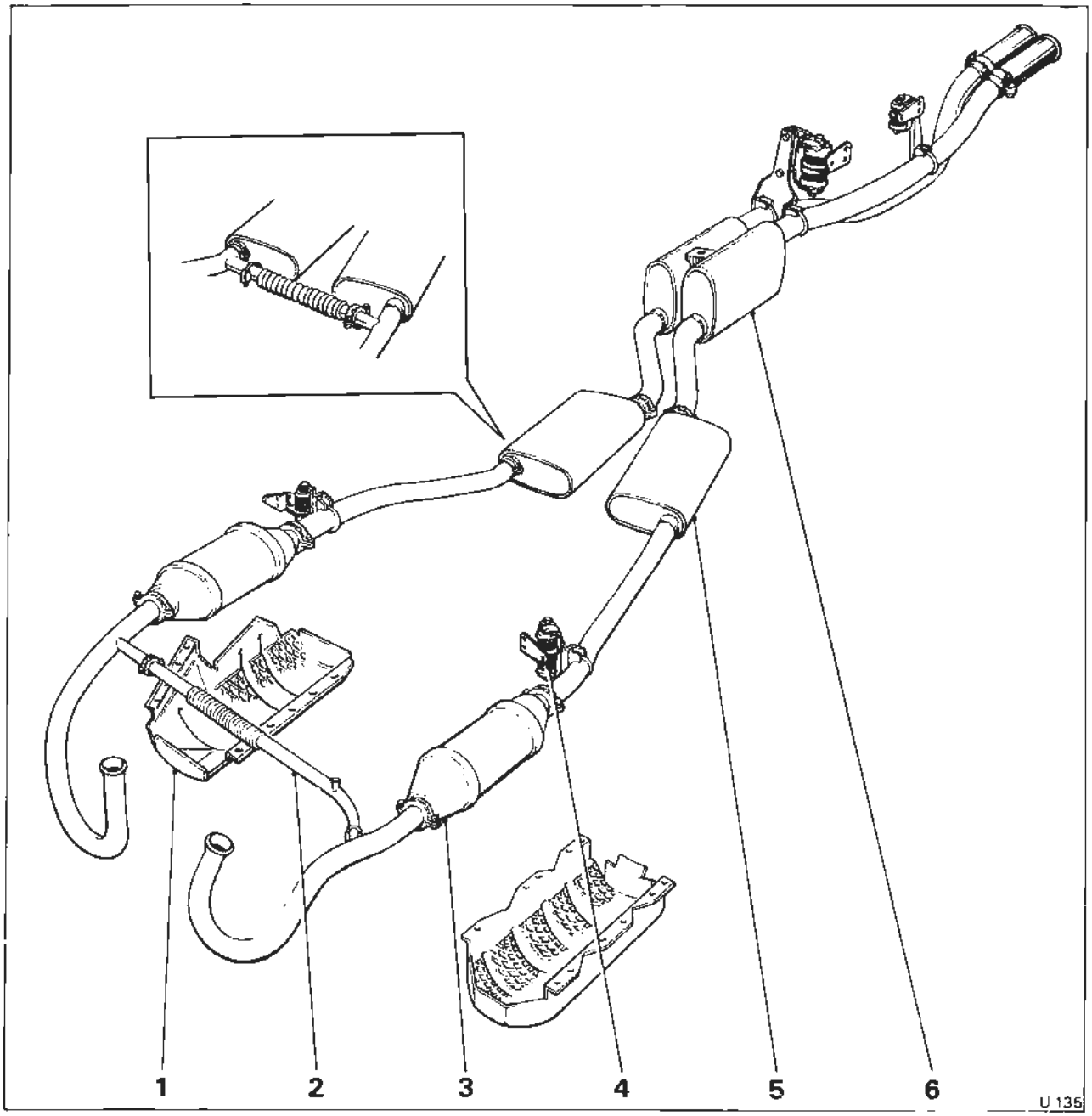

Fig. Q7 Exhaust system and grass-fire shields
(cars destined for U.S.A. and Canada)

1 Grass-fire shield
2 EGR balance pipe
3 'B' bank catalytic converter
4 Vibrashock mount
5 Intermediate silencer
6 Rear silencer
Inset Intermediate balance pipe fitted prior to 1979 model year cars

Note
Do not overtighten the 'U' clamps across the sliding joints as this could 'crimp' the inner and outer tubes together, causing difficulty when dismantling.

7. When fitting the chrome plated tailpipe finishers, ensure the end faces of the outlets are in line and level.

8. Figure Q9 gives the nominal distance from the end of the tailpipes to the outer edge of the rear bumper rubber.

9. The resilient metal exhaust mounts must be set approximately 6,35 mm. (0.25 in.) forward before tightening the 'U' clamp around the exhaust pipe (see Fig. Q6). This offset is to allow for expansion of the system.

Exhaust pipes and silencers — To inspect
Inspection should include an investigation to ensure that misalignment has not caused the exhaust system to foul on the sub-frames, suspension, body, transmission or

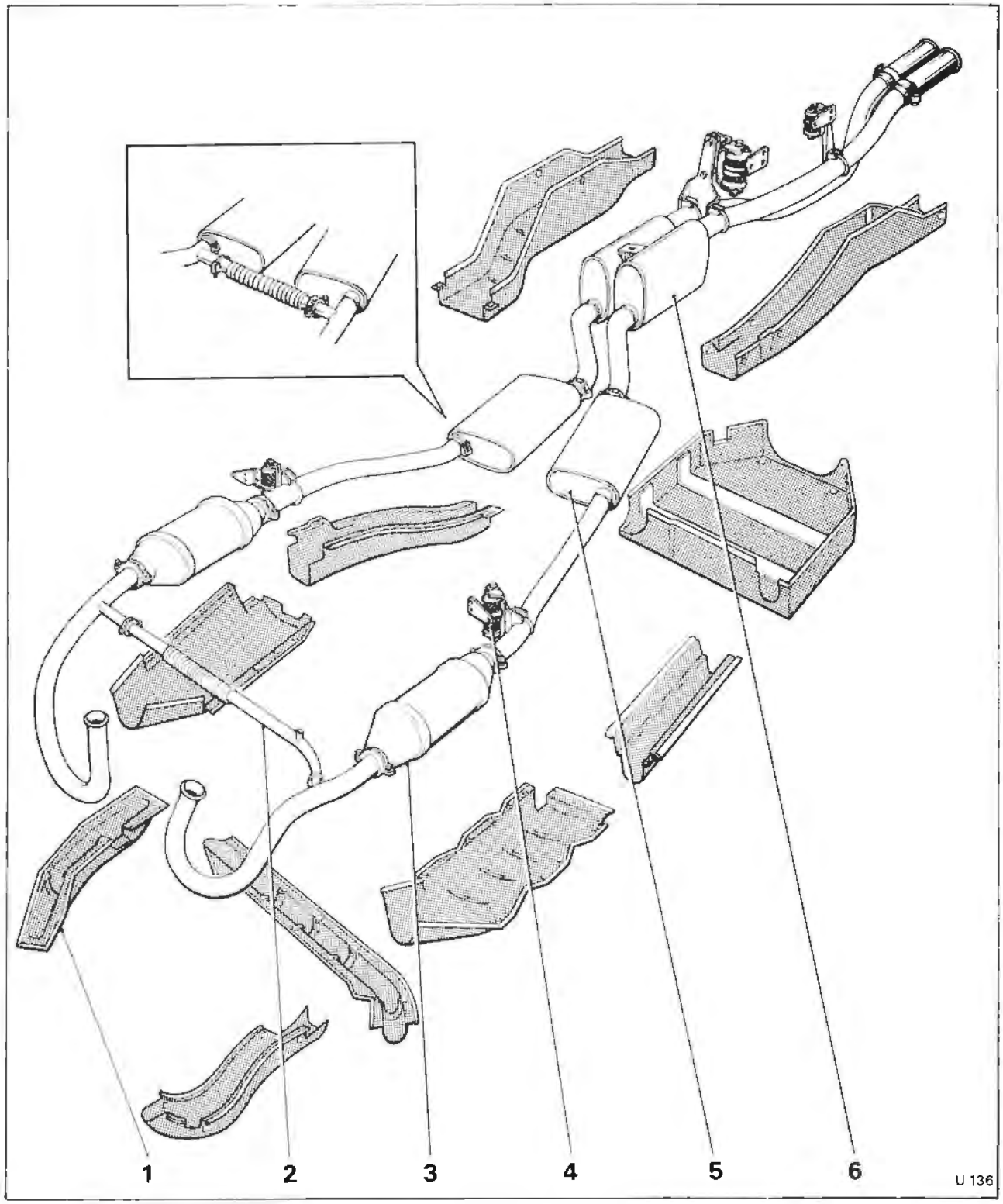

Fig. Q8 Exhaust system and grass-fire shields
(cars destined for Japan)

1 Grass-fire shield
2 EGR balance pipe
3 'B' bank catalytic converter
4 Vibrashock mount
5 Intermediate silencer
6 Rear silencer
Inset Intermediate balance pipe fitted prior to 1979 model year cars

Printed in England
© Rolls-Royce Motors Limited 1979

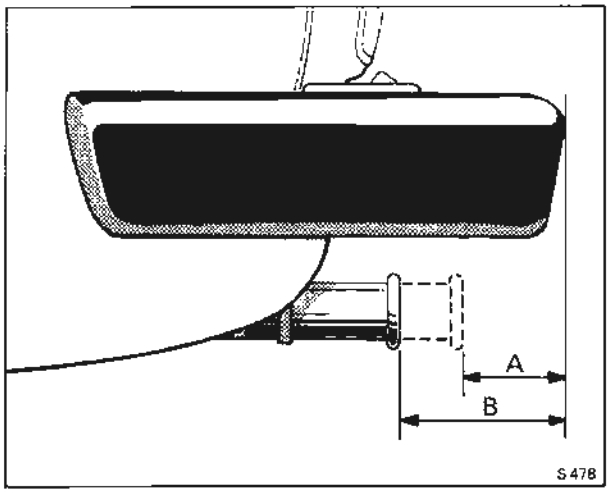

Fig. Q9 Tailpipes – nominal setting
(cars destined for U.S.A. and Canada)
A Rolls-Royce Camargue 65mm. (2.7in.)
B All other models 98mm. (4.0in.)

(cars destined for Japan)
A Rolls-Royce Camargue 30mm. (1.2in.)
B All other models 63mm. (2.5in.)

engine components with resultant damage to any of these parts.

Inspect each resilient metal mount assembly to ensure that the spring mounts are working efficiently, with the fixing brackets rigidly attached to the underneath of the car body.

Section Q4

Exhaust pipes, silencers and grass-fire shields

Corniche and Camargue cars from car serial number 50001

Introduction

The pipes and silencers form a six box twin exhaust system, with a separate tailpipe protruding from the rear of the car on each side (see Fig. Q10).

Cars conforming to the North American emission control regulations have grass-fire shields fitted beneath the catalytic converters only.

Cars produced to the Japanese emission control regulations are fitted with grass-fire shields fitted beneath all exhaust pipework.

Grass-fire shields — To remove and fit

1. **On cars destined for Japan,** detach the rear shields, the shields covering the intermediate silencers and the shields covering the catalytic converters.
2. Remove the remaining shields, detaching those covering the downtake pipes before the EGR balance pipe shield.
3. **On cars destined for U.S.A. and Canada,** remove the shields fitted beneath the catalytic converters.
4. Check that the shields are in good condition and no breaks or cracks have occurred in the mesh.

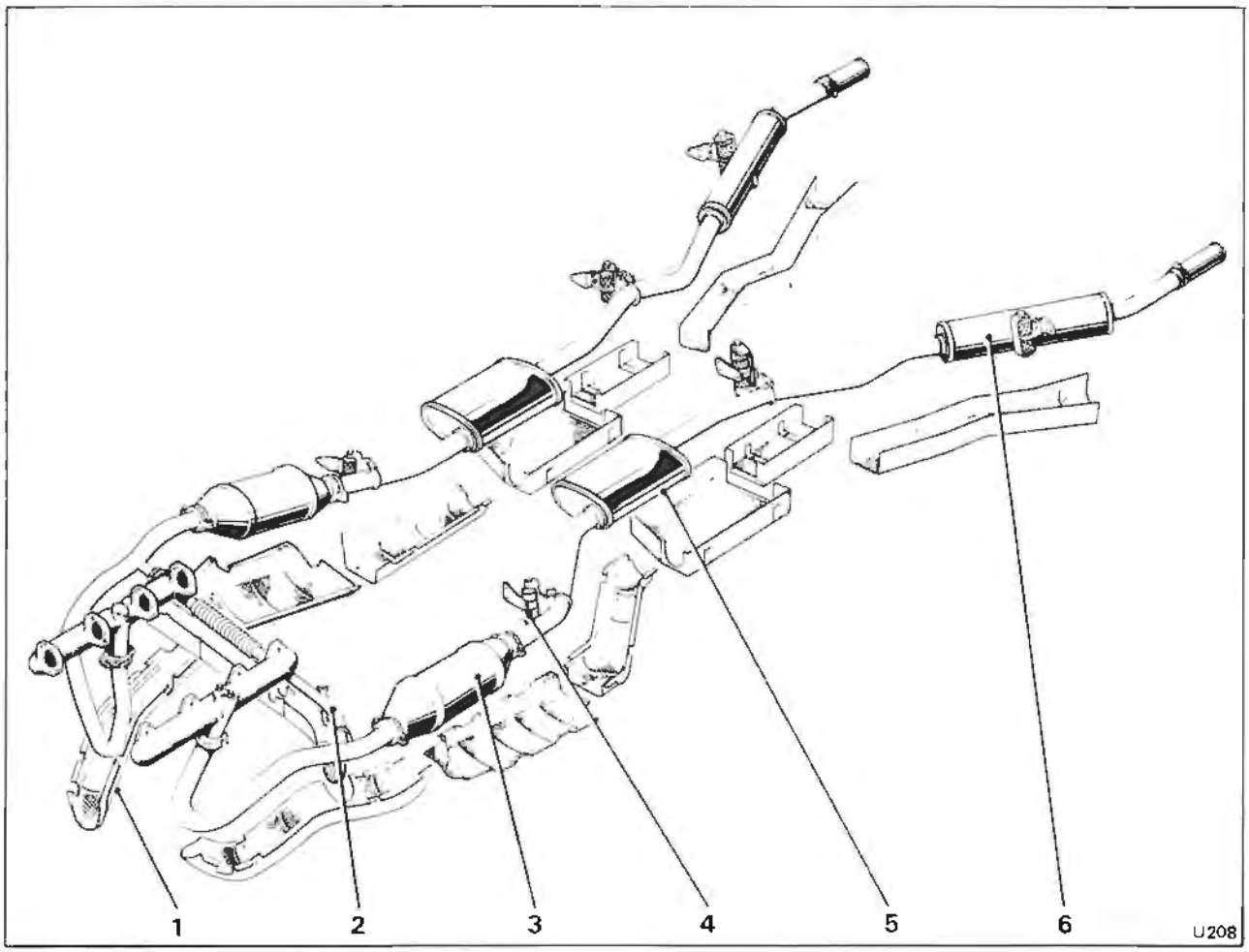

Fig. Q10 Exhaust system and grass-fire shields
(Corniche and Camargue cars from car serial number 50001)

1 Grass-fire shield
2 Front balance/EGR balance pipe
3 Front silencer/Catalytic converter
4 Vibrashock mount
5 Intermediate silencer
6 Rear silencer

Printed in England
© Rolls-Royce Motors Limited 1979

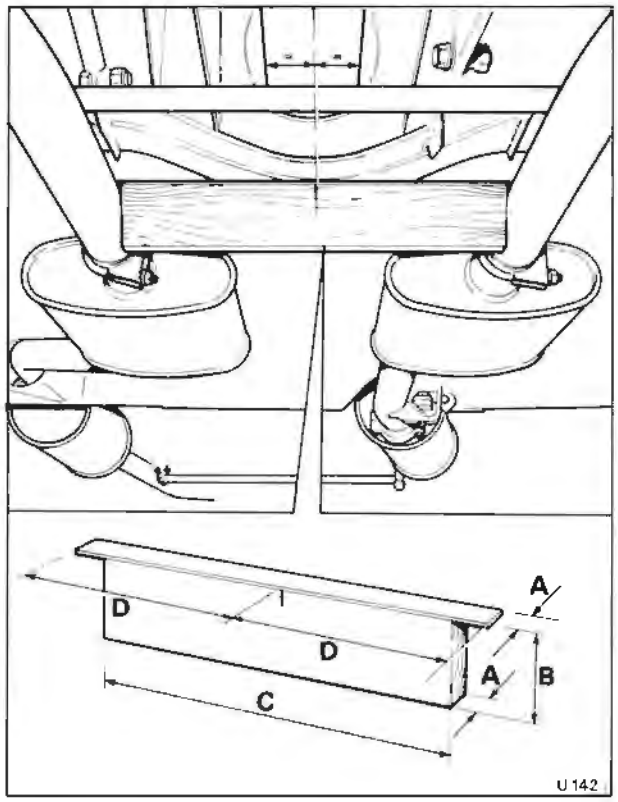

Fig. Q11 Intermediate silencers setting template
A 13mm. (0.5in.)
B 76mm. (3.0in.)
C 346mm. (13.6in.)
D 215mm. (8.45in.)

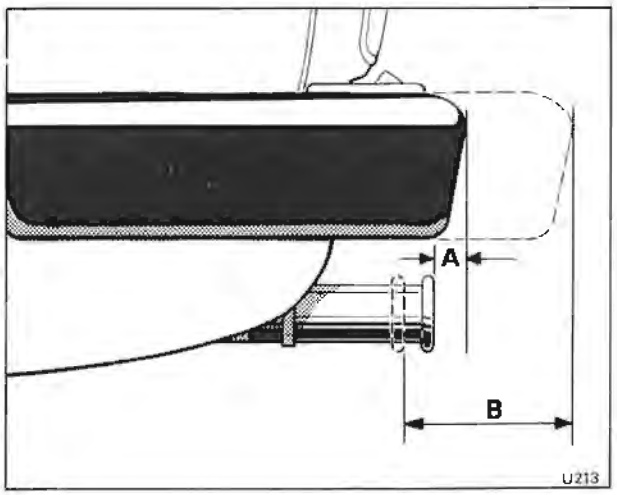

Fig. Q12 Tailpipe — nominal setting
(cars destined for countries other that U.S.A. and Canada)
A Corniche 15mm. (0.6in.)
Camargue 11mm. (0.5in.)

(cars destined for U.S.A. and Canada)
B Corniche 80mm. (3.2in.)
Camargue 75mm. (3.0in.)

If damage has occurred, the shield must be discarded and a new shield fitted.
5. Replace the shields by reversing the procedure for removal.
6. On cars built to the Japanese specification ensure a minimum of 5 mm. (0.20 in.) is maintained between the grass-fire shields and the exhaust system.

Exhaust pipes and silencers — To remove
1. Drive the car onto a ramp, chock the rear wheels and remove the gear range selector thermal cut-out.
2. Raise the ramp.
3. Detach each rear silencer and pipework at the sliding joint situated behind the intermediate silencer and the resilient metal mounts attached to the body under-frame (see Fig. Q10). Twist the pipe at the joint to break the seal and withdraw the rear section of the exhaust system.
4. To detach an intermediate silencer, release the spherical joint at the rear of the catalytic converter/front silencer. Support the weight of the intermediate silencer assembly and detach the bracket supporting the pipework at the crossmember. Withdraw the silencer and pipework assembly.
5. Support the weight of catalytic converter/front silencer. Remove the catalytic converter (see Chapter U) or front silencer (detach the spherical joint situated in front of the assembly).
6. Detach the vertical EGR pipe (if fitted) refer to Chapter U.
7. Remove the balance pipe fitted across the downtake pipes. Collect the sealing ring from the spherical joint.
8. Remove the downtake pipes, refer to Section Q1, Exhaust manifolds — To remove, Operations 1 and 2.

Exhaust pipes and silencers — To fit
To assemble, reverse the procedure given for removal, noting the following points.
1. Ensure that all sliding joints are a good fit in their respective stub pipes to allow for adjustment.
2. The arrow stamped on each silencer must point to the rear when the box is assembled into the system.
3. All sealing rings and pipes must be thoroughly clean and free from scale. If necessary, these can be lightly dressed with fine emery cloth.
4. To ensure free movement of the joints for correct alignment of the components when assembling, the angular faces of the sealing rings and grooves in the spherical clamps should be smeared with a graphite lubricant.

All threads should be oiled to prevent binding.
5. Do not fully tighten any joints until the system has been fitted and manoeuvred to obtain the best run (free from possible fouls) with good joint alignment (see Fig. Q10).
6. Set the pipes behind the intermediate silencers equidistant about the centre line of the car. Use a wooden block (see Fig. Q11) fitted between the stub pipes of the intermediate silencers. Align a central mark on the block to the mid-point of the transmission tunnel.

Ensure that the tailpipe finishers lie in the centre of each rear body moulding.
7. When the pipe runs are satisfactory, apply a sealant

such as Holts Firegum, into the ends of all straight tube joints especially covering the slits down the sides of the silencer stub pipes.

8. The resilient metal mounts must be set approximately 6,35 mm. (0.250 in.) forward before tightening the 'U' clamp around the exhaust pipe. This offset is to allow for expansion of the system.

9. Finally, set the tailpipe finishers referring to Figure Q12 for the nominal distance from the end of the finishers to the outer edge of the rear bumper.

Exhaust pipes and silencers — To inspect

Inspection should include an investigation to ensure that misalignment has not caused the exhaust system to foul on the sub-frame, suspension, body, transmission or engine components with resultant damage to any of these parts.

Inspect each resilient metal mount assembly to ensure that the spring mounts are working efficiently and are rigidly attached to the underneath of the body.

Printed in England
© Rolls-Royce Motors Limited 1979

Printed in England

© Rolls-Royce Motors Limited 1980

April 1980

TSD 4200

Section Q5

Exhaust pipes, silencers and grass-fire shield

Cars built to the Californian 1980 Model year specification (Fuel injection system)

Introduction

The exhaust system is basically a dual pipe system that utilises a single three-way catalytic converter (see Fig. Q13).

Exhaust gases are discharged into an exhaust manifold fitted one on either side of the engine. From the central take-off on each manifold the exhaust gases pass downwards via the downtake pipes.

'A' bank down-take pipe passes under the engine to combine with the 'B' bank down-take pipe just prior to the catalytic converter. After the catalytic converter the exhaust system reverts back to a dual system with twin intermediate and rear silencers.

The front half of the exhaust system is identical on all models produced to this specification, however, minor changes are incorporated in the rear half to allow for the different suspension fitted to coach-built cars.

A proportion of the exhaust gas is taken from a connection on the top of 'B' bank exhaust manifold and recirculated through a vacuum operated metering valve into the plenum chamber for induction into the engine.

For details of the exhaust gas recirculation system and the catalytic converter, refer to the appropriate section of Chapter U, Emission control systems.

Exhaust pipes, silencers and grass-fire shield - To remove (see Fig. Q13)

The exhaust system comprises a number of individual sections. The sections can be removed and replaced without the necessity of having to disturb the complete system on each occasion.

1. Drive the car onto a ramp.

2. Ensure that the normal workshop safety precautions are carried out.

3. Raise the ramp.

Tailpipe finisher

4. Unscrew the clamp bolt securing the tailpipe finisher and withdraw the finisher. Repeat the operation to the other tailpipe finisher. **On Corniche and Camargue cars** the finisher is retained by a worm drive clip.

Rear silencer assembly

5. Locate the exhaust system joint situated at the rear of the intermediate silencer assembly.

6. Unscrew the nuts from the pipe clamp and free the clamp.

7. Unscrew the two worm drive clips situated around the rear silencer and lift the clips out of the saddle brackets. **On Corniche and Camargue cars** unscrew the two setscrews retaining the rear silencer assembly to the mounting bracket.

8. Support the weight of the intermediate silencers.

9. Temporarily support the weight of the rear silencer assembly.

10. Locate the exhaust system mounting bracket adjacent to the road wheel drive-shaft. Unscrew the nut securing the exhaust to the mounting bracket, collect the washer and withdraw the bolt. Collect the washer fitted under the head of the bolt.

11. Twist the pipe to 'break' the joint seal and withdraw the rear silencer assembly. Collect the clamp bracket from the joint behind the intermediate silencer.

12. Repeat Operations 5 to 11 inclusive to the other rear silencer assembly.

Grass-fire shield

13. Remove the screws situated around the edge of the grass-fire shield and carefully withdraw the shield (the edges may be sharp therefore handle with caution to avoid possible injury).

Intermediate silencers assembly

14. Support the weight of the catalytic converter.

15. Unscrew the setscrew from the bottom of the exhaust mounting situated forward of the exhaust system junction.

16. Unscrew the two nuts and collect the washers from the spherical clamp situated at the rear of the catalytic converter. Free the joint and collect the two halves of the clamp together with the bolts.

17. Withdraw the intermediate silencers assembly and collect the sealing ring from the joint at the rear of the catalytic converter.

Label the sealing ring for identification purposes.

Catalytic converter

Full details for removing the catalytic converter are given in the appropriate section of Chapter U. However, if the complete exhaust system is to be removed the converter should be withdrawn at this stage of the procedure after dismantling the joint in front of the assembly as follows.

18. Unscrew the three nuts situated around the exhaust joint in front of the catalytic converter. Collect the washers and withdraw the three bolts.

19. Free the joint, withdraw the catalytic converter and collect the sealing ring.

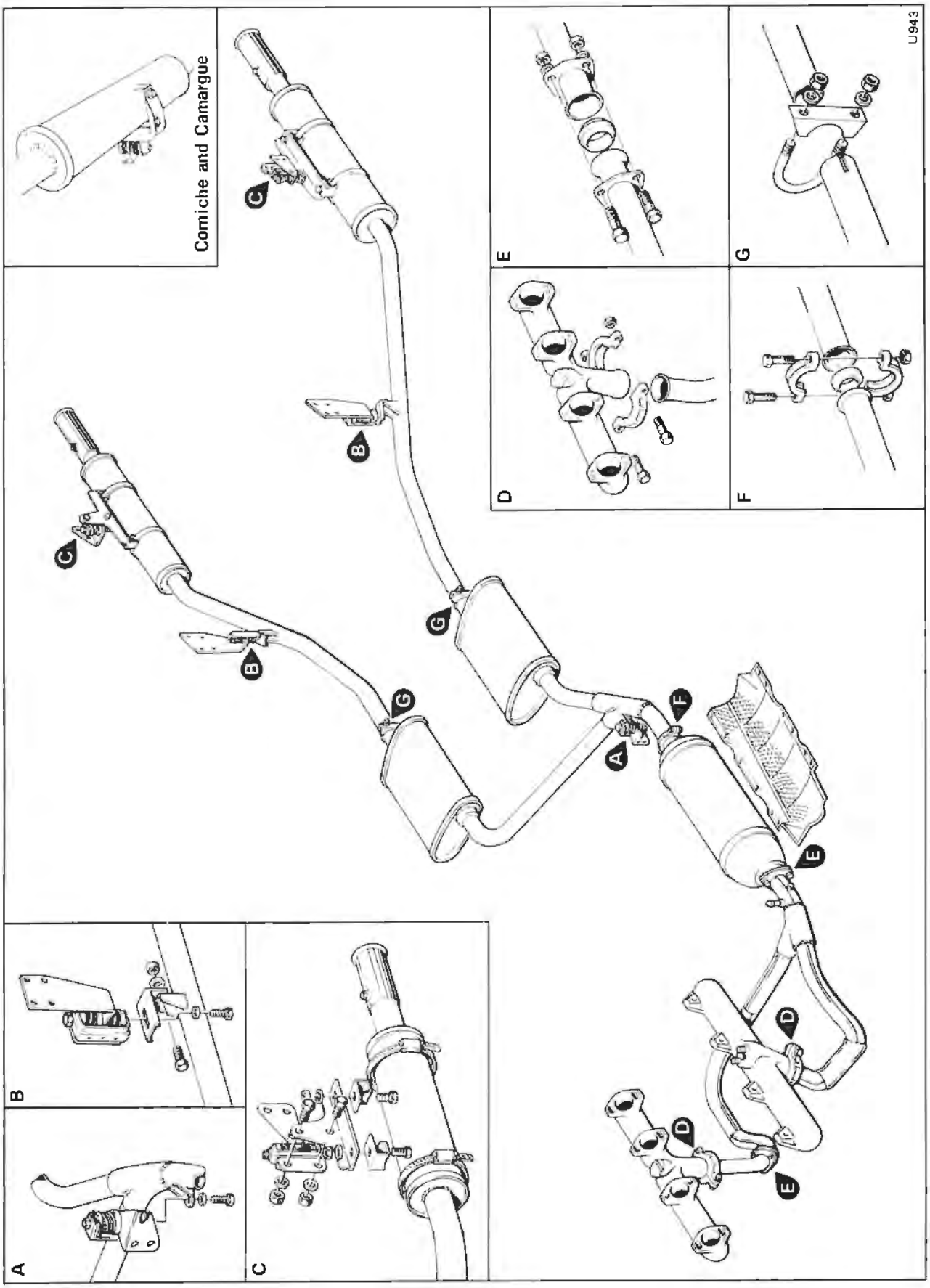

Fig. Q13 Exhaust pipes, silencers and grass-fire shield

Label the sealing ring for identification purposes.

'Lagged' downtake pipes assembly

20. Support the weight of the downtake pipes assembly.

21. Locate the lower downtake pipe joint on 'A' bank side of the engine (adjacent to the oil level indicator fitted into the side of the sump).

22. Unscrew the three nuts situated around the joint. Collect the washers and withdraw the three bolts. Free the joint.

23. Locate the spherical clamp at the downtake pipe to exhaust manifold joint on 'B' bank side of the engine.

24. Unscrew the two nuts and collect the washers from the spherical clamp, free the joint and collect the two halves of the clamp.

25. Withdraw the 'lagged' downtake pipes assembly and collect the sealing ring from the lower joint on 'A' bank side.

Label the sealing ring for identification purposes.

26. Unscrew the two nuts from the spherical joint connecting the short downtake pipe on 'A' bank side of engine to the exhaust menifold. Collect the washers and withdraw the bolts. Free the joint and withdraw the short downtake pipe.

27. Remove the exhaust manifolds as described in Section Q1, Exhaust manifold, noting that the choke stove pipes mentioned in Operation 3, are replaced by the EGR feed pipe.

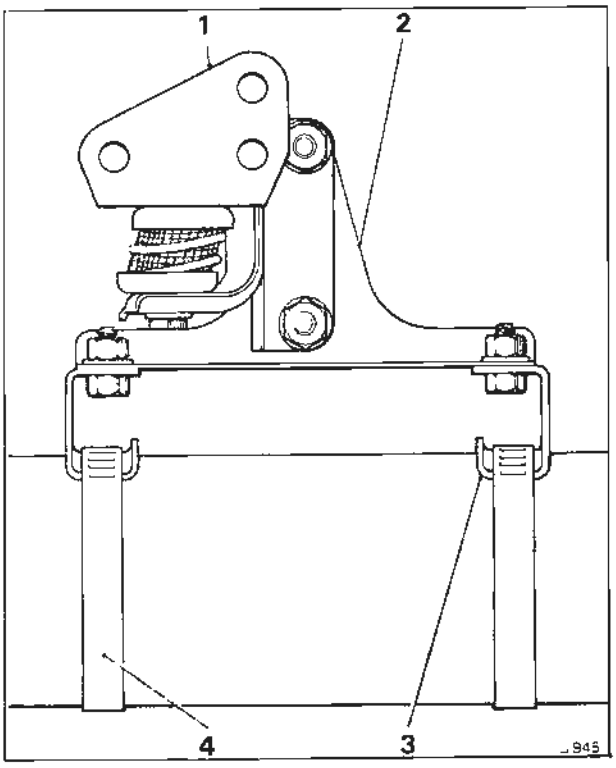

Fig. Q14 Rear silencer mounting bracket
1 Mount bracket
2 Hanger bracket
3 Saddle bracket
4 Worm drive clip

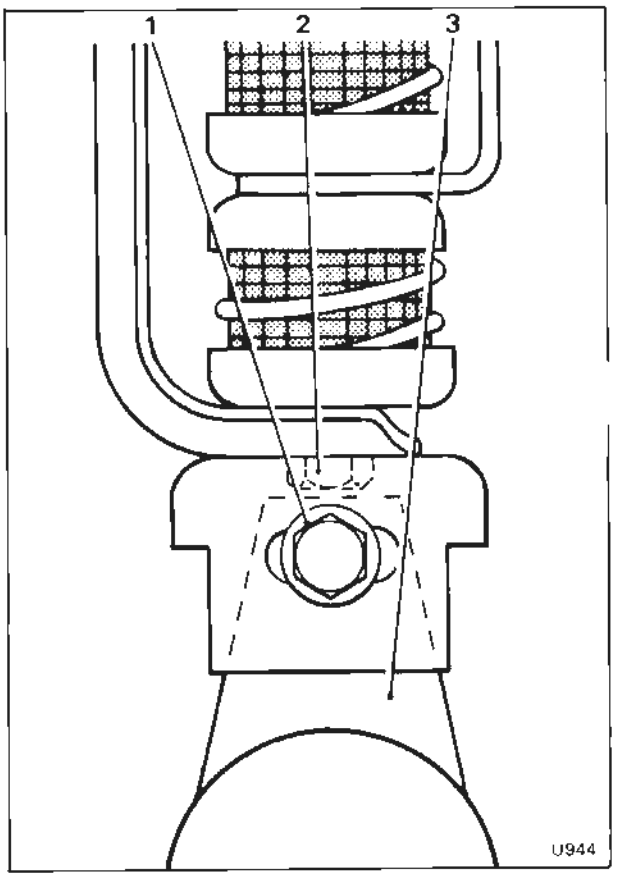

Fig. Q15 Intermediate mount
1 Nut
2 Setscrew
3 Triangular bracket

Exhaust pipes, silencers and grass-fire shield - To fit

To assemble, reverse the procedure given for removal, noting the following points.

1. Ensure that the sliding joints are a good fit in their respective stub pipes to allow for adjustment.

2. All sealing rings and pipes must be thoroughly clean and free from scale. If necessary, these can be lightly dressed with fine emery cloth.

3. To ensure free movement of the joints for correct alignment of the components when assembling, the sealing rings, pipe flares and grooves in the spherical joint clamps should be lightly smeared with either graphite lubricant or 'Neverseez' assembly compound.

Do not allow the assembly compound to enter the exhaust system, particularly upstream (in front) of the catalytic converter, otherwise damage to the converter assembly will result.

4. Apply 'Neverseez' compound to the clamp bolt threads before assembly.

5. The parts should be loosely assembled and then manoeuvred to give the best alignment (free from possible fouls), before the joints are tightened.

6. When the pipe runs are satisfactory, apply a sealant such as Holts Firegum, into the ends of all

Printed in England
© Rolls-Royce Motors Limited 1980

straight tube joints especially covering the slits down the sides of the silencer stub pipes.

7. On Silver Shadow II, Silver Wraith II and Bentley T2 cars assemble each rear silencer bracket as shown in Figure Q14. Fit the rear silencers and exhaust pipes.

Tighten the setscrew on the intermediate mount (see Fig. Q15) but leave the nut fastening the mount to the exhaust, finger tight.

Tighten the worm drive clips around the rear silencer, ensuring that the triangular bracket on the intermediate mount remains vertical.

Pre-load the intermediate resilient metal mounts and tighten the nut fastening the mount to the exhaust. Ensure that the triangle bracket remains vertical.

Ensure that there is at least 13 mm.(0.512 in.) clearance between the rear silencer and the spare wheel carrier (left-hand side) and the cubby box (right-hand side). Also ensure that the tailpipe and silencers do not foul the rear skirt of the body.

8. The resilient metal mounts must be set approximately 6,35 mm. (0.250 in.) forward to allow for expansion of the system.

9. Finally, set the tailpipe finishers 8,63 cm. (3.400 in.) in from the outer edge of the bumper.

Chapter R

Wheels and tyres

Section
R1 Wheels
R2 Tyres

Printed in England

© Rolls-Royce Motors Limited 1977

July 1977

T.S.D. 4200

Chapter R

Issue record sheet 1

October 1981

The dates quoted below refer to the issue date of individual pages within this chapter.

Section	R1	R2
Page No.		
1	Jul 77	Oct 81
2	Jul 77	Oct 81
3	Jul 77	Jul 77
4	Jul 77	Jul 77
5		Jul 77
6		Jul 77
7		Jul 77
8		Jul 77
9		Jul 77
10		
11		
12		
13		
14		
15		
16		
17		
18		
19		
20		
21		
22		
23		
24		
25		
26		
27		
28		
29		
30		
31		
32		
33		
34		
35		
36		
37		
38		
39		
40		
41		
42		
43		
44		
45		
46		
47		
48		

Printed in England
© Rolls-Royce Motors Limited 1981
T.S.D. 4200

Section R1

Wheels

Introduction

The heavy gauge pressed steel wheels have flat ledge rims and are secured with five nuts.

The front wheel bearings are packed with grease on initial assembly and should require no further attention.

Wheel discs

Silver Shadow II and Bentley T2

The wheel discs are ventilated and are secured to the wheels by a locating lug and a steel spring ring. The claw ring engages with three equally spaced protrusions on the wheel.

Silver Wraith II, Corniche and Camargue

The wheel trims are secured to the wheels by eight equally spaced spring clips situated around the circumference of the wheel trim. The wheel discs are a push-on fit over the three equally spaced protrusions on the wheel.

Wheels - To remove

1. Apply the parking brake.
2. Remove the stainless steel snap-on wheel discs with the tommy bar provided in the tool kit.

On Silver Shadow II and Bentley T2 cars, place the tommy bar in one of the positions indicated by the arrows shown in Figure R1 noting the relationship between these arrows and the tyre valve, then press the tommy bar towards the tyre. Do not twist the tommy bar.

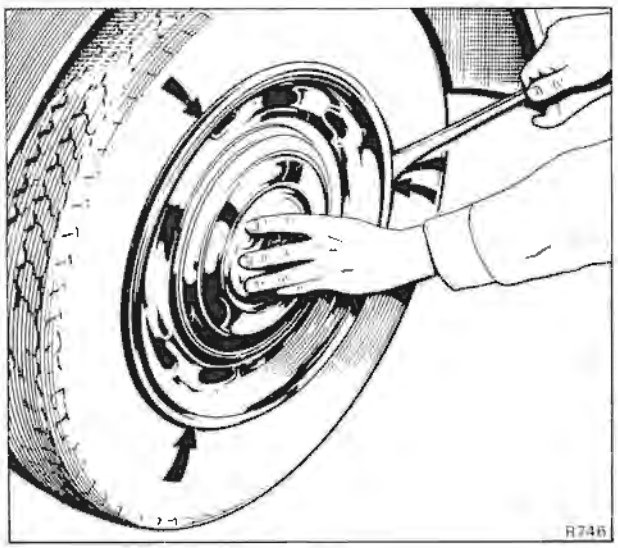

Fig. R1 Removing a wheel disc (Silver Shadow II and Bentley T2)

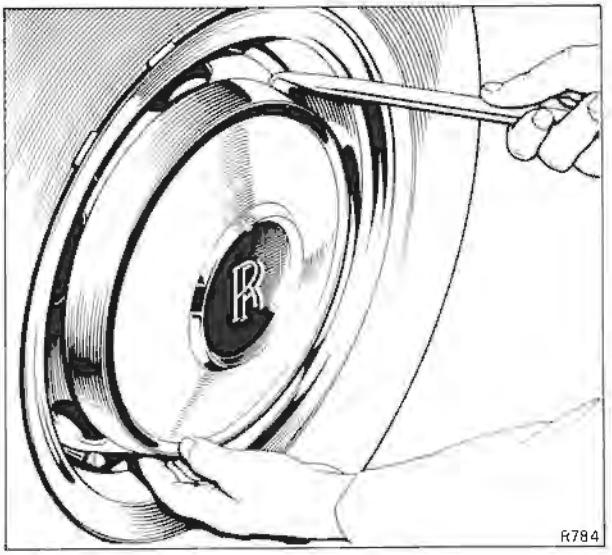

Fig. R2 Removing a wheel disc (Silver Wraith II, Corniche and Camargue)

On Silver Wraith II, Corniche and Camargue cars, the wheel discs and wheel trims are separate items. To remove a wheel disc place the tommy bar in position as shown in Figure R2 and press the tommy bar downwards.

To remove a wheel trim place the tommy bar in position as shown in Figure R3 then press the

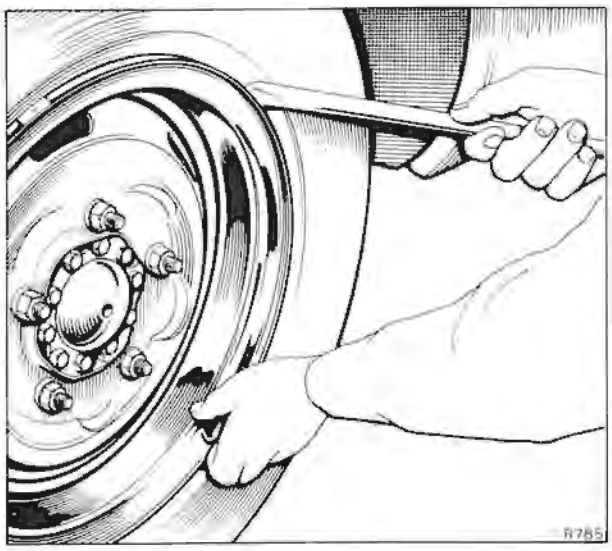

Fig. R3 Removing a wheel trim (Silver Wraith II, Corniche and Camargue)

Printed in England
© Rolls-Royce Motors Limited 1977

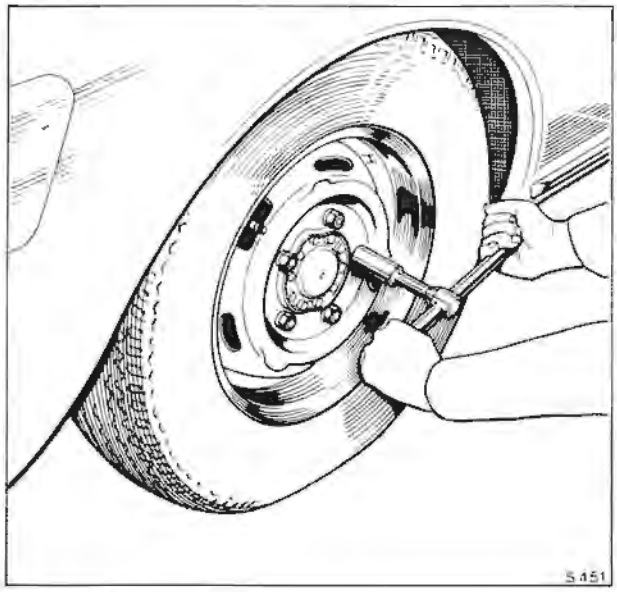

Fig. R4 Releasing the wheel retaining nuts

tommy bar outwards towards the tyre; do not twist the tommy bar. Repeat this operation at several points around the circumference of the wheel.

Care should be taken when removing both the wheel discs and wheel trims not to damage the tyre valve.

3. Slacken the wheel retaining nuts approximately half a turn before raising the car (see Fig. R4). Nuts on the left-hand wheels have left-hand threads and nuts on the right-hand wheels have right-hand threads. An arrow and the word 'OFF' stamped on each wheel nut indicates the direction of removal.

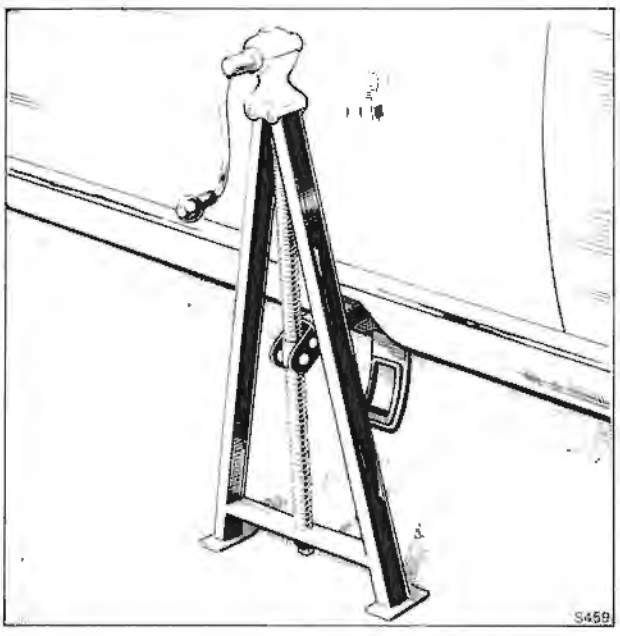

Fig. R5 Jack correctly positioned

4. To remove the rear wheels, position a jack in the centre of the final drive casing on the rear suspension crossmember. Place a piece of soft wood between the jack head and the casing and raise the wheels clear of the ground.

When removing the front wheels position a jack under the front pivot mounting for the lower triangle levers on the sub-frame. Place a piece of soft wood between the jack head and the mounting and raise the front wheels clear of the ground.

Alternatively on Silver Shadow II, Bentley T2, Silver Wraith II and Corniche cars, open the cover plate in the sill, fit the jack in position as shown in Figure R5 and raise the side of the car.

On Camargue cars open the appropriate cover plate in the sill, fit the jack in position as shown in Figure R6 and raise the wheel.

5. Remove the nuts and wheel.

Wheels - To fit

Fit the wheel by reversing the procedure described for its removal, noting the following points.

1. Ensure that the spherical seatings of the nuts and wheels are not damaged.

When renewing a damaged wheel stud, it may be necessary to use a press of 2 032 kg. (2 tons) capacity to remove and fit the wheel stud. When fitting the new wheel stud it should be rotated until the splines line up with those already cut in the hub and then pressed into position. Adequate interference is maintained to enable each wheel stud to be renewed approximately three times when in service.

2. Lightly coat the spherical seats of the nuts with grease before fitting.

3. Fit the nuts and then torque tighten to between 6,22 kgf.m. and 6,91 kgf.m. (45 lbf.ft. and 50 lbf.ft.).

Failure to observe the torque figures when tightening the nuts can cause damage to the spherical seating faces and cause difficulty in removing and fitting the nuts.

Spare wheel - To remove

1. Turn the bolt in the luggage compartment anti-clockwise (see Fig. R7) using the box spanner and tommy bar (universal box spanner and wheelbrace on Corniche and Camargue cars) provided in the tool kit. This operation lowers the carrier and facilitates removal of the spare wheel.

On cars fitted with a spare wheel retainer it is necessary to release the retainer before lowering the spare wheel platform.

To release the retainer remove the large rubber plug situated in the luggage compartment floor (see Fig. R7) and lift the cable passing through the small bracket then visible. Turn the toggle parallel to the cable and push the toggle down through the bracket. Lower the spare wheel platform by turning the lowering bolt anti-clockwise and remove the spare wheel, passing the cable out through the wheel stud hole.

Spare wheel - To fit onto spare wheel platform
Fit the spare wheel on to the platform by reversing the procedure described for its removal, noting the following points.
1. Rotate the spare wheel so that the tyre valve is in its most rearward position and is visible through the access hole in the luggage compartment.
2. Fit the spare wheel retainer (if fitted) as follows.

Raise the platform, pass the cable, with both toggles parallel, down through the bracket and the nearest stud hole in the spare wheel. Allow the lower toggle to turn, so locking across the stud hole in the wheel and then turn the upper toggle to lock across the bracket.

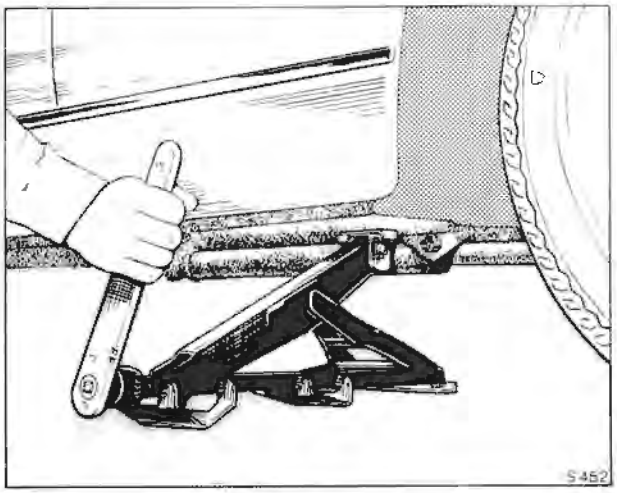

Fig. R6 Jack correctly positioned (Camargue)

Spare wheel stowage
If attention is drawn to a rattle from the rear of the car, it may be that the spare wheel carrier is incorrectly adjusted, thus allowing slight movement of the spare wheel under its clamping arrangement.

Adjustment can be effected by slackening the nut and bolt connecting the carrier to the operating tube which forms the rear suspension point of the carrier. As this bolt passes through a slotted hole in the operating tube, it will then be possible to move the carrier to a position which will allow the tyre to be correctly clamped. Tighten the nut and bolt after adjustment.

Wheel and tyre balance
Wheels can be balanced using either a vertical or horizontal type of balancing machine.

The Dunlop adapter plate AP30 is designed for use in conjunction with the balancing machine WBM 20.

Balancing machines are also obtainable from Hofmann Balancing Techniques Limited, Carl Schenck (UK) Limited and Leycock Engineering Limited.

If the specified balancing equipment is not available reference should be made to Figures R8 and R9. These illustrations show two types of small adapter collars which convert existing wheel balancing equipment for use on spigotted road wheels.

When fitting the adapter collar, it must be accurately centralised on the adapter plate.

The manufacturer's instructions must be observed when using the balancing equipment, and the following points noted.
1. When checking wheel balance on the car, it is essential that, after stopping the car the weight of the car is removed from the tyres as soon as possible. This prevents temporary 'flats' from forming on the tyres. No attempt should be made to balance wheels on which 'flats' have formed, as the static balance may be affected by as much as 720 gm.cm. (10 oz.in.).
2. Before balancing ensure that the tyres are inflated to the correct cold inflation pressure (see Page R2-1).
3. The static and dynamic balance of the wheels should be within 216 gm.cm. and 360 gm.cm. (3 oz.in. and 5 oz.in.) respectively.
4. Balance weights should be removed and fitted with a special tool supplied by the manufacture of the wheel balancing machine. When fitting the weights to the rim, only sufficient force should be used to secure them; excessive force will only tend to slacken them.

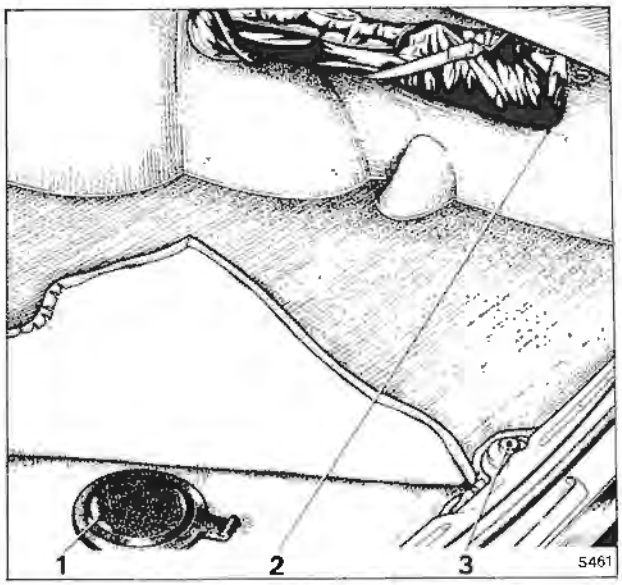

Fig. R7 Luggage compartment
1 Rubber plug
2 Heavy tools stowage bag
3 Lowering bolt for spare wheel platform

Printed in England
© Rolls-Royce Motors Limited 1977

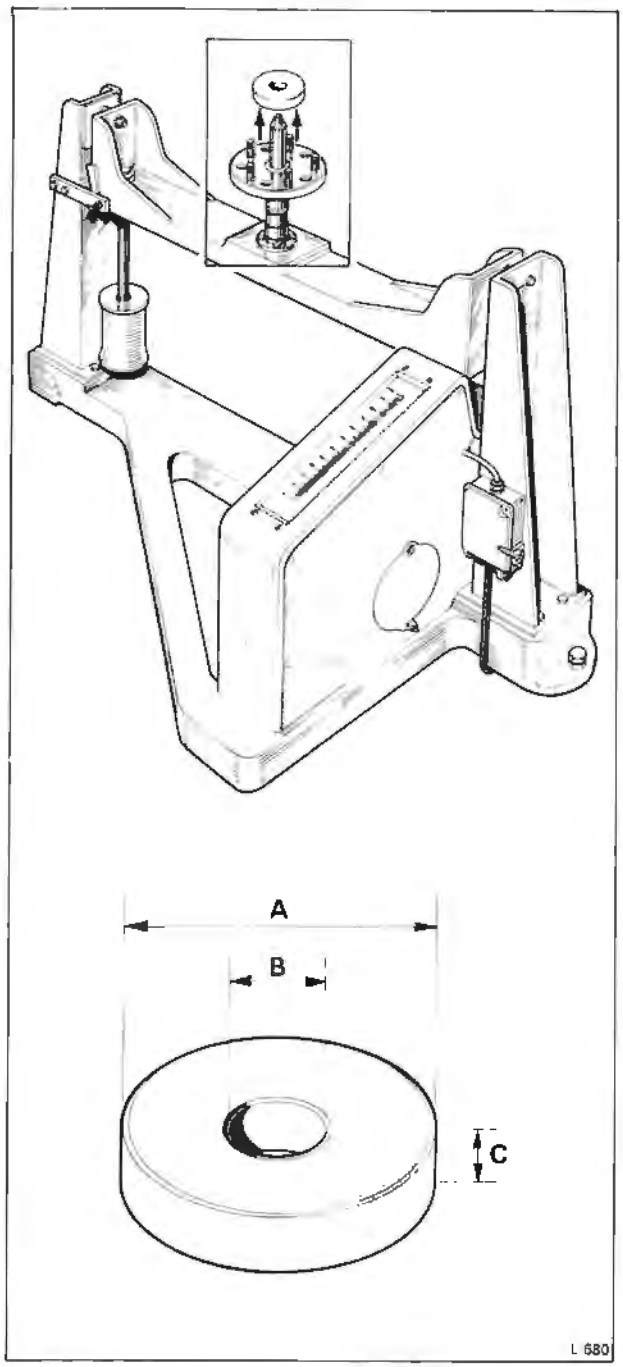

Fig. R8 Horizontal type of balancing machine with adapter for spigotted wheels

- **A** 11,75 cm. minus 0,005 cm. (4.626 in. minus 0.002 in.)
- **B** Bore to give 0,051 mm. (0.002 in.) to 0,076 mm. (0.003 in.) clearance on spindle
- **C** 2,54 cm. (1.0 in.)

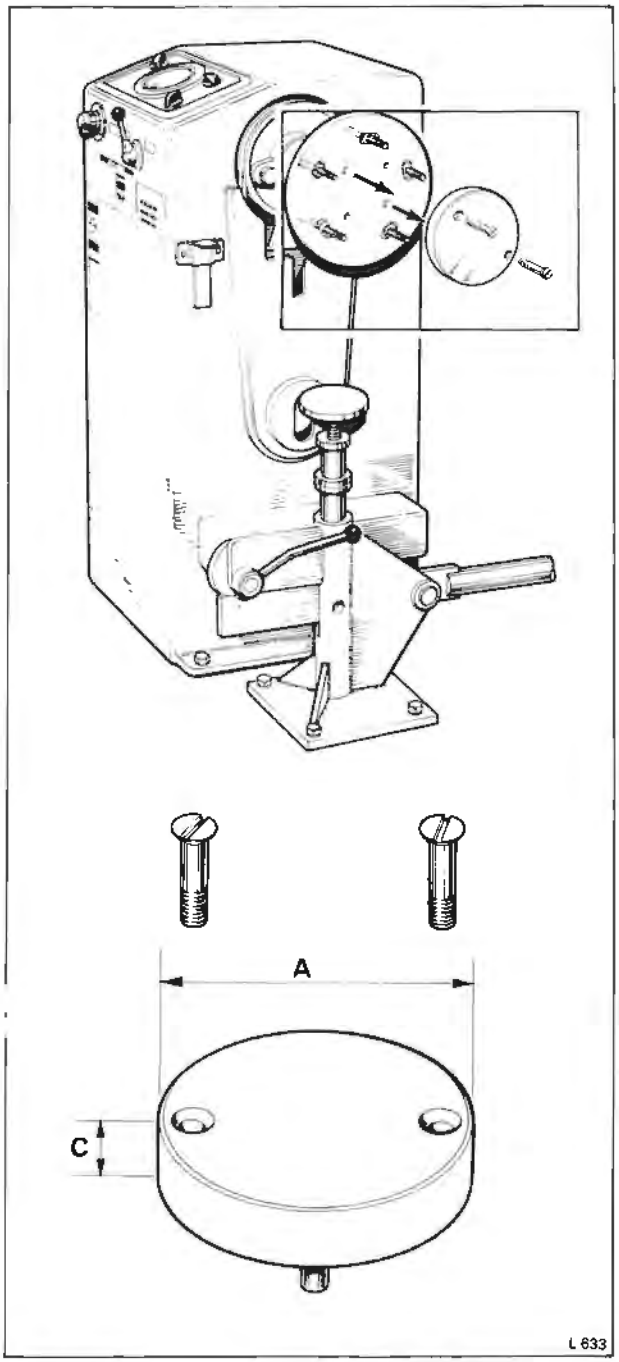

Fig. R9 Vertical type of balancing machine with adapter for spigotted wheels

- **A** 11,75 cm. minus 0,005 cm. (4.626 in. minus 0.002 in.)
- **C** 2,54 cm. (1.0 in.)

5. After fitting balance weights, paint the steel fittings to prevent them from rusting.

6. If an 'on-the-car' wheel balancing machine is available, it should be used to check the balance of the front wheels after they are fitted to the car. This type of balancing machine enables any small amount of run-out which exists in the tyre, wheel, hub and brake disc, to be removed.

7. When checking the balance of each wheel, **the wheels should not be interchanged to give even tyre wear.**

Section R2

Tyres

Introduction

All Silver Shadow II, Silver Wraith II, Corniche and Camargue cars (with the exception of certain cars destined for U.S.A. and Canada) must be fitted with HR70 HR15 (235/70 HR15) radial-ply tyres.

On certain cars destined for U.S.A. and Canada, HR70 - 15 tyres may be fitted.

New tyres

On no account should tyres other than those approved in this Workshop Manual or in subsequent Service Bulletins be fitted to the car, as this could have undesirable effects on the handling and stability of the car. Therefore, when fitting new tyres, reference should be made to the latest Service Bulletin.

When new tyres have been fitted, sustained speeds of 112 k.p.h. (70 m.p.h.) or over, during the first 800 km. (500 miles) must not be undertaken. Fast cornering, hard braking and harsh acceleration must also be avoided. This is important as heat generated by a new tyre, until it is sufficiently flexed, makes driving at speed inadvisable.

When fitting new tyres, fit new valves also and balance the wheels.

After fitting new radial-ply tyres, wheel vibrations may be felt during the initial running-in period. This is quite normal, but it is recommended that after the initial running-in period the tyres on all four wheels are again balanced, both statically and dynamically.

Tyre pressures

When checking tyre pressures, ensure that the tyres are cold. A hot tyre must not be deflated in order to obtain the required pressure. As a tyre cools, the pressure decreases.

The recommended tyre inflation pressures (cold) are:

Cars destined for countries other than Australia, Canada, Japan and U.S.A.

Silver Shadow II, Bentley T2 and Silver Wraith II without division
For all loading conditions up to five occupants and 113,5 kg. (250 lb.) of luggage.

For speeds up to 180 k.p.h. (110 m.p.h.)
Front - 1,7 kg/sq.cm. (24 lb/sq.in.)
Rear - 2,0 kg/sq.cm. (28 lb/sq.in.)

For sustained speeds in excess of 180 k.p.h. (110 m.p.h.)
Front - 2,1 kg/sq.cm. (30 lb/sq.in.)
Rear - 2,4 kg/sq.cm. (34 lb/sq.in.)

Silver Wraith II with division
For all loading conditions up to five occupants and 113,5 kg. (250 lb.) of luggage.

For speeds up to 180 k.p.h. (110 m.p.h.)
Front - 1,7 kg/sq.cm. (24 lb/sq.in.)
Rear - 2,1 kg/sq.cm. (30 lb/sq.in.)

For sustained speeds in excess of 180 k.p.h. (110 m.p.h.)
Front - 2,1 kg/sq.cm. (30 lb/sq.in.)
Rear - 2,5 kg/sq.cm. (36 lb/sq.in.)

Corniche and Camargue
For all loading conditions up to four occupants and 113,5 kg. (250 lb.) of luggage.

For speeds up to 180 k.p.h. (110 m.p.h.)
Front - 1,7 kg/sq.cm. (24 lb/sq.in.)
Rear - 2,0 kg/sq.cm. (28 lb/sq.in.)

For sustained speeds in excess of 180 k.p.h. (110 m.p.h.)
Front - 2,1 kg/sq.cm. (30 lb/sq.in.)
Rear - 2,4 kg/sq.cm. (34 lb/sq.in.)

Cars destined for Australia and Japan

Silver Shadow II, Bentley T2 and Silver Wraith II without division
For all loading conditions up to five occupants and 113,5 kg. (250 lb.) of luggage.

For speeds up to 180 k.p.h. (110 m.p.h.)
Front - 1,7 kg/sq.cm. (24 lb/sq.in.)
Rear - 2,0 kg/sq.cm. (28 lb/sq.in.)

For sustained speeds in excess of 180 k.p.h. (110 m.p.h.)
Front - 2,0 kg/sq.cm. (28 lb/sq.in.)
Rear - 2,25 kg/sq.cm. (32 lb/sq.in.)

Silver Wraith II with division
For all loading conditions up to five occupants and 113,5 kg. (250 lb.) of luggage.

For speeds up to 180 k.p.h. (110 m.p.h.)
Front - 1,8 kg/sq.cm. (26 lb/sq.in.)
Rear - 2,25 kg/sq.cm. (32 lb/sq.in.)

For sustained speeds in excess of 180 k.p.h. (110 m.p.h.)
Front - 2,1 kg/sq.cm. (30 lb/sq.in.)
Rear - 2,5 kg/sq.cm. (36 lb/sq.in.)

Printed in England
© Rolls-Royce Motors Limited 1981
October 1981
TSD 4200

Important
Only tyres with a maximum permissible inflation pressure of 2,5 kg/sq.cm. (36 lb/sq.in.) must be used.

Corniche and Camargue
For all loading conditions up to four occupants and 113,5 kg. (250 lb.) of luggage.

For speeds up to 180 k.p.h. (110 m.p.h.)
Front - 1,7 kg/sq.cm. (24 lb/sq.in.)
Rear - 2,0 kg/sq.cm. (28 lb/sq.in.)

For sustained speeds in excess of 180 k.p.h. (110 m.p.h.)
Front - 2,1 kg/sq.cm. (30 lb/sq.in.)
Rear - 2,4 kg/sq.cm. (34 lb/sq.in.)

Cars destined for Canada and the U.S.A.

Silver Shadow II, Bentley T2 and Silver Wraith II without division
For all loading conditions up to five occupants and 113,5 kg. (250 lb.) of luggage.

Front - 1,7 kg/sq.cm. (24 lb/sq.in.).
Rear - 2,0 kg/sq.cm. (28 lb/sq.in.)

Silver Wraith II with division
For all loading conditions up to five occupants and 113,5 kg. (250 lb.) of luggage.

Front - 1,8 kg/sq.cm. (26 lb/sq.in.).
Rear - 2,25 kg/sq.cm. (32 lb/sq.in.).

Important
Only tyres with a maximum permissible inflation pressure of 2,5 kg/sq.cm. (36 lb/sq.in.) must be used.

Corniche and Camargue
For all loading conditions up to four occupants and 113,5 kg. (250 lb.) of luggage.

Front - 1,7 kg/sq.cm. (24 lb/sq.in.).
Rear 2,0 kg/sq.cm. (28 lb/sq.in.).

Camargue
For all loading conditions up to five occupants and 113,5 kg. (250 lb.) of luggage.

Front - 1,7 kg/sq.cm. (24 lb/sq.in.)
Rear - 2,1 kg/sq.cm. (30 lb/sq.in.)

After checking the tyre pressures, ensure that the valve caps are fitted, as they not only protect the valve from the ingress of water, but also provide a valuable secondary air seal. The valve cap should be renewed if its rubber seal shows signs of wear.

Spare tyre inflation
1. Lift the carpet on the luggage compartment floor to expose the rubber plug (see Fig. R7).
2. Remove the plug to gain access to the tyre valve.
3. Adjust the tyre pressure as necessary.

Tyre - To remove
1. When removing a tyre it is recommended that the tyre is removed from the inboard edge of the wheel. Ensuring that the narrow bead seating area is uppermost. A liberal amount of bead lubricant should be applied to the tyre levers and tyre beads when removing the tyre.
2. Use either of the following methods to remove the valve:
a. Lubricate the valve and remove it with the special tool manufactured by Dunlop Limited.
If this tool is not available, a thin pointed screwdriver or similar object may be used by gently forcing it between the shoulder of the valve and the hole in the rim, simultaneously pushing the valve inwards.
b. Cut the valve with a sharp tool ensuring that damage to the tyre does not occur.
3. Discard the valve.

Tyre - To fit
1. Remove any burrs, high spots and scale from the wheel, paying particular attention to the tyre bead seating area.
2. Always fit a new valve when fitting a new tyre; smear the valve with tyre bead lubricant, then press the valve into the hole in the rim, using the special valve fitting tool.
If the fitting tool is not available, the valve can be installed as follows.
Smear the valve with the tyre bead lubricant and from inside the rim fit the valve into the hole. Hold the outer end of the valve and while working it from side to side, apply pressure to the spherical end with a piece of wood or similar blunt object, until the valve seats correctly in the rim.
3. Lubricate the tyre beads, rim flanges, rim bead seats and the area of the bead ledge.
Dunlop tyre bead lubricant TBL1 or TBL2 is recommended for use when fitting valves and tyres. **It is most important that soap or other similar agents are not used.**
4. Fit the tyre to the wheel ensuring that the lowest point of the tyre, marked with a red or green spot (approximately 9mm. (⅜in.) diameter) is aligned with the highest point of the wheel. This point is stamped with the letter 'H' on the inner rim (see Fig. R10).
Certain cars destined for the U.S.A. and Canada will only have a white spot marking, in these cases the white spot must be positioned diametrically opposite the letter 'H' marking on the wheel.
It should be noted that any additional colour spot markings should be ignored as they are merely used by tyre manufacturers for inspection purposes.

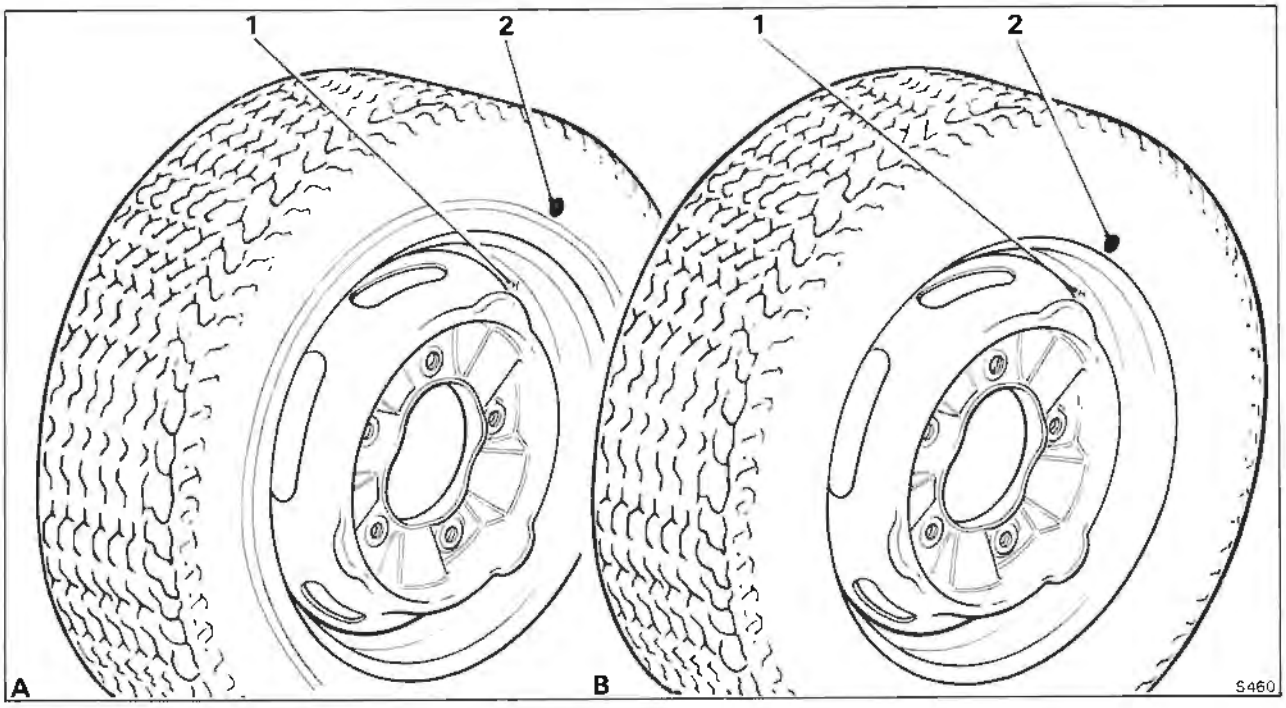

Fig. R10 Wheel and tyre markings

A Whiteline tyre
B Blackwall tyre
1 'H' marking
2 Red spot marking

Note
It is important to adhere to the instructions given above in Operation 4 as manufacturing tolerances on wheels and tyres if accumulated, will create sufficient radial 'run-out' to cause undesirable vibrations and impair the ride characteristics of the car. Distributors, Retailers and Dealers should pass on these instructions to Tyre Fitting Agents, who may be employed to fit tyres.

Tyre service
Periodically the balance of each wheel should be checked and corrected if necessary. **The wheels should not be interchanged to give an even tyre wear.**

If a tubeless radial-ply tyre is penetrated by a nail or other sharp object, but remains inflated, it may be possible to complete a journey without effecting a repair providing the object remains in the tyre and the car is driven slowly.

When a repair is necessary, it can be carried out with the aid of the Dunlop 'Reddiplug' repair kit, but only if the puncture is in the tread and not in the side wall of the tyre. **It must be emphasised that this is only a temporary repair and permanent repair must be carried out at the earliest opportunity.**

Never use more than one plug to a hole.

To carry out a repair using the 'Reddiplug' repair kit reference should be made to the latest Dunlop 'Reddiplug' repair leaflet.

To carry out a permanent repair in the tread of a radial-ply tyre remove the tyre from the wheel and repair the inside of the casing using the mushroom headed plug available for this purpose.

If the side walls of the tyre are damaged, the tyre must be returned to a tyre specialist for a thorough examination as damage to the fabric of a radial-ply tyre renders the tyre unsafe for further use.

Tyre wear characteristics

Front tyres
The front tyres tend to wear on the shoulders leaving approximately three or four ribs of the tread pattern showing more prominently in the centre of the tyre. This condition may be evident from a fairly early mileage, finally resulting in an amount of tread remaining on the centre ribs while the tyre rubber on the shoulders is worn smooth. The tyre tread assumes a rather rounded outline as shown in Figure R11.

Rear tyres
The rear tyres tend to wear in a tapered form from the outer shoulder across to the inner shoulder; the centre and inside shoulder showing most wear. An example of a partially worn rear tyre is shown in Figure R11.

Printed in England
© Rolls-Royce Motors Limited 1977
July 1977
T.S.D. 4200

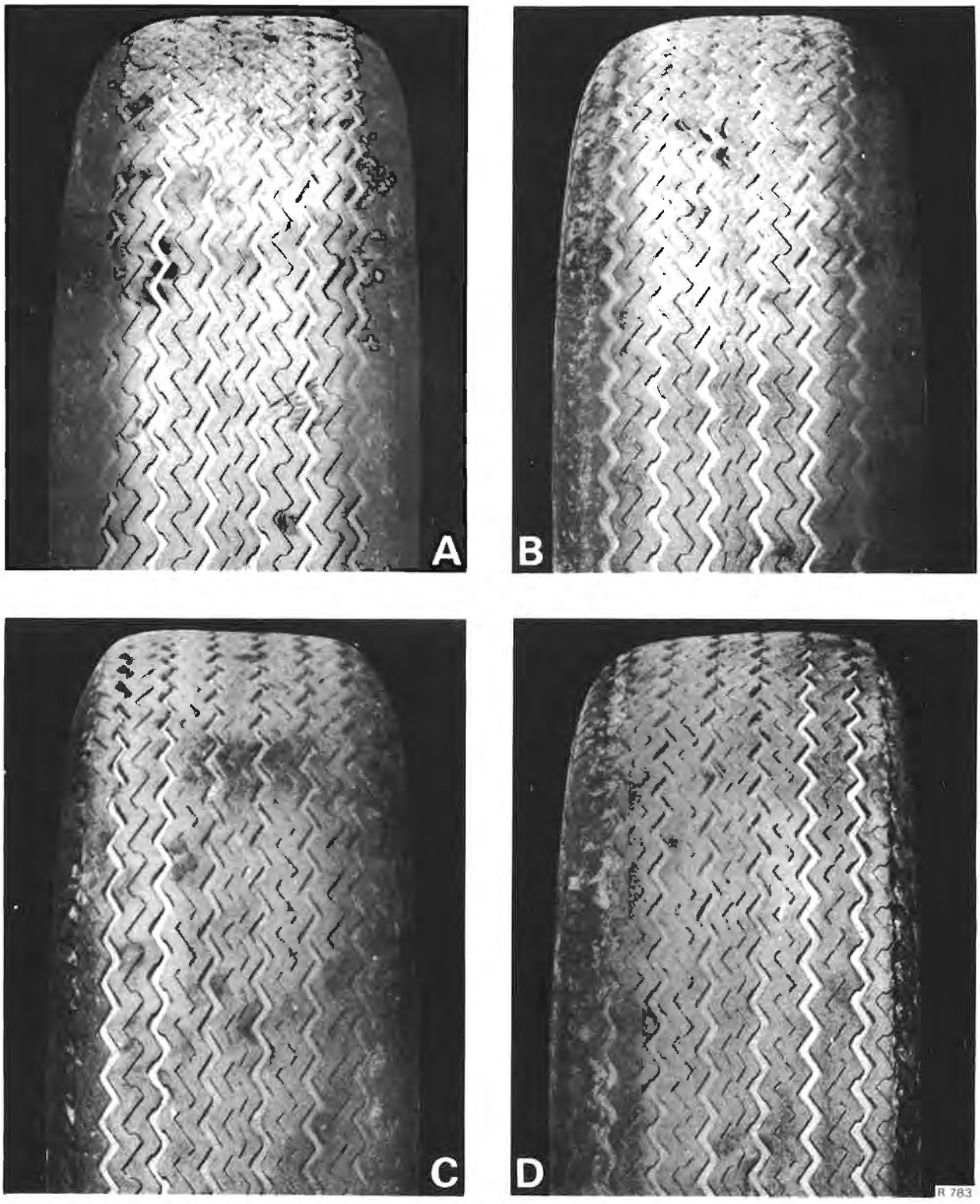

Fig. R11 Tyre wear

A Left-hand front - Inner edge

B Right-hand front - Inner edge

C Left-hand rear - Inner edge

D Right-hand rear - Inner edge

Note Letters shown adjacent to inner edges of tyres

When assessing tyre wear the following points should also be considered.

1. The wear rate on the outer shoulders of the front and rear tyres which run on the kerb side of the road will be slightly greater than the other outer shoulders, particularly if the car is driven on roads with a pronounced camber.

2. Tyre wear is critical to tyre inflation pressures, particularly with respect to under-inflation. Therefore, it is imperative that the recommended tyre pressures are maintained.

3. The higher the speed at which a car is driven through corners, the more the rear tyres will wear on the inner shoulders. The effects of hard cornering will be shown also by 'feathering' which occurs on the rib edges. Do not change the position of a partially worn set of tyres as the subsequent rate of wear will be increased.

Tread wear indicators

To provide a visual indication that the depth of tread remaining on a tyre is 1,6 mm. (1/16in.) or less, tread wear indicators are incorporated into the construction of the tyres.

These indicators are integrally moulded ribs located in the tread grooves. The ribs are spaced at frequent intervals around the circumference of the tyre and at each point they extend across the full width of the tyre tread in all primary grooves.

When a tyre has worn so that one or more of the indicators are flush with the tread (1,6 mm. (1/16in.) or less, tread depth) a new tyre is required.

Legal requirements

All Distributors, Retailers and Dealers are advised to familiarise themselves with the legal requirements covering tyres and tyre wear, for the country in which they operate. An example of a requirement which applies in the United Kingdom is as follows:

Tread depth must not be less than 1 mm. (0.039 in.), in a continuous area extending to a minimum of 75% of the tread width and this area must extend around the complete circumference of the tyre.

Remould tyres

In cases where new tyres fail to meet the overall quality standards laid down by the manufacturers, but remain structurally sound and are suitable for sale as a remoulded tyre, the sidewalls will bear one of the following markings, 'Regraded Quality', 'Remould Quality' or 'Seconds'. In addition the speed rating of the tyre (e.g. the H in HR15) will be obliterated.

Under no circumstances should any tyres be fitted which have been branded 'Regraded Quality', 'Remould Quality' or 'Seconds', or those which have had the speed rating removed or altered.

Winter tyres

Dunlop Weathermaster tyres

Dunlop Weathermaster SP 44 radial-ply 205 x 15 tyres are approved and should be fitted to either the rear wheels (with HR70 HR15 (235/70 HR15) tyres on the front) or to all four wheels.

The maximum permissible speed limitation for these tyres is 137 k.p.h. (85 m.p.h.) with an inflation pressure of 2,0 kg/sq.cm. (28 lb/sq.in.). By increasing the inflation pressure to 2,25 kg/sq.cm. (32 lb/sq.in.) the safe maximum permissible speed may be increased to 153 k.p.h. (95 m.p.h.).

Studs

The approved tyres are supplied with 116 moulded holes for the acceptance of studs. If studs are to be fitted all holes should be utilised.

It is recommended that, Secomet P2-140 studs are used and when fitting studs to a tyre ensure that they protrude between 1,5 mm. and 2,0 mm. (0.06 in. and 0.79 in.).

Whenever possible a tyre should be studded from new, however it is acceptable to stud a partially worn tyre provided the studs do not protrude beyond 4,0 mm. (0.157 in.) when fitted. If this limit is exceeded the tyre must be considered too worn to be successfully studded.

Snow chains

Three types of snow chains are recommended. They are Kantenspur 07-745, Union S2-3081 and Union S2-3082.

When fitting snow chains the following points should be observed.

1. It is recommended that when fitting snow chains, the plastic gloves provided with the kit should be worn.

The spare links supplied with the kit are only intended to permit emergency road side repairs to be carried out if a chain is damaged.

2. On all types of snow chains it is important to note that if the chains are fitted too tightly and the car is driven at fast speeds, or for long distances, on roads which are free from snow, irrepairable damage to the tyres and the chains will occur.

3. When snow chains are fitted, a speed limit of 50 k.p.h. (31 m.p.h.) must not be exceeded on snow free roads.

4. With the exception of Camargue cars, the Kantenspur 07-745 snow chains can only be used on front wheels when HR70 HR15 (235/70 HR15) tyres are fitted.

On Camargue cars these snow chains can be fitted to all four wheels.

5. Union S2-3082 snow chains are recommended as an alternative to the Kantenspur.

6. Union S2-3081 snow chains are recommended for use on Dunlop Weathermaster 205-15 SP44 radial-ply tyres.

These snow chains can be used on all four wheels or to the rear wheels only when HR70 HR15 (235/70 HR15) tyres are fitted to the front wheels.

Printed in England
© Rolls-Royce Motors Limited 1977
July 1977
T.S.D. 4200

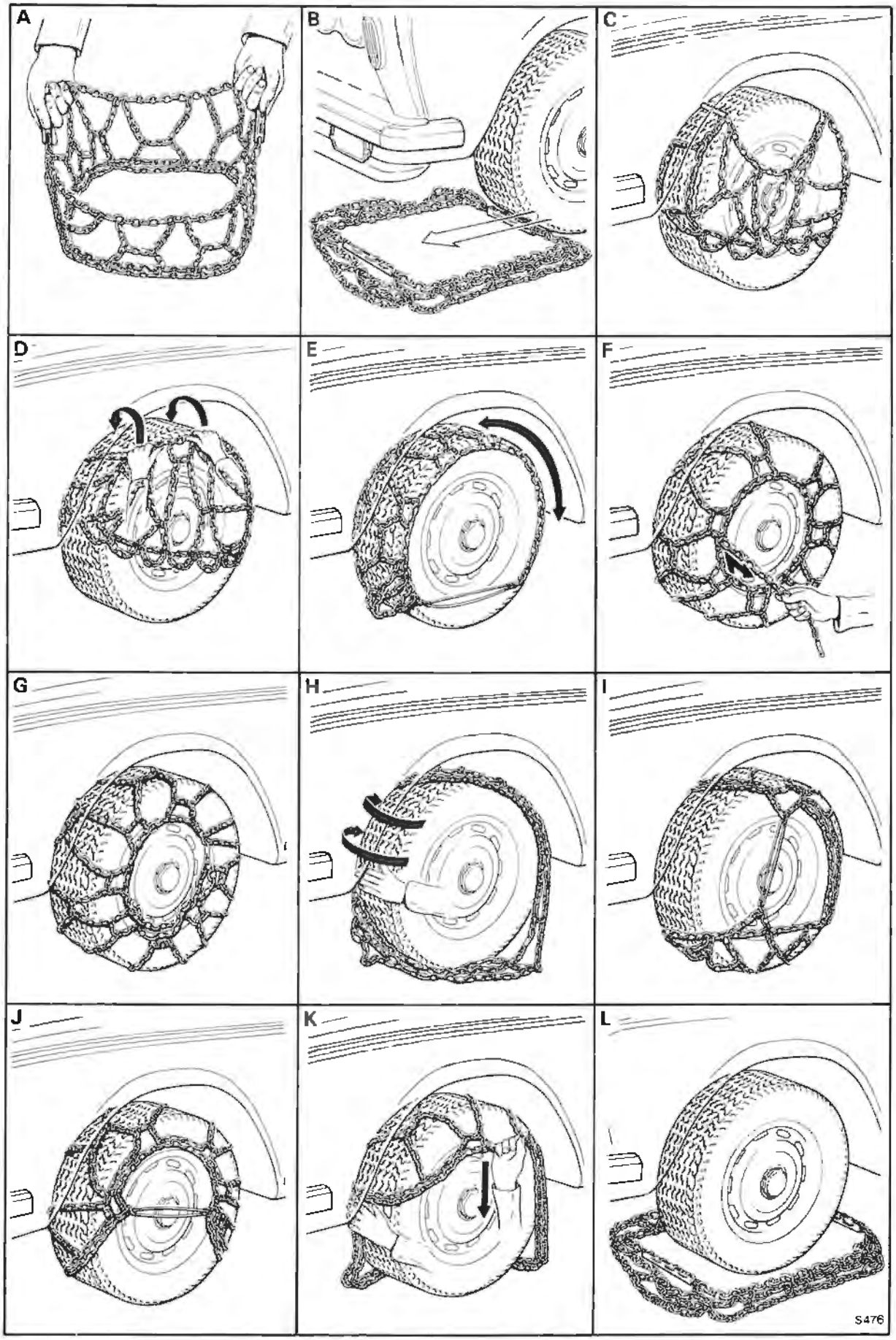

Fig. R12 Fitting and removing Kantenspur snow chains

Tyre pressures – With or without snow chains
The recommended tyre inflation pressures (cold) are:

Silver Shadow II, Silver Wraith II without division, Bentley T2, Corniche and Camargue
a. 205-15 Weathermaster tyres
Front and rear 2,0 kg/sq.cm. (28 lb/sq.in.)
b. HR70 HR15 (235/70 HR15) tyres
Front 1,7 kg/sq.cm. (24 lb/sq.in.)
205-15 Weathermaster tyres
Rear 2,25 kg/sq.cm. (32 lb/sq.in.)
c. When HR70 HR15 (235/70 HR15) tyres are fitted to both front and rear wheels refer to the figures quoted under the heading Tyre pressures on Page R2-1.

Silver Wraith II with division
a. 205-15 Weathermaster tyres
Front and rear 2,0 kg/sq.cm. (28 lb/sq.in.).
b. HR70 HR15 (235/70 HR15) tyres
Front 1,8 kg/sq.cm. (26 lb/sq.in.).
205-15 Weathermaster tyres
Rear 2,5 kg/sq.cm. (36 lb/sq.in.).
c. When HR70 HR15 (235/70 HR15) tyres are fitted to both front and rear wheels refer to the figures quoted under the heading Tyre pressures on Page R2-1.

Kantenspur snow chains – To fit
1. Ensure that the car is standing on a level surface.
2. Apply the parking brake.
3. Holding the chain apart by the red plastic handles, ensure that it hangs as shown in Figure R12 inset A.
4. Position the chain in an oval shape immediately before or behind the front wheel and move the car until the tyre is situated centrally inside the chain (see Fig. R12 inset B).
5. Holding the red handles lift the chain over the tread of the tyre (see Fig. R12 inset C).
6. Lift the upper chain and place it completely over the full width of the tyre (see Fig. R12 inset D).
7. Fit the rubber tensioner (supplied with the kit) horizontally near the bottom of the tyre and move the wheel one quarter of a revolution in either a forward or rearward direction (see Fig. R12 inset E).
8. Remove the rubber tensioner, disengage the fastener and pull the chain as indicated by the arrow to produce tension (see Fig. R12 inset F).
9. To take up the remaining chain, thread it through the outer circumference as shown in Figure R12 inset G and hook in the fastener.
10. Check to ensure that the fastener is hooked securely in the side of the chain and that a clearance of approximately 12,7 mm. (0.5 in.) exists between the chain and the tyre. This clearance is necessary as snow chains should not be fitted too tightly.
11. Repeat Operations 1 to 10 inclusive on the other front wheel.

Kantenspur snow chains – To remove
1. Unhook the fastener, unthread it and allow it to hang at the bottom of the wheel (see Fig. R12 inset H).
2. Move the chain towards the inner side of the wheel until part of the tread is visible (see Fig. R12 inset H).
3. Attach the rubber tensioner vertically over the wheel centre (see Fig. R12 inset I).
4. Repeat Operations 1, 2 and 3 on the other wheel.
5. Move the wheels one quarter of a revolution until the free part of the tread is on the ground (see Fig. R12 inset J) then remove the tensioners.
6. Hold the chain on the upper part of the wheel, then pull it outwards and downwards until the chain is situated around the base of the wheel (see Fig. R12 insets K and L). Repeat this operation on the other front wheel.
7. Drive the car out of the chains.

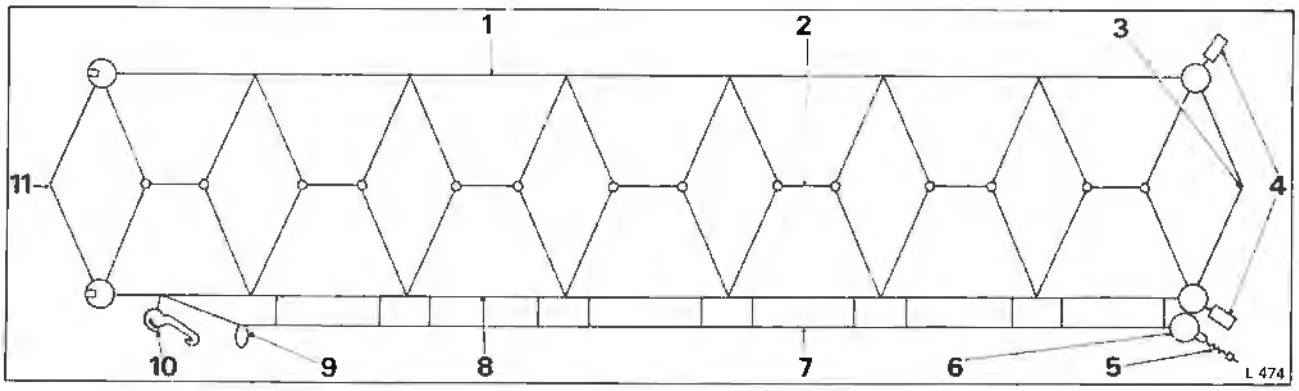

Fig. R13 Union S2 snow chain
1 Inner chain
2 Anti-skid section
3 End link
4 Extension links
5 Spring hook
6 End fitting
7 Tension chain
8 Outer chain
9 Safety link
10 Tensioning key
11 Hook link

Printed in England
© Rolls-Royce Motors Limited 1977

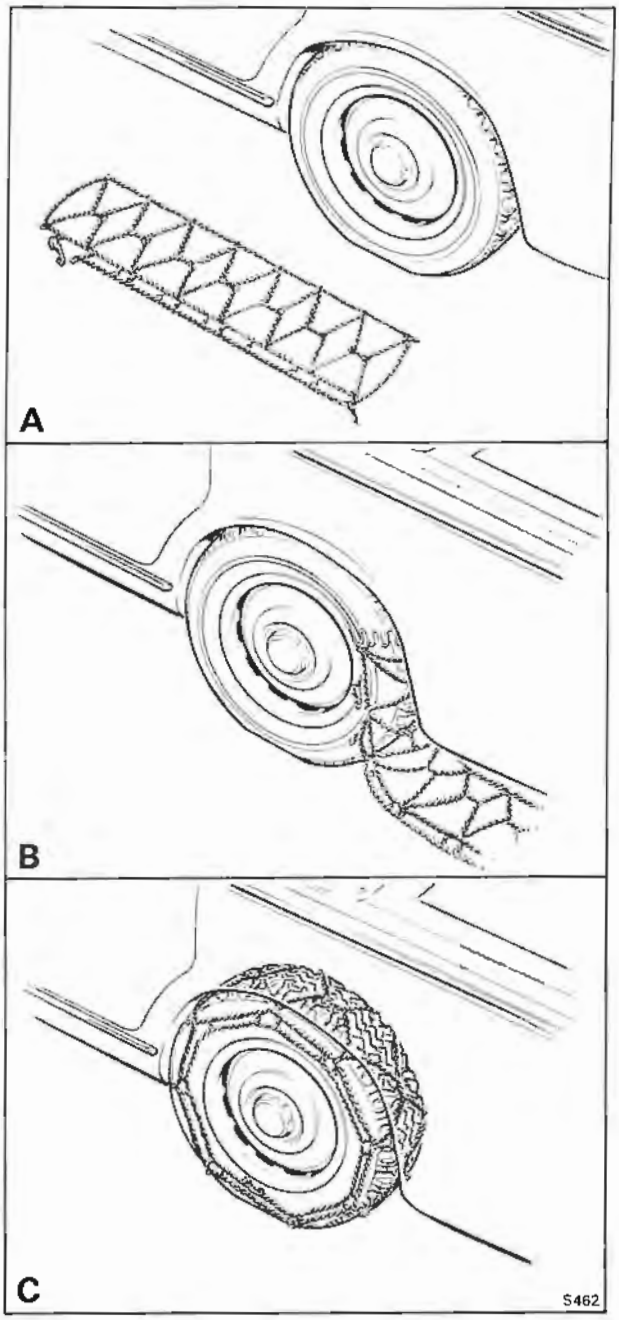

Fig. R14 Fitting Union S2 3081 snow chain
- **A** Snow chain in position prior to fitting
- **B** Fitting snow chain with the aid of the fitting clip - Wheels not raised
- **C** Snow chain correctly fitted

Union S2 snow chains (see Fig. R13)
Union S2 chains can be fitted using either of the following methods.
a. Not raising the wheels and using a fitting clip.
b. Raising the wheels clear of the ground.

Wheels not raised
1. Ensure that the car is standing on a level surface.
2. Apply the parking brake.
3. Position the chain adjacent to the wheel ensuring that the tension chain and tensioning key are positioned away from the car (see Fig. R14 inset A).
4. Hook the end or hook links onto the fitting clip and fasten the clip to the tyre (see Fig. R14 inset B)
5. Move the car forward one revolution of the wheels so that the clip can be removed.
6. Remove the clip and evenly distribute the free anti-skid sections around the tyre.
7. Check that the hooks and links are not twisted.
8. Connect the inner and outer chains by means of the hook link and the end or extension links. The inside chain should be connected first.
9. Tighten the tension chain and lock the tensioning key.
10. Check to ensure that the tensioning key is correctly tightened; snow chains must not be fitted too tightly to the tyres. When correctly fitted it should be possible to slide a hand between the chain and tyre (see Fig. R14 inset C).

Wheels raised
Rear wheels
1. Ensure that the car is standing on a level surface.
2. Apply the parking brake.
3. Check the front wheels to prevent the car from rolling.
4. Position a jack in the centre of the final drive casing on the rear suspension crossmember. Place a piece of soft wood between the jack head and the casing. Raise the car until the rear wheels are clear of the ground.

The car jack can be used for this operation by opening the cover plate in the body sill, positioning the jack correctly and raising the side of the car. This method will allow only one rear wheel to be raised at a time.

5. Position the chain adjacent to the rear wheel ensuring that the tension chain and tensioning key are positioned away from the car (see Fig. R14 inset A). The chain should lie flat and not twisted.
6. Lift the chain by the inner side (i.e. the one nearest the wheel) and place it onto the tyre. Spread the anti-skid sections evenly over the tyre.
7. Ensure that the hooks and links are not twisted
8. Connect the inner and outer chains by means of the hook link and the end or extension links. The inside chain should be connected first.
9. Tighten the tension chain and lock the tensioning key.
10. Repeat Operations 5 to 9 inclusive on the other rear wheel.
11. Lower and remove the jack.
12. Remove the chocks from the front wheels.

Front wheels
1. Repeat Operations 1 and 2 as described for the rear wheels.

2. Chock the rear wheels.
3. Position a jack under the front pivot mounting for the lower triangle levers on the sub-frame and follow the same procedure as in Operetion 4 of the rear wheels.
4. Repeat Operations 5 to 9 inclusive as described for the rear wheels.
5. Repeat these operations on the other wheel.
6. Lower and remove the jack.
7. Remove the chocks from the rear wheels.

Cleaning snow chains
To protect the chains against rust, wash in hot water and dry them as soon as possible after use.

Printed in England
© Rolls-Royce Motors Limited 1977
July 1977
T.S.D. 4200

Workshop Manual

Rolls-Royce Silver Shadow II
Rolls-Royce Silver Wraith II
Rolls-Royce Corniche
Rolls-Royce Camargue
Bentley T2
Bentley Corniche

From car serial number 30001

Volume 3

© Rolls-Royce Motors Limited 1977

Printed in England

T.S.D. 4200 S 168 February 1977

Printed and Published by

Rolls-Royce Motors Limited
Crewe CW1 3PL
Cheshire
England

The information given in this document is based upon the latest knowledge available to Rolls-Royce Motors Limited. However, in view of the Company's continuous programme of product improvement and development, the information may have become out of date by the time you read this publication and reference should be made to the Company's service bulletins.

© Rolls-Royce Motors Limited 1977

Chapter S

Body

Section

Special precautions
S1 Doors
S2 Bonnet
S3 Luggage compartment lid
S4 Paint
S5 Bumpers
S6 Everflex roof trim
S7 Exterior trim
S8 Windscreen and Rear window
S9 Power operated hood system (Convertible cars)
S10 Seats
S11 Seat belts
S12 Interior trim
S13 Centre division (Silver Wraith II cars)
S14 Accident repairs
S15 Workshop tools

Printed in England
© Rolls-Royce Motors Limited 1980

January 1980
T.S.D. 4200

Chapter S

Issue record sheet 1

March 1981

The dates quoted below refer to the issue date of individual pages within this chapter.

Section	Special Prec.	S1	S2	S3	S4	S5	S6	S7	S8
Page No.									
1	Jan 80	Aug 78	Aug 78	Nov 78	Sep 79	May 79	Jan 80	Jan 80	Mar 81
2	Jan 80	Aug 78	Aug 78	Nov 78	Sep 79	May 79	Jan 80	Jan 80	Mar 81
3		Aug 78	Aug 78	Nov 78	Sep 79	May 79	Jan 80	Jan 80	Mar 81
4		Aug 78		Nov 78	Sep 79	May 79	Jan 80	Jan 80	Mar 81
5		Aug 78		Nov 78	Sep 79	May 79	Jan 80	Jan 80	Mar 81
6		Aug 78		Nov 78	Sep 79	May 79	Jan 80	Jan 80	Mar 81
7		Aug 78		Nov 78	Sep 79	May 79	Jan 80	Jan 80	Mar 81
8		Aug 78		Nov 78	Sep 79	May 79	Jan 80	Jan 80	Mar 81
9		Aug 78		Nov 78	Sep 79	May 79	Jan 80	Jan 80	Mar 81
10		Aug 78		Nov 78	Sep 79	May 79		Jan 80	Mar 81
11		Aug 78		Nov 78	Sep 79	May 79		Jan 80	Mar 81
12		Aug 78		Nov 78	Sep 79	May 79		Jan 80	Mar 81
13		Aug 78			Oct 79	May 79			Mar 81
14		Aug 78			Oct 79	May 79			Mar 81
15		Aug 78			Oct 79	May 79			Mar 81
16		Aug 78			Oct 79	May 79			Mar 81
17		Aug 78			Sep 79				Mar 81
18		Aug 78			Sep 79				Mar 81
19		Aug 78			Sep 79				Mar 81
20		Aug 78			Sep 79				Mar 81
21		Aug 78			Sep 79				
22		Aug 78			Sep 79				
23		Aug 78			Sep 79				
24		Aug 78			Sep 79				
25		Aug 78			Sep 79				
26		Aug 78							
27		Aug 78							
28		Aug 78							
29		Aug 78							
30		Aug 78							
31									
32									
33									
34									
35									
36									
37									
38									
39									
40									
41									
42									
43									
44									
45									
46									
47									
48									

Printed in England
© Rolls-Royce Motors Limited 1981

Special precautions

Printed in England

© Rolls-Royce Motors Limited 1980

Introduction

Chapter S contains references to various types of cleaners, primers, adhesives, paints, etc. When these materials are used correctly, they are perfectly safe and **do not** constitute a health hazard. However, the following precautionary measures should be taken to eliminate the possible dangers associated with their use.

Cleaners, Primers and Adhesives

Genklene
Bostik Cleaner 6001
Bostik Primer 9252
Bostik Adhesive 1261
Boscoprene Adhesive 2402 (Parts 1 and 2)
Dunlop Adhesive S1240
Dunlop Adhesive L107
Dunlop Adhesive S1558 (replaces Dunlop Adhesive 1127)

With the exception of Genklene, the cleaners, primer and adhesives are all classified as **highly inflammable.** When using any of the cleaners, primer and adhesives listed above the following precautions must be taken.

1. Always replace the lids on any material containers when not in use.
2. Always store all inflammable materials in lockable metal cupboards.
3. The cleaners and adhesives must not be used in a confined or badly ventilated area.
4. The use of a suitable barrier cream and/or the use of protective gloves is recommended.
5. Use a suitable antiseptic cleaner to remove any adhesive from the skin. **Do not use cleaning solvents.**

Boscoprene Adhesive 2402 (Parts 1 and 2)

1. When using Boscoprene Adhesive 2402 Parts 1 and 2 ensure that the uncured adhesive is not contaminated with water.
2. Part 2 of Boscoprene Adhesive 2402 contains the chemical isocyanate. When using this adhesive, the following precautionary and preventive measures listed in Operations 3 to 10 inclusive should be adopted.
3. Always ensure that good washing facilities are available.
4. Always wash hands thoroughly then apply a suitable barrier cream before commencing work. Rubber gloves may also be worn but care must be taken to ensure that they are clean.
5. Ensure that a suitable antiseptic cleansing cream is available for removing spilt isocyanate, etc., from the skin. **Do not use cleaning solvents.**

If contact with the skin has occured, clean the affected area with cleansing cream immediately, then wash thoroughly with soap and water. If prolonged contact has occured, treat the affected area with diluted ammonia in the following proportions

Water	90)	
Liquid Detergent	2)	Parts by volume
Concentrated Ammonia SG 0.880	8)	

then rinse thoroughly with water.

6. If the isocyanate is accidently splashed into the eye, **immediately** wash the eye thoroughly with water, apply a drop of olive oil then, **seek medical aid.**
7. If the isocyanate is spilt onto clothing, treat with liquid decontaminant i.e. diluted ammonia (see Operation 5).
8. Any spilt isocyanate should be **immediately** wiped away and the affected area treated with liquid decontaminant.
9. To dispose of any small quantities of waste isocyanate, slowly add them to at least twenty times their volume of liquid decontaminant in an open container stirring slowly. Allow the mixture to stand for two hours after which it can be safely washed down the drain with large quantities of water.
10. If any Boscoprene Adhesive 2402, Part 2 (isocyanate) is in the vicinity of a fire the following precautions must be taken.

a. If possible, move the containers to a safe area.
b. If it is not possible to move the containers, the possibility of injurious vapour must be anticipated and the area evacuated immediately.
c. Breathing apparatus resistant to isocyanate fumes must be used by anyone remaining in the affected area.
d. **All fire brigade personnel must be informed of the chemical hazard.**
e. Small fires are best extinguished with dry chemical or carbon dioxide extinguishers. **Do not use water extinguishers,** as further heat is generated by the reaction of water with the isocyanate chemical (Part 2 of Boscoprene Adhesive 2402).

Paints, Solvents, Thinners, etc.

The following precautions should be taken to reduce fire risks from solvent fumes, static electricity and spontaneous combustion where paints, solvents and thinners are used or stored.

Solvent fumes

1. Display **'No Smoking'** and **'No Naked Flames'** signs and ensure that blow lamps and welding equipment are not used in the vicinity of the painting area.
2. Solvents and fumes can spread out over large areas and ignite, therefore, **wipe up spilled thinners immediately and dispose of the cloth.**
3. Always provide a good ventilation system to remove fumes.

Special precautions 2

4. Replace all caps and covers on containers.
5. All solvent containers and electrical equipment should be properly earthed. **Do not use temporary electrical installations.**

Static electricity

1. When pouring thinners and solvents, connect the containers with electrically conductive wire and earth them.
2. If possible, earth all equipment in the paint shop.
3. Do not splash the thinners when pouring. **Always pour the thinners down the side of the container.** Thinners that is allowed to free fall through the air can generate static electricity.
4. Do not use plastic containers for storage.

Spontaneous combustion

1. Some materials such as oils and certain paints, which have been wiped up with cloth and cotton waste, oxidise so rapidly that sufficient heat is generated to cause ignition. Therefore, immediately after wiping up any spillage, remove the cloth/cotton waste from the paint shop area.

Basic rules in the paint shop

Three basic rules apply to safety in the paint shop, they are.

1. **Keep the paint areas clean and tidy.**
2. **Ensure proper ventilation.**
3. **Look after all equipment, especially the electrical equipment.**

Section S1

Doors
Contents

	Page
Front doors	S1 - 3
Removing and fitting the door	S1 - 3
Trim	S1 - 5
Hinges	S1 - 8
Interior handles (Camargue)	S1 - 8
Window lift mechanism	S1 - 9
Window counter balance mechanism (Camargue)	S1 - 11
Window glass	S1 - 11
Window frame	S1 - 13
Fixed quarter window glass	S1 - 15
Door lock and linkage	S1 - 15
Checking the door lock mechanism	S1 - 16
Centralised door locking solenoid and linkage	S1 - 18
Exterior door handle and Actuator lever assembly	S1 - 19
Private lock	S1 - 20
Door seals	S1 - 21
Exterior door mirror	S1 - 25
Rear doors	S1 - 27
Removing and fitting the door	S1 - 27
Hinges	S1 - 27
Trim	S1 - 28
Window lift mechanism	S1 - 28
Window glass	S1 - 28
Door lock and linkage	S1 - 28
Checking the door lock mechanism	S1 - 28
Centralised door locking solenoid and linkage	S1 - 30
Exterior door handle and Actuator lever assembly	S1 - 30
Door seals	S1 - 30

Printed in England

© Rolls-Royce Motors Limited 1978

August 1978

T.S.D. 4200

Printed in England
© Rolls-Royce Motors Limited 1978
August 1978
T.S.D. 4200

Section S1

Doors

Introduction

The doors of all cars are constructed from aluminium magnesium alloy.

Front doors

Door - To remove

Silver Shadow II, Bentley T2 and Silver Wraith II

1. Disconnect the battery.
2. Fold back the floor carpet and remove the carpet stud securing the side scuttle trim pad to the floor. Ease the pad away from the scuttle wall and remove the securing pins.
3. Disconnect the door loom plug(s) and socket(s).
4. Support the door, then remove the four setscrews securing each door hinge to the body. An Allen key and extension bar are required to remove the forward socket headed bolt from the upper hinge.
5. Remove the door complete with its hinges, carefully withdrawing the door loom(s) through the aperture in the door pillar.

Corniche

1. Disconnect the battery.
2. Remove the two screws securing the side scuttle trim pad to the scuttle wall. Ease the pad away from the scuttle wall and withdraw.
3. Repeat Operations 3, 4 and 5 from Door - To remove, Silver Shadow II, Bentley T2 and Silver Wraith II.

Camargue

1. Disconnect the battery.
2. Remove the four screws securing the side scuttle trim pad to the scuttle wall. Ease the pad away from the scuttle wall and withdraw.
3. Disconnect the door loom plug(s) and socket(s) (see Fig. S1).
4. Using a small screwdriver or metal rod of approximately 1,60 mm. (0.062 in.) diameter disengage the spring clip securing each cable connector then, withdraw the cable and connector (see Fig. S2).

Note the position of each cable as it is removed to ensure correct location during assembly. If in doubt refer to Chapter M.

5. Remove the four Pozidriv screws securing the door loom guide channel to the door hinge pillar.
6. Support the door, then remove the four setscrews securing each door hinge to the car body. An Allen key and extension bar are required to remove the socket headed setscrews securing the lower hinge; these are located through an aperture in the side scuttle wall.
7. Remove the door complete with its hinges, carefully withdrawing the door loom(s) through the aperture in the door pillar

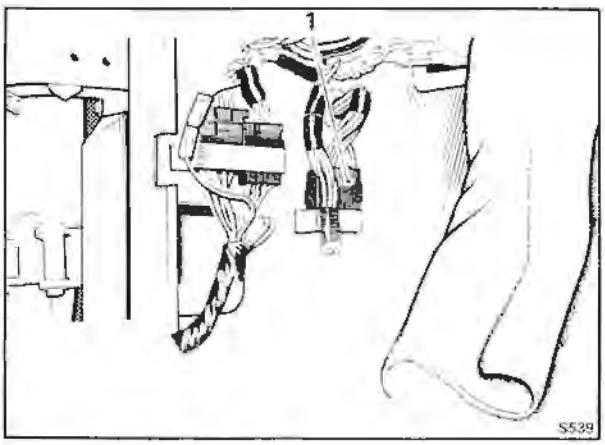

Fig. S1 Position of door loom plug and socket (Camargue)
1 Door loom plug and socket

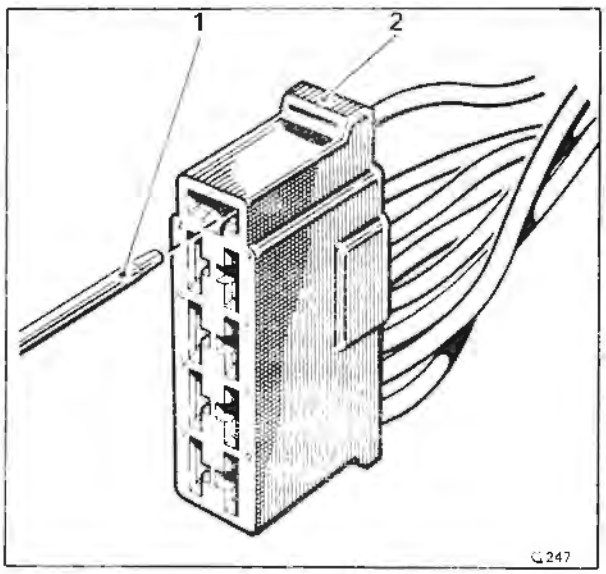

Fig. S2 Positioning the cable release tool into a loom plug (Camargue)
1 Cable connector release tool
2 Loom connector plug

Door - To fit

All cars

To fit the door reverse the procedure given for removal noting the following points.

1. The position of the door(s) in the body aperture(s) should be set as shown in either Figure S3, S4 or S5.

To obtain this position, the door should be moved on its hinges whilst the hinge securing screws are slightly more than finger tight.

When the door is correctly positioned, torque tighten the hinge securing screws (see Chapter P).

Note

If the door is only partly assembled when carrying out this operation, the remaining parts of the door assembly should be weighed and the corresponding weight added to the bottom of the door. This allows for the possibility of the door dropping slightly when parts are added after the door has been set.

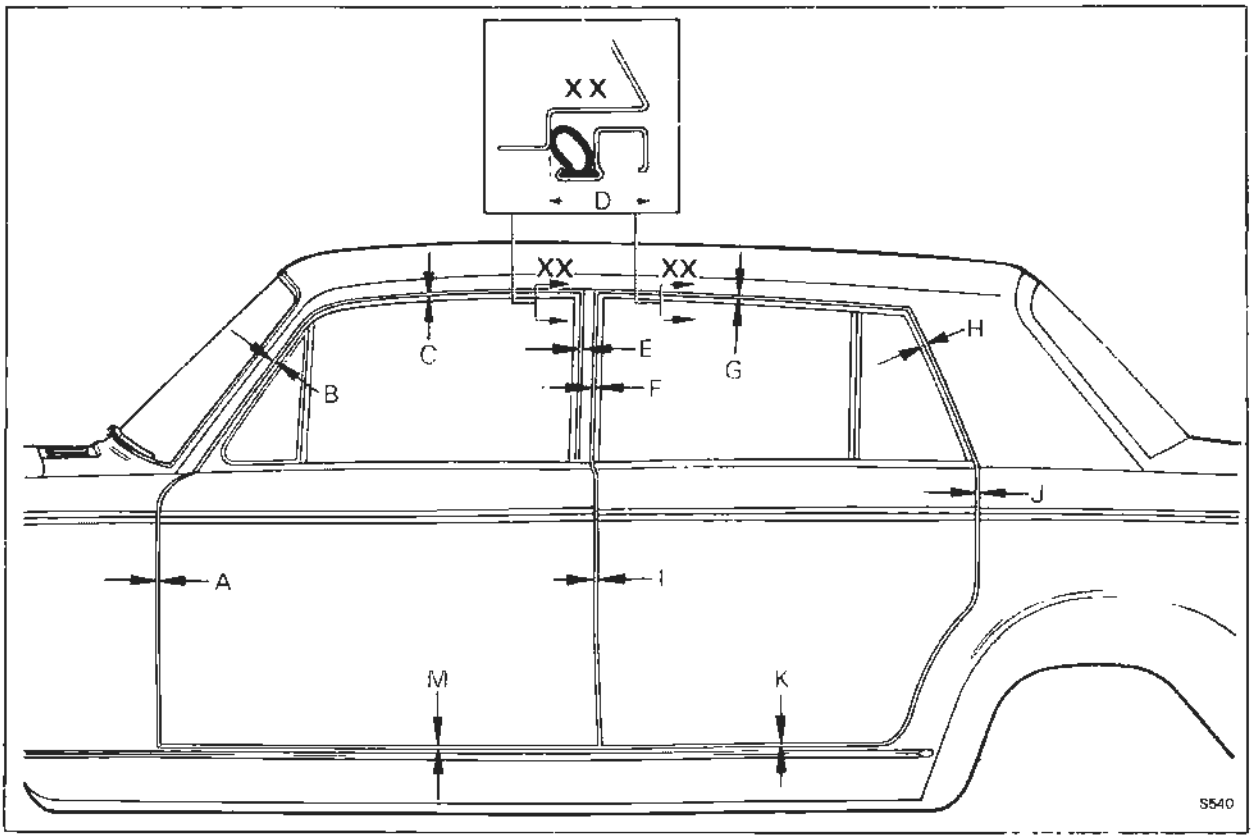

Fig. S3 Position of doors in body aperture

- A 4,76 mm. to 2,38 mm. (0.187 in. to 0.093 in.)
- B 4,76 mm. to 1,59 mm. (0.187 in. to 0.062 in.)
- C 6,35 mm. to 4,76 mm. (0.250 in. to 0.187 in.)
- D 30,16 mm. to 26,99 mm. (1.187 in. to 1.093 in.) - measured 7,62 cm (3.0 in.) from each end of the frame
- *E 6,35 mm. to 5,56 mm. (0.250 in. to 0.218 in.)
- F 6,35 mm. to 4,76 mm. (0.250 in. to 0.187 in.)
- G 6,35 mm. to 4,76 mm. (0.250 in. to 0.187 in.)
- *H 6,35 mm. to 5,56 mm. (0.250 in. to 0.218 in.)
- J 3,18 mm. to 1,59 mm. (0.125 in. to 0.062 in.)
- K 6,35 mm. to 3,18 mm. (0.250 in. to 0.125 in.)
- I 5,56 mm. to 3,97 mm. (0.218 in. to 0.156 in.) - between front and rear door.
- M 6,35 mm. to 3,18 mm. (0.250 in. to 0.125 in.)

Note

All gaps to be parallel to within 0,79 mm. (0.031 in.). The doors must be flush with the body to within 0,79 mm. (0.031 in.) in or out.

*The clearances given at these points are critical in order to avoid seal fouls. When setting these clearances, prior to fitting the door seal, set to the first dimension given as these clearances tend to reduce slightly after the seal and door trim are fitted.

The inset shows the dimension from the seal face on the body to the outer face of the window frame.

Printed in England
© Rolls-Royce Motors Limited 1978
August 1978
T.S.D. 4200

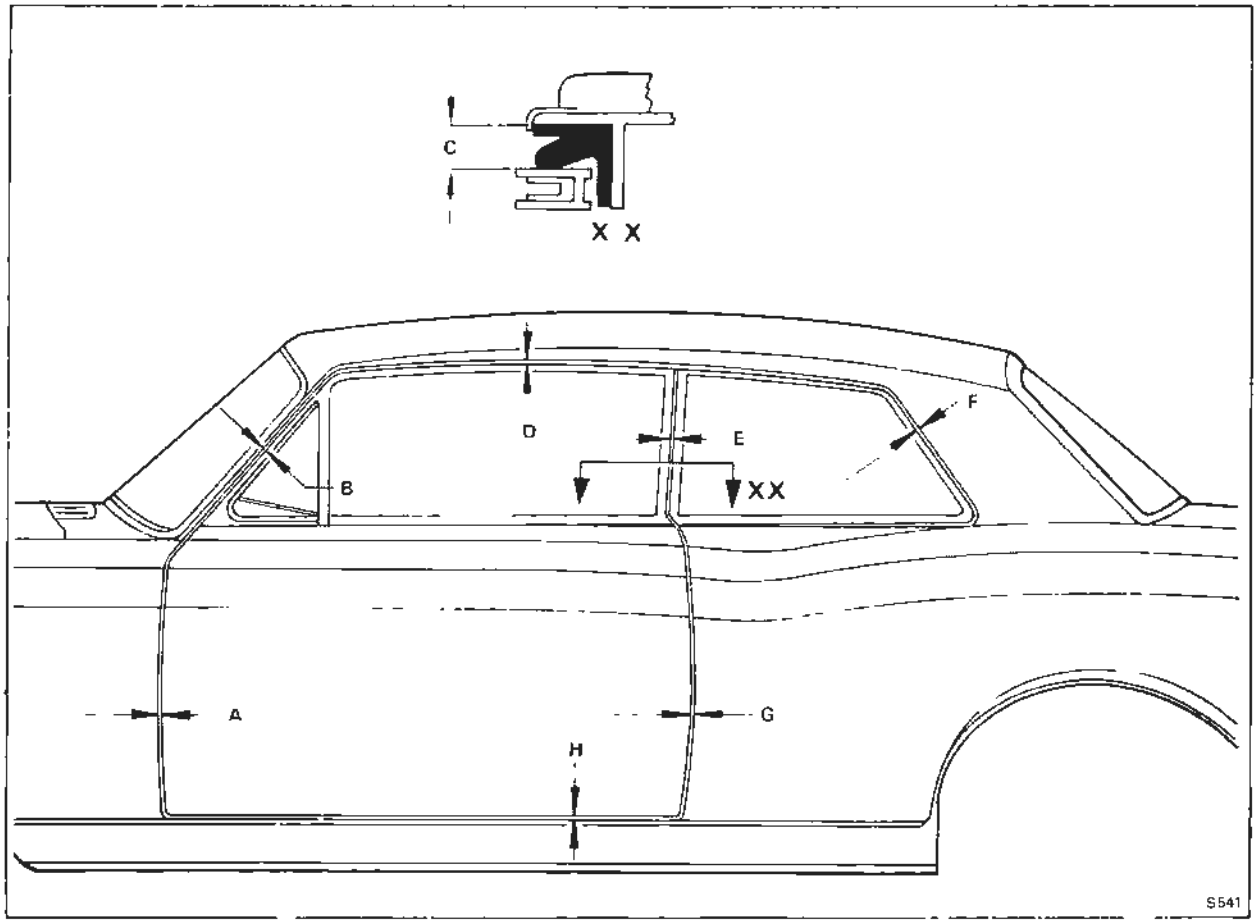

Fig. S4 Position of door in body aperature (Corniche)

A	2,38 mm. (0.093 in.)	**E**	2,38 mm. (0.093 in.
B	4,76 mm. (0.187 in.)	**F**	1,59 mm. (0.062 in.)
C	11,11 mm. (0.437 in.) - seal gap.	**G**	2,38 mm. (0.093 in.)
D	2,38 mm. (0.093 in.)	**H**	2,38 mm. (0.093 in.)

2. Using the minimum amount of shims, adjust the door striker plate ensuring that the door does not raise when closed. Also, ensure that the rear edge of the door is level with the rear door on four-door cars or level with the car body on two-door cars.

When adjusted satisfactorily torque tighten the securing screws (see Chapter P).

3. Check the position of the window frame and adjust if necessary (see Window frame - To fit)

Door trim - To remove

Silver Shadow II, Bentley T2 and Silver Wraith II

1. Disconnect the battery.

2. Remove the arm rest.

3. Remove the arm rest slide. Retain the slide, screws and spacers to ensure correct assembly.

4. Remove the escutcheon covers from the window lift switch(es) and the window lift master switch on left-hand drive cars using a tool similar to the one shown in Figure S6. Insert the feet of the tool behind the cover and remove with a firm pull.

When removing a cover from a multiple switch control, insert the feet of the tool under each end of the cover alternately.

5. Using a small bladed tool remove the escutcheon covers from the interior door handle and the centralised door locking switch.

6. Remove the escutcheons from around the window lift switch(es), centralised door locking switch, master switch (if fitted) and interior door handle.

7. Remove the trim pad. A wedge shaped tool cut with a notch in the centre to accommodate the neck of the securing clips will assist in removal.

8. Remove the pocket. Retain the screws and large spacer to ensure correct assembly.

9. Remove the trim covered grab handle.

10. Remove the black waterproof dust cover.

11. Slacken the lock-nut on the lock control button adjuster (see Fig. S9, item 3) and unscrew the button and rod. Unscrew the lock-nut from the rod and remove the button.

12. Remove the wooden waist rail finisher and release the exterior mirror control knob by removing the small screws at the rear of the finisher.

Corniche

1. Repeat Operations 1, 2 and 3 from Door trim - To remove Silver Shadow II, Bentley T2 and Silver Wraith II.

2. Remove the escutcheon covers from the window lift switch(es) using a tool similar to the one shown in Figure S6. Insert the feet of the tool behind the cover and remove with a firm pull.

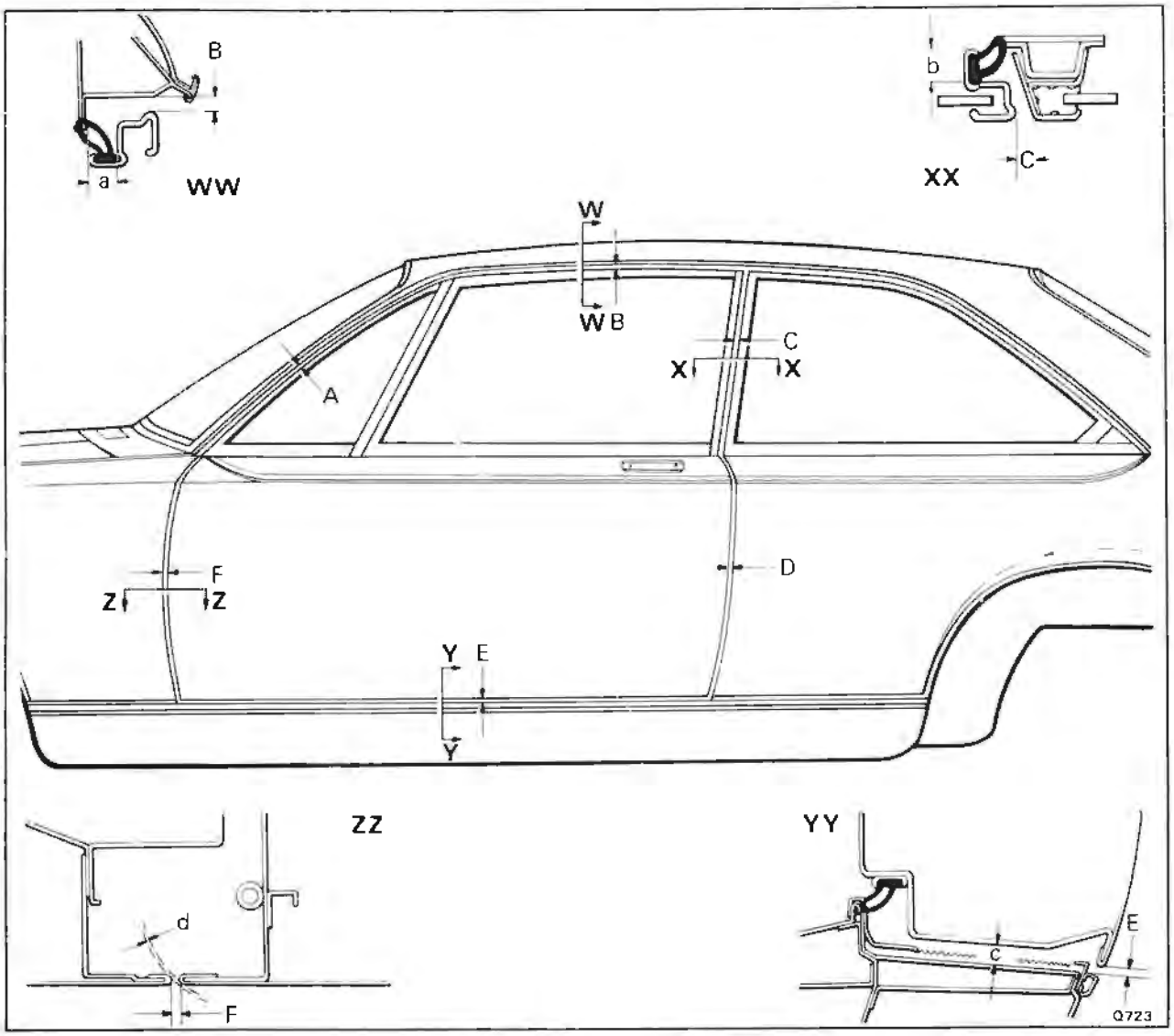

Fig. S5 Position of door in body aperture (Camargue)

- **A** 4,50 mm. to 6,50 mm. (0.177 in. to 0.259 in.)
- **B** 4,50 mm. to 6,50 mm. (0.177 in. to 0.259 in.)
- **C** 9,0 mm. to 10,0 mm. (0.354 in. to 0.394 in.) at outer edges of window frames.
- **D** 2,25 mm. to 4,25 mm (0.089 in. to 0.167 in.)
- **E** 3,0 mm. to 4,50 mm. (0.118 in. to 0.177 in.) - between bottom edge of door and body sill moulding strip
- **F** 3,25 mm. (0.127 in.)
- **a** 15,0 mm. to 17,0 mm. (0.590 in. to 0.670 in.) - seal gap, body to window frame.
- **b** 15,0 mm. to 17,0 mm. (0.590 in. to 0.670 in.) - seal gap, body to window frame.
- **c** 11,50 mm. to 13,0 mm. (0.453 in. to 0.511 in.) - between door lower panel and step plate.
- **d** 1,50 mm. to 2,50 mm. (0.060 in. to 0.098 in.) - swing clearance.

Note

All gaps to be parallel to within 0,79 mm. (0.031 in.). Door to be flush with the body to within 0,79 mm. (0.031 in.) in or out.

Inset illustrations WW, XX, YY and ZZ show the window frame to body seal gap dimension and details of door to body clearances.

When removing a cover from a multiple switch control, insert the feet of the tool under each end of the cover alternately.

3. Remove the escutcheon from around the window lift switch(es).

4. Remove the trim pad by releasing the retaining screws at the bottom edge of the door and bowing the pad slightly inwards to facilitate removal from the chrome channels.

5. Using a small bladed tool remove the escutcheon covers from the interior door handle and the centralised door locking switch.

6. Remove the escutcheons from around the centralised door locking switch and the interior door handle.

7. Remove the escutcheon fastening the seat switch to the small trim pad. Care must be taken during this operation to avoid damaging the chrome escutcheon or the leatherwork.

8. Remove the small trim pad.

9. Remove the screws securing the door step illumination lamp (Convertible cars only). Remove the lens and chrome surround. Detach the electrical leads and remove the lamp. Note the position and colour of the leads to ensure correct assembly.

10. Remove the loudspeaker trim panel.

11. Remove the wooden waist rail finisher and release the exterior mirror control knob by removing the small screws at the rear of the finisher.

Camargue

1. Disconnect the battery.

2. Remove the small trim panel from each side of the pocket on the door. A tool with a notch cut in the centre to accommodate the neck of the securing clips will assist in removal.

3. Remove the lower trim panel, bowing it inwards slightly to facilitate removal from the chrome channels.

4. Remove the screws securing the door step illumination lamp situated in the arm rest/door pull. Remove the lens and chrome surround. Detach the electrical leads and remove the lamp. Note the position and colour of the leads to ensure correct assembly.

5. Remove the black waterproof dust cover sufficiently to gain access to the apertures in the inner panel.

6. Remove the nut, bolt and washer securing the rear handle mounting bracket to the door.

7. Remove the nuts and washers securing the arm rest/door pull. Withdraw the arm rest/door pull to gain access to the link connecting the interior handle mechanism to the lock mechanism. Slacken the lock-nut on the link rod clamping bolt, disconnect the link and remove the arm rest/door pull (see Fig. S8).

8. Using a small bladed tool remove the escutcheon covers from the window lift switch(es) and the centralised door locking switch.

9. Remove the escutcheons from around the window lift switch(es) and the centralised door locking switch.

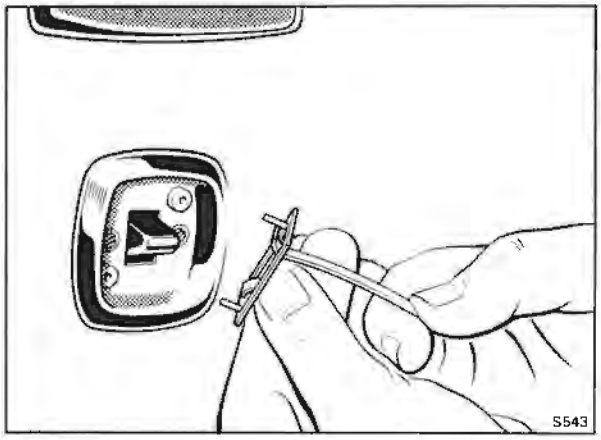

Fig. S6 Removing the escutcheon cover from an electric window lift switch

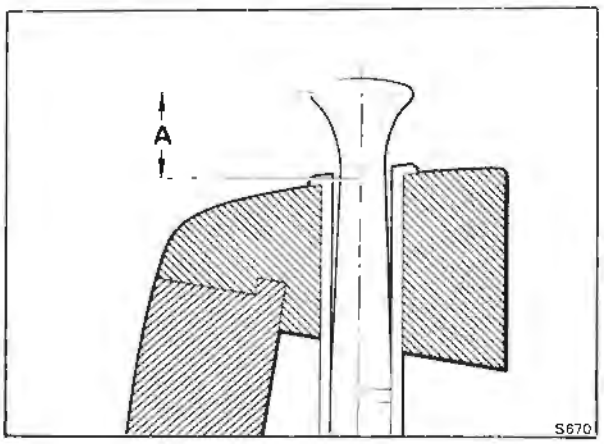

Fig. S7 Lock control button setting
A 12,7 mm. (0.50 in.)

10. Remove the screws and washers securing the upper trim panel, easing the panel from behind the wooden waist rail finisher and bowing it inwards slightly to facilitate removal from the chrome channels.

11. Remove the black waterproof dust cover.

12. Remove the wooden waist rail finisher by releasing the retaining screws and, the nuts and washers securing the upper arm rest handle and the rear of the finisher.

Door trim - To fit

All cars

To fit the door trim, reverse the procedure given for removal noting the following points.

1. Before fitting the trim pad(s) ensure that any loose debris is removed from the bottom of the door.

2. After fitting the waist rail finisher ensure that the adjustable door mirror can be operated satisfactorily by the control lever.

Printed in England
© Rolls-Royce Motors Limited 1978
August 1978
T.S.D. 4200

3. On Silver Shadow II, Bentley T2 and Silver Wraith II cars ensure that the following method of fitting the lock control button is used.

Insert the lock control rod through the bush in the waist rail finisher, thread the lock-nut onto the control rod then screw the rod into the upper solenoid rod. Adjust the lock-nut until the height of the lock control button when depressed is 12,70mm. (0.50in.) from the finisher to the head of the button (see Fig. S7).

4. On Camargue cars, when fitting the arm rest/door pull to the door, follow the procedure described in Interior door handle - To fit.

5. Check that all switches and interior door handle(s) are functioning correctly.

Door hinges - To remove

Silver Shadow II, Bentley T2, Silver Wraith II and Corniche

1. Remove the trim pad (see Door trim - To remove Operations 2 to 7 inclusive).
2. Remove the side scuttle panel and door (see Door - To remove, Operations 2 to 5 inclusive).
3. Detach the hinge seals from the door.
4. Detach the black waterproof dust cover from the door sufficiently to gain access to the hinge securing screws.
5. Mark the outline of the hinges onto the door inner panel to assist alignment during assembly.
6. Release the hinge securing screws and remove the hinges.

Note the number of shims fitted between the hinge faces and the door, to facilitate correct assembly.

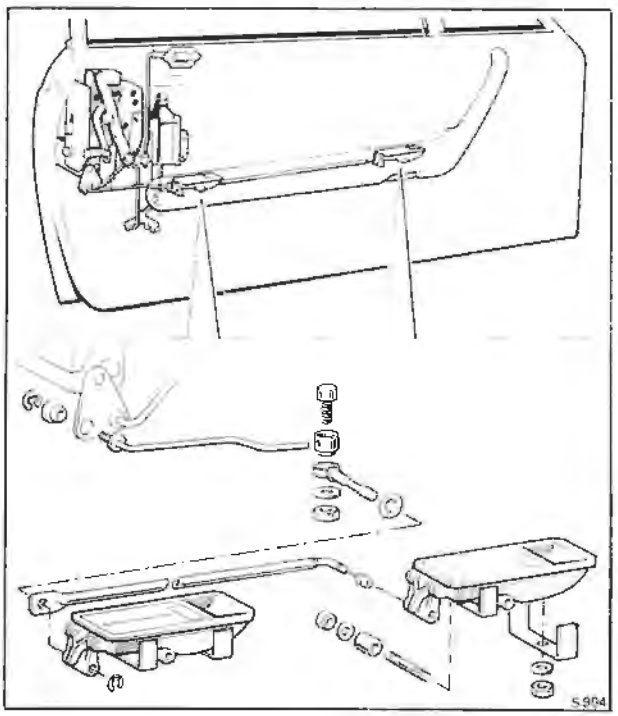

Fig. S8 Interior door handles (Camargue)

Camargue

1. Remove the door trim panels (see Door trim - To remove, Operations 2 to 11 inclusive).
2. Remove the side scuttle panel and door (see Door - To remove, Operations 2 to 7 inclusive).
3. Remove the spring clip from the pivot pin securing the detent lever (upper hinge) and check arm (lower hinge) to the front leaf of each respective hinge; remove both pivot pins.
4. Detach the detent plate from the upper hinge front leaf and remove the plate from the check mechanism.
5. Mark the outline of the hinges onto the door inner panel to assist alignment during assembly.
6. Release the hinge securing screws and remove the hinges. Note the spacer fitted to each of the upper hinge securing screws; these spacers are located between the check mechanism and the hinge leaf. To facilitate correct assembly, note the number of shims fitted between the hinge faces and the door

Door hinges - To fit

All cars

To fit the hinges reverse the procedure given for removal noting the following points.

1. On Silver Shadow II, Bentley T2 and Silver Wraith II cars fit the hinge seal by pressing it into position with the fasteners.

On Corniche cars attach the seals into position on the door with Bostik Adhesive 1261.

On Camargue cars position the seals on the hinges and secure with Bostik Adhesive 1261.

2. Lubricate all pivots and moving parts, except the cam profiles of the upper hinge check mechanism, with EP 140 SC light mineral oil.
3. Before fitting the door trim panel(s), check the position of the door in the body aperture (see Door - To fit); adjust if necessary.
4. When the door is positioned satisfactorily torque tighten the hinge securing screws (see Chapter P).

Interior door handles - To remove (see Fig. S8)

Camargue

1. Disconnect the battery
2. Remove the arm rest/door pull (see Door trim - To remove).
3. Remove the setscrew securing the mounting bracket to the rear handle; remove the bracket and collect the distance piece.
4. Disconnect the handle connecting rod from the front handle by pulling the angled end of the rod out of the handle.
5. Remove the nuts, washers and 'U' shaped clamps securing the rear handle to the arm rest then, remove the handle complete with the connecting rod.
6. To detach the connecting rod from the rear handle remove the circlip retaining the link pin to the handle. Withdraw the link pin and retain the waved washer fitted between the connecting rod and the collar of the link pin.
7. Remove the stud from the front door handle then remove the nuts, washers and 'U' shaped clamps

securing the handle to the arm rest. Remove the front handle.

Note that it is necessary to remove the stud from the handle to allow the handle to be removed and fitted into the arm rest.

Interior door handles - To fit (see Fig. S8)
Camargue

1. Prior to fitting, check that both handles will pivot freely in their surrounds.
2. Fit the connecting rod to the rear handle with the link pin and secure with the circlip. Ensure that the waved washer is fitted between the rod and the link pin collar.
3. Remove the stud from the front handle then fit both handles to the arm rest. Secure the handles in position with the clamps, nuts and washers.

Fit the stud to the front handle.

4. Check that the handles are operating correctly. If adjustment is required to the length of the rod, slacken the lock-nut at the front end of the rod and screw the angled end in or out as required. Tighten the lock-nut.
5. Fit the bracket and distance piece to the rear handle; secure with the setscrew and washer.
6. Locate the distance piece on the front stud of the arm rest/door pull assembly, then fit to the door. Ensure that any spacing washers are fitted to the other three studs but do not tighten the securing nuts at this stage.
7. Slide the link rod from the door lock lever into the clamping bolt and sleeve on the link pin, then torque tighten the clamping bolt lock-nut (see Chapter P).
8. Hold the arm rest/door pull assembly in position and check the release operation of both handles. If necessary, slacken the clamp bolt lock-nut and adjust the position of the link rod in the clamping sleeve until the handle operation is satisfactory, then torque tighten the lock-nut to the figure specified in Chapter P.
9. Tighten the nuts securing the arm rest/door pull to the door and secure the rear mounting bracket.
10. Fit the lower door panels by reversing the procedure given for their removal (see Door trim - To fit).

Electric window lift mechanism - To remove
Silver Shadow II, Bentley T2 and Silver Wraith II (see Fig. S9)

1. Remove the door trim pad and waist rail finisher assembly (see Door trim - To remove).
2. Lower the window glass until the setscrew securing the glass to the window lift mechanism (see Fig. S9, item 6) is visible through the inner panel aperture.
3. Disconnect the battery.
4. Remove one of the screws securing the chain channel steady strap to the upper part of the window lift channel.
5. Disconnect the electrical leads to the window lift motor at the Lucar connections noting the colour code of the leads to ensure correct assembly.
6. Remove the setscrew securing the window support bracket to the chain channel noting the number and position of any spacing washers to ensure correct assembly.

Whilst carrying out this operation the window glass should be supported then, upon detachment from the lift mechanism, moved to the fully closed position. The glass should then be secured in this position with masking tape.

7. Remove the two rubber grommets from the holes in the bottom face of the door.
8. Remove the setscrews securing the window lift mechanism to the base of the door. To facilitate assembly, note the number and position of any spacing washers.
9. Remove the window lift mechanism by manoeuvring it through the aperture in the bottom of the door inner panel.
10. For information on the servicing and dismantling of the electric window lift assembly refer to Chapter M.

Corniche and Camargue (see Figs. S10 and S11)

1. Repeat Operations 1, 2 and 3 from Electric window lift mechanism - To remove, Silver Shadow II, Bentley T2 and Silver Wraith II.
2. Remove the two bolts and washers securing the chain channel upper bracket to the door. Retain any distance pieces and note their position to ensure correct alignment of the window mechanism upon assembly.
3. Disconnect the electrical leads to the window lift motor at the Lucar connections noting the colour code of the leads to ensure correct assembly.
4. Remove the two bolts, nuts and washers securing the arm and back-plate assembly to the window pick-up plate. Detach the arm of the back-plate from the roller of the chain channel slider bracket and remove the arm and back-plate assembly.

Whilst carrying out this operation the window glass should be supported then, upon detachment from the lift mechanism, moved to the fully closed position. The glass should then be secured in this position with masking tape.

Note
If the same window lift mechanism being removed is to be refitted, to assist alignment, scribe correlation marks on the pick-up plate and back-plate prior to slackening the securing bolts.

5. Repeat Operations 7 to 10 inclusive from Electric window lift mechanism - To remove, Silver Shadow II, Bentley T2 and Silver Wraith II.

Electric window lift mechanism - To fit

To fit the window lift mechanism reverse the procedure given for removal noting the following points.

Silver Shadow II, Bentley T2 and Silver Wraith II

1. Lubricate the mounting bolts and nuts with

Printed in England
© Rolls-Royce Motors Limited 1978
August 1978
R.S.D. 4200

Retinax 'A' grease or its equivalent during assembly. Ensure that the lubricant does not come into contact with the window glass or channel seals.

2. Do not tighten the two setscrews securing the window lift mechanism to the base of the door until the following operations have been carried out.

3. Fasten the rubber steady strap around the chain channel.

4. Fit the setscrew securing the window support bracket to the chain channel. Ensure that the space

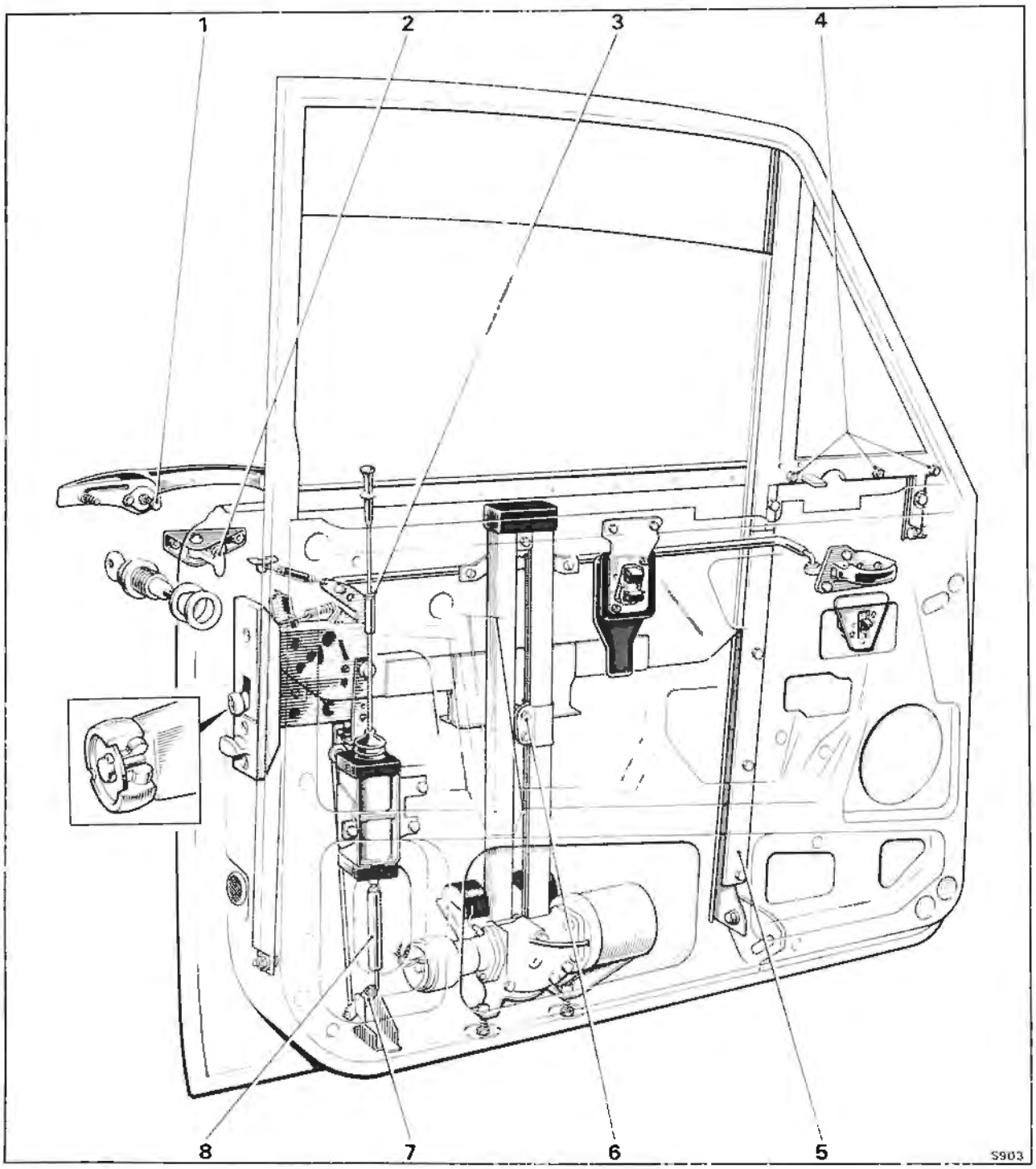

Fig. S9 Construction of a front door

1 Push button adjustment screw
2 Actuator lever assembly
3 Lock-nut, lock control button adjustment
4 Lower quarter window seal support plate screws
5 Closing plate - window frame channel
6 Setscrew - window support bracket to chain channel slider
7 Pivot lever assembly
8 Solenoid spring link

between the window support plate and the lift pick-up plate is taken up by the correct amount of washers.
5. Energise the window lift mechanism. If the window glass moves smoothly up and down its channel tighten the setscrews.

If the window glass produces a slight scraping noise when energised adjust the bottom of the window lift mechanism by moving it in or out as required, tightening the setscrews each time until the glass runs smoothly in its channel.

Corniche and Camargue
1. Lubricate the mounting bolts and nuts with Retinax 'A' grease or its equivalent during assembly. Ensure that the lubricant does not come into contact with the window glass or channel seals.
2. Do not tighten the two setscrews securing the window lift mechanism to the base of the door until the following operations have been carried out.
3. Fit the two bolts, washers and spacers to the upper mounting points.
4. If a new window or window lift mechanism has been fitted it may be necessary to reset the window on its pick-up plate.

Adjust the window by means of the elongated holes of the pick-up plate so that when it reaches its maximum upward travel the top edge of the glass is evenly located against the top face of the window channel seal.
5. On Camargue cars if a new window or window lift mechanism has been fitted it will be necessary to reset the window as follows.

Set the rollers in the guide channel (see Fig. S11, item 5) so that the upper roller is in contact with the forward side of the channel and the lower roller is in contact with the rear face of the channel. This ensures that the forward end of the glass will not drop.
6. Energise the window lift mechanism. If the window glass moves smoothly up and down its channel tighten the setscrews.

If the window glass produces a slight scraping noise when energised adjust the bottom of the window lift mechanism by moving it in or out as required, tightening the setscrews each time until the glass runs smoothly in its channel.

Window counter balance mechanism - To remove (see Fig. S11)
Camargue
1. Ensure that the window is fully raised, then disconnect the battery.
2. Remove the door trim panels and waist rail finisher (see Door trim - To remove).
3. Remove the two bolts and washers securing the chain channel upper bracket to the door. Retain any distance pieces and note their position to ensure correct alignment of the window mechanism upon assembly.
4. Remove the screws securing the waist rail closing panel to the door inner panel.
5. Detach the two counter balance extension springs from the hooks on the window pick-up plate extension beam. Remove the closing panel, complete with the reel mechanism. During removal, detach the link rod from the switch lever.
6. Remove the two nuts and washers securing the counter balance reel mounting bracket assembly to the closing panel; remove the assembly from the panel.
7. To remove the reels from the mounting bracket, first remove the circlip on the end of each reel spindle then slide the reel off the spindle.

Window counter balance mechanism - To fit
Camargue
To fit the counter balance mechanism reverse the procedure given for removal noting the following points.
1. Before fitting the reels to the mounting bracket apply Retinax 'A' grease or its equivalent to the reel spindles.
2. Seal the waist rail closing panel to the door with Prestik sealing strip.

Electrically operated window glass - To remove
Silver Shadow II, Bentley T2 and Silver Wraith II
1. Remove the door trim pad and waist rail finisher (see Door trim - To remove).
2. Lower the window glass until the setscrew securing the glass to the window lift mechanism (see Fig. S9, item 6) is visible through the inner panel aperture.
3. Disconnect the battery.
4. Remove the electric window lift assembly (see Electric window lift mechanism - To remove).
5. Remove the waist rail closing panel.
6. Remove the closing plate from the front channel of the window frame (see Fig. S9, item 5).
7. Slide the window glass down through the frame until it is free of the channel then up through the space between the window frame and the inboard side of the door.

Corniche Saloon
1. Remove the door trim pad and waist rail finisher (see Door trim - To remove).
2. Remove the screws from across the top of the door waist rail panel. To obtain access to the screws lower the window glass to its extremity.
3. Energise the window glass until the setscrew securing the glass to the window lift mechanism (see Fig. S10, item 5) is visible through the inner panel aperture.
4. Remove the setscrew securing the window support bracket to the chain channel noting the number and position of any spacing washers to ensure correct assembly.

Whilst carrying out this operation the window glass should be supported then, upon detachment from the lift mechanism, moved to the fully closed position. The glass should then be secured in this position with masking tape.

Printed in England
© Rolls-Royce Motors Limited 1978
August 1978
T.S.D. 4200

5. Remove the screws located under the quarter window.
6. Remove the two screws on the leading face of the frame.
7. Remove the two nuts securing the bottom of each window frame leg (see Fig. S10).
8. Remove the complete window glass and frame.
9. Slide the glass out of the frame.

Corniche Convertible

1. Remove the door trim pad and waist rail finisher (see Door trim - To remove).
2. Detach the upper end of the sealing felt from the front window channel. Remove the screw from inside the top of the channel securing the stop plate; remove the stop plate from the channel.
3. Disconnect the tension strap of the spring balance unit from the runner plate in the rear window channel.
4. Scribe correlation marks around the washers which fit under the heads of the setscrews securing the window frame slide bracket to the runner plate in the rear window channel; remove the setscrews.
5. Energise the window glass until the setscrew securing the glass to the window lift mechanism (see Fig. S10, item 5) is visible through the inner panel aperture.
6. Support the window frame. Remove the setscrew securing the window support bracket to the chain channel noting the number and position of any

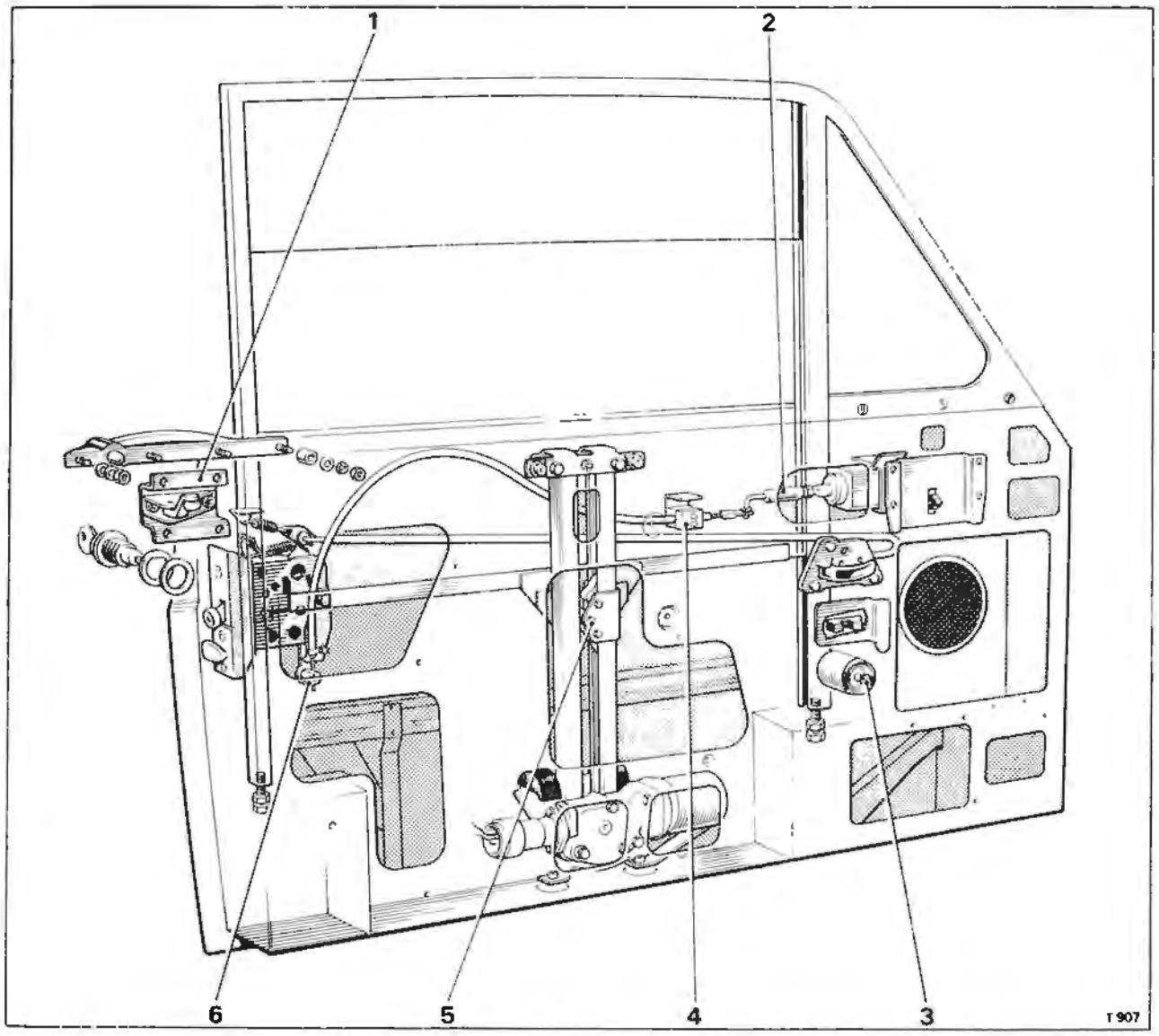

Fig. S10 Construction of a door (Corniche)

1 Actuator lever assembly
2 Solenoid spring link
3 Electrically operated seat switch control
4 Cable securing block
5 Setscrew - window support bracket to chain channel slider
6 Pivot bolt - retaining the cable to the lock lever

spacing washers to ensure correct assembly.
7. Slide the glass and glass frame upwards out of the channels.

Camargue
1. Repeat Operations 1, 2 and 3 from Electrically operated window glass - To remove, Silver Shadow II, Bentley T2 and Silver Wraith II.
2. Ensure that the window glass is secured in the raised position then remove the window counter balance mechanism (see Window counter balance mechanism - To remove).
3. Scribe correlation marks around the washers which fit under the heads of the two setscrews securing the window guide roller carrier plate to the extension bracket on the window pick-up plate. Remove the two setscrews then remove the carrier plate and rollers by sliding the rollers out of their channel.
4. Remove the screws securing the waist rail closing panel. Withdraw the panel sufficiently to enable the lock link rod to be pulled out of the nylon bush in the manual locking switch lever, then remove the closing panel.
5. Remove the tape securing the window glass in the raised position. Slide the glass down through the frame, lowering the front end and rotating the glass through 90°, before lifting it through the space between the window frame and the door inner panel.
6. To remove the rollers from the guide plate, first remove the circlip securing each roller then slide the rollers off the pins.

Electrically operated window glass - To fit
All cars
To fit the window glass reverse the procedure given for removal noting the following points.
1. Before fitting the window glass ensure that any dirt, fragments of glass, etc. are removed from the door.
2. Ensure that the window and channel seals are in good condition.
3. On Corniche Saloon cars, as the window frame and glass are removed together, it will be necessary to reset the frame position (see Window frame - To remove).
4. Either plain or tinted (Sundym) glass may be fitted therefore before fitting a new window glass it should be compared with the original glass, or alternatively with the glass in the other doors, to ensure that it is of the correct type.
5. On Camargue cars note the following.
a. Lubricate the guide plate roller spindles with Retinax 'A' grease or its equivalent during assembly.
b. Align all correlation marks made during removal If a new window glass has been fitted it may be necessary to reset the window (see Electric window lift mechanism - To fit).
c. Adjust the guide roller plate so that the upper roller is in contact with the front guide and the lower roller is in contact with the rear guide.

Window frame - To remove
Silver Shadow II, Bentley T2 and Silver Wraith II
1. Disconnect the battery.
2. Remove the door trim and waist rail finisher (see Door trim - To remove).
3. Remove the window glass (see Electrically operated window glass - To remove).
4. Remove the door to body seal (see Door to body seal - To remove).
5. Using a 4,76mm. (0.157in.) diameter drill, remove the pop rivets securing the window frame reveal strip plate to the door. Remove the reveal strip plate.
6. Remove the setscrews securing the window frame to the door. Remove the frame.

Corniche Saloon
1. Refer to Electrically operated window glass - To remove, as the window glass and frame are removed as a unit.

Corniche Convertible
1. Refer to Electrically operated window glass - To remove, as the glass and glass frame are removed as a unit.
2. Remove the door trim and waist rail finisher (see Door trim - To remove).
3. Remove the combined front channel/quarter window frame by releasing the two screws in the leading edge of the frame, the screws under the quarter window and the nut securing the foot of the channel to the door.
4. Remove the rear window frame channel by releasing the two screws from the bracket on the upper end of the channel and the nut securing the lower end.

Camargue
1. Repeat Operations 1 to 4 inclusive from Window frame - To remove, Silver Shadow II, Bentley T2 and Silver Wraith II.
2. Remove the setscrews securing the lower closing plate of the fixed quarter light to the door.
3. Remove the screws securing the frame cross rail/seal carrier to the door.
4. Scribe correlation marks around the washers of the setscrews securing the vertical members of the window frame to the door then remove the setscrews, note the number and position of any spacing washers to assist alignment during assembly.
5. Remove the window frame from the door.

Window frame - To fit
To fit the window frame reverse the procedure given for removal noting the following points.
Silver Shadow II, Bentley T2 and Silver Wraith II
1. Before fitting the window frame to the door check the position of the door in the body aperture and adjust if necessary (see Door - To fit, Operation 2).
2. Check the condition of the glass seals in the

Printed in England
© Rolls-Royce Motors Limited 1978
August 1978
T.S.D. 4200

reveal strip plate and the window channels; fit new seals if necessary.
3. Ensure that the fixed quarter window is correctly fitted into the frame prior to fitting the frame into the door.
4. If the original window frame is being fitted, ensure that any spacing washers are in position and that any correlation marks are aligned correctly.
5. Fit the window frame to the door and finger tighten the securing bolts and nuts; do not fit the pop rivets to the reveal strip plate at this stage.
6. Close the door, then adjust the position of the frame until the frame to body clearances correspond with the measurements shown in Figure S3.
7. Tighten the frame securing bolts.
8. Secure the reveal strip plate with pop rivets

Corniche
1. Repeat Operations 1 to 4 inclusive from Window frame - To fit, Silver Shadow II, Bentley T2 and Silver Wraith II.
2. On Saloon cars acquire three wooden blocks measuring 11,11 mm. (0.437 in.) square and 5,08 cm (2.0 in.) long. Temporarily attach the blocks to the seal face of the frame. The blocks should be equally spaced, one on each side member and one on the upper crossmember.
3. Fit the window frame to the door and finger tighten the securing bolts and nuts.
4. Close the door, then adjust the position of the frame until the frame to body clearances correspond with the measurements shown in Figure S4.

On Saloon cars ensure that the wooden blocks contact the seal face on the body.

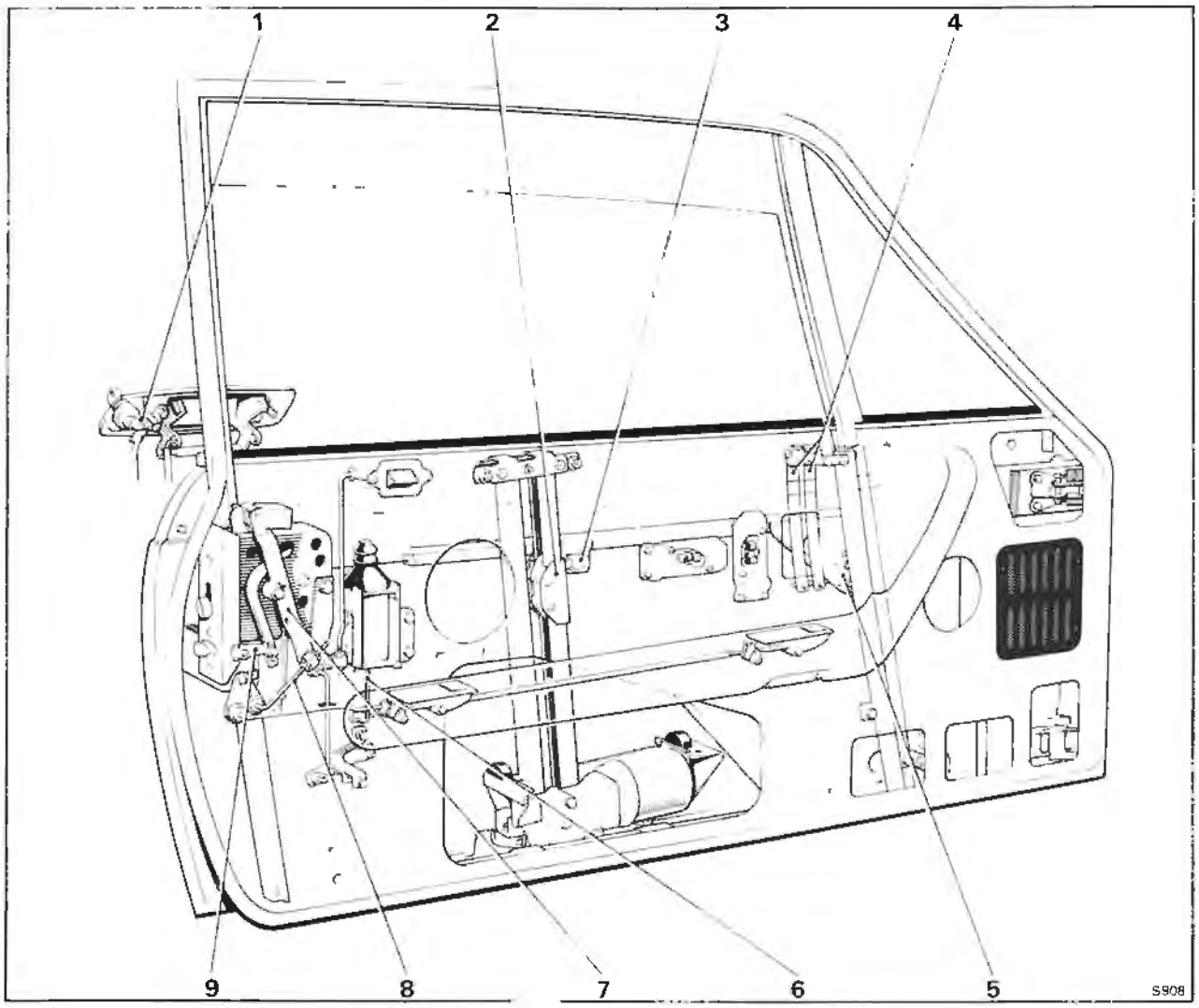

Fig. S11 Construction of a door (Camargue)
1 Cranked lever - private lock
2 Chain channel slider
3 Arm and back plate assembly
4 Counter balance extension springs
5 Guide roller plate
6 Solenoid spring link
7 Lock balance lever
8 Link rod - balance lever to lower cross-shaft lever
9 Upper cross-shaft lever

On Convertible cars align the window glass with the rear quarter window glass.
5. Tighten the frame securing bolts and remove the wooden blocks from the frame.

Camargue
1. Repeat Operations 1 to 4 inclusive from Window frame - To fit, Silver Shadow II, Bentley T2 and Silver Wraith II.
2. Fit the window frame to the door and finger tighten the securing bolts and nuts.
3. Close the door, then adjust the position of the frame until the frame to body clearances correspond with the measurements shown in Figure S5.
4. Tighten the frame securing bolts.

Fixed quarter window glass - To remove
Silver Shadow II, Bentley T2, Silver Wraith II and Camargue
1. Remove the window frame (see Window frame - To remove).
2. Remove the 2BA nuts, washers and countersunk headed screws securing the support plate. Remove the plate and lower seal from under the quarter window.
3. Withdraw the quarter window from the frame.
4. Remove the two remaining sections of the seal.

Corniche
1. Remove the window frame (see Window frame - To remove).
2. Remove the seal from the front window channel sufficiently to gain access to the screws located in the channel then, remove the screws.
3. Remove the countersunk headed screws from the leading face of the quarter window frame.
4. By applying pressure to the exterior edges of the quarter window, remove the window together with its glazing surround.

During this operation support the window on the inboard side.

Fixed quarter window glass - To fit
To fit a quarter window glass reverse the procedure given for removal noting the following points.
Silver Shadow II, Bentley T2 and Silver Wraith II
1. Prior to fitting the seals, ensure that the channels are clean and free from obstructions.
2. If new quarter window seals are to be fitted ensure that the side of the seal having the four protrusions moulded into it faces inboard.

Corniche
1. Before fitting the quarter window glass and seals ensure that the recess of the frame is clean, then fit to the channel with Goldsize Adhesive.

Camargue
1. Repeat Operations 1 and 2 from Fixed quarter window glass - To fit, Silver Shadow II, Bentley T2 and Silver Wraith II.
2. Seal the joint in the quarter window frame to the electrically operated window frame with Glasticon Sealer 265.
3. Fit the quarter window glass, complete with the lower channel and seal, into the window frame.

If a new quarter window is being fitted, remove the lower channel from the old glass and fit the new glass and seal to the channel with Goldsize Adhesive prior to fitting the quarter glass into the frame.

Door lock and linkage - To remove
Silver Shadow II, Bentley T2 and Silver Wraith II (see Fig. S9)
1. Disconnect the battery.
2. Remove the door trim and waist rail finisher (see Door trim - To remove).
3. Disconnect the remote control rod connecting the interior door handle to the lock.
4. Remove the control rod situated between the pivot lever assembly and the lock.
5. Detach the return spring from the lock remote control lever.
6. Remove the setscrew securing the lock to the door panel. Retain any spacing washers situated between the outer face of the lock and the door panel.
7. Straighten the legs of the split pin retaining the roller to the lock bolt, rotate the roller until the slot in the outer lip of the roller is aligned with the head of the split pin. Remove the roller and washer from the lock bolt.
8. Support the lock. Remove the countersunk headed screws and cup washers securing the lock to the rear edge of the door, disengage the spade end of the private lock from the back of the door lock and remove the door lock.
9. Press the pivot lever assembly towards the rear edge of the door until the lever boss abuts the rear nylon bush. Remove the bush at the forward end of the lever spindle. Push the free end of the spindle into the hole vacated by the bush until the other end of the spindle is also free from its bush; remove the pivot lever assembly (see Fig. S12).
10. Remove the interior door handle. Detach the open end of the polythene bag from the door and disconnect the remote control rod.

Corniche (see Fig. S10)
1. Repeat Operations 1, 2 and 3 from Door lock and linkage - To remove, Silver Shadow II, Bentley T2 and Silver Wraith II.
2. Detach the return spring from the lock remote control lever.
3. Remove the nut and bolt securing the centralised door locking cable to the lock.
4. Slacken the nut securing the centralised door locking cable to the pivot bolt in the lock lever and withdraw the cable.
5. Repeat Operations 6, 7, 8 and 10 from Door lock and linkage - To remove, Silver Shadow II, Bentley T2 and Silver Wraith II.

Printed in England
© Rolls-Royce Motors Limited 1978

Camargue (see Fig. S11)

1. Repeat Operations 1 and 2 from Door lock and linkage - To remove, Silver Shadow II, Bentley T2 and Silver Wraith II.
2. Disconnect the link rods from the locking lever of the door lock.
3. Remove the link rod connecting the door lock balance lever to the lower cross-shaft lever. Disconnect both the lower end of the rod and the swivel link pin end out of the nylon bushes (see Fig. S11, item 8).
4. Detach the return spring from the lock balance lever and remove the spring together with the connecting link.
5. Remove the nut and washer securing the upper cross-shaft lever (see Fig. S11, item 9) to the angled lever on the door lock; disconnect the levers.
6. Remove the bolt and nut securing the lever to the upper cross-shaft; remove the lever.
7. Remove the two setscrews securing the cross-shaft bracket to the lock.
8. Straighten the legs of the split pin retaining the roller to the lock bolt, rotate the roller until the slot in the outer lip of the roller is aligned with the head of the split pin. Remove the roller and washer from the lock bolt.
9. Support the lock. Remove the countersunk headed screws securing the lock to the rear edge of the door; remove the lock.

Door lock mechanism - To check

All cars

1. Check the condition of the lock bolt roller. If necessary, straighten the legs of the split pin retaining the roller to the lock bolt, rotate the roller until the slot in the outer lip of the roller is aligned with the head of the split pin. Remove the roller and washer from the lock bolt.

Note

Always use a new split pin when fitting the lock bolt roller.

2. Check that the roller rotates freely on the lock bolt and does not bind on the head of the split pin.
3. Remove the lock from the door (see Door lock and linkage - To remove).

Check that the contact lever spring of the door lock mechanism fully returns the lever from the full on to the full off position.

Ensure that the rivets in the lock are secure.

4. Check that the exterior door handle operates by fully raising the lock bolt, moving the lock control button (Silver Shadow II, Bentley T2 and Silver Wraith II) or manual lock control lever (Camargue) up (unlock position) and then operate the door handle. Check that the bolt moves down (see Fig. S16).

If the lock is removed from the door, the lock control lever should be moved down and the contactor lever pressed to carry out this check.

5. Fully raise the lock bolt; move the lock control button (Silver Shadow II, Bentley T2 and Silver Wraith II) or manual lock control lever (Camargue) down (lock position) then operate the door handle. Check that the bolt does not move down.

If the lock is removed from the door, the lock control lever should be moved up and the lock contactor lever pressed to carry out this check.

6. Check the operation of the interior door handle(s) following the some procedure as described in Operations 4 and 5 (see Fig. S13).

On Camargue cars check each interior handle in turn.

7. Check the operation of the self-cancelling mechanism by moving the lock control button or manual lock control lever to the lock position (down),

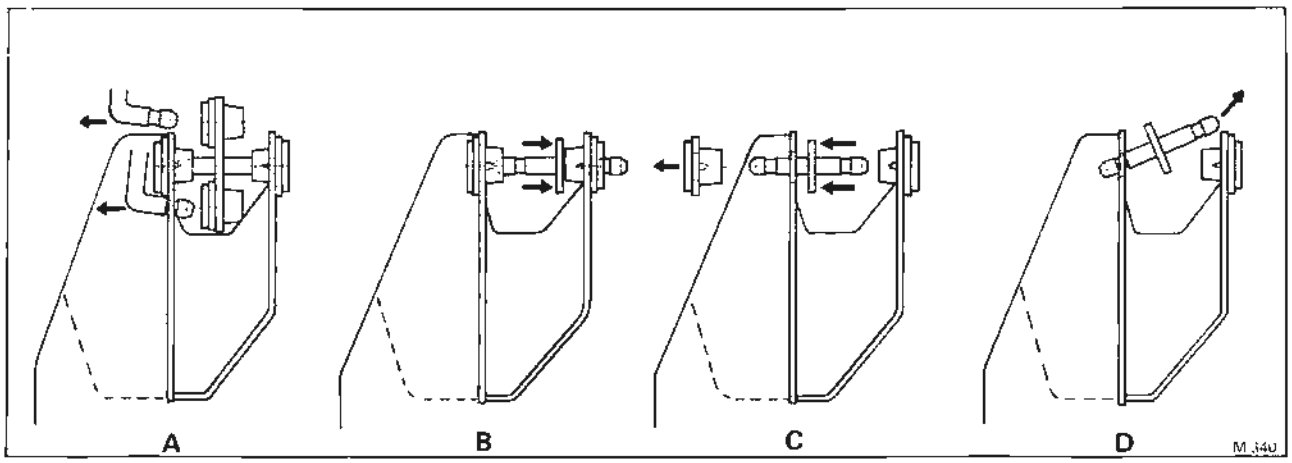

Fig. S12 Removing a pivot lever assembly (Silver Shadow II, Bentley T2 and Silver Wraith II)

A Control rods disconnected from pivot lever
B Pivot lever spindle pressed into rear bush until lever abuts rear bush
C Front bush removed from door bracket and pivot lever spindle pressed out of rear bush into hole vacated by front bush
D Pivot lever assembly tilted for removal from door bracket.

then fully raise the lock bolt. The lock control button or manual lock control lever should move to the unlocked position.

8. Check the keyless locking mechanism by moving the lock control button or manual lock control lever to the lock position (down), operate the exterior door handle and hold, then, raise the lock bolt. The lock control button or manual lock control lever should stay down.

If the lock is removed from the door, the lock control lever should be raised and the lock contactor lever pressed to carry out this check.

9. Check the operation of the key locking mechanism as follows.

Fit the door key into the lock, turn the key alternately in opposite directions; check that the lock control button or manual lock control lever moves to the locked and unlocked positions in sequence with the key movement.

If the door lock is removed, the operating cam should be turned instead of the key and the lock operating lever checked to ensure that it moves up and down in sequence with the cam movement.

10. Raise the lock bolt to the half-way position, then repeat Operations 4 to 9 inclusive.

Door lock and linkage - To fit

To fit the door lock and linkage reverse the procedure given for removal noting the following points.

Silver Shadow II, Bentley T2 and Silver Wraith II

1. During assembly lubricate the following points with Rocol MTS 1000 grease.

The spade end of the private door locks.

The pivot points and contact faces of the exterior door handle and contactor lever assembly. Also the pivot points on all lock linkages.

2. Adjust the position of the interior door handle remote control linkage as follows.

Fit the door lock and control rods noting that there are two bushes fitted into the interior door handle mounting bracket (see Fig. S13); fit the remote control rod to the rearmost bush.

Take up the free play in the handle-to-lock linkage by adjusting the position of the interior door handle on its elongated holes. Adjust the handle until the lock bolt is triggered off from its fully raised position at approximately 3,17 mm. (0.125 in.) before the contactor lever reaches the end of its travel.

This travel can be checked by looking through the door panel aperture and checking the movement of the lock remote control lever. This lever is controlled by, and travels exactly the same distance as, the contactor lever (see Fig. S13, inset). This represents approximately 2° of handle travel.

At the point when the lock bolt is triggered off, it should be possible to move the lock bolt up and down by hand without any sign of interference. If interference is felt, difficulty will be experienced opening and closing the door.

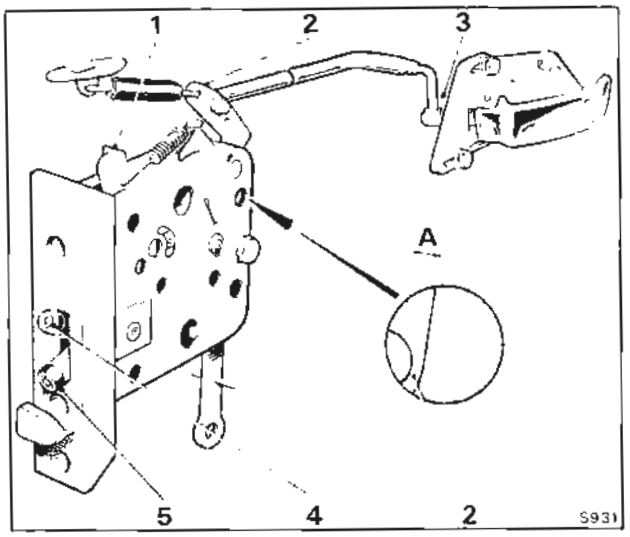

Fig. S13 Interior door handle adjustment (Silver Shadow II, Bentley T2 and Silver Wraith II)

A 3,17 mm. (0.125 in.)
1 Lock contactor lever
2 Lock remote control lever
3 Forward bush - remote control rod
4 Lock bolt (raised position)
5 Lock bolt (lowered position)

Dotted line in inset indicates position of lock remote control lever when door handle has reached full extent of travel

Note

If all the free play in the handle-to-lock linkage cannot be taken up by adjusting the position of the interior door handle on its elongated holes, fit the remote control rod to the forward bush in the interior handle bracket.

3. If it is required to fit a new polythene bag around the interior door handle mechanism cut off a corner of the bag, as small as possible, and push the remote control rod through the hole so that the interior handle end of the rod is inside the bag.

Using the rubber sleeve, secure the bag to the rod positioning the sleeve up to the 90° bend in the rod, leaving approximately 25,40 mm. (1.9 in.) of the rod inside the bag.

Fit the remote control rod to the lock.

Pull the open end of the bag through the door handle aperture in the inner panel. Using Dunlop Adhesive S81, secure the open end of the bag around the lip of the aperture with aoproximately 9,53 mm. (0.375 in.) overlap.

Fit the interior door handle to the remote control rod.

Secure the handle to the door, trapping the open end of the polythene bag between the handle and the door.

Adjust the handle and remote control linkage as described in Operation 2. Check that the handle operates without unduly straining the polythene bag.

Printed in England
© Rolls-Royce Motors Limited 1978
August 1978
T.S.D. 4200

4. Check that the door can be locked from inside and outside the car and that when locked both the interior and exterior door handles are inoperative.

Corniche
1. Repeat Operations 1, 2 and 3 from Door lock and linkage - To fit, Silver Shadow II, Bentley T2 and Silver Wraith II.
2. Check that the door can be locked from inside and outside the car and that when locked the exterior door handle is inoperative; note that the interior door handle should be operative at all times irrespective of whether the door is locked or not.

Camargue
1. During assembly lubricate the following points with Rocol MTS 1000 grease.
The spade end of the private door locks.
The pivot points and contact faces of the exterior door handle, and contactor lever assembly. Also the pivot points on all lock linkages.
2. Before fitting the cross-shaft links to the lock adjust the lower link on the door lock as follows.
3. Slacken the setscrews securing the relay pivot bracket to the door.
4. Position the door locking lever in the fully raised (unlocked) position.
5. Fit the link rod between the door locking lever and the relay pivot lever.
6. Tighten the setscrews securing the relay pivot bracket to the door.
7. Fit the cross-shaft links to the lock and adjust for correct operation as follows.
8. Slacken the bolts and nuts on the upper and lower cross-shafts levers.
9. With the cranked lever of the private lock in the unlocked position and the link pin central in the slot of the angled door lock lever, tighten the bolt and nut on the upper cross-shaft lever.
10. Slacken the lock-nuts on the link rod and swivel block assembly connecting the lower cross-shaft link to the lock balance lever. Adjust the rod to deflect the upper lock lever by a minimum of 1,59 mm. (0.062 in.) to spring tension all the lock links. Tighten the lock-nuts.
11. Tighten the bolt and nut on the lowe cross-shaft lever.
12. Check that the doors can be locked and unlocked using the manual lever on the waist rail and also the door key.
When a door is locked, the interior and exterior handles should not operate the door lock.

Centralised door locking solenoid and linkage - To remove
Silver Shadow II, Bentley T2 and Silver Wraith II
1. Disconnect the battery.
2. Remove the door trim (see Door trim - To remove).
3. Disconnect the electrical leads to the solenoid at the Lucar connections; note the colour code of the leads to ensure correct assembly.
4. Disconnect the spring link rod from the pivot lever.
5. Remove the screws securing the solenoid to the door panel. Remove the solenoid and spring link assembly.
6. To remove the pivot lever assembly and lock control rod from the base of the door press the pivot lever towards the rear edge of the door until the lever boss abuts the rear nylon bush. Remove the bush at the forward end of the lever spindle. Push the free end of the spindle into the hole vacated by the bush until the other end of the spindle is also free from its bush; remove the pivot lever assembly (see Fig. S12).

Corniche
1. Repeat Operations 1, 2 and 3 from Centralised door locking solenoid and linkage - To remove, Silver Shadow II, Bentley T2 and Silver Wraith II.
2. Disconnect the spring link rod from the cable connector.
3. Remove the screws securing the solenoid to the door panel.
4. To remove the cable and conduit, release the screws securing the block to the door at the forward end of the cable. Remove the block together with the cable and conduit.

Camargue
1. Repeat Operations 1 to 5 inclusive from Centralised door locking solenoid and linkage - To remove, Silver Shadow II, Bentley T2 and Silver Wraith II.
2. To remove the pivot lever and relay/bracket assembly, detach the control rod connecting the pivot lever to the lock. Release the setscrews and washers securing the relay/bracket to the door then remove the relay/bracket and pivot lever assembly.
3. To remove the manual locking lever proceed as follows.
Remove the wooden waist rail finisher (see Door trim - To remove).
Disconnect the window lift chain channel by removing the nuts, bolts and washers. Retain any distance pieces fitted between the chain channel and the door noting their position to ensure correct assembly.
Disconnect the lock control rod from the lock by pulling the swivel block attached to the lower end of the rod out of the bush.
Remove the closing panel together with the manual control lever from the top of the door.
To remove the control lever from the panel, detach the control rod from the bush in the lever, then remove the screws securing the lever to the panel.

Centralised door locking solenoid and linkage - To fit
To fit the solenoid and linkage reverse the procedure given for removal noting the following points.

Silver Shadow II, Bentley T2 and Silver Wraith II

1. During assembly lubricate the lock control rod pivots with Rocol MTS 1000 grease.
2. After fitting the solenoid and spring link assembly ensure that the door lock is in the locked position and the solenoid in the down position. Adjust the spring link length until the lower rod aligns with the fastex bush in the lever assembly. Tighten the lock-nut on the spring link and connect the rod into the bush.
3. Check that the forces required to lock and unlock the door are the same. If they are not, the spring link is not correctly adjusted and should therefore be re-adjusted and checked again.
4. Check that the doors can be locked and unlocked by operating either centralised door locking switch. When locked both the interior and exterior door handles should be inoperative.

Corniche

1. During assembly lubricate the solenoid-to-lock operating cable with Rocol MTS 1000 grease.
2. After fitting the solenoid and spring link assembly slacken the lock-nut on the spring link to move the lower link of the door lock down to the unlocked position. Move the solenoid link to the open position (i.e. towards the rear of the car). Secure the cable to the lower link of the door lock with the lock-nut. Also, tighten the spring link lock-nut.
3. Check that the forces required to lock and unlock the door are the same. If they are not, the spring link is not correctly adjusted and should therefore be re-adjusted and checked again.
4. Check that the doors can be locked and unlocked by operating either centralised door locking switch. When locked, the exterior door handle should be inoperative. It should be noted that the interior door handle should be operative at all times irrespective of whether the door is locked or unlocked.

Camargue

1. During assembly lubricate the lock control lever pivots with Rocol MTS 1000 grease.
2. Prior to fitting the solenoid to the door, set the solenoid spring link to the 11 68cm. (4.60in.) dimension shown in Figure S14.
3. Prior to fitting the door trim panels, check and adjust the linkage as described previously (see Door lock and linkage - To fit).
4. Check that the doors can be locked and unlocked by operating either centralised door locking lever. When locked both the interior and exterior door handles should be inoperative.

Exterior door handle and Actuator lever assembly - To remove

Silver Shadow II, Bentley T2 and Silver Wraith II

1. Remove the door lock (see Door lock and linkage - To remove).
2. Release the Allen screw and domed nut securing the door handle; remove the handle.
3. Release the two bolts, situated beneath the door handle, securing the lock actuator lever assembly to the door; withdraw the lever through the inner door panel.

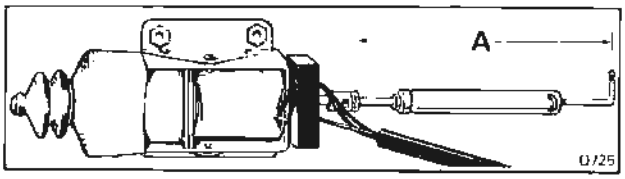

Fig. S14 Centralised door locking solenoid spring link setting (Camargue)

A 11,68cm. (4.60in.)

Corniche

1. Remove the door lock (see Door lock and linkage - To remove).
2. Release the 2BA bolts securing the lock actuator lever assembly to the door; withdraw the lever through the inner door panel.
3. Release the three 2BA bolts and one 4BA bolt securing the door handle. Note the position of the respective distance pieces and washers to ensure correct assembly. Remove the handle.

Camargue

1. Remove the door trim panels and waist rail finisher (see Door trim - To remove).
2. Remove the bolts, nut and washers securing the window lift channel to the top of the door; note the position of any spacing washers to ensure correct assembly.
3. Remove the screws securing the closing panel to the door top then remove the panel.
4. Remove the circlip securing the control link to the private lock lever; remove the link from the lock.
5. Remove the control rod connecting the exterior handle to the cross-shaft lever as follows.

Pull the swivel block attached to the lower end of the control rod from the bush in the cross-shaft lever then, manoeuvre the rod until the cranked upper end is free of the handle.

6. Remove the two nuts and washers securing the exterior handle assembly to the door; remove the handle.

Exterior door handle and Actuator lever assembly - To fit

To fit the exterior door handle and actuator lever assembly reverse the procedure given for removal, noting the following points.

Silver Shadow II, Bentley T2 and Silver Wraith II

1. Apply Bostik cement 1311 or its equivalent to the mating face of the handle to seal it to the moulding. Also apply the Bostik to the moulding to seal it to the door (see Fig. S15). Ensure that the sealant is kept away from the push button stem.
2. The handle push button adjusting screw

Printed in England

© ... Jaguar Cars Limited 1978

August 1978

T.S.D. 4200

should be set so that a clearance of 0,79 mm. (0.031 in.) exists between the head of the screw and the contactor lever before the push button is pressed.

3. Check that when the button is pressed, the lock bolt is triggered off from its fully raised position whilst the outer face of the button is still 1,58 mm. (0.062in.) or more from the handle surround (see Fig. S16).

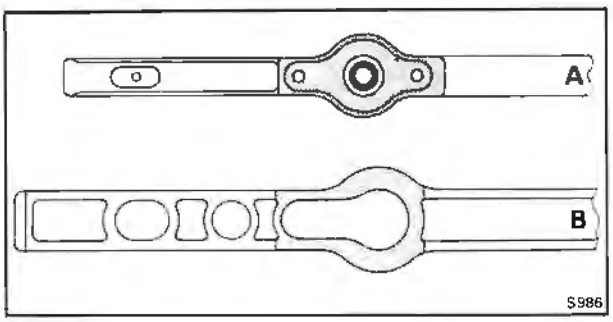

Fig. S15 Location of sealant on exterior door handle and moulding (Silver Shadow II, Bentley T2 and Silver Wraith II)

A Inboard face of door handle
B Inboard face of moulding

Note
Sealant indicated by shaded areas.

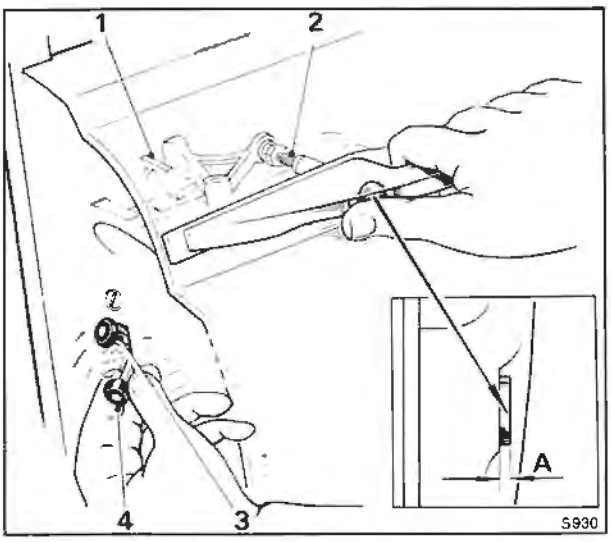

Fig. S16 Exterior door handle adjustment (Silver Shadow II, Bentley T2 and Silver Wraith II)

A 1,59 mm. (0.062 in.) between end of push button and handle surround.
1 Lock contactor lever
2 Push button adjustment screw
3 Lock bolt (position before being 'triggered off' i.e. fully raised)
4 Lock bolt (position after being 'triggered off' i.e. fully down)

Move the lock bolt up and down by hand; check that there is no interference from the lock mechanism. If the lock bolt will not operate without interference, difficulty will be experienced opening and closing the car door.

4. Check that the exterior door handle operates by fully raising the lock bolt, moving the lock control button up (unlock position) and then operate the door handle. Check that the bolt moves down (see Fig. S16).

If the lock is removed from the door, the lock control lever should be moved down and the contactor lever pressed to carry out this check.

Corniche

1. Apply Glasticon sealer to the mating face of the handle.
2. Set the exterior door handle push button. The button should be adjusted so that there is approximately 0,79 mm. (0.031 in.) free movement before the head of the actuator makes contact with the push button. If there is no free movement, the handle should be removed from the door and the required amount ground off the plunger.

Camargue

1. Ensure that the gasket between the handle surround and the door is in good condition; fit a new gasket if necessary.
2. Apply Rocol MTS 1000 grease to the handle pivots and stud threads before fitting the handle to the door.
3. Check that the exterior door handle operates by fully raising the lock bolt, moving the manual lock control lever up (unlock position) and then operate the door handle. Check that the bolt moves down.

Private lock - To remove

Silver Shadow II, Bentley T2, Silver Wraith II and Corniche

1. Remove the door lock (see Door lock and linkage - To remove).
2. Remove the nut securing the private lock to the door; remove the lock together with the weather shield and the collar fitted between the nut and the door.

Camargue

1. Remove the exterior handle and surround from the door (see Exterior door handle and Actuator lever assembly - To remove).
2. Remove the 4BA screw securing the private lock to the handle surround.
3. Remove the private lock, together with the weather shield and spring, from the handle surround.

Private lock - To fit

To fit the private lock reverse the procedure given for removal noting the following points.

Silver Shadow II, Bentley T2, Silver Wraith II and Corniche

1. During assembly, lubricate the private lock

weather shield with Duckhams Keenomax C3 grease or its equivalent.

2. When fitting the private door locks, ensure that the key slot is vertical before finally tightening the lock to the door. Rotating the lock unit after it has been tightened will result in binding when the key is operated.

3. Check the operation of the key locking mechanism as follows.

Fit the door key into the lock, turn the key alternately in opposite directions; check that the lock control button moves to the locked and unlocked positions in sequence with the key movement.

Camargue

1. During assembly, lubricate the private lock weather shield with Duckhams Keenomax C3 grease or its equivalent.

Lubricate the spring and the link rod pivot pins with Rocol MTS 1000 grease.

2. Ensure that the private lock is located centrally in the handle surround before tightening the 4BA locking screw.

3. Check the operation of the key locking mechanism as follows.

Fit the door key into the lock, turn the key alternately in opposite directions; check that the manual lock control lever moves to the locked and unlocked positions in sequence with the key movement.

Front door seals

Door to body seal - To remove
Silver Shadow II, Bentley T2, Silver Wraith II and Camargue

1. Carefully insert a screwdriver under the lip of the seal where the window frame leaves the door and lift the seal from the channel. Avoid damaging the seal channel or paintwork.

2. Remove the seal from the channel.

Corniche

1. Using a scraper or similar tool, carefully remove the seal from around the channel of the door aperture.

On Convertible cars it is necessary to remove the wood finisher under the rear quarter window to enable the rear section of the seal to be removed.

2. Remove the screw securing the upper end of the small seal fitted to the front door pillar. Remove the seal.

Door to body seal - To fit
Silver Shadow II, Bentley T2, Silver Wraith II and Camargue

1. Ensure that the seal channel is clean and free from obstructions.

2. Fit the door seal at the points A, B, C and D shown in Figure S17.

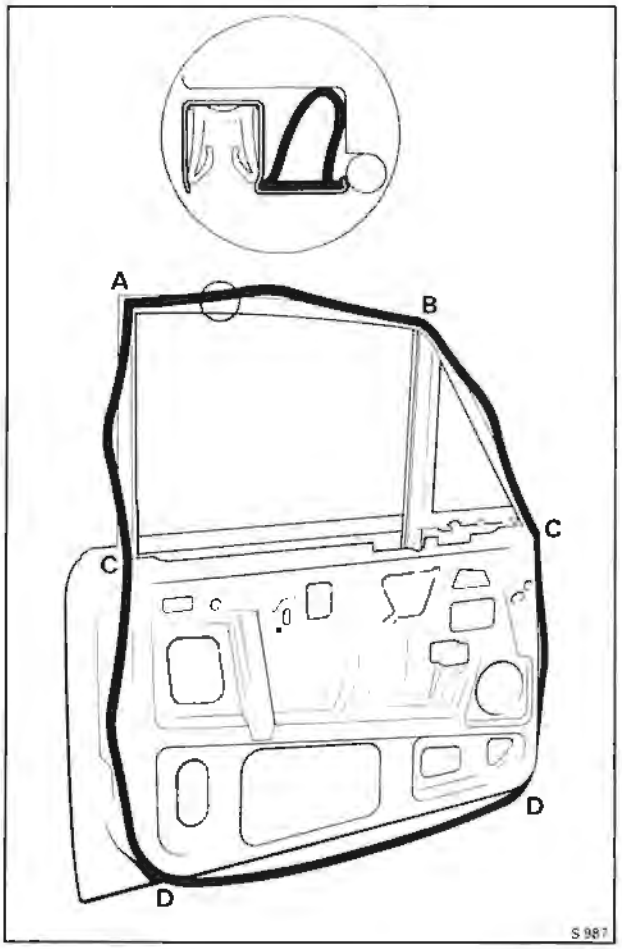

Fig. S17 Fitting the door seal (Silver Shadow II, Bentley T2 and Silver Wraith II)

3. Manoeuvre the seal evenly into the channel as follows.

Locate the seal to the inner part of the door channel, above the points C-C in Figure S17 then, press in the outer edge a short length at a time.

Secondly, locate the seal in the outer part of the door channel, below the points C-C then, press in the inner edge a short length at a time.

A wood or plastic wedge shaped tool with smooth edges will assist during this operation.

Note

When fitting, do not lubricate the seals.

Ensure that the seals are fitted to the correct side i.e. a left-hand seal is fitted to a left-hand door.

On Camargue cars the seals can be fitted to either door.

Corniche

1. Check the seal channel retaining screws for tightness; tighten or replace screws as necessary.

2. Cut the sealing strip to the required lengths noting the following.

On Saloon cars, five pieces of seal are required. Refer to Figure S18 which shows the position and

Printed in England
© Rolls-Royce Motors Limited 1978
August 1978
T.S.D. 4200

type of seal abutment joints required.

On Convertible cars, four pieces of seal are required.

The door, when closed, presses against a seal attached to the forward edge of the rear quarter window frame and also to the seal attached to the wood finisher of the power operated hood (see Fig. S18).

3. Apply Dunlop Adhesive 1127 to the seal channels in the door aperture.
4. Fit the seal sections into the channel; apply Dunlop Adhesive 1127 where one section of the seal abuts another.
5. Remove any surplus adhesive using Bostik Cleaner 6001.

Window channel seals - To remove (see Fig. S19)
Silver Shadow II, Bentley T2, Silver Wraith II and Camargue

1. Remove the window glass (see Electrically operated window glass - To remove).
2. Insert a small screwdriver under the end of the seals and remove the seals from the channel.

Corniche Saloon

1. Remove the window glass and frame (see Electrically operated window glass - To remove).
2. Remove the glass from the frame.
3. Insert a small screwdriver under the end of the seals and remove the seals from the channel.

Corniche Convertible

1. Remove the window glass and glass frame (see Electrically operated window glass - To remove).
2. Insert a small screwdriver under the end of the seals and remove the seals from the channel.

Window channel seal - To fit
All cars

To fit the window channel seal reverse the procedure given for removal, noting the following points.

1. Ensure that the seal channel is clean and free from obstructions.
2. Fit the seal into the channel ensuring that the edge of the seal which has the four protrusions moulded into it is positioned inboard.
3. On Corniche cars ensure that the widest section of the seal is positioned inboard.
4. Fit the glass into the frame checking that the glass moves smoothly up and down the new seal.

Fixed quarter window seals (see Fig. S19)

To remove and fit the fixed quarter window seals refer to Fixed quarter window glass - To remove and fit.

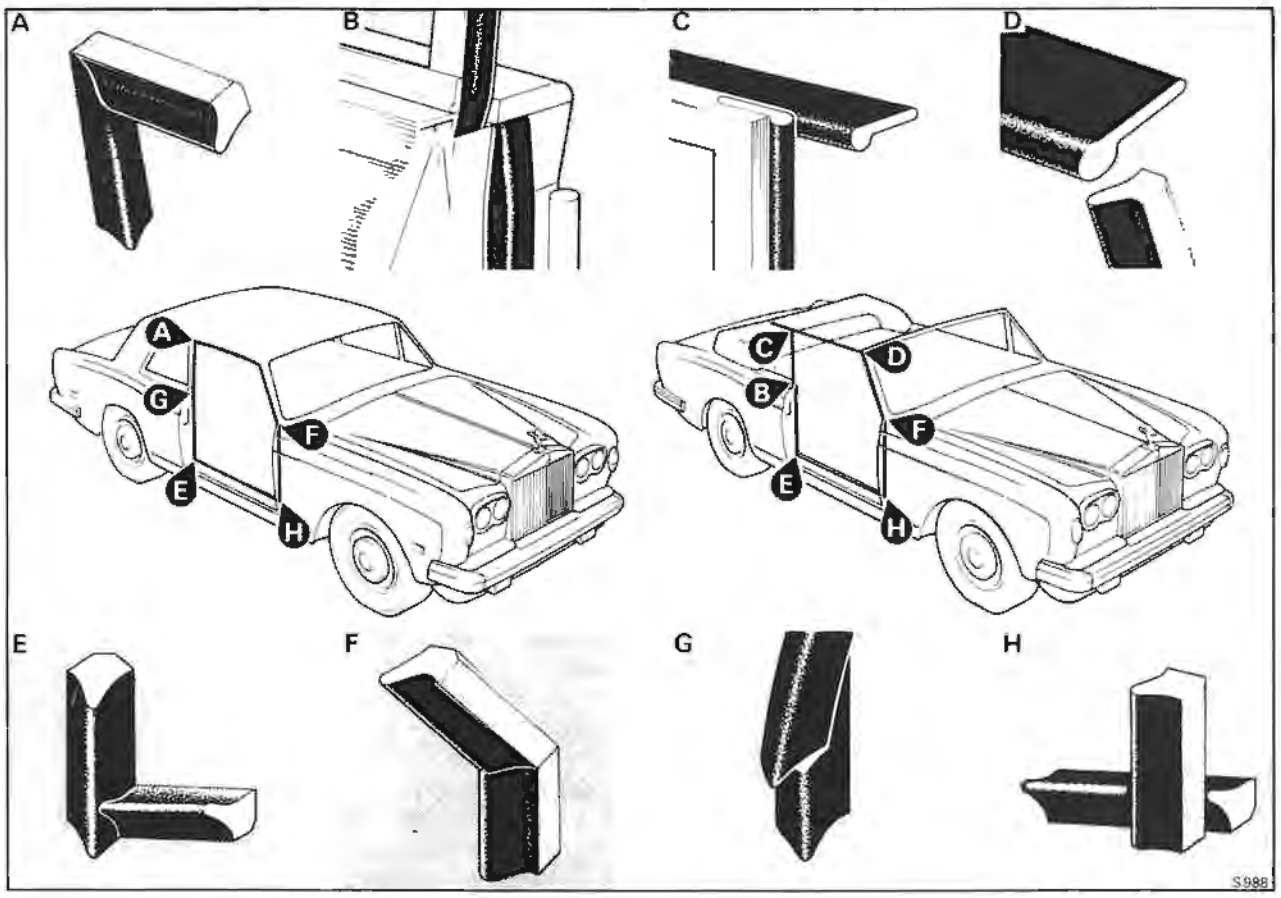

Fig. S18 Fitting the door aperture seal (Corniche Saloon and Convertible)

Door waist rail finisher seals - To remove (see Fig. S19)
Silver Shadow II, Bentley T2 and Silver Wraith II
1. Remove the waist rail finisher assembly (see Door trim - To remove).
2. Remove the sealing felts from the upper and lower outer edge of the finisher (see Fig. S19, items 4 and 5).

With the aid of a small screwdriver and pincers, remove the tacks and staples respectively.

Corniche
1. Remove the waist rail finisher assembly (see Door trim - To remove).
2. Remove the sealing felt from the finisher with a sharp scraper or knife, take care to avoid damage to the wood finisher.

Camargue
1. Remove the waist rail finisher assembly (see Door trim - To remove).
2. Remove the seal from the channel on the finisher with the aid of a small screwdriver; take care to avoid damaging the finisher assembly.

Door waist rail finisher seals - To fit
Silver Shadow II, Bentley T2 and Silver Wraith II
1. Fit the upper sealing felt into position with 0.625in. long tacks.
2. Fit the lower sealing felt into position with a line of staples.
3. Replace the waist rail finisher assembly (see Door trim - To fit).

Corniche
1. Clean any old adhesive from the outer edge of the waist rail finisher with Bostik Cleaner 6001, allow approximately 1 hour for the cleaner to dry.
2. Apply Bostik Adhesive 1261 to the sealing felt and finisher.
3. Allow between 10 and 30 minutes for the adhesive to become 'tacky' then bring the two surfaces together by applying hand pressure.
4. Replace the waist rail finisher assembly (see Door trim - To fit).

Camargue
1. Ensure that the seal retaining channel is clean and free from obstructions and that the channel is fastened securely to the waist rail finisher by the retaining screws.
2. Fit the seal into the retaining channel.
3. Replace the waist rail finisher assembly (see Door trim - To fit).

Door frame reveal strip seal - To remove (see Fig.S19)
Silver Shadow II, Bentley T2, Silver Wraith II and Corniche
1. Remove the door trim and waist rail assembly (see Door trim - To remove).

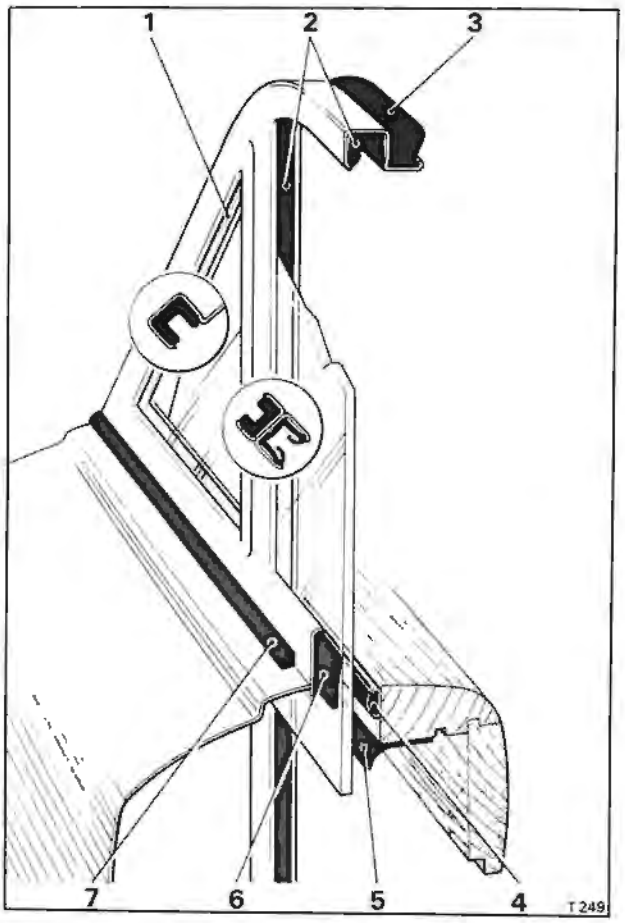

Fig. S19 Door seals
1 Fixed quarter window seal - front section
2 Window channel seal
3 Door to body seal
4 Waist rail finisher seal - upper
5 Waist rail finisher seal - lower
6 Door frame reveal strip seal
7 Seal - frame to door

2. Remove the electrically operated window glass (see Electrically operated window glass - To remove).
3. Using a sharp scraper or knife, remove the seal from the frame; ensure that the window frame is not damaged.

Camargue
1. Remove the door trim and waist rail assembly (see Door trim - To remove).
2. Remove the electrically operated window glass and the fixed quarter window glass.
3. Insert a small screwdriver under one end of the seal and remove the seal from the channel.

Door frame reveal strip seal - To fit
Silver Shadow II, Bentley T2, Silver Wraith II and Corniche
1. Clean the bonding surfaces of the sealing felt and door using Bostik Cleaner 6001; allow approximately 1 hour for the cleaner to dry.

Printed in England
© Rolls-Royce Motors Limited 1978
August 1978
T.S.D. 4200

2. Apply Boscolite Primer 9252 to the door surface; allow approximately 1 hour to dry.
3. Apply Boscoprene Adhesive 2402 (parts 1 and 2) to the bonding surfaces of the door and seal; allow between 10 and 15 minutes for the adhesive to partly dry.
4. Fit the seal to the door; join the two surfaces by applying hand pressure.
5. Replace the window glass, waist rail finisher and door trim.

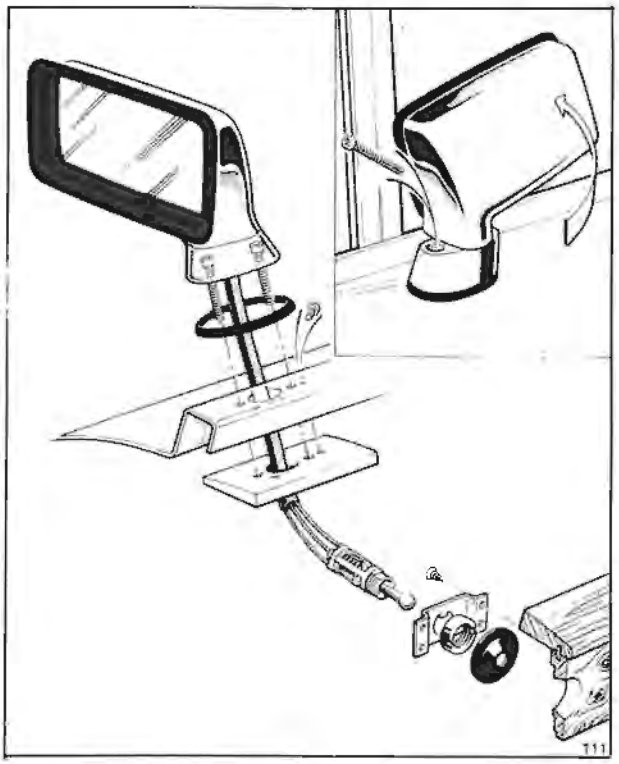

Fig. S20 Exterior door mirror (Silver Shadow II, Bentley T2, Silver Wraith II and Corniche)

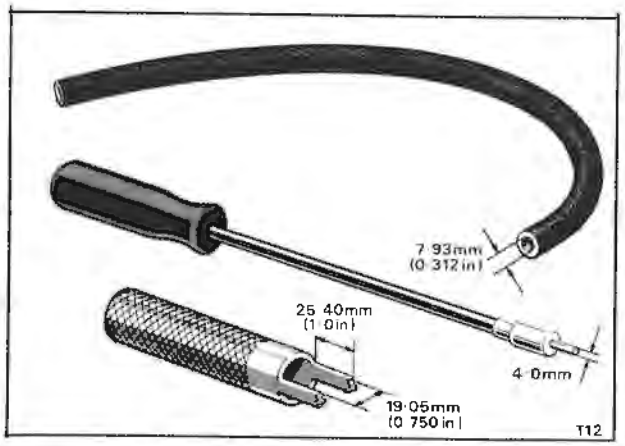

Fig. S21 Exterior door mirror tools (Silver Shadow II, Bentley T2, Silver Wraith II and Corniche)

Camargue
1. Ensure that the seal channels are clean and free from obstructions.
2. Fit the seals into the channels. Fit the seal that abuts the electrically operated window glass so that the shoulder of the seal is uppermost and the lip of the seal is pointing downwards. Fit the seal that abuts the quarter window so that the double lip of the seal is uppermost.
3. Fit the fixed quarter window and the electrically operated window.

Seal - Frame to door - To remove (see Fig. S19)
Silver Shadow II, Bentley T2 and Silver Wraith II
1. Remove the door trim and waist rail assembly (see Door trim - To remove).
2. Remove the window glass (see Electrically operated window glass - To remove).
3. Remove the door frame (see Window frame - To remove).
4. Using a sharp scraper or knife remove the seal from the frame; ensure that the door paintwork is not damaged.

Seal - Frame to door - To fit
Silver Shadow II, Bentley T2 and Silver Wraith II
1. Clean the bonding surfaces of the rubber seal and door using Bostik Cleaner 6001; allow approximately 1 hour for the cleaner to dry.
2. Repeat Operations 2, 3 and 4 from Door frame reveal strip seal - To fit.
3. Replace the window frame, window glass, waist rail finisher and door trim.

Door hinge seals - To remove
Silver Shadow II, Bentley T2 and Silver Wraith II
1. Remove the door trim (see Door trim - To remove)
2. Remove the fasteners retaining the hinge seals to the door.
3. Remove the setscrews from the door hinges; withdraw the door.
4. Withdraw the seals from the hinges.

Corniche
1. Remove the door trim (see Door trim - To remove).
2. Remove the setscrews from the door hinges; withdraw the door.
3. Using a sharp scraper or knife carefully remove the seals from the door.

Camargue
1. Remove the spring clips from the check strap pivot pins.
2. Remove the pivot pins and disconnect the check arms from the hinges.
3. Remove the seals by pulling them over the pivot pin bosses.

Door hinge seals - To fit
All cars
To fit the hinge seals reverse the procedure given for removal noting the following points

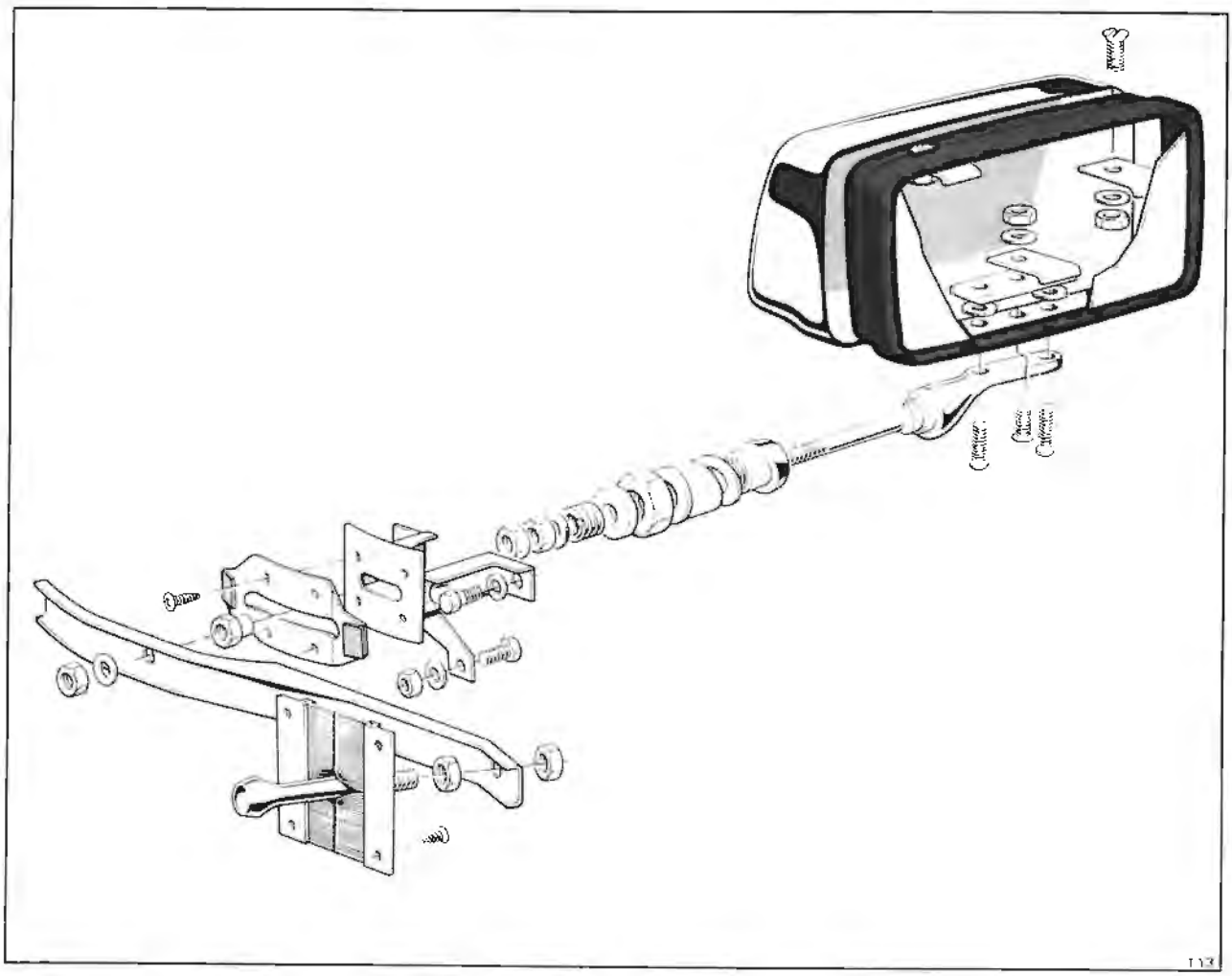

Fig. S22 Exterior door mirror - Camargue (Manually operated)

1. On Corniche and Camargue cars clean the seal seating areas with Bostik Cleaner 6001, allow approximately 1 hour for the cleaner to dry.
2. On Corniche cars attach the seals into position on the door with Bostik Adhesive 1261.

On Camargue cars position the seals on the hinges and secure with Bostik Adhesive 1261.

Exterior door mirror - To remove (see Fig. S20)
Silver Shadow II, Bentley T2, Silver Wraith II and Corniche

1. Remove the rubber bush from around the mirror control knob.
2. Using a socket shaped tool (see Fig. S21) remove the control knob retaining ring by inserting the tool over the control knob and releasing the ring. Carefully manoeuvre the ring through the waist rail finisher.
3. Fit the flexible rubber tubing (see Fig. S21) tightly over the control knob.
4. Turn the mirror head 90° in clockwise and anti-clockwise directions; in each case a 4mm. socket cap screw is visible.
5. Use a right-angled 4mm. Allen key to initially break the seal of the socket cap screws then, using a flexible tool (see Fig. S21), unscrew the socket cap screws.
6. Remove the mirror by threading the cable and the control knob with the rubber tubing attached through the door panels.
7. Remove the tubing from the control knob, leaving the tubing in the door to facilitate assembly.

Camargue
Cars fitted with manually operated door mirror (see Fig. S22)

1. Remove the door trim panels and waist rail finisher (see Door trim - To remove).
2. Remove the two screws securing the mirror head and fairing assembly to the mirror stem; remove the mirror head assembly from the stem.
3. Remove the lock-nut securing the mirror control knob to the operating crank; remove the knob from the crank.
4. Detach the polythene sealing bag from the inner door panel, withdraw the bag from the

Printed in England

© Rolls-Royce Motors Limited 1978

operating crank.
5. Remove the nut and plain washer securing the crank to the operating shaft; remove the crank from the shaft.
6. Withdraw the stepped bush from the slots in the friction spring and bracket. Remove the bush from the shaft.
7. Remove the screws securing the friction spring assembly to the friction bracket and remove the spring.
8. Remove the friction bracket from the door panel by releasing the two setscrews and the 2BA nut and bolt; withdraw the bracket from the shaft and remove from the door.
9. Remove the two lock-nuts and washer securing the mirror stem and shaft assembly to the mounting spigot, slide the spring and spherical spacer off the shaft then remove the shaft assembly from the door.
10. Remove the special nut securing the mounting spigot to the door, remove the spacer from the spigot and remove the spigot from the door. Note the fibre paint protection washer fitted between the mounting spigot face and the door to facilitate correct assembly.

Cars fitted with electrically operated door mirror (see Fig. S23)
1. Ease the rubber protection flap from the side of the mirror base to expose the mirror retaining screw.
2. Turn the retaining screw anti-clockwise sufficiently to ease the mirror head away from the door panel.
3. Disconnect the shrouded plug and socket and withdraw the mirror head.
4. To remove the electrically operated mirror control switch and loom and also to diagnose any electrical fault refer to Chapter M.

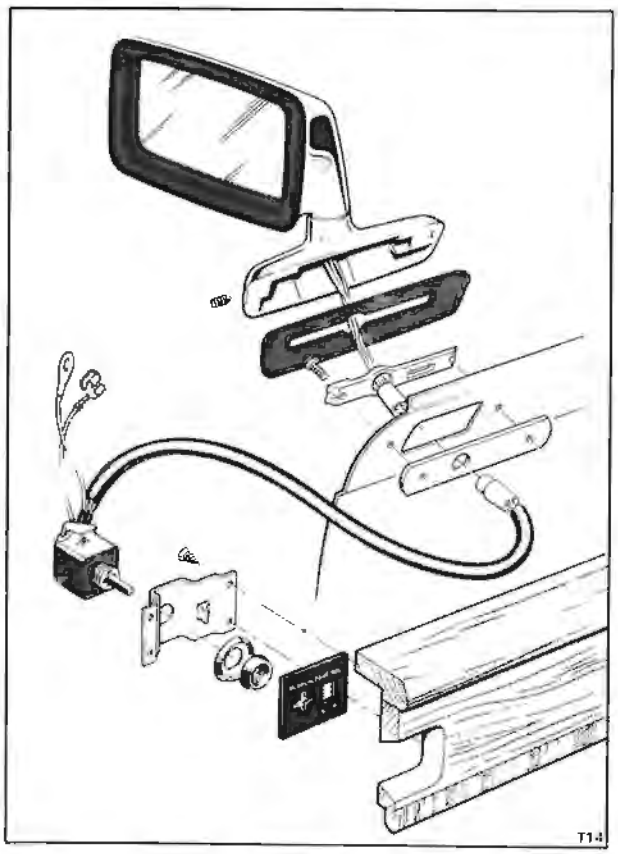

Fig. S23 Exterior door mirror - Camargue (Electrically operated)

Exterior door mirror - To fit
Silver Shadow II, Bentley T2, Silver Wraith II and Corniche (see Fig. S20)
To fit the door mirror reverse the procedure given for removal noting the following points.
1. Tap out the 4mm. holes to ensure that the socket cap screws when fitted do not bind.
2. Apply a thin line of Bostik 771 around the groove in the mirror stem base and fit the seal. Wipe off any excess sealant and allow the surface of the sealant to dry before fitting to the door.
Note
Ensure that the sealant does not come into contact with the paintwork.
3. Attach the end of the rubber tubing, protuding from the door outer panel, over the control knob and carefully pull the knob and cable into the car interior.
4. Apply 242 Nutlock Loctite to the socket cap screws prior to fitting the mirror to the door.
5. Finally tighten the socket cap screws with a 4mm. Allen key.
6. Remove the rubber tubing from the control knob.
7. Carefully thread the retaining ring over the control knob and finger tighten the ring; tighten the ring fully using the socket tool (see Fig. S21).

Camargue
Cars fitted with manually operated door mirror (see Fig. S22)
1. Locate the paint protection washer to the mounting spigot, fit the spigot to the door outer panel and secure with the spacer and special nut.
2. Apply Rocol Anti-scuffing paste to the spherical section of the actuator shaft then locate the mirror stem and shaft assembly into the mounting spigot.
3. Apply Rocol Anti-scuffing paste to the concave face of the spherical washer, then fit the spacer, spring, plain washer and the two lock-nuts to the shaft; ensure that the spherical face of the spacer is located to the spherical seating on the shaft.
4. Ensure that the mirror mounting face on the outboard end of the shaft is in its uppermost position,then, tighten the lock-nuts until the dimension between the spherical washer and the plain washer (i.e. the compressed length of the spring) is approximately 11,8 mm. (0.468 in.); lock the two nuts in this position.
5. Fit the friction unit bracket over the shaft and secure it to the door.
6. Fit the stepped bush onto the shaft. Ensure that

the reduced diameter of the bush is located through the slots in the friction spring and bracket.
7. Fit the crank onto the shaft and align with the friction spring.

Secure the crank to the shaft with the nut and plain washer; torque tighten the nut (see Chapter P).
8. Cut a corner off the polythene sealing bag then thread the bag over the crank. Secure the corner of the bag to the shaft with plastic insulating tape. Draw the ends of the bag through the door inner panel and secure with Dunlop Adhesive S81.
9. Ensure that approximately 9,53 mm. (0.375 in.) length of thread is protruding through the nut on the control knob, then secure the knob to the crank with the lock-nut.
10. Operate the knob and check the mirror shaft for maximum movement. The friction between the crank and the friction spring should be such that a force of 2,72 kg. (6lb.) applied at the knob is required to move it vertically.
11. Ensure that the tabs on the upper inside face of the mirror fairing are located correctly into the holes in the mirror bezel. Fit the mirror and fairing assembly to the stem and secure in position.
12. Fit the door waist rail finisher and door trim (see Door trim - To fit).

Cars fitted with electrically operated door mirror (see Fig. S23)
1. To fit the mirror mounting plates proceed as follows.

Insert the inner mounting plate through the access hole in the outer door panel, align the holes and hold in position.

Fit the external mounting plate, align the holes with the inner plate and secure with two 4 mm. socket cap setscrews.
2. Clip the seal to the mirror base.
3. Connect the shrouded plug and socket.
4. Place the mirror base over the external mounting plate ensuring that the seal sits evenly around the mirror base.
5. Tighten the mirror retaining screw, then cover it with the rubber protection flap.

Rear doors

To remove and fit the rear door components follow a procedure similar to the one described for the front doors noting any variations of procedure described under the following headings.

Door - To remove
1. Disconnect the battery (see Door trim - To remove).
2. Remove the door trim pad.
3. Peel back the black waterproof dust cover.

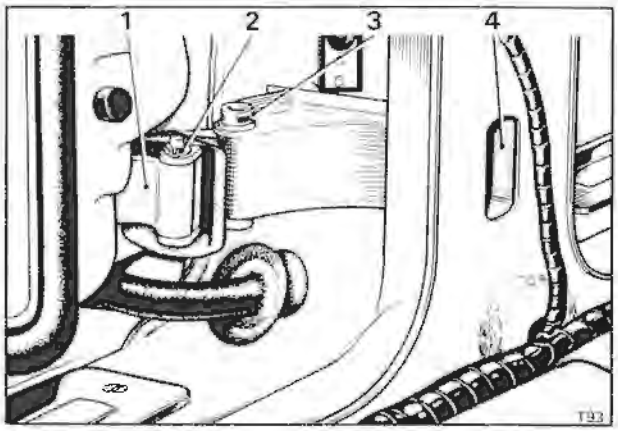

Fig. S24 Lower door hinge
1 Check strap
2 Spring clip
3 Socket headed cap screw
4 Access to hinge securing screws

4. Disconnect the various electrical connections to enable the loom to be withdrawn when removing the door.
5. Remove the spring clip securing the check strap pin to the door linkage (see Fig. S24, item 2).
6. Tap the pin downwards until it clears the hinge.
7. Push the check strap inside the door to gain access to the hinge retaining bolts.
8. Support the door then remove the four setscrews securing each hinge to the door; note the position of the check springs on the lower hinge setscrews to ensure correct assembly. Retain any packing pieces which may be fitted between the door and hinge to ensure correct assembly.
9. Remove the door, carefully withdrawing the door loom.

Door - To fit
To fit the door reverse the procedure given for removal noting the following points.
1. The position of the door in the body aperture is shown in Figure S3.
2. When setting the striker plate ensure that the rear edge of the door is level with the car body.
3. Apply Retinax 'A' grease or its equivalent to the check springs on the lower door hinge.
4. Ensure that the rubber seals are fitted to the hinges before securing the hinges to the door.

Door hinges - To remove from body centre pillar
1. Remove the door (see Door - To remove).
2. Remove the chromed sill finishers from the front and rear door apertures.
3. Fold back the carpet and foam underlay to gain access to the loom protection panel. Release the self-tapping screws and remove the panel.
4. Remove the front seat belt anchorage bolt from the body centre pillar; retain the distance piece and washers.

Printed in England
© Rolls-Royce Motors Limited 1978
August 1978
T.S.D. 4200

5. Using a wedge shaped tool remove the trim pad from the centre pillar.

On Silver Wraith II cars fitted with a centre division, the division has to be removed before access to the centre pillar trim is attained, (see Section S11 Centre division - To remove).

6. Remove the socket headed screw securing the lower hinge to the body bracket (see Fig. S24, item 3).

7. Using an Allen key and extension bar remove the two socket headed screws securing each hinge to the body. Access to the screws is attainable through the recesses in the centre pillar (see Fig. S24, item 4).

Door hinge - To fit to body centre pillar

To fit the rear door hinges reverse the procedure given for removal noting the following point.

1. Secure the upper hinge seal to the door by following the procedure described in Door frame reveal strip seal - To fit, Silver Shadow II, Bentley T2, Silver Wraith II and Corniche items 1 to 4 inclusive.

Door trim - To remove

1. Slacken the two setscrews securing the arm rest to the door sufficient to slide the arm rest upwards until free of the setscrews. Remove the arm rest and then the setscrews; retain the washers and distance pieces.

Access to the setscrews is gained through the bottom of the arm rest.

2. Remove the escutcheon covers and the escutcheons from around the window switch and interior door handle (see Door trim - To remove, Front door section).

3. Ease the trim pad from the door sufficient to disconnect the electrical leads of the step lamp and cigar lighter. Note the respective colours of the leads to ensure correct assembly.

4. Remove the remaining trim in a similar manner to that described in Door trim - To remove, Front door section.

Door trim - To fit

To fit the door trim reverse the procedure given for removal noting the following points.

1. Before fitting the trim pad ensure that any loose debris is removed from the bottom of the door.

2. Ensure that the following method of fitting the lock control button is used.

Insert the lock control rod through the bush in the waist rail finisher, thread the lock-nut onto the control rod then screw the rod into the upper solenoid rod. Adjust the lock-nut until the height of the lock control button when depressed is 12,70mm. (0.50in.) from the finisher to the head of the button (see Fig. S7).

3. Check that all switches and interior door handles are functioning correctly.

Electric window lift mechanism
Electrically operated window glass
Window frame

To remove and fit the above components follow a similar procedure to the ones described in the front door section on Silver Shadow II, Bentley T2 and Silver Wraith II cars. Note that reference should also be made to Door trim - To remove and fit and Door lock and linkage - To remove and fit, both in the rear door section.

Fixed quarter window glass - To remove

1. Remove the window frame.

2. Remove the support plate and lower seal from under the quarter window.

3. Withdraw the quarter window glass from the frame.

4. Remove the three remaining sections of the seal from the frame.

Fixed quarter window glass - To fit

To fit the fixed quarter window reverse the procedure given for removal noting the following points.

1. Prior to fitting the seals, ensure that the channels are clean and free from obstructions.

2. Fit the front, rear and top seals into the frame. Ensure that the seals are fitted with the edge of each seal having the four protrusions moulded into it is positioned inboard

Door lock and linkage - To remove (see Fig. S25)

1. Disconnect the battery.

2. Remove the door trim and waist rail finisher (see Door trim - To remove).

3. Repeat Operations 3 to 7 inclusive from Door lock and linkage - To remove in the front door section.

4. Support the lock. Remove the countersunk headed screws and cup washers securing the lock to the rear edge of the door; remove the lock.

5. Using a similar procedure to that shown in Figure S12, press the pivot lever assembly towards the inner door panel until the outer end of the lever spindle is free from its nylon bush; remove the bush. Push the free end of the lever spindle into the hole vacated by the bush until the other end of the spindle is also free from its bush; remove the pivot lever assembly.

6. Remove the interior door handle and disconnect the remote control rod.

Door lock mechanism - To check

1. Follow the same procedure as that described in Door lock mechanism - To check, Operations 1 to 7 inclusive in the front door section.

2. Raise the lock bolt to the half-way position, then repeat Operations 4 to 7 inclusive from Door lock mechanism - To check, in the front door section.

Door lock and linkage - To fit

To fit the door lock and linkage reverse the procedure given for removal noting the following points.

1. During assembly lubricate the pivot points and contact faces of the exterior door handle, the contactor lever assembly and all lock linkage pivot pins with Rocol MTS 1000 grease.

2. Repeat Operation 2 from Door lock and linkage - To fit, in the front door section.

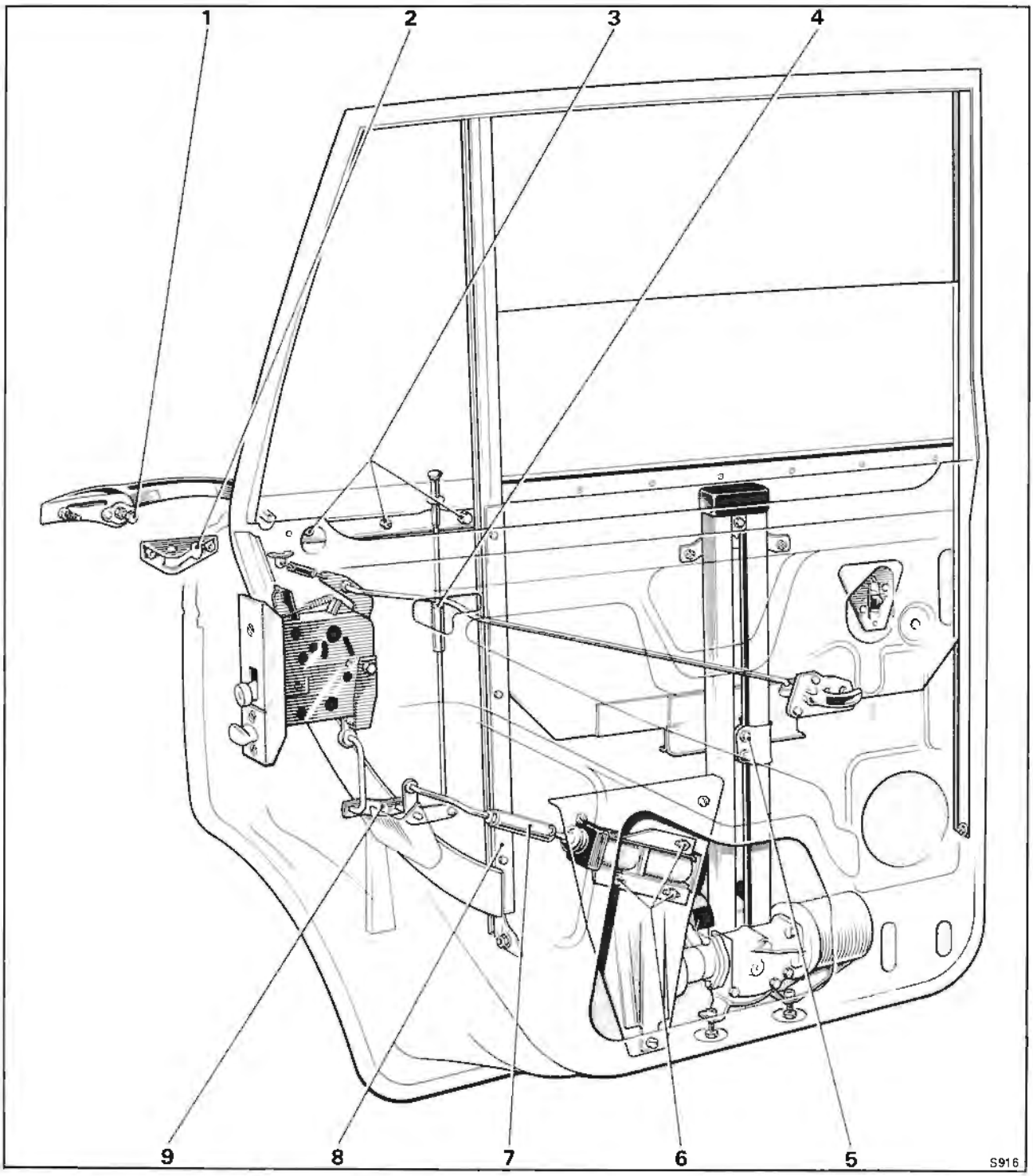

Fig. S25 Construction of a rear door

1 Push button adjustment screw
2 Actuator lever assembly
3 Lower quarter window seal support plate screws
4 Lock-nut, lock control button adjustment
5 Setscrew - window support bracket to chain channel slider
6 Solenoid adjusting screws
7 Solenoid spring link
8 Closing plate - window frame channel
9 Pivot lever assembly

Printed in England
© Rolls-Royce Motors Limited 1978

Centralised door locking solenoid and linkage - To remove
1. Disconnect the battery.
2. Remove the door trim (see Door trim - To remove).
3. Disconnect the electrical leads to the solenoid at the Lucar connections; note the colour code of the leads to ensure correct assembly.
4. Remove the three screws, washers and nuts securing the solenoid mounting bracket to the door; note the position of the spacing washer.
5. Disconnect the spring link rod from the pivot lever.
6. Remove the solenoid and mounting bracket assembly from the door.
7. Remove the control rods from the pivot lever assembly then, using a similar procedure to that shown in Figure S12, press the pivot lever assembly towards the inner door panel until the outer end of the lever spindle is free from its nylon bush; remove the bush. Push the free end of the lever spindle into the hole vacated by the bush until the other end of the spindle is also free from its bush; remove the pivot lever assembly.

Centralised door locking solenoid and linkage - To fit
To fit the solenoid and linkage reverse the procedure given for removal noting the following points.
1. During assembly lubricate the lock control rod pivots with Rocol MTS 1000 grease.
2. Fit the bracket and solenoid assembly inside the door, connect the spring link of the solenoid to the pivot lever then, secure the assembly to the door panel; ensure that the spacing washer is fitted to the upper forward screw, between the bracket and the door inner panel.
3. Adjust the solenoid by slackening the 2BA nut and bolt and the two setscrews securing the solenoid to the bracket (see Fig. S25). Slide the solenoid along the slots until the spring link is balanced (i.e. until any free play is removed, but tension is not applied to the spring link). Adjustment should **not** be made at the spring link.
4. Check that the force required to raise or lower the lock control button is the same in both directions; if not, slacken the 2BA bolt and the two setscrews and adjust the solenoid in the slots until this condition is obtained.

Exterior door handle and Actuator lever assembly
To remove and fit the exterior door handle and actuator lever assembly follow the same procedure as that described in the front door section.

Rear door seals

Door to body seal
Window channel seal
Door waist rail finisher seal
Door frame reveal strip seal
Seal - Frame to door
To remove and fit the above components follow the same procedure as that described for the same components in the front door section.

Fixed quarter window seals
To remove and fit the fixed quarter window seals refer to Fixed quarter window glass - To remove and fit.

Door hinge seals - To remove
1. Remove the door trim (see Door trim - To remove).
2. From within the door, remove the setscrews from the door hinges; withdraw the door.
3. Withdraw the seal from the lower hinge.
4. Using a scraper or knife remove the upper seal from the door.

Door hinge seals - To fit
To fit the hinge seals reverse the procedure given for removal noting the following points.
1. Clean the seal mating areas of the upper door seal with Bostik Cleaner 6001; allow approximately 1 hour to dry.
2. Apply Boscolite Primer 9252 to the door surface to which the seal is to be fitted; allow approximately 1 hour to dry.
3. Apply Boscoprene Adhesive 2402 (parts 1 and 2) to the bonding surfaces of the door and seal; allow 10 to 15 minutes for the adhesive to partly dry.
4. Fit the seal to the door bringing the two surfaces together using hand pressure.

Printed in England
© Rolls-Royce Motors Limited 1978
August 1979
T.S.D. 4200

Section S2

Bonnet

Bonnet - To remove

1. Raise the bonnet.
2. Disconnect the battery.
3. Disconnect the bonnet lamp leads at the connections adjacent to the right-hand bonnet hinge. Note the colour and position of the leads to ensure correct assembly.
4. Release the clips securing the bonnet lamp loom to the right-hand hinge assembly.
5. Remove the bolt securing the bonding strip to the front end of the bonnet.
6. Scribe correlation marks around the washers of the setscrews securing the bonnet to the hinges.
7. With the help of an assistant remove the four setscrews and washers securing the bonnet to each hinge; remove the bonnet.

Bonnet - To fit

To fit the bonnet, reverse the procedure given for removal noting the following points.

1. Before tightening the bonnet securing screws, align the correlation marks made during removal.
2. After fitting the bonnet, check the bonnet to body clearances (see Fig. S26). If necessary, slacken the securing bolts and move the bonnet until the correct clearances are obtained, then tighten the bolts.
3. Check that the bonnet can be opened and closed without difficulty. If necessary, adjust the position of the bonnet catch plates as follows.

Slacken the setscrews securing the two catch plates to the bonnet until they are just finger tight. Adjust the position of each plate until the bonnet can be opened and closed without difficulty, then fully tighten the securing screws.

4. On cars destined for U.S.A. and Canada, ensure that the protrusions on the bonnet retention brackets align with their respective holes in the brackets situated on the rear wall of the engine compartment.

Bonnet hinges - To remove

1. Remove the bonnet.
2. Remove the radiator matrix (see Chapter L, Engine cooling system).
3. Using a hooked piece of strong wire, remove the large coil spring from each hinge.
4. Disconnect the bonnet lamp switch electrical leads, situated adjacent to the right-hand hinge. Note the position and colour of the leads to ensure correct assembly.
5. Remove the setscrews and washers securing each hinge to the front wall of the engine compartment; remove the hinges.

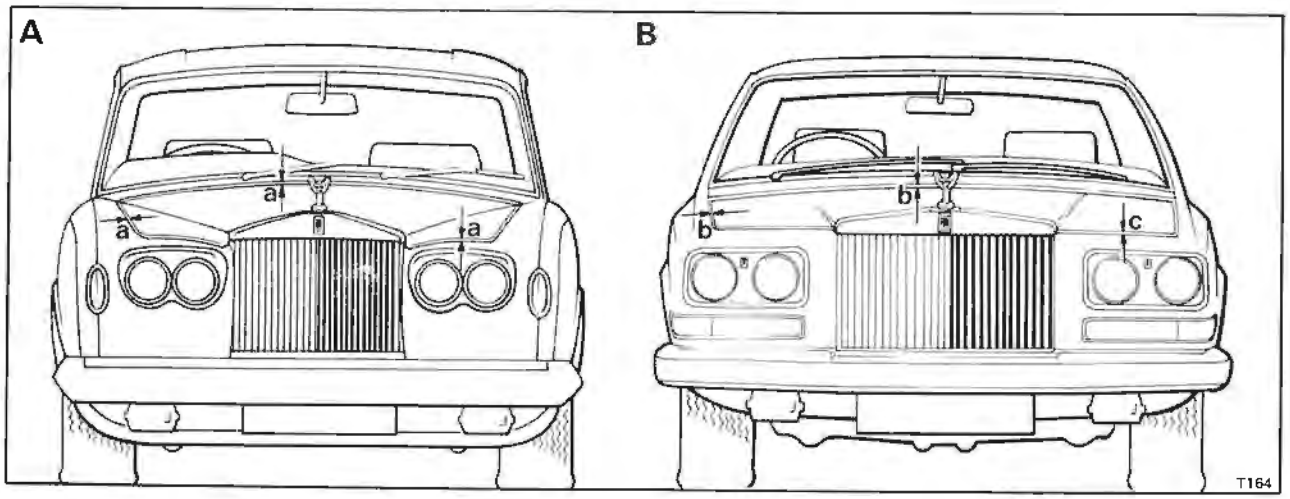

Fig. S26 Bonnet clearances

A Silver Shadow II, Bentley T2, Silver Wraith II, and Corniche

a 3,57 mm. (0.140in.) Silver Shadow II, Bentley T2 and Silver Wraith II
2,38 mm. (0.093in.) Corniche

B Camargue

b 4,25 mm. to 4,75 mm. (0.167 in. to 0.188 in.)

c 3,25 mm. to 3,75 mm. (0.127 in. to 0.147 in.)

Bonnet hinges - To fit

To fit the hinges reverse the procedure given for removal noting the following point.

1. Before fully tightening the setscrews securing the bonnet to the hinges ensure that the bonnet to body clearances are satisfactory (see Fig. S26) Also ensure that the bonnet will open and close satisfactorily (see Bonnet - To fit).

Bonnet catch mechanism - To remove

1. Scribe the profile of the bonnet catch mounting brackets onto their adjacent guide plates (see the broken line between items 2 and 3 in Fig. S27).
2. Remove the toggle spring from each end of the countershaft.
3. Remove the setscrews and washers securing the guide plates to the mounting brackets.
4. Remove the guide plates from the countershaft.

Note

Unless it is necessary to remove the countershaft completely from the car it is recommended that it is left attached to the operating wire and secured to one side.

If the countershaft is disconnected from the wire a new wire will be required. Also, when fitting the operating mechanism, if the bonnet is closed prior to the wire being connected it may be difficult to open the bonnet.

If it is required to disconnect the wire from the countershaft proceed as follows.

Bonnet catch operating wire - To remove

1. Using pliers, straighten the end of the wire protruding from the nipple on the countershaft lever.
2. Slacken the socket headed grub screw located in the nipple and withdraw the wire from the nipple.

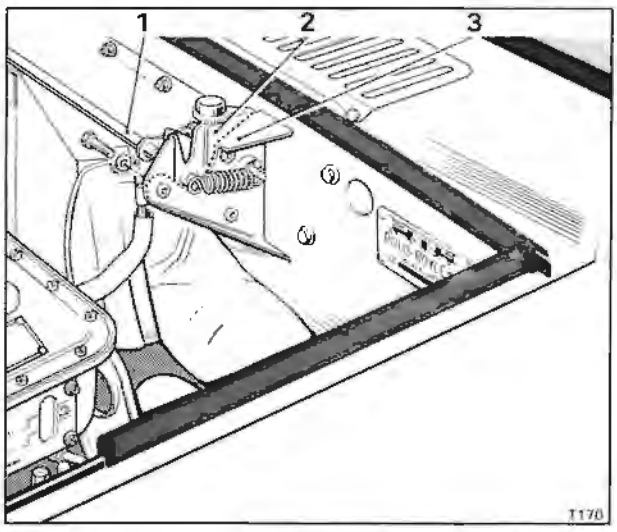

Fig. S27 Bonnet catch mechanism

1 Countershaft
2 Guide plate
3 Mounting bracket

Remove the nipple and washer from the countershaft lever.

3. On Silver Shadow II, Bentley T2, Silver Wraith II and Corniche cars remove the lower trim surrounding the bonnet release handle, parking brake, etc. (see Section S10 - Interior trim).

On Camargue cars remove the driver's side knee trim panel and the small trim panel from around the parking brake lever (see Section S10 - Interior trim).

4. Remove the bonnet wire from the operating lever by 'springing' the looped end of the wire over the collar of the retaining boss, then withdraw the wire from the outer sheath cable.
5. On Silver Shadow II, Bentley T2, Silver Wraith II and Corniche cars if difficulty is experienced in withdrawing the straightened end of the wire through the outer sheath cable, remove the nut and bolt securing the cable to the instrument board support bracket and withdraw the wire, cable and cable clip.

On Camargue cars if it is necessary to remove the outer sheath cable remove the nut and bolt securing the cable to the bulkhead bracket in the rear of the engine compartment, then withdraw the cable from the bulkhead.

Bonnet catch operating wire - To fit

1. Ensure that the bonnet catch operating lever situated below the facia pivots freely. Also ensure that it returns to its stop by means of the return spring.
2. Fit the outer sheath cable (if removed). Lightly smear the wire with Rocol MTS 1000 grease or its equivalent then thread the new wire through the outer cable.
3. Fit the looped end of the wire onto the operating lever retaining boss.
4. Move the countershaft to the bonnet locked position.
5. Position a 6,35 mm. (0.250 in.) diameter bar in the guide plate and countershaft locking cam adjacent to the wire.

Refer to Figure S28 which shows the setting bar in position on a right-hand drive car. On left-hand drive cars, position the setting bar at the opposite end of the countershaft.

6. Fit the wire nipple and washer to the lever on the countershaft then thread the free end of the wire through the nipple.
7. Tighten the nipple so that, with the cam fully closed on the setting bar, there is approximately 3,2 mm. (0.125 in.) of free movement between the lever when resting on its rubber stop and when it starts to open the cam (see Fig. S28).
8. When the wire is set, bend the free end of the wire which protrudes through the nipple (see Fig. S28).
9. Remove the setting bar and operate the bonnet release lever Check that the countershaft moves to the unlocked position assisted by the toggle springs, and that the operating lever returns to its stop when released.

10. Close the bonnet and check that the operating cams on the countershaft are fully engaging the bonnet catch plates. If necessary reset the catch plates.

Bonnet catch mechanism - To fit
To fit the bonnet catch mechanism reverse the procedure given for removal noting the following points.
1. If the operating wire is disconnected from the countershaft, **do not** attempt to close the bonnet until the wire has been fitted and set (see Bonnet catch operating wire - To fit).
Failure to observe this procedure could result in the bonnet becoming locked.
2. Ensure that when the bonnet is closed, the pegs on the bonnet catch plates locate correctly in the rubber bushes fitted to the countershaft guide plates.
3. If necessary, reposition the bonnet catch plates so that the bonnet will open and close without difficulty (see Bonnet - To fit, Operation 3).

Bonnet seals - To remove
1. Remove the seals from the rear and rear sides of the flange surrounding the engine compartment. If a knife or similar tool is used, care must be taken to avoid damaging the paintwork.
2. Remove the small seals from the front and sides of the bonnet flange.

Bonnet seals - To fit
1. Clean the seating area of the rear flange with Bostik Cleaner 6001; allow approximately 1 hour to dry.
2. Apply Dunlop Adhesive S1127 to the seal and bonnet flanges, allow the adhesive to become 'tacky' before bringing the two surfaces together using maximum hand pressure.
3. Press the small seals into position around the front and sides of the bonnet flange.

Bonnet pads - To remove
1. Remove the bonnet pads by carefully levering the drive fastening clips from around the circumference of each pad.
On Silver Shadow II, Bentley T2, Silver Wraith II and Corniche cars destined for Australia, Canada, Japan and U.S.A. remove the bonnet pad protection plate situated in the rear centre pad. The plate is secured by two domed nuts.

Bonnet pads - To fit
To fit the bonnet pads reverse the procedure given for removal.

Bonnet moulding - To remove
Silver Shadow II, Bentley T2, Silver Wraith II and Corniche
1. Remove the 4BA nut retaining the front end of the bonnet moulding.
2. Carefully lever the moulding away from the bonnet by releasing each of the five retaining clips situated along the length of the moulding.
3. Remove the moulding, lifting the 4BA retaining bolt at the front end clear of the bonnet.
Note
On cars destined for Australia, Canada, Japan and U.S.A. two 4BA nuts and bolts retain the moulding, together with the five clips.

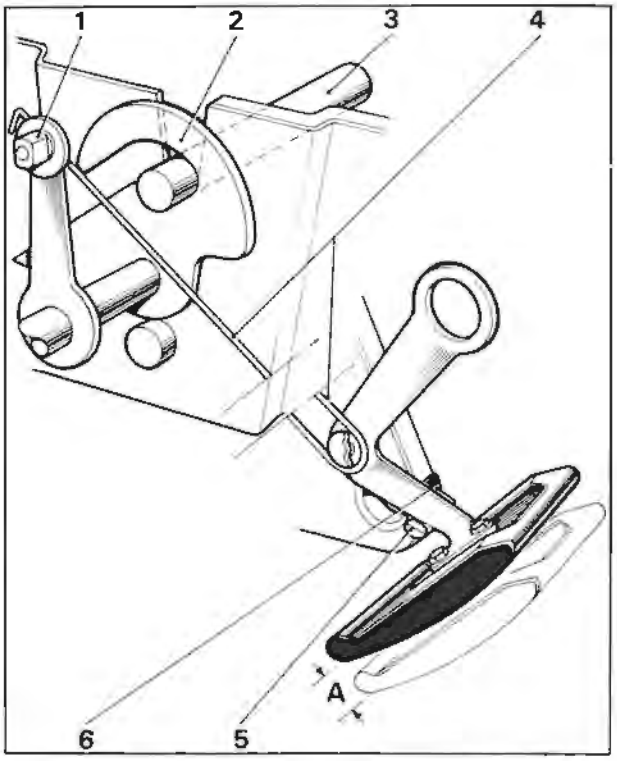

Fig. S2B Setting the bonnet catch operating mechanism
A 3,20 mm. (0.125 in.) free movement.
1 Wire nipple
2 Locking cam
3 Setting bar
4 Operating wire
5 Stop on operating lever
6 Rubber stop on pivot bracket

Bonnet moulding - To fit
To fit the bonnet moulding reverse the procedure given for removal noting the following point.
Silver Shadow II, Bentley T2, Silver Wraith II and Corniche
1. Space out the retaining clips along the length of the moulding, locate the 4BA bolt(s) into its access hole, then press each retaining clip in turn into position before fitting the retaining nuts.

Printed in England
© Rolls-Royce Motors Limited 1978

Section S3

Luggage compartment lid
Contents

	Page
Removing and fitting the lid	S3 - 3
Hinges	S3 - 3
Lid lock mechanism, handle and solenoids	S3 - 6
Solenoids and operating rods	S3 - 9
Solenoids and connecting link (Corniche)	S3 - 9
Solenoids and operating rods (Corniche)	S3 - 10
Solenoids and operating rods (Camargue)	S3 - 10
Actuating mechanism (Camargue)	S3 - 10
Private lock mechanism	S3 - 10
Lid seals	S3 - 11

Printed in England
© Rolls-Royce Motors Limited 1978
November 1978
T.S.D. 4200

Section S3

Luggage compartment lid

Printed in England
© Rolls-Royce Motors Limited 1978

Luggage compartment lid - To remove
Silver Shadow II, Bentley T2 and Silver Wraith II

1. Disconnect the battery.
2. Remove the two screws securing the luggage compartment lamp surround; remove the surround together with the lamp lens.
3. Remove the four screws securing the bulb holder, withdraw the holder sufficiently to disconnect the electrical leads. Remove the holder and retain the leads in position.
4. Remove the two screws retaining the access cover over the actuating mechanism and solenoids; remove the cover.
5. Disconnect the electrical leads from the solenoids at the junction block.
6. On cars destined for U.S.A. and Canada, carefully separate the carpet trim from the luggage compartment lid sufficiently to gain access to the snap connectors of the rear number plate lamp leads; disconnect the connectors.
7. Separate the carpet trim from the lid, midway along the left-hand side edge, to gain access to the self-tapping screw securing the black earth wires to the lid; remove the earth wires.
8. Tie a piece of string or wire approximately 1,5 metres (5.0 ft.) long to the disconnected leads. Withdraw the electrical loom from the lid until only the string or wire remains in the lid then remove the leads.

   The string or wire should be left in the lid to facilitate the refitting of the loom.
9. Scribe correlation marks around the washers of the six setscrews securing the lid to the two hinges; remove the setscrews.

   Two assistants will be required to support the lid as the setscrews are removed.
10. Remove the luggage compartment lid.

    To facilitate assembly, note the number of shims fitted between each hinge and the luggage compartment lid.

Corniche

1. Disconnect the battery.
2. Remove the trim covering the hinges and luggage compartment lamp by releasing the screws adjacent to the hinges.
3. Disconnect the snap connectors attaching the luggage compartment lid loom to the body loom.
4. Remove the hinge trim covers by releasing the self-tapping screws securing the covers to the inside front face of the luggage compartment lid.
5. Repeat Operations 9 and 10 from Luggage compartment lid - To remove, Silver Shadow II, Bentley T2 and Silver Wraith II.

Camargue

1. Disconnect the battery.
2. Remove the six self-tapping screws securing the lock trim cover; remove the cover.
3. Remove the self-tapping screws securing the carpet trim to the lid; remove the trim.
4. Remove the two Pozidriv screws securing each of the two rear number plate lamps to the lid.

   Withdraw the lamps sufficiently to gain access to the electrical leads, disconnect the leads at the Lucar connections and remove the lamps.

   Note the colour code of the leads to ensure correct assembly.
5. Disconnect the electrical leads to the luggage compartment lock solenoids at the junction block.
6. Repeat Operations 8, 9 and 10 from Luggage compartment lid - To remove, Silver Shadow II, Bentley T2 and Silver Wraith II.

Luggage compartment lid - To fit
All cars

To fit the luggage compartment lid reverse the procedure given for removal noting the following points.

1. Before tightening the setscrews securing the lid to the hinges, align the correlation marks made during removal.
2. Prior to fitting the hinge trim covers or carpet trim, check the lid to body clearances as shown in Figures S29, S30 and S31. If necessary, slacken the six setscrews and move the lid until the clearances are correct then tighten the setscrews.
3. Check that the lid can be opened and closed without difficulty (see Luggage compartment lid lock mechanism, handle and solenoids - To fit, Operation 7).
4. When fitted correctly, the contour of the lid should match perfectly with the contour of the body.

Luggage compartment lid hinges - To remove
Silver Shadow II, Bentley T2, Silver Wraith II and Camargue

1. Remove the luggage compartment lid.
2. Remove the carpet trim from around the hinges and torsion rods by releasing the press studs.

   On Silver Wraith II cars fitted with a centre division remove the self-tapping screws securing the trim panel in the forward section of the luggage compartment; remove the panel.

November 1978
T.S.D. 4200

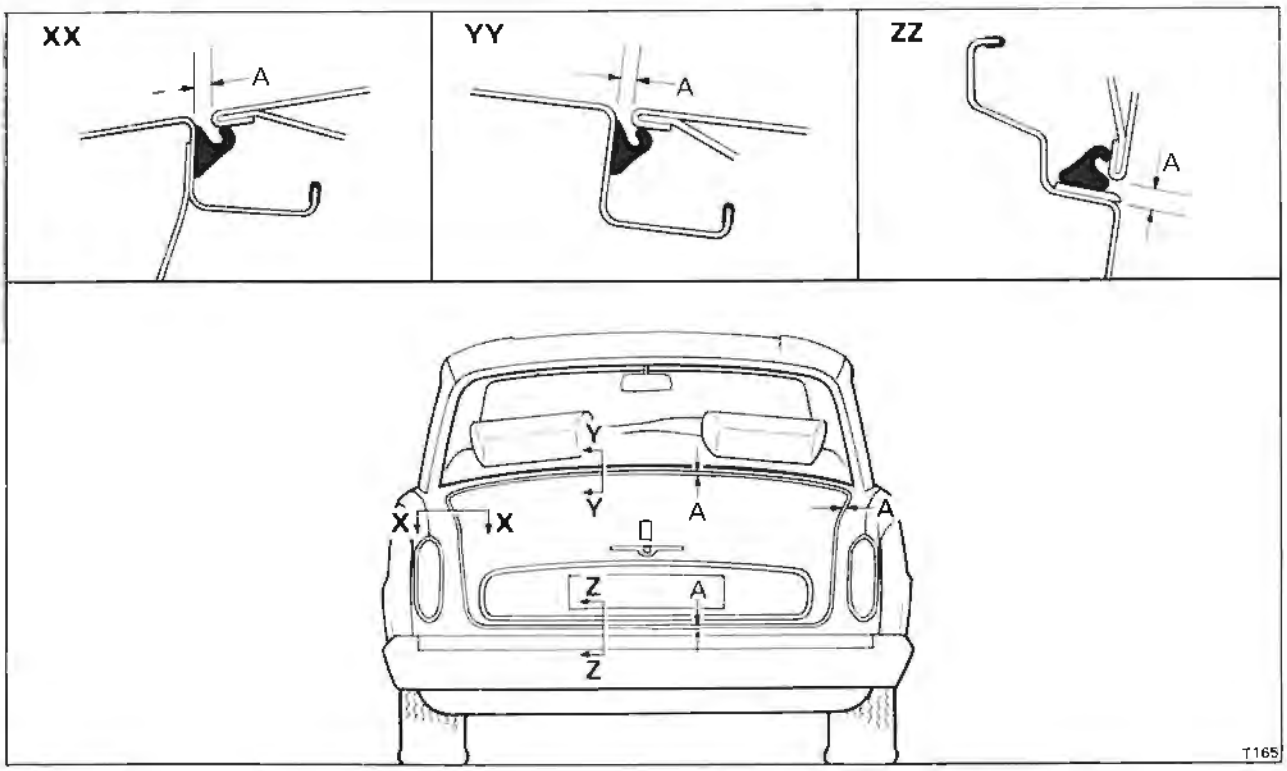

Fig. S29 Luggage compartment lid clearances (Silver Shadow II, Bentley T2 and Silver Wraith II)
A 6,35 mm. (0.250 in.)

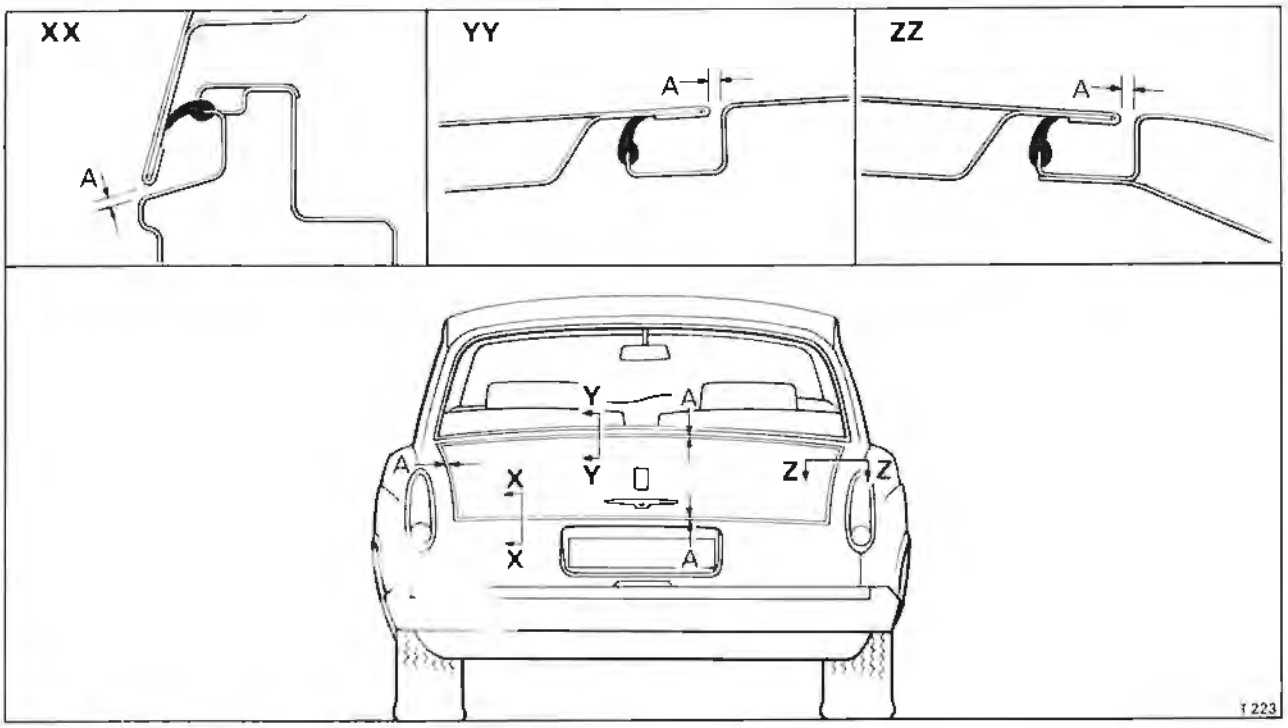

Fig. S30 Luggage compartment lid clearances (Corniche)
A 2,38 mm. (0.093 in.)

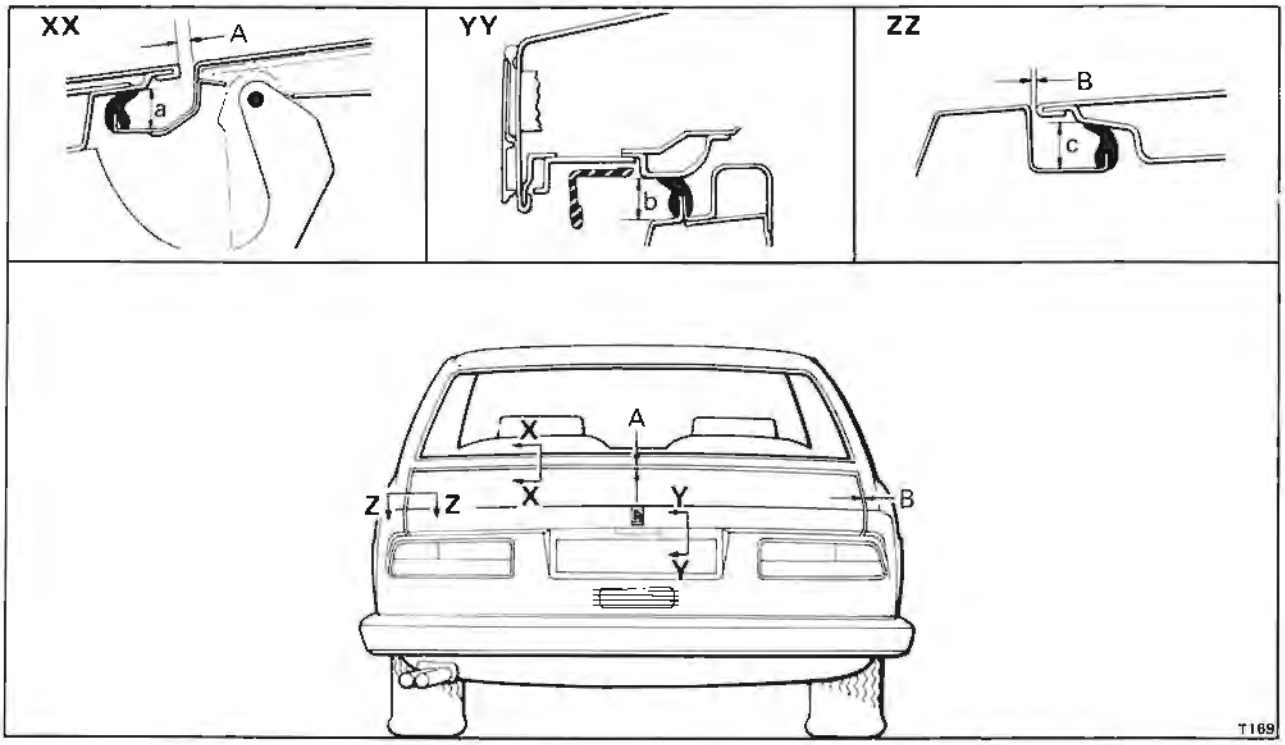

Fig. S31 Luggage compartment lid clearances (Camargue)

A 4,60 mm. to 5,40 mm. (0.181 in. to 0.212 in.)
B 3,20 mm. to 4,0 mm. (0.125 in. to 0.157 in.)
a 18,60 mm. to 19,40 mm. (0.732 in. to 0.763 in.)
b 19,0 mm. to 19,80 mm. (0.748 in. to 0.779 in.)
c 18,60 mm. to 19,40 mm. (0.732 in. to 0.763 in.)

On cars destined for U.S.A. and Canada, remove the trim panel covering the lid hinges and the fuel tank by releasing the screws situated across the centre and bottom of the panel. Also, remove the trim panel crossmember by removing the screws shown in Figure S32, item 2.

3. Remove the screws securing the clips for the lid electrical loom to the left-hand hinge.
4. Disconnect the leads to the luggage compartment lamp switch at the snap connectors; the switch is secured to the right-hand hinge.
5. Remove the hinges and torsion rods by releasing the four setscrews securing each hinge to the car body.

Corniche

1. Remove the luggage compartment lid.
2. Remove the screws securing the cover of the luggage compartment lamp; remove the cover. Remove the screws securing the lamp unit, disconnect the leads and remove the lamp.
3. On Saloon cars remove the trim panel covering the hinges by releasing the four screws adjacent to each hinge.

On Convertible cars remove the three trim panels covering the hinges by releasing the screws.
4. On cars destined for U.S.A. and Canada, remove the trim panel covering the lid hinges and the fuel tank by releasing the screws across the centre and bottom of the panel.
5. On Convertible cars remove the six 2BA bolts securing the two inner triangular shaped hinge brackets to the body. Disconnect the electrical loom running through the two brackets at the terminal block then, withdraw the loom from the brackets.
6. Repeat Operations 3, 4 and 5 from Luggage compartment lid hinges - To remove, Silver Shadow II, Bentley T2, Silver Wraith II and Camargue.

Luggage compartment lid hinges - To fit

All cars

To fit the hinges reverse the procedure given for removal noting the following points.
1. Before tightening the setscrews securing the lid to the hinges, the lid must be set in relation to the body (see Figs. S29, S30 and S31).
2. Before fitting the hinge trim covers, check that the hinge torsion rod adjusting screws are set

Printed in England
© Rolls-Royce Motors Limited 1978
November 1978
T.S.D. 4200

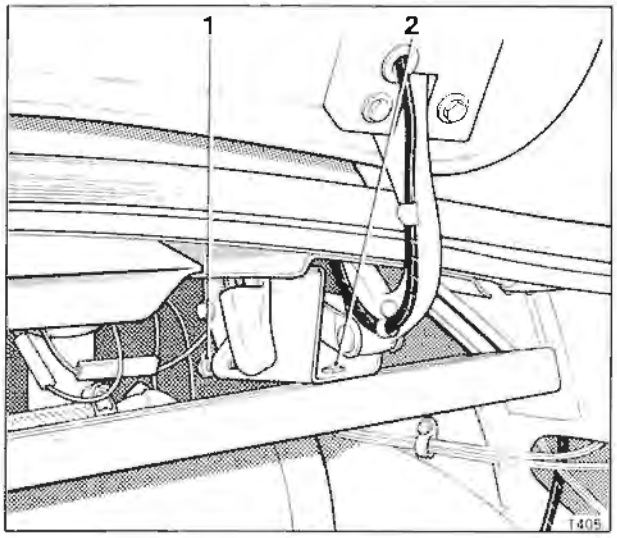

Fig. S32 Luggage compartment lid hinges and torsion bars
1 Adjuster - hinge torsion rods
2 Crossmember retaining bolt

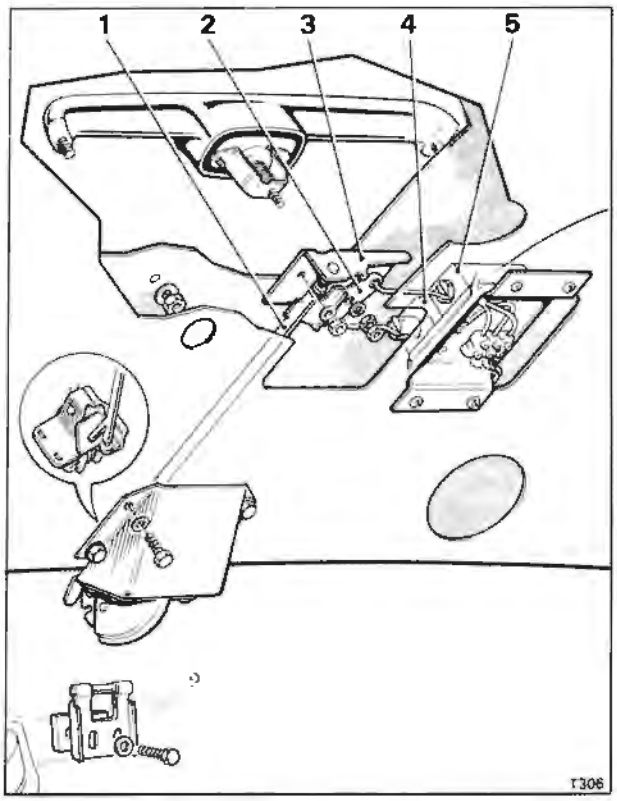

Fig. S33 Luggage compartment lid handle, lock mechanism and solenoids (Silver Shadow II, Bentley T2 and Silver Wraith II)
1 Remote control rod
2 Contactor lever
3 Mounting plate
4 Locking solenoid
5 Unlocking solenoid

correctly (see Fig. S32).

The screws should be adjusted so that an initial downward effort of approximately 9kg. (20 lb.) is required, at the luggage compartment lid handle, to move the lid from the fully open to the fully closed position.

Luggage compartment lid lock mechanism, handle and solenoids - To remove
Silver Shadow II, Bentley T2 and Silver Wraith II

1. Remove the four self-tapping screws securing the cover plate around the lock mechanism; remove the cover plate.
2. Ease the carpet trim away from the lock mechanism and remove the four 2BA setscrews securing the mechanism to the lid. Remove the mechanism and withdraw the remote control rod.
3. Disconnect the battery.
4. Release the two screws securing the cover plate over the solenoids and actuating mechanism; remove the cover plate.
5. Remove the solenoid operating rods from the connector by pulling them from their bushes.
6. Disconnect the electrical leads to the solenoids at the terminal block; note the colour code of the leads to ensure correct assembly.
7. Remove the solenoids and mounting plate by releasing the four screws securing the plate to the lid.
8. Remove the contactor lever (see Fig. S33) by releasing the two lock-nuts.
9. Remove the two nuts and washers securing the mounting plate of the actuating mechanism to the lid; remove the mounting plate.
10. Remove the nuts and washers securing the exterior handle to the lid (see Fig. S33); remove the handle.

Corniche
Prior to car serial number 32948 (except those cars destined for West Germany from car serial number 31119 up to and including 32947)

1. Remove the hinge trim covers. Release the screws securing the covers to the lid.
2. Remove the luggage compartment lid trim. Release the screws situated around the perimeter of the lid.
3. Remove the lock mechanism, finishers and packing pieces by releasing the four screws securing them to the lid.
4. Remove the chrome finisher surrounding the lock mechanism aperture by releasing the four screws securing the finisher to the lid.
5. Disconnect the battery.
6. Remove the contactor lever (see Fig. S34). Release the nut and washers at the end of the lock spindle and disengage the pivot lever pin from the contactor lever.
7. Remove the lid handle and actuating mechanism. Release the two nuts and washers securing the ends of the handle to the lid (see Fig. S34).

8. Disconnect the electrical leads of the solenoid loom at the terminal block on the mounting plate. Note the colour code of the leads to ensure correct assembly.
9. Remove the solenoids and mounting bracket assembly. Release the four bolts, plain and shake-proof washers securing the assembly to the lid.

From car serial number 32948 (including those cars destined for West Germany from car serial number 31119 up to and including 32947)
1. Repeat Operations 1 to 5 inclusive from cars prior to car serial number 32948.
2. Remove the contactor lever (see Fig. S35). Release the nut and washers at the end of the lock spindle and disengage the pivot pin from the contactor lever.
3. Remove the lid handle and actuating mechanism. Release the two nuts and washers securing the ends of the handle. Also, remove the nuts and washers securing the handle actuating mechanism guide bracket and clamping plate to the lid (see Fig. S35).
4. Disconnect the electrical leads of the solenoid loom at the terminal block on the mounting plate. Note the colour code of the leads to ensure correct assembly.
5. Remove the solenoids and mounting bracket assembly. Release the four bolts, plain washers and shakeproof washers securing the solenoid assembly to the lid. Retain the two 2BA packing weshers situated between the mounting bracket and the lid (see Fig. S35).

Camargue
1. Remove the trim cover from around the lock mechanism by releasing the six self-tapping screws and cap washers.
2. Remove the four setscrews and washers securing the lock mechanism to the mounting bracket; remove the lock mechanism.
3. Disconnect the battery.
4. Remove the screws and washers securing the lock mounting bracket to the lid; remove the mounting bracket.
5. Disconnect the electrical leads to the solenoids at their Lucar connections; note the colour code of the leads to ensure correct assembly.
6. Detach the solenoids from the lid by releasing the two 4BA screws and washers retaining each solenoid. Remove the solenoids and connecting link assembly from the lid, detaching the connecting link from the pin of the operating lever during removal.
7. Loosen the four 2BA screws securing the exterior handle and remove the two lower screws and washers. Release the two handle return springs and remove the exterior handle from the lid.

Note that the two upper screws and washers cannot be removed from the lid lock control bracket until the actuating mechanism assembly has been removed.

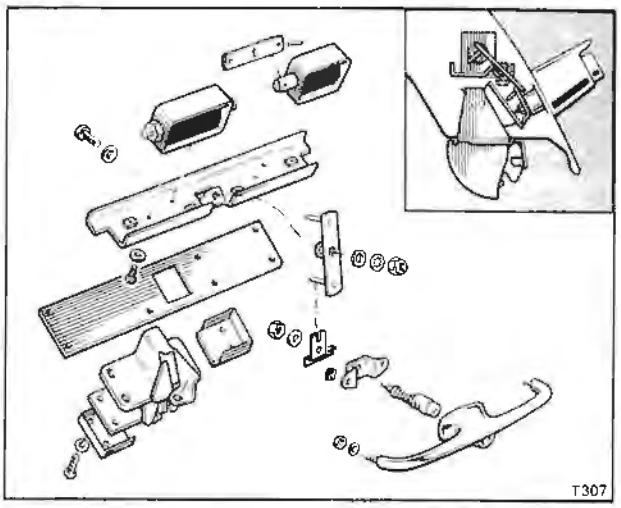

Fig. S34 Luggage compartment lid handle, lock mechanism and solenoids (Corniche) Prior to car serial number 32948 (except those cars destined for West Germany from car serial number 31119 up to and including 32947)

8. Remove the two 2BA screws and washers securing the mounting plate of the actuating mechanism assembly to the lid; remove the actuating mechanism.
9. Remove the two exterior handle upper retaining screws and washers from the lid lock control brackets (see Operation 7).

Luggage compartment lid lock mechanism, handle and solenoids - To fit (see Fig. S33).
To fit the lock mechanism, handle and solenoids reverse the procedure given for removal noting the following points.
Silver Shadow II, Bentley T2 and Silver Wraith II
1. Fit the rubber sealing ring to the handle, temporarily locating it in position with Glasticon Sealer (see Fig. S37).
2. Fit the actuating mechanism mounting plate, remote control rod and the lock mechanism as follows.

Fit the mounting plate. Slacken the remote control rod adjuster thereby reducing the length of the rod. Fit the rod and the lock mechanism to the lid ensuring that each end of the rod locates correctly in the special bearings. Unscrew the rod adjuster until any end-float is removed then tighten the adjuster lock-nut.
3. Check that the contactor lever moves freely and, when moved manually through the lock and unlock positions the solenoid plungers operate satisfactorily.
4. Press the handle push button. The push button should be set so that the contactor lever is free to rotate when there is approximately 2,0 mm. (0.080 in.) of travel remaining at the button.

If there is insufficient free travel, the arm of the

Printed in England
© Rolls-Royce Motors Limited 1978
November 1978
T.S.D. 4200

actuating mechanism mounting plate should be bent inboard until the travel is correct; only a small amount of bending should be necessary.

5. Check that the wheel on the lock mechanism can be rotated freely when the handle push button is fully depressed.

6. Using the key, check that the lock operates satisfactorily.

Turn the key to the locked position. Press the handle push button and check that the lock mechanism is not operated.

Turn the key to the unlocked position. Press the handle push button and check that the lock mechanism is operated.

7. Check that the lid can be opened and closed without difficulty and that all free movement is removed from the lid when closed.

If necessary, adjust the position of the lock catch plate at the rear of the luggage compartment until the above conditions are complied with.

Corniche (see Fig. S34)

Prior to car serial number 32948 (except those cars destined for West Germany from car serial number 31119 up to and including 32947)

1. Fit the contactor lever ensuring it is positioned correctly. Fit the plain and shakeproof washers then apply Loctite Screwlock 222 to the 3BA nut before securing the lever into position.

2. Check that the contactor lever moves freely and that, when moved manually through the lock and unlock positions the solenoid plungers operate satisfactorily.

3. Press the handle push button. The push button should be set so that the contactor lever is free to rotate when there is approximately 2,0 mm.

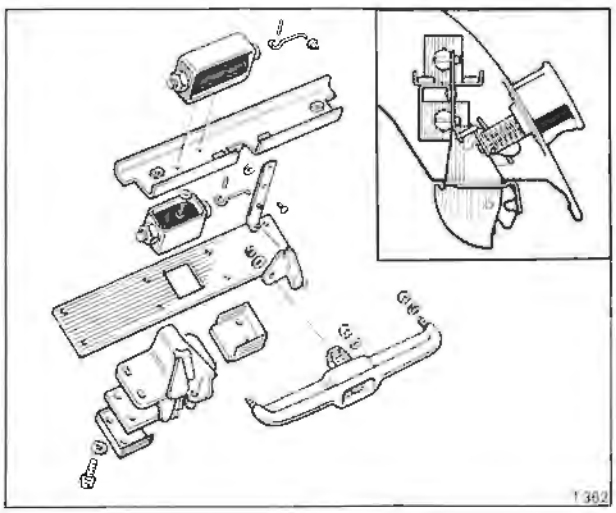

Fig. S35 Luggage compartment lid handle, lock mechanism and solenoids (Corniche) From car serial number 32948 (including those cars destined for West Germany from car serial number 31119 up to and including 32947)

(0.080 in.) of travel remaining at the button.

If there is insufficient free travel, the contactor legs should be reset until the travel is correct; only a small amount of bending should be necessary.

4. Repeat Operations 5,6 and 7 from Luggage compartment lid lock mechanism, handle and solenoids - To fit, Silver Shadow II, Bentley T2 and Silver Wraith II.

Corniche (see Fig. S35)

From car serial number 32948 (including those cars destined for West Germany from car serial number 31119 up to and including 32947

1. Ensure that the pivot lever operates freely on its rivet.

2. When fitting the solenoid and mounting bracket assembly into the lid proceed as follows.

Fit the pivot lever pin into the contactor lever slot. The pin must protrude beyond the back face of the contactor lever by a minimum of 1,59 mm. (0.062 in.).

Fit the two front mounting bolts, plain and shakeproof washers loosely, to hold the assembly in position. Slide two 2BA washers, one to each rear hole, between the reinforcing member in the lid and the bracket assembly to function as packing pieces. Fit the two rear mounting bolts with plain and shakeproof washers. Tighten the four mounting bolts securely.

3. Fit the contactor lever in its correct position. Fit the plain and shakeproof washers then apply Loctite Screwlock 222 to the 3BA nut before securing the lever into position.

Check the clearance between the underside of the contactor lever and the adjacent spring retainer face. The clearance should not exceed 1,59 mm. (0.062 in.). If the clearance exceeds this figure correct it by increasing the length of the lock spindle flats, cutting away the surplus spindle length and extending the 3BA thread.

4. Check that the contactor lever moves freely and that, when moved manually through the lock and unlock positions the solenoid plungers operate satisfactorily.

5. Fit the rubber sealing ring and fibre washers to the handle, temporarily locating them in position with Glasticon Sealer.

6. Remove the nuts securing the spring retainer. Pass the clamping plate over the contactor lever and the spring retainer.

7. Fit the handle and lock assembly. Guide the clamping plate through the luggage compartment lid aperture ensuring that it is the correct way round.

8. Secure the clamping plate in its studs using shakeproof washers and nuts. Fit plain and shakeproof washers to each stud at the outer ends of the handle and secure with nuts.

9. Press the handle push button. The push button should be set so that the contactor lever is free to rotate when there is approximately 2,0 mm. (0.080 in.) of travel remaining at the button.

If there is insufficient free travel, the contactor legs should be reset until the travel is correct; only a small amount of bending should be necessary.

10. Repeat Operations 5, 6 and 7 from Luggage compartment lid lock mechanism, handle and solenoids - To fit, Silver Shadow II, Bentley T2 and Silver Wraith II.

Camargue (see Fig. S36)

1. Fit the private lock.
2. Ensure that the two handle upper retaining screws and washers are fitted loosely into position before fitting the actuating mechanism.
3. Locate the actuating mechanism assembly into the private lock. Position the mounting plate of the assembly at its lowest point and secure with the 2BA setscrews and washers.
4. When locating the solenoids and connecting link into the lid, ensure that the pin of the operating lever enters the slot in the connecting link.

Note that the two screws which secure the 'unlock' solenoid are slightly longer than those which secure the 'lock' solenoid.

5. Check that the solenoids and lock operate satisfactorily, using the centralised locking switch and a key respectively.

Solenoids and operating rods - To dismantle
Silver Shadow II, Bentley T2 and Silver Wraith II

1. Remove the earth wire and terminal block from the solenoids mounting plate.
2. Remove the solenoids and operating rods by releasing the four screws and washers securing the solenoids to the mounting plate.
3. Using a parallel punch, remove the 3,18 mm. (0.125 in.) diameter roll pins securing the operating rods to the solenoid plungers.

Solenoids and operating rods - To assemble (see Fig. S33)
Silver Shadow II, Bentley T2 and Silver Wraith II

To assemble the solenoids and operating rods reverse the procedure given for dismantling noting the following points.

1. Always fit a new roll pin when securing a solenoid plunger to an operating rod.
2. Always ensure that washers are fitted under the heads of the screws securing the solenoids to the mounting bracket.

Solenoids and connecting link - To dismantle
Corniche
Prior to car serial number 32948 (except those cars destined for West Germany from car serial number 31119 up to and including 32947)

1. Remove the earth wire and terminal block from the solenoid mounting plate.
2. Remove the pivot lever assembly. Release the nut, bolt, plain washers and shakeproof washers from the central pivot point, withdrawing the pivot lever from the solenoid connecting link.

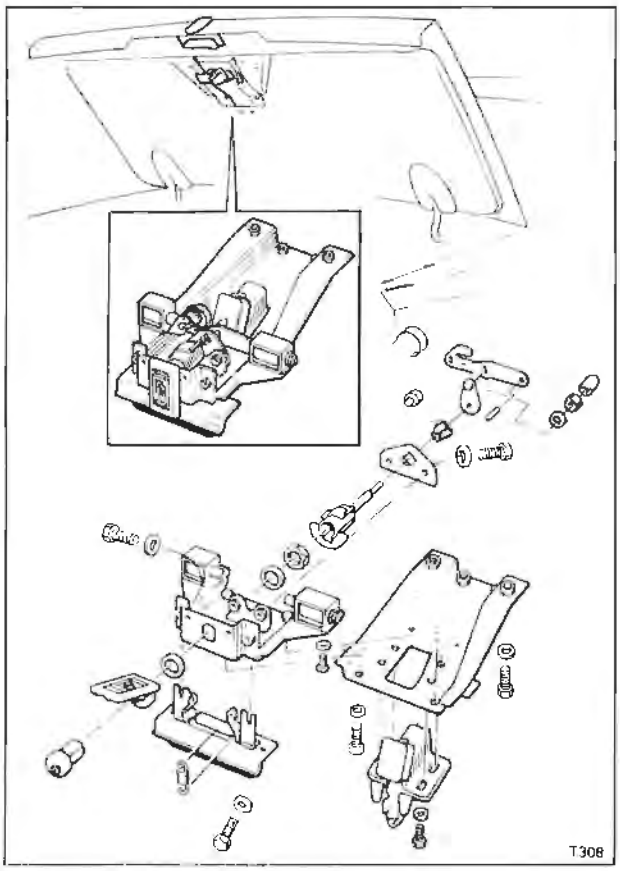

Fig. S36 Luggage compartment lid handle, lock mechanism and solenoids (Camargue)

3. Remove the solenoids and connecting link by releasing the four screws and washers securing the solenoids to the mounting plate.
4. Using a parallel punch, remove the 3,18 mm. (0.125 in.) diameter roll pins securing the connecting link to the solenoid plungers.

Solenoids and connecting link - To assemble (see Fig. S34)
Corniche
Prior to car serial number 32948 (except those cars destined for West Germany from car serial number 31119 up to and including 32947)

To assemble the solenoids and connecting link reverse the procedure given for dismantling noting the following points.

1. Always fit a new roll pin when securing a solenoid plunger to the connecting link.
2. When fitting the pivot lever assembly ensure that the end of the lever having the small pin secured to it is placed in the centre hole of the connecting link.
3. Always ensure that washers are fitted under the heads of the screws securing the solenoids to the mounting bracket.

Printed in England
© Rolls-Royce Motors Limited 1978
November 1978
T.S.D. 4200

Solenoids and operating rods - To dismantle
Corniche
From car serial number 32948 (including those cars destined for West Germany from car serial number 31119 up to and including 32947)
1. Remove the earth wire and terminal block from the solenoid mounting plate.
2. Remove the operating rods from the bushes in the pivot lever.
3. Remove the solenoids and operating rods by releasing the four screws and washers securing the solenoids to the mounting plate.
4. Using a parallel punch, remove the 3,18 mm. (0,125 in.) diameter roll pins securing the operating rods to the solenoid plungers.

Solenoids and operating rods - To assemble (see Fig. S35)
Corniche
From car serial number 32948 (including those cars destined for West Germany from car serial number 31119 up to and including 32947)
To assemble the solenoids and operating rods reverse the procedure given for dismantling noting the following points.
1. When fitting a new pivot lever assembly, secure the lever with a rivet and washer (see Fig. S35). Ensure that the pivot lever operates freely on its pivot.
2. Always fit a new roll pin when securing a solenoid plunger to an operating rod.
3. Always ensure that washers are fitted under the heads of the screws securing the solenoids to the mounting bracket.
4. When fitting a new solenoid, operating rod and mounting plate assembly, lightly secure the assembly in a vice and set the pivot lever perpendicular to the mounting bracket.

From this setting push each solenoid plunger in turn, into the solenoid frame until they abut their stops. Each plunger before it meets its stop should move the pivot lever a total of 12,70 mm. (0.50 in.) precisely when measured at the rear end of the pivot lever pin.

If this condition is not achieved elongate the solenoid mounting holes in the appropriate sideways direction to effect a correction.

Note
Do not elongate the holes in a front or rearwards direction as this will create side loading between the solenoid plunger and its frame.

Solenoids and connecting link - To dismantle
Camargue
1. Release the legs of the tension spring from the guide bracket then remove the guide bracket.
2. Remove the tension spring and roller from the connecting link.
3. Using a parallel punch, remove the 3,18 mm. (0,125 in.) diameter roll pins securing the connecting link to the solenoid plungers.

Solenoids and connecting link - To assemble (see Fig. S36)
Camargue
To assemble the solenoids and connecting link reverse the procedure given for removal noting the following points.
1. Always fit a new roll pin when securing a solenoid plunger to the connecting link.
2. Ensure that the 'lock' solenoid is connected to the slotted hole in the connecting link.

Actuating mechanism and mounting plate - To dismantle
Camargue
1. Remove the end cap from the push rod.
2. Remove the 2BA nut and washer securing the operating lever to the push rod; remove the lever from the rod.
3. Remove the push rod from the mounting plate by pulling the rod from the nylon bush.

Actuating mechanism and mounting plate - To assemble (see Fig. S36)
Camargue
To assemble the actuating mechanism and mounting plate reverse the procedure given for removal noting the following points.
1. During assembly, lubricate all metal to metal pivots with Rocol MTS 1000 grease or its equivalent.
2. Check the condition of the nylon bush in the mounting plate; fit a new bush if necessary.
3. Bond the cap to the push rod with Araldite Adhesive.

Private lock mechanism - To dismantle (see Fig. S37)
Silver Shadow II, Bentley T2 and Silver Wraith II. Also Corniche cars from car serial number 32948 (including those cars destined for West Germany from car serial number 31119 up to and including 32947)
1. Remove the contactor lever (see Figs. S33 and S35).
2. Remove the exterior handle and handle mechanism.
3. Remove the guide plate by releasing the two circlips retaining it in position.
4. Remove the spring and the nylon sleeve from the lock spindle.
5. Withdraw the lock, nylon retaining plate and spacers from the handle.
6. Remove the rear section of the private lock by releasing the two retaining screws (see Fig. S37).
7. Remove the nylon retaining plate and spacers.
8. Remove the rubber sealing ring.

Corniche (see Fig. S34)
Prior to car serial number 32948 (except those cars destined for West Germany from car serial number 31119 up to and including 32947)
1. Repeat Operations 1 to 4 inclusive from Private

lock mechanism - To dismantle, Silver Shadow II, Bentley T2 and Silver Wraith II.
2. Withdraw the lock from the handle.
3. Remove the rear section of the lock cylinder by releasing the two retaining screws (see Fig. S34).

Camargue (see Fig. S36)
1. Remove the exterior handle and actuating mechanism (see Luggage compartment lid lock mechanism, handle and solenoids - To remove).
2. Remove the large nut securing the private lock to the lid then remove the adjusting washer.
3. Remove the private lock complete with the paint protection washer and the hinged lock cover.

Private lock mechanism - To assemble (see Fig. S37) Silver Shadow II, Bentley T2, Silver Wraith II and all Corniche cars
To assemble the private lock mechanism reverse the procedure given for removal.

Camargue
1. Before fitting the lock, lubricate the pivots of the hinged cover with Rocol MTS 1000 grease or its equivalent.
2. Ensure that the paint protection washer is fitted between the hinged cover and the lid.
3. Check that the threads of the private lock do not protrude through the nut when the nut is fully tightened, as the nut acts as a control stop.
If necessary fit additional adjusting washers under the nut to obtain this position.

Luggage compartment lid seals - To remove Silver Shadow II, Bentley T2 and Silver Wraith II
1. Using a sharp knife or similar tool carefully remove the seal from the body.
2. Remove the small sealing strip from the inner rim of the lid aperture (see Fig. S38, item 3).

Corniche
1. Remove the chromed strip from the rear face of the luggage compartment.
2. Using a sharp knife or similar tool carefully remove the seal from the body.

Camargue
1. Using a sharp knife or similar tool carefully remove the seal from the body.

Luggage compartment lid seals - To fit Silver Shadow II, Bentley T2 and Silver Wraith II
1. Clean the bonding surfaces of the seal and the lid aperture flange with Bostik Cleaner 6001; allow approximately one hour to dry.
2. Apply Boscolite Primer 9252 to the bonding area on the flange; allow approximately one hour to dry.
3. Apply Boscoprene Adhesive 2402 (parts 1 and 2) to the bonding surfaces of the seal and flange. Also, apply the adhesive to the two small rubber strips which fit into the radiused bottom corners of the seal

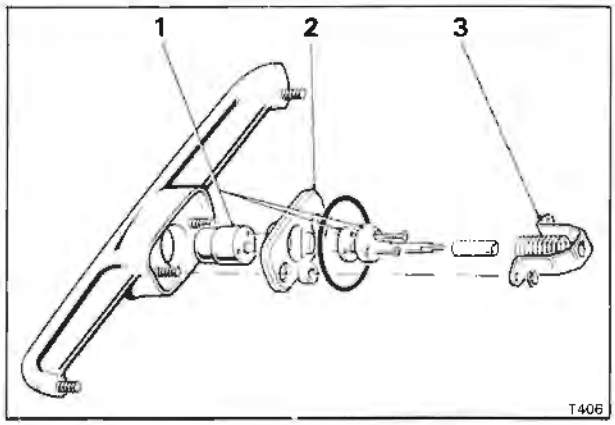

Fig. S37 Private lock mechanism
1 Private lock
2 Retaining plate
3 Guide plate

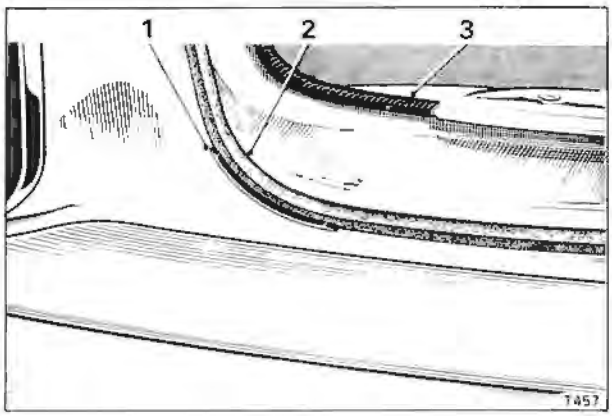

Fig. S38 Luggage compartment lid seals (Silver Shadow II, Bentley T2 and Silver Wraith II)
1 Rubber strip
2 Luggage compartment lid seal
3 Sealing strip - inner rim

channel (see Fig. S38, item 1). Allow between 10 and 15 minutes for the adhesive to partly dry.
Care should be taken to keep the primer and adhesive away from the finished paintwork.
4. Fit the two rubber strips to the lower corners of the seal channel.
5. Fit the lid seal to the aperture flange. Starting at the central point of the bottom flange, press the seal into position ensuring that the seal is not stretched. Also, ensure that the seal is level with the start of the radius on the body (see Fig. S29, inset).

When the circuit of the aperture flange is complete, abut the two ends of the seal at the centre of the bottom flange using Boscoprene Adhesive 2402.

Printed in England
© Rolls-Royce Motors Limited 1978
November 1978
T.S.D. 4200

6. The luggage compartment lid should remain open for a minimum period of 12 hours after fitting a new seal.
7. When the seal adhesive is dry, close the lid and water test for leaks.
8. If necessary, reset the position of the luggage compartment lock catch plate (see Luggage compartment lid lock mechanism, handle and solenoids - To fit, Operation 7).

Corniche

1. Clean the seal channel using Bostik Cleaner 6001; allow approximately 1 hour to dry.
2. Apply Bostik Adhesive 1261 to the seal channel.
3. Fit the three sections of the seal into position ensuring that the mitred bottom corners of the seal match perfectly.
4. Apply Romac Rubber Solution 61-805 or its equivalent to the mating faces of the mitred joints. Allow the solution to become 'tacky' then press the faces firmly together.
5. Fix the small rubber strip to the underside of each mitred joint (see Fig. S39, item 2) using Romac Rubber Solution 61-805 or its equivalent. Allow the solution to become 'tacky' and press firmly together.
6. Fit the chrome strip to the rear edge of the seal.

Camargue

1. Clean the bonding surfaces of the seal and the lid aperture flange with Bostik Cleaner 6001; allow approximately one hour to dry.
2. Apply Boscolite Primer 9252 to the bonding area on the flange; allow approximately one hour to dry.
3. Apply Boscoprene Adhesive 2402 (parts 1 and 2) to the bonding surfaces of the seal and flange. Allow between 10 and 15 minutes for the adhesive to partly dry.

Care should be taken to keep the primer and adhesive away from the finished paintwork.

4. Fit the lid seal to the aperture flange. Starting at the central point of the bottom flange, press the seal into position ensuring that the seal is not stretched.

When the circuit of the aperture flange is complete, abut the two ends of the seal at the centre of the bottom flange using Boscoprene Adhesive 2402.

5. Repeat Operations 6, 7 and 8 from Luggage compartment lid seals - To fit, Silver Shadow II, Bentley T2 and Silver Wraith II.

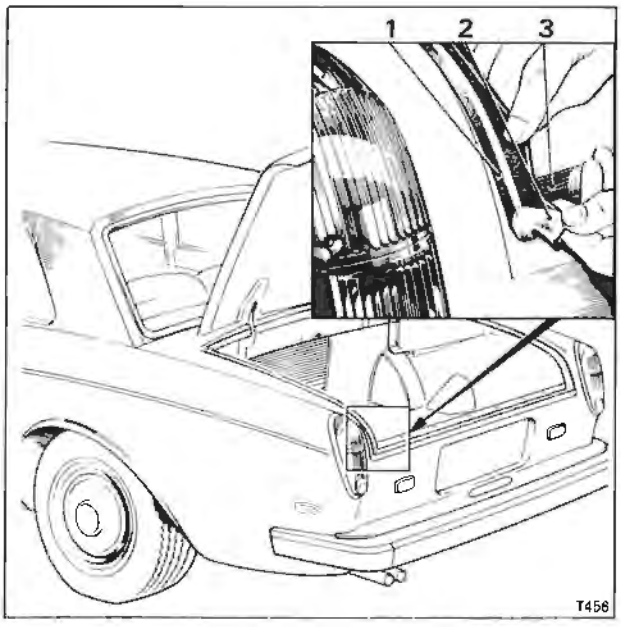

Fig. S39 Luggage compartment lid seal (Corniche)
1 Luggage compartment lid seal
2 Rubber gusset fitted to rear mitred joint of seal
3 Chrome plate

Section S4

Paint
Contents

	Page
Care of paint finishes	S4–3
Maintenance of paintwork	S4–3
Properties and uses of paint	S4–3
General Information	S4–3
Undercoats	S4–4
Primers	S4–4
Primer surfacers	S4–4
Stoppers	S4–5
Polyester stoppers	S4–5
Colour coats	S4–6
General preparation before paint	S4–6
General preparation of finishing paints	S4–6
Colour finishes – Material types	S4–7
Nitro cellulose or Modified nitro cellulose lacquers	S4–7
Thermoplastic acrylic lacquers (FTA paints)	S4–8
Metallic paints	S4–8
Thinners	S4–8
Surface preparation	S4–9
General information	S4–9
Flatting	S4–9
Metal pretreatment	S4–10
Masking	S4–10
Spraying techniques, application faults and remedies	S4–11
General spraying technique	S4–11
Planning	S4–11
Spray painting equipment	S4–11
Air compressor	S4–12
Air transformer	S4–13
Air hose	S4–13
Paint container	S4–14
Remote cup	S4–14
Paint pumps	S4–14
Fluid hose	S4–14
Spray guns	S4–15
Principal parts of the spray gun	S4–16
Fluid tip	S4–16
Spray gun technique	S4–17
Spray gun adjustments	S4–17
Volume flow adjustment	S4–17
Atomizing air pressure adjustment	S4–17
Spreader adjustment	S4–18
Basic rules of spraying	S4–18
Common faults	S4–18
Motion study	S4–20

	Page
Cleaning	S4–20
Cleaning the spray gun	S4–21
Cleaning the pressure feed system	S4–22
Hose and equipment cleaner	S4–22
Cleaning other equipment	S4–22
Remedies for spraying problems	S4–23
Safety in the finishing shop	S4–24
Preventive measures	S4–24

Printed in England

© Rolls-Royce Motors Limited 1979

Paint

Printed in England
© Rolls-Royce Motors Limited 1979

Introduction

This section has been prepared to assist refinishing personnel during the rectification and repainting of Rolls-Royce and Bentley motor cars.

Care of paint finishes

To obtain a deeper lustre and a smoother surface in the paint finish of cars the use of modified acrylic nitrocellulose and full thermoplastic acrylic type paints is recommended.

Modified cellulose and full thermoplastic finishes are extremely resistant to all normal forms of atmospheric attack, provided that the simple maintenance procedures are followed.

Note

Car finishes are not chemically resistant. Severe localised contamination with acid or alkaline solution can cause pitting or discolouration if left in contact with the paint for any length of time.

Maintenance of paintwork

For the correct maintenance of paintwork the following procedures are recommended.

1. Always wash paintwork with clean, preferably running cold water.
2. Do not use excessive pressure from the hose, but thoroughly wet the car all over before commencing cleaning.
3. Start at the top of the car and work down using clean sponges and fresh water as much as possible. Frequent washing is the best safeguard against unseen contaminants.

Note

If washing with cold water is not effective, warm water with a small amount of detergent will help to remove the gummy deposits exuded by some trees in the summer months.

4. Remove the water with a chamois leather. When leathering off the car the leather should be frequently washed in clean cold water and the surface water wrung out before continuing to use.
5. Sponge and leather all window frames and door edges.
6. Clean the windscreen, rear window and door windows inside and out. Lower the electrically operated windows to clean the portion normally covered by the window channels.
7. Remove any road tar from the car by gently rubbing with a soft cloth, moistened with turpentine substitute.
8. **Under no circumstances should any attempt be made to remove dirt, mud or dust when dry or with a dry cloth.** This practice can produce serious scratching of the surface finish, which will probably require professional repairs.
9. **The use of automatic car washes is not recommended,** as the detergents used and the nylon brush washing action, may stain or seriously scratch the paintwork or damage the windows or radiator shell.
10. At least every three months, after normal cleaning with cold water the paintwork should be restored by application of a suitable cleaner/polish system. In certain climatic conditions where longer periods of sunshine prevail, more frequent cleaning/polishing may well be necessary, dependent upon the colour of the car.
11. **Do not polish the car in a dusty or gritty atmosphere or in direct sunlight.**
12. When polishing **do not** apply a wax polish on top of previous wax layers and traffic film, as a build-up of wax can induce its own type of rain spotting or discolouration defects. A good quality friction emulsion cleaner/polish should be applied in accordance with the manufacturer's recommendation. Slight discolouration on the polishing cloth when carrying out this procedure will be evident but is of no cause for concern.
13. When the cleaner has been applied and removed, a good quality siliconised wax polish should then be applied to provide a weatherproof lustre.

Note

If regular maintenance polishing as described in Operations 10 to 13 inclusive is not carried out, the original gloss will be obscured and rain spotting may reach objectional proportions. Paintwork should therefore be cleaned and polished as soon as the gloss begins to fade, not when it has already become dull.

Properties and uses of paint

General information

There are two distinct stages in the repair of paint or in the complete refinish of a car, they are as follows.

The first stage consists of the preperation of the metal or old paint surface and the application of any undercoating system to give a smooth level surface to accept the final finishing coats. The correct choice of undercoats and correct application are essential, as mistakes made at this stage cannot be seen until the colour coats are applied and will then be extremely expensive to rectify.

The final stage consists of the application of a sufficient number of colour coats to give the required film build for durability. This also obliterates the undercoat on the repaired areas and matches the original finish for colour and general appearance.

Paint is a product which, by its very composition, is vulnerable to misuse. Once a container is opened

numerous problems can arise. For example, it has been found when investigating colour problems in service, that often the material has not been sufficiently stirred and with the increasing use of metallics, the necessity to completely and thoroughly stir the paint before use cannot be over emphasised. Also, few paints used in the refinishing trade are supplied ready for use, therefore the addition of thinners is necessary. Rolls-Royce Motors Limited and the paint manufacturers indicate clearly in their literature the correct thinner to use, the approximate thinning proportions and the recommended application viscosity. **It cannot be too strongly emphasised that these recommended procedures must be adhered to.**

A paint can generally be described as a mixture of fluids and solids of different types. They are as follows.

1. Fluids — solvent, binder, plasticiser and additives.
2. Solids — pigments and fillers.

The term 'paint' can be used to identify any liquid material that when applied to a surface will dry to give a hard continuous film. Film forming or drying takes place in solvent based paints (the ones used by Rolls-Royce Motors Limited) solely by evaporation of the solvents and there is no chemical change involved. Paints which fall into this category are.

1. Cellulose and acrylic based colour paints.
2. Cellulose or acrylic based primers/surfacers.
3. Primer fillers and cellulose or acrylic based stoppers.



Fig. S40 **Spray application of etching primer onto bare metal and polyester stopper**



Fig. S41 **Spray application using primer surfacer**

Undercoats

Undercoat is a general description broadly used to identify coatings which can provide a base for the final colour coats. Primers, fillers, surfacers or stoppers all belong to this group.

Primers

Primers are formulated to give good adhesion between the substrate and the final paint system.

As their main purpose is to establish a secure base for any subsequent painting operations, primers are most effective when applied in relatively thin films. They are not designed to fill scratches and should not be flatted, a very light de-nib is all that is required.

Etching primers are a special type of primer formulated to provide a metal etch particularly on light alloy or zinc surfaces. They contain an acid activator which has to be mixed with the primer base approximately twenty minutes before use. After mixing, etching primers have only a useful life of approximately six hours.

Etching primers contain special pigments which help to prevent corrosion should the paint film become damaged.

Etching primers should be applied to all bare metal areas on steel, aluminium or zinc (see Fig. S40).

Primer surfacers

Primer surfacers are formulated to contain a larger amount of pigment than primers and consequently they are capable of filling minor scratches or imperfections. As well as better filling properties primer surfacers also have to promote good adhesion between the primer and subsequent coats of applied paint; they are, after drying, generally sanded to eliminate surface imperfections and to ensure that a uniform gloss is achieved after applying the colour coats (see Fig. S41).

Nitrocellulose based primer surfacers and fillers are recommended for use in refinishing. They are universal products and can be used in virtually any paint rectification system. Their particular attributes are quick drying to the flatting stage and a dry over-spray which will not adhere to and spoil adjoining work. **Do not attempt to fill all metal imperfections in the shortest time as these**

products should not be used in one heavy application at a high viscosity. This would result in slow drying, difficult flatting, sinkage of top coats and in many cases sand scratch swelling when the colour coats are applied. **The correct way which also saves time is to thin correctly and to build up in several thin coats.**

The correct way to use primer surfacers can be summarised as follows.

1. Stir thoroughly to ensure that any pigment settlement is fully dispersed.
2. Use the manufacturer's recommended thinner.
3. Thin to the recommended viscosity and check with a viscosity cup (see Fig. S47).
4. Apply a minimum of two even coats, allowing an adequate drying time between coats.
5. Avoid applying primer surfacer in a dusty atmosphere as this can lead to pin holing.
6. Ensure that the primer surfacer is properly dry before starting flatting operations.

Stoppers

A stopper is a heavily pigmented material with a paste like consistency. It is used to fill deep scratches, etc. and is usually applied with a knife or spreader. To apply the stopper correctly is a skilled operation. The surface of the stopper should be smooth and free from knife marks with no pin holes. The stopper should be applied in the following manner.

1. Using a knife or spreader at an angle of approximately 60° to the painted surface, apply firm even pressure. If the spreader is held at a more acute angle the stopper will tend to roll over the spreader and force air bubbles into the film.
2. **Stopper must never be applied in one thick coat.** The stopper will dry on the surface and remain soft underneath with subsequent sinkage of the colour coats. A high proportion of refinishing paint failures can be attributed to attempts to reduce processing times by applying stopper in thick layers.

The surface should be built-up with several thin layers and the operator should ensure that each layer is completely hard before proceeding with the next.

3. Stoppers should not be used as a substitute for work on metal which normally requires a hammer or file.

Polyester stoppers (see Fig. S42)

Polyester stoppers are two pack materials which dry by chemical reaction. Although thicker films may be applied which harden more quickly, it is still better to build up the thickness in more than one operation. Due to the consistency of these products the mixing of the two components before use will introduce air bubbles. If very thick layers are applied, it is not possible to press out the stopper and pin holes result. After the first layers of stopper have been flatted, a thin layer should then be applied to seal off any exposed pin holes.

Note

Two pack polyester stoppers must never be sandwiched between coats of colour as there is a considerable risk of blistering or cracking of the feather edge.



Fig. S42 Hand application of polyester stopper to bare metal

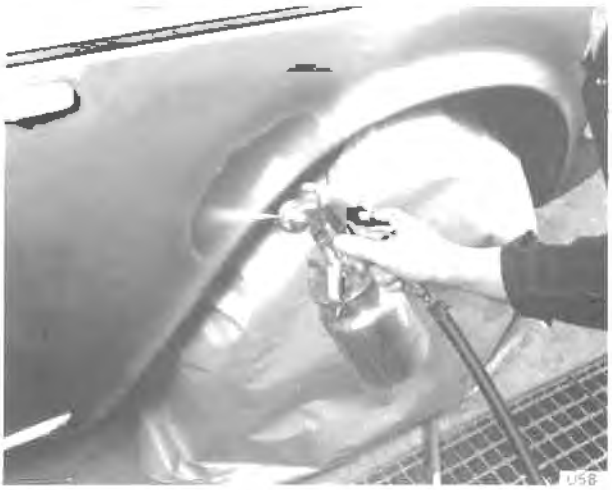

Fig. S43 Localized spray application of colour onto primer surfacer exposed during the flatting operation – 'spotting-in'



Fig. S44 Checking the masking

Printed in England

© Rolls-Royce Motors Limited 1979

Colour coats

General preparation before paint

1. Before the paint is prepared the vehicle should be thoroughly inspected to ensure that the preparation is to the recommended standard.
2. Ensure that all bare metal and stopper areas have been spotted in with colour and that there are no damaged or unflatted areas (see Fig. S43).
3. Check that there is no detached or broken masking and that there is no loosely adherent overspray on the paper (see Fig. S44).



Fig. S45 **Blowing out crevices etc., with clean dry compressed air before cleaning and painting**



Fig. S46 **Degreasing the car using a clean lint free cloth**

4. All seams, crevices, channels, etc. should be blown out with clean dry compressed air applied at low pressure (see Fig. S45).
5. The area to be painted should be thoroughly washed with clean water and **immediately dried by hand using clean dry cloths. Do not** blow dry using compressed air as this method will leave concentrations of water soluble salts which will produce blistering in service.
6. The whole area should be degreased using a proprietary degreasing solvent. This will remove all traces of remaining grease, hand marks or other oil contaminants (see Fig. S46).

General preparation of finishing paints

Before preparing the finishing colour to be applied, check on the actual colour of the vehicle. This is achieved by examining the paint and trim identification label located on the underside of the bonnet lid in the front left-hand corner.

One of the greatest problems is colour matching, but the use of improved materials for the factory finishing of cars has greatly minimised the colour change problems on weathering during service.

When respraying a part of the car, check the colour of the refinishing material against the car. To do this, an area of paintwork on the car which is not to be resprayed, should be thoroughly cleaned. Use a light abrasive to remove all traffic film so that the true colour can be established.

To minimise colour differences Rolls-Royce Motors Limited supply only the original colour materials for use in service.

When preparing colour for refinishing the following guidelines should be followed.

1. Stir the paint thoroughly. This applies to all paints, it is particularly important when using metallic paint.

2. Before any thinners are added, ensure that the paint is at the recommended paint shop temperature of at least 18°C. (65°F.) see Figure S47.
3. Check that the correct thinner is being used. Note Rolls-Royce Motors Limited and the paint manufacturers recommendations.

The correctly formulated thinner will produce optimum results. The solvent which is already being used in the manufacture of the paint is taken into account. Therefore the mixture of solvents in the thinners will produce the correct dissolving power and an evaporation rate which will allow the quickest drying time consistent with good flow and gloss. **Cheap thinners do not have these properties.**

4. Thin with the correct proportion of thinners and then carry out a viscosity check as follows (see Fig. S47). This involves timing the flow of liquid through an orifice until the first break-point in the thread of liquid occurs.

a. Ensure that the cup and particularly the orifice, is clean, then carry out the preparation of the paint sample and all the following operations without delay.

b. Adjust the temperature of the paint sample, the flow cup and receiver to approximately 20°C. (68°F.).

c. With the orifice closed by the finger, fill the cup with the freshly stirred bubble-free paint sample until it just begins to overflow into the gallery. Pour slowly to avoid the formation of air bubbles. If bubbles are present, allow them to rise and then remove them from the surface. Check that the temperature of the paint sample in the cup is approximately 20°C. (68°F.).

d. Ensure that the level of the paint sample coincides with that of the top of the cup. This can conveniently be done by drawing the glass plate or straightedge across the rim of the cup and sliding it away horizontally.

e. Time the flow as described in Operation f. Verify immediately before and after each determination that the temperature of the paint sample is approximately 20°C. (68°F.).

f. Place a suitable receiver under the flow cup, remove the finger from the orifice and simultaneously start the stopwatch, stopping it when the stream of the paint sample first breaks (see Fig. S47).

g. Repeat the determination at least once. If a large variation is found, the cleanliness of the orifice should be checked and the determination repeated with a fresh paint sample.

h. If an excessive variation in flow time is still obtained, it is likely to be due to anomalous flow properties (thixotropy, etc).

Note

It is important that viscosity checks are made. Variations in viscosity will affect film thickness, drying time, flow characteristics and general appearance. It is particularly important when applying metallic finishes to use the correct recommended viscosity.

5. After preparing the colour to the recommended guidelines proceed as follows.

'Tak-rag' the surface before the colour coat is sprayed. Because the surface will have already been degreased, it is important to avoid touching the metal with bare hands. Operators are recommended to wear clean cotton gloves (see Fig. S48).

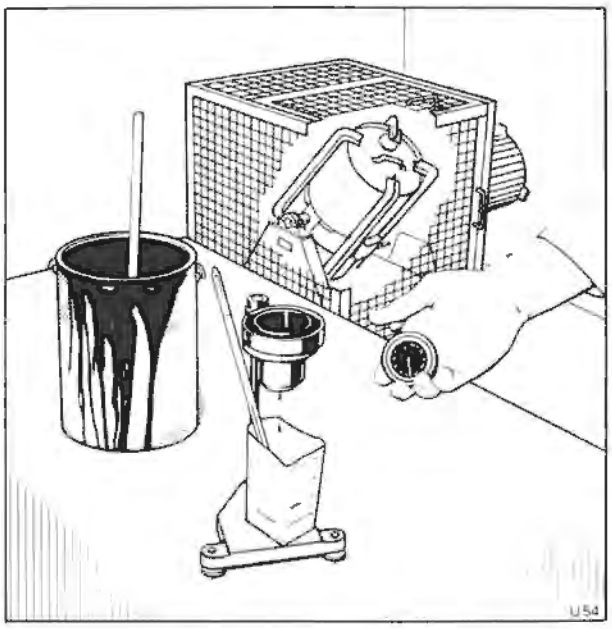

Fig. S47 Making a viscosity check



Fig. S48 Tak-rag the surface before spraying colour coat

6. For all information on spraying refer to 'Spraying techniques, application faults and remedies' (see Page S4-11).

Colour finishes — Material types

Nitro cellulose or Modified nitro cellulose lacquers

When using nitro cellulose or modified nitro cellulose lacquers the following points should be noted.

1. The lacquers are blends of nitro cellulose and synthetic resins.
2. They provide rapid drying, a reasonable gloss from the spray gun and good colour stability characteristics.

Printed in England
© Rolls-Royce Motors Limited 1979

3. If necessary, polishing can be undertaken after drying to improve the gloss and to remove any slight imperfections in the paint film.
4. The thinner used in the lacquers are strong and may cause old paint films to craze or wrinkle, therefore care must be taken when repairing an older car
5. The final appearance of the car when using cellulose lacquers is dependent upon following the recommended procedures and using the specified materials and thinners.

Thermoplastic acrylic lacquers (FTA paints)
When using thermoplastic acrylic lacquers (FTA paints) the following points should be noted.
1. Thermoplastic acrylic lacquers are generally based upon a fully synthetic resin system — methyl methacrylate (perspex) and a plasticising agent.
2. The characteristics of thermoplastic acrylic paints are very similar to cellulose lacquers. They give rapid drying and can be readily polished.
3. When using acrylic paints during repair, **it is important to use the correct primer surfacers/sealers otherwise cracking or crazing can occur.**
4. In temperate climates little difference exists in gloss and colour retention between modern cellulose and acrylic finishes.

In sub-tropical climates the thermoplastic acrylic lacquers have considerably better gloss retention.

Metallic paints
To obtain a satisfactory match to the original metal finish, it is helpful to know that the composition of metallic paint consists of clear lacquer, colouring pigment and aluminium flakes.

The aluminium flakes play a decisive role, not only do they provide the metallic appearance but the degree of sinkage of the flakes within the wet film after application will affect the colour. The degree of sinkage depends on many factors such as viscosity, thickness or wetness of coat applied, air pressures and drying time, or rate of evaporation of solvent from the paint film. For example.
1. If sprayed as a very heavy wet coat, the aluminium will settle deeper within the film and the colouring pigment will remain on the surface producing a darker shade or a mottling effect.
2. If sprayed as too dry a coat, the reverse effect takes place giving too light a colour and usually a lower gloss.

Different applications can alter the finished colour and appearance, it is therefore important that the number of variables is kept to a minimum. For this reason it **is imperative that the recommended thinning and viscosity information is adhered to.**

There is no single reason for the various faults of incorrect shade, streakiness or mottle effect. Each and every fault can be attributed to any one or a combination of reasons.

Many of the problems associated with metallic paints can be avoided by reference to Figure S49.

Thinners
1. **Use only the high quality thinners that are recommended for use with each paint.**

Cheap thinners often contain solvents which do little but reduce the paint to a viscosity suitable for spraying. Gloss and flow characteristics can be severely impeded with the result that the work may have to be repeated.
2. Every thinner recommended for a particular type of paint should be a blend of solvents carefully formulated to take into account the solvents already used in the manufacture of the paint. Also, the overall evaporation rate which will allow the fastest drying time consistent with good flow characteristics.

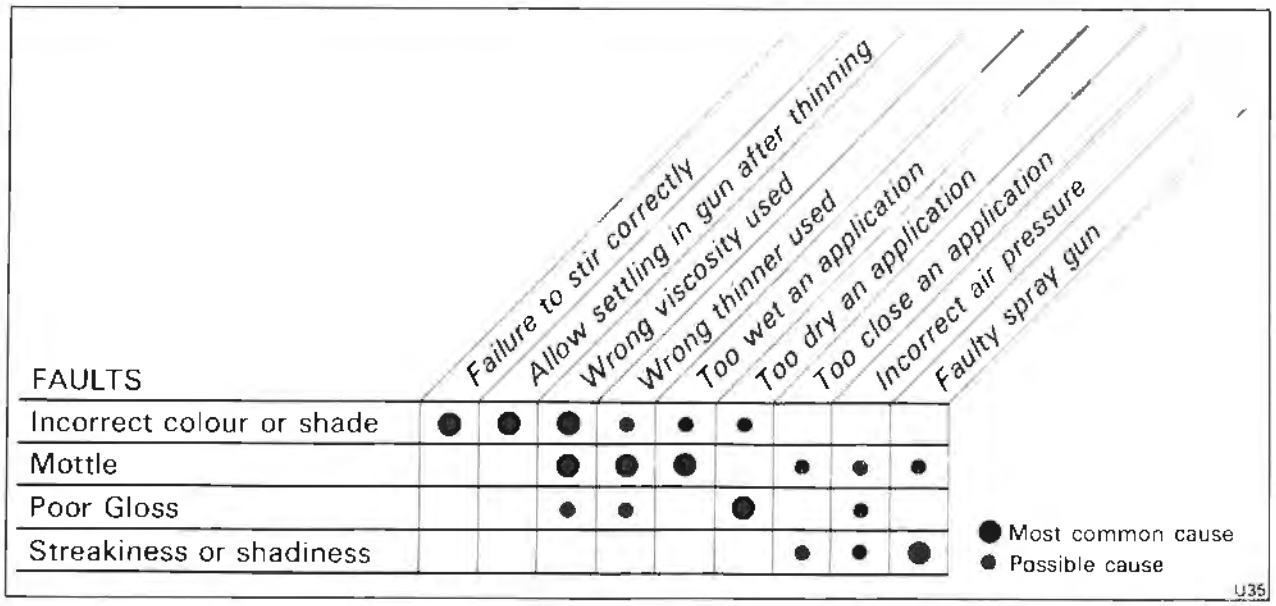

Fig. S49 Metallic paints – common application faults

Surface preparation

General information

Correct surface preparation is the solution to successful paint rectification and respraying. Any work undertaken can only be as good as the efficiency of this preparation.

Prior to any painting being undertaken, the whole of the car should be washed with water to remove road dirt. This will enable areas that require painting to be examined properly.

Deterioration of paint films usually takes place more rapidly on horizontal surfaces. An examination of the roof, bonnet and luggage compartment lid will often be a good guide to the overall condition of the paintwork, look carefully for any kind of film breakdown. Failure to recognise paint faults at this stage will almost inevitably lead to a failure of the final paint finish both in terms of clearance and durability.

Having removed any damaged paint film, thoroughly clean and degrease all surfaces to be painted, both bare metal and existing paint film (see Fig. S46). **The importance of this operation cannot be over-emphasised.** If it is not carried out efficiently, it will almost invariably lead to an early breakdown of the finished paintwork.

To ensure adhesion and good durability, the surface must be thoroughly degreased to remove all traces of dirt, traffic film, wax, grease and oil. The correct method of achieving this is to use a proprietary degreasing fluid. **Petrol should not be used** as many modern motor fuels contain additives which can produce contamination.

Apply the cleaning solvent liberally using clean cloths (see Fig. S46). **Do not** pour on solvents and leave them to dry. All areas must be wiped dry with clean cloths.



Fig. S50 **Hand flatting a curved area using a soft pad**

Flatting

The purpose of flatting is to obtain a level surface and to provide the 'key' which is essential for good intercoat adhesion.

Care must be taken when carrying out this very important operation. Failure to flat adequately can create intercoat adhesion problems. Excessive flatting with coarse paper will produce deep scratches which will become apparent when the finishing coat is applied.

Flatting can be carried out by hand or by a machine sander and either wet or dry.

When flatting the following points should be noted.

1. Hand flatting should always be used on areas with curves or complex contours. Use a soft cloth pad inside wet or dry abrasive paper (see Fig. S50).
2. Short parallel strokes should be used with the hand positioned so that the fingers are at an angle to the direction of the stroke; this will prevent furrows being formed by the fingers.
3. A light medium pressure is all that is required, a heavy pressure will produce clogging of the paper and excessively deep scratches. A way of eliminating these scratches is to use progressively finer grades of paper as the paint system is built up.
4. On flat areas the use of a rubber, felt or cork block behind the paper will eliminate the effects of finger furrowing (see Figs. S51 and S52).



Fig. S51 **Using a hard rubber block to flat large areas of minimal contour**



Fig. S52 **Finger furrowing — an incorrect method of flatting**

Printed in England

© Rolls-Royce Motors Limited 1979

Note
During the flatting operations some bare metal areas are usually exposed, either due to the removal of a localised defect or because of a thin paint film. These areas must be feather edged (see Fig. S53). To do this, the paint edges surrounding the bare metal area should be flatted well back into the surrounding paint. They should taper gradually from the metal so that the finger tips can feel no break or ridge between the metal and the surrounding paintwork.



Fig. S53 A method of checking the feather edge after flatting

5. When using wet or dry abrasive paper, it is important that plenty of clean water is used, this ensures that the paper cuts freely and eliminates dust.
6. Flatting water, should never be allowed to evaporate naturally as residues could remain. These would eventually cause blistering.
7. On completion of the flatting of each panel, the areas should be thoroughly hosed off with clean water, then dried immediately with clean cloths.

Note
Lubricated abrasive papers are available for dry flatting and as the lubricant is usually a stearate, cleaning of the flatted surface is even more essential. Any residue of lubricant left on the surface could lead to poor adhesion.

Metal pretreatment
1. Ensure that all bare metal areas are thoroughly degreased and completely free of rust. If rust is present it should be removed using a proprietory phosphoric acid metal cleaner.
2. Apply a thin coat of acid etch primer to all bare metal surfaces (see Fig. S40). Care should be taken to avoid applying this material in too great a quantity to the surrounding paintwork.

Masking
Careful masking can mean the difference between a reasonable paint finish and a first class finish (see Fig. S54).

Only the best quality materials, both paper and tape should be used. The paper should have a good wet strength and have no loose fibres. **Do not** use newspaper, it does not possess the correct properties. Also, printing inks are soluble in some of the solvents in paint and therefore can cause staining.

Tapes of various widths should be kept in stock, using the narrower tapes on difficult curved areas as it is easier to manipulate (see Fig. S55).



Fig. S54 Typical masking preparation before paint



Fig. S55 A method of detail masking to minimise tape edges

Printed in England
© Rolls-Royce Motors Limited 1979

Spraying techniques, application faults and remedies

General spraying techniques

Spray painting is a craft, as is any other method of painting. With the correct knowledge and use of spray gun techniques a surface can be given a first class coating in the minimum amount of time. It also greatly reduces paint wastage and creates less fatigue for the operator.

Many jobs have been spoiled because of the operator not understanding the correct technique or by disregard of its value. It cannot be too strongly emphasised that a little time spent in study and practice will be amply repaid by the greatly improved quality of finishes obtained along with the saving of time and material.

Spraying techniques vary considerably from person to person, however the following points are of particular importance.

1. The paint can be applied in single or double coats.
2. Single coats give a rapid solvent release with fast through drying.
3. Double coats give good flow, gloss build-up and freedom from dry spray.
4. Whatever type of coat is applied, adequate time must be given between coats for solvent to evaporate. Inadequate 'flash-off' times will result in an excessive amount of solvent remaining in the film. This will produce slow hardening through the film. Also, it may affect the durability of the paint system should the vehicles be put into humid conditions too quickly.
5. Recommended 'flash-off' times apply to average working conditions. If conditions are cold and/or damp the 'flash-off' may need to be increased. Conversely in hot dry conditions a shorter 'flash-off' time may be adequate.

It is also important to allow adequate 'flash-off' time if force drying, using either infra-red lamps or a low stoving oven. If heat is applied too soon, excess solvent in the paint film may boil resulting in solvent popping and pin holes.

Planning

Plan the spraying sequence carefully before starting work. Ensure that continuity is achieved to maintain a wet edge and eliminate dry overlap joints. It is advisable to spray door edges, luggage compartment channels, bonnet edges, etc., first as this has the effect of laying down any dust which could blow out and spoil the final finish.

Spray painting equipment

To understand spray painting, the following basic items that make up the spray equipment must be examined.

1. Air compressor. Initially, compressed air is required. This is obtained from an air-compressing plant which may be powered by an electric motor, a petrol (see Fig. S56) or diesel engine.
2. Air transformer. It is necessary to 'condition' the compressed air for use with a spray gun or allied equipment. This conditioning means filtering the air to remove dirt, oil and moisture, together with reducing the air pressure to that required for spray operation. This is generally done by a filter and regulator or a combination of the two called an air transformer (see Fig. S57). On portable air-compressing plants the transformer is usually fitted to the plant.

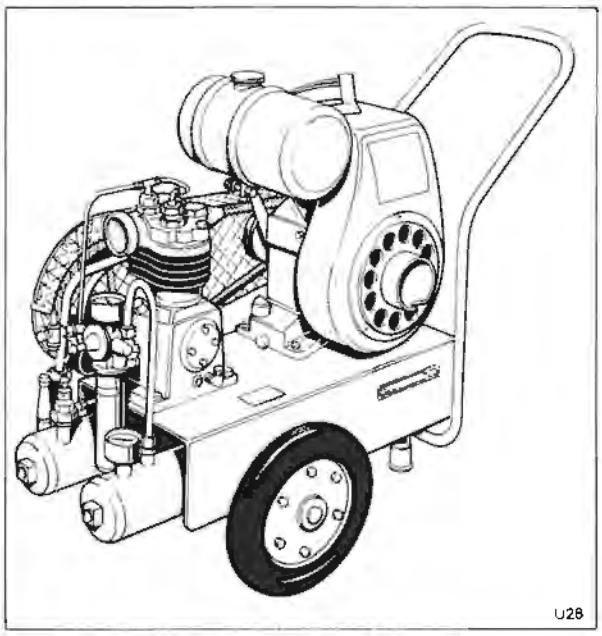

Fig. S56 Petrol driven portable air compressing plant for one operator

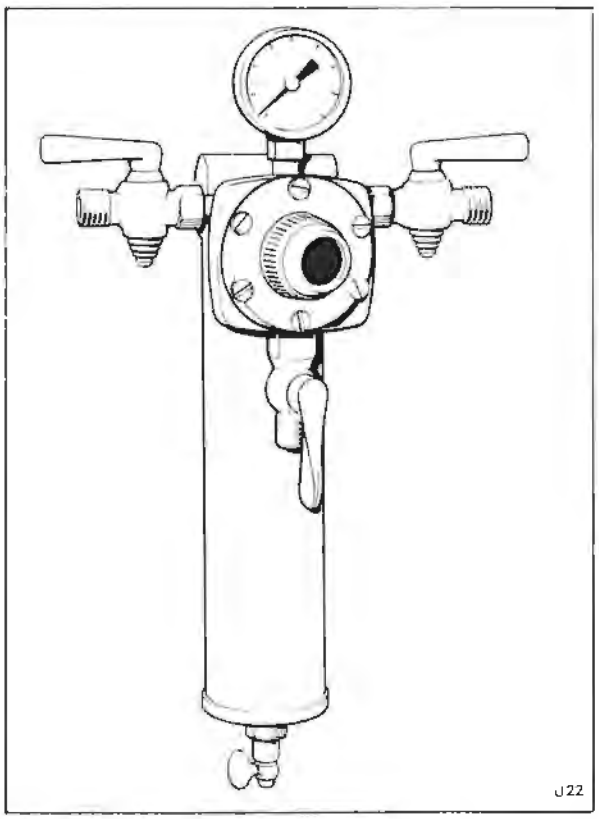

Fig. S57 A typical air transformer

3. Air hose. Clean, dry compressed air regulated to the required pressure is conveyed to the spray gun through the air hose.
4. Paint container. The paint may be in a container attached to the spray gun, or it may be contained in a separate pressure feed tank and forced by air pressure through a length of fluid hose to the spray gun.
5. Spray gun. The spray gun, although at the end, is really the heart of the system. It is the tool with which the paint is applied to a surface.

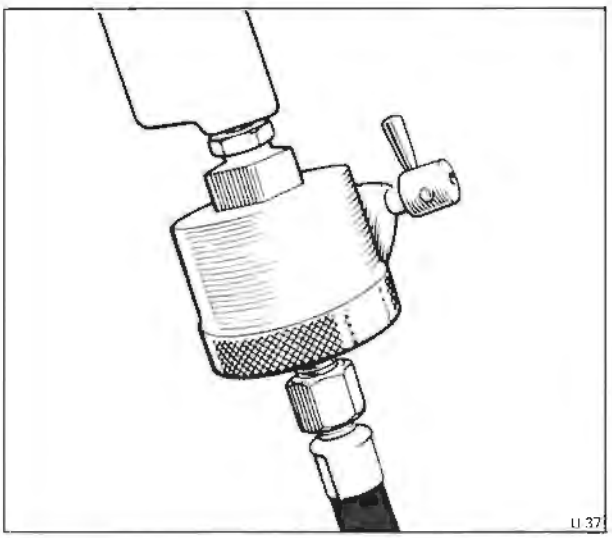

Fig. S58 A small lightweight filter

Air compressor

The compressor takes the air in at atmospheric pressure, compresses it and stores it in an air receiver at a higher pressure.

It is strongly recommended, that the use of a compressor made by a reputable firm expressly for the purpose of spray painting should be used otherwise problems can occur. The compressor must be capable of maintaining a steady pressure for long periods, all day if necessary, without developing heat and delivering hot compressed air. It is a fact that the action of compressing air generates heat in itself, but in a properly designed air compressor this generated heat is dissipated and the compressed air delivered at normal atmospheric temperature.

An air receiver is used to store the air for a cooling off period, and its capacity should be in proportion to the size of the compressor. In cooling the air the receiver permits the moisture and all vapour entrained in the

Size of air hose inside diameter	Air pressure drop at spray gun					
	1,52m. (5.0ft) length	3,04m. (10.0ft.) length	4,57m.(15.0ft.) length	6,09m. (20.0ft.) length	7.62m. (25.0ft) length	15,24m. (50.0ft) length
6,35 mm. (0.250 in.)						
at 2,81 kgf/sq cm. (40 lbf/sq in.)	0,42 kgf/sq cm (6.0 lbf/sq in.)	0,56 kgf/sq cm (8.0 lbf/sq in.)	0,66 kgf/sq cm (9.5 lbf/sq in.)	0,77 kgf/sq cm (11.0 lbf/sq in.)	0,89 kgf/sq cm (12.75 lbf/sq in.)	1,68 kgf/sq cm (24.0 lbf/sq in.)
at 3,51 kgf/sq cm. (50 lbf/sq in.)	0,52 kgf/sq cm (7.50 lbf/sq in.)	0,70 kgf/sq cm (10.0 lbf/sq in.)	0,84 kgf/sq cm (12.0 lbf/sq in.)	0,98 kgf/sq cm (14.0 lbf/sq in.)	1,12 kgf/sq cm. (16.0 lbf/sq in.)	1,96 kgf/sq cm (28.0 lbf/sq in.)
at 4,21 kgf/sq cm. (60 lbf/sq in.)	0,63 kgf/sq cm. (9.0 lbf/sq in.)	0,87 kgf/sq cm (12.5 lbf/sq in.)	1,01 kgf/sq cm. (14.5 lbf/sq in.)	1,17 kgf/sq cm (16.75 lbf/sq in.)	1,33 kgf/sq cm. (19.0 lbf/sq in.)	2,17 kgf/sq cm. (31.0 lbf/sq in.)
at 4,92 kgf/sq cm. (70 lbf/sq in.)	0,75 kgf/sq cm (10.75 lbf/sq in.)	1,01 kgf/sq cm. (14.5 lbf/sq in.)	1,19 kgf/sq cm (17.0 lbf/sq in.)	1,37 kgf/sq cm (19.5 lbf/sq in.)	1,58 kgf/sq cm (22.5 lbf/sq in.)	2,39 kgf/sq cm. (34.0 lbf/sq in.)
at 5,62 kgf/sq cm. (80 lbf/sq in.)	0,86 kgf/sq cm (12.25 lbf/sq in.)	1,16 kgf/sq cm. (16.5 lbf/sq in.)	1,37 kgf/sq cm (19.5 lbf/sq in.)	1,58 kgf/sq cm (22.5 lbf/sq in.)	1,79 kgf/sq cm (25.5 lbf/sq in.)	2,60 kgf/sq cm (37.0 lbf/sq.in.)
at 6,32 kgf/sq cm. (90 lbf/sq in.)	0,98 kgf/sq cm (14.0 lbf/sq in.)	1,31 kgf/sq cm (18.75 lbf/sq in.)	1,54 kgf/sq cm (22.0 lbf/sq in.)	1,77 kgf/sq cm (25.25 lbf/sq in.)	2,03 kgf/sq cm 29.0 lbf/sq in.)	2,77 kgf/sq cm (39.5 lbf/sq in.)
7,93 mm. (0.312 in.)						
at 2,81 kgf/sq cm. (40 lbf/sq in.)	0,15 kgf/sq cm. (2.25 lbf/sq in.)	0,19 kgf/sq cm (2.75 lbf/sq in.)	0,22 kgf/sq cm (3.25 lbf/sq in.)	0,24 kgf/sq cm (3.5 lbf/sq in.)	0,28 kgf/sq cm (4.0 lbf/sq in.)	0,59 kgf/sq cm (8.5 lbf/sq in.)
at 3,51 kgf/sq cm. (50 lbf/sq in.)	0,21 kgf/sq cm (3.0 lbf/sq in.)	0,24 kgf/sq cm (3.5 lbf/sq in.)	0,28 kgf/sq cm (4.0 lbf/sq in.)	0,31 kgf/sq cm (4.5 lbf/sq in.)	0,35 kgf/sq cm. (5.0 lbf/sq in.)	0,70 kgf/sq cm (10.0 lbf/sq in.)
at 4,21 kgf/sq cm. (60 lbf/sq in.)	0,26 kgf/sq cm (3.75 lbf/sq in.)	0,31 kgf/sq cm (4.5 lbf/sq in.)	0,35 kgf/sq cm 5.0 lbf/sq in.)	0,38 kgf/sq cm (5.5 lbf/sq in.)	0,42 kgf/sq cm. (6.0 lbf/sq in.)	0,80 kgf/sq cm. (11.5 lbf/sq in.)
at 4,92 kgf/sq cm. (70 lbf/sq in.)	0,31 kgf/sq cm (4.5 lbf/sq in.)	0,36 kgf/sq cm. (5.25 lbf/sq in.)	0,42 kgf/sq cm. (6.0 lbf/sq in.)	0,47 kgf/sq cm (6.75 lbf/sq in.)	0,50 kgf/sq cm. (7.25 lbf/sq in.)	0,91 kgf/sq cm. (13.0 lbf/sq in.)
at5,62 kgf/sq cm. (80 lbf/sq in.)	0,38 kgf/sq cm (5.5 lbf/sq in.)	0,43 kgf/sq cm. (6.25 lbf/sq in.)	0,49 kgf/sq cm (7.0 lbf/sq in.)	0,56 kgf/sq cm (8.0 lbf/sq in.)	0,61 kgf/sq cm (8.75 lbf/sq in.)	1,01 kgf/sq cm. (14.5 lbf/sq in.)
at 6,32 kgf/sq cm. (90 lbf/sq in.)	0,45 kgf/sq cm (6.5 lbf/sq in.)	0,52 kgf/sq cm (7.5 lbf/sq in.)	0,59 kgf/sq cm (8.5 lbf/sq in.)	0,66 kgf/sq cm (9.5 lbf/sq in.)	0,73 kgf/sq cm. (10.5 lbf/sq in.)	1,12 kgf/sq cm. (16.0 lbf/sq in.)

U34

Fig. S59 Table of air pressure drop

compressed air to condense; in this condition they can be easily separated from the air. The air receiver also completely blankets out pulsations from the compressor so that compressed air is drawn from the receiver at a steady, even pressure.

A compressor delivering approximately 0,14 cu.m. to 0,19 cu.m. (5 cu.ft. to 7 cu.ft.) per minute is recommended as the minimum requirement for one operator. This provides a maximum output pressure of 5,62 kgf/sq.cm. (80 lbf/sq. in.).

It should be noted that some manufacturers quote the volume of displacement of their compressors. On no account should this figure be confused with the volume of air delivered, as in all cases the latter figure is lower than the former. For example, a compressor quoted as having a displacement of 0,25 cu.m. (8.95 cu.ft.) of air per minute delivers only 0,19 cu.m (6.98 cu ft.) of air per minute. The air pressure required to give an effective finish with a spray gun varies with the painting material used, and to a certain extent on the type of spray gun. Air pressure is very widely understood and appreciated. However air volume which is equally important, is very often completely overlooked until the lack of it is betrayed by falling air pressure whilst spraying.

Where it is necessary to operate two or three guns simultaneously from one air compressor, larger plants are necessary and these can be powered by either electric, petrol or diesel motors.

Another very important point is that compressed air for the spray gun must be absolutely clean and free from moisture, dirt and oil, any of which would ruin a sprayed surface. A standard air compressing plant for spray painting work is normally fitted with an air intake filter to prevent dust entering the compressor. Also, a compressed air filter is usually incorporated in an air transformer.

Air transformer (see Fig. S57)

An air transformer consists of two units, a condenser or filter for removing oil and moisture from the air and a pressure regulator. The condenser allows the air to expand into a chamber, thus cooling the air. It then removes the moisture and oil by means of an easily removable filter. A cock is fitted to draw off the accumulated impurities at suitable intervals. The regulator is actually a reducing valve which regulates the air pressure from the compressor to that required for spraying. A transformer should be fitted with a gauge giving an accurate reading of the pressure of air which has passed through the regulating valve.

In circumstances where exceptionally humid air is compressed and moisture tends to settle in the air hose between the spray gun and the transformer, a small lightweight filter (i.e. Dryit) can be fitted directly on to the handle of the gun as a final safeguard against water settling on the work (see Fig. S58).

Air hose

Compressed air is fed to the spray gun by the air compressor, through a suitable length of pressure-resisting air hose. The internal diameter and length of the air hose used has a marked effect on the efficient performance of the spray gun and the quality of the coating it produces.

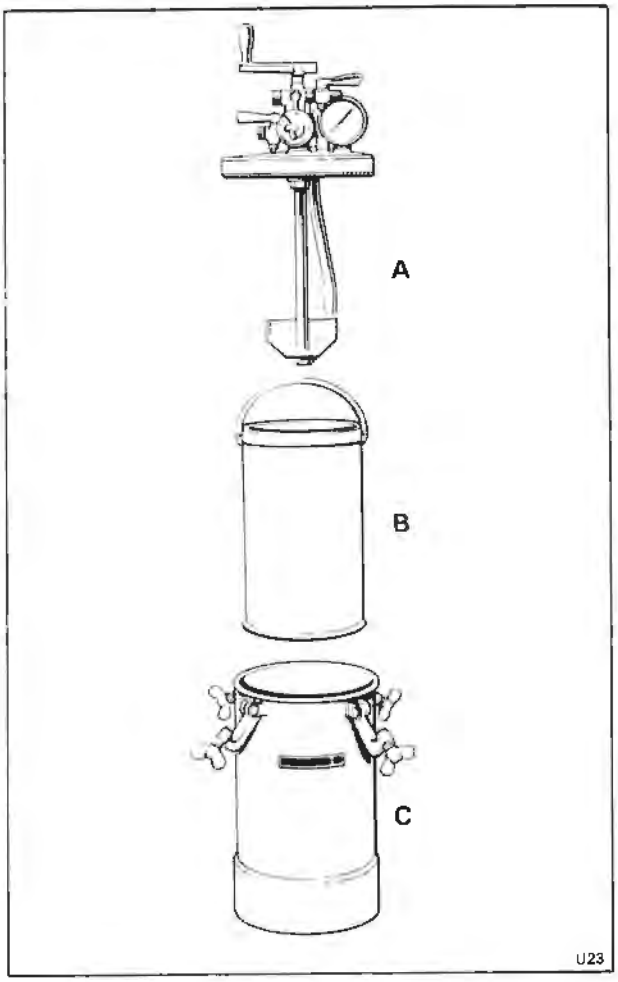

Fig. S60 Pressure feed paint tank

- **A** Hand agitator
- **B** Insert container
- **C** Tank

Correct hose sizes for compressed air are essential.

Too often a spray gun is blamed for functioning improperly, or a material is considered of inferior quality, when the real cause of the trouble is an inadequate supply of compressed air at the gun. Frequently operators believe they are using an extremely high air pressure, but investigation reveals that, due to a small hose size or extra long length, pressure is inadequate for proper atomization.

The interior wall of air hose is smooth, even so it creates a certain resistance to the flow of air, particularly when a long length is used.

Air hose is available in a range of bore sizes and Figure S59 shows the approximate pressure drop from various lengths of 6,35 mm. (0.250 in.) and 7,93 mm. (0.312 in.) air hose when used with a spray gun consuming approximately 0,33 cu.m. (12 cu. ft.) of air per minute at 4,21 kgf/sq.cm. (60 lbf/sq.in.) pressure. Air hose with 6,35 mm. (0.250 in.) bore should never be used in lengths exceeding 3,65 m. (12 ft.) and is intended only for medium and light duty spray guns.

Printed in England

© Rolls-Royce Motors Limited 1979

Paint container

There are three methods of paint feed in general use.

1. **Suction feed,** where a paint container is attached to the gun below the level of the nozzle. The paint is syphoned from the cup by the compressed air passing through the spray gun. The capacities are usually 0,56 litres (1pt.) or 1,13 litres (2 pt.).
2. **Gravity Feed,** where the paint container is attached to the top of the spray gun. The paint flows into the nozzle by the force of gravity. The gun operates at a lower air pressure than the suction feed type and will handle heavier bodied materials.
3. **Pressure feed.** In this system the paint container is a pressure feed tank (see Fig. S60), separate from the gun, and may have a capacity of between 9,09 litres and 181,83 litres (2 gal. and 40 gal.). Certain containers have a larger capacity. The paint is conveyed to the gun through a length of flexible fluid hose.

The principle of pressure feed is the application of low air pressure on the material in the tank so that it is forced through fluid hose to the spray gun. Air pressure is controlled by an air regulator on the lid. Also, a pressure gauge is provided.

Pressure feed tanks are, in many cases, provided with a light insert container (see Fig. S60). This greatly facilitates cleaning and change of material; some tanks can be mounted on a castor base, making removal from place to place an easy matter. The tanks are strongly constructed to avoid any risk of distortion under pressure and are usually galvanised inside and outside. The lid is secured by clamps and is fitted with a gasket to prevent air leakage. There is a safety valve, an air release valve and at least one air and one fluid draw-off cock. On the larger size tanks there are two or three extra air and fluid cocks, so that the tank can be used by more than one operator. Provision is made for a hand operated agitator to keep the material properly mixed (see Fig. S60), and for large capacity tanks it is advisable to have an agitator driven by a compressed air motor (see Fig. S61).

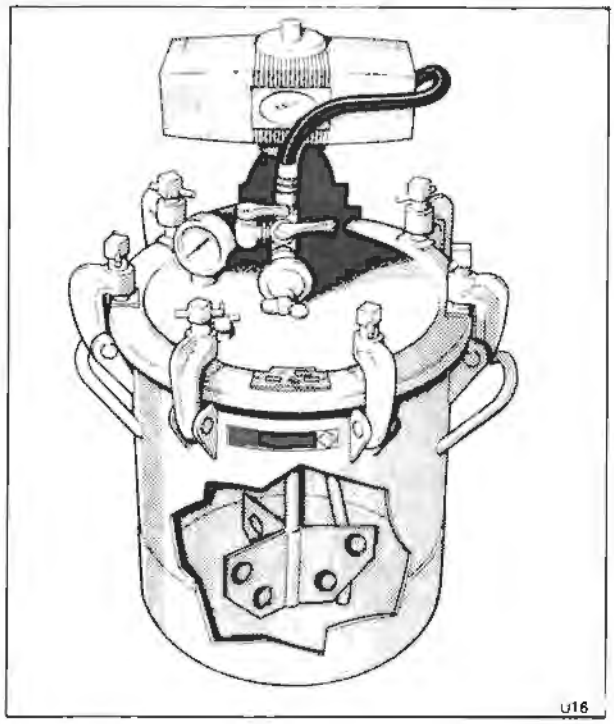

Fig. S61 Pressure feed paint tank with an air motor driven agitator

The air motor ensures that the paint is kept at a constant consistency, even during periods when the gun is not used. It consumes less than 0,028 cu.m. (1 cu.ft.) of air per minute, but where a number of them are likely to be used, provision must be made for them by selecting a compressor which will supply more than the maximum volume of air required by the spray guns.

Pressure feed cups of 1,13 litres (2 pt.) capacity are also available which attach to the gun itself for spraying comparatively small volumes of heavy material.

In all cases where large quantities of the same material have to be applied, the use of a pressure feed tank is strongly recommended for the following reasons.

a. A very large amount of work can be carried out before refilling is necessary.
b. The spray gun may be turned to any angle to coat the work effectively.
c. The material is supplied to the gun in greater volume than by any other method, particularly if heavy paints are used.
d. Less air pressure is required to obtain the correct speed of operation.
e. Paint wastage and losses by evaporation are eliminated.

Remote cup

Remote cup equipment combines all the advantages of standard pressure feed equipment. In addition, it has the advantage of being portable similar to the smaller paint containers attached directly to the gun. The kit (see Fig. S62, item F), consists of a 2,27 litres (4pt.) pressure feed cup fitted with sensitive controls to balance air and fluid flow. It is connected to the gun by 1,22m. (4.0ft.) lengths of air and fluid hose; therefore the gun can always be held at the correct angle to any surface for uniform coverage and reduced overspray. It has a convenient carrying handle and is ideal for work that requires up to half a gallon of paint.

Paint pumps

For large volume work fluid pumps driven by compressed air are available. These pumps supply paint to the spray guns directly from the manufacturer's container. The maximum flow of paint ranges from approximately 9,09 litres to 25,0 litres (2.0 gal. to 5.5 gal.) per minute.

Fluid hose

The best quality fluid hose should always be used. It is essential that the hose lining is solvent resisting and will withstand any softening effect from water, oil, turpentine, cellulose, synthetics and other painting materials. Do not use cheap hose, after a while the lining will disintegrate and fragments will spoil the finish and choke the spray gun.

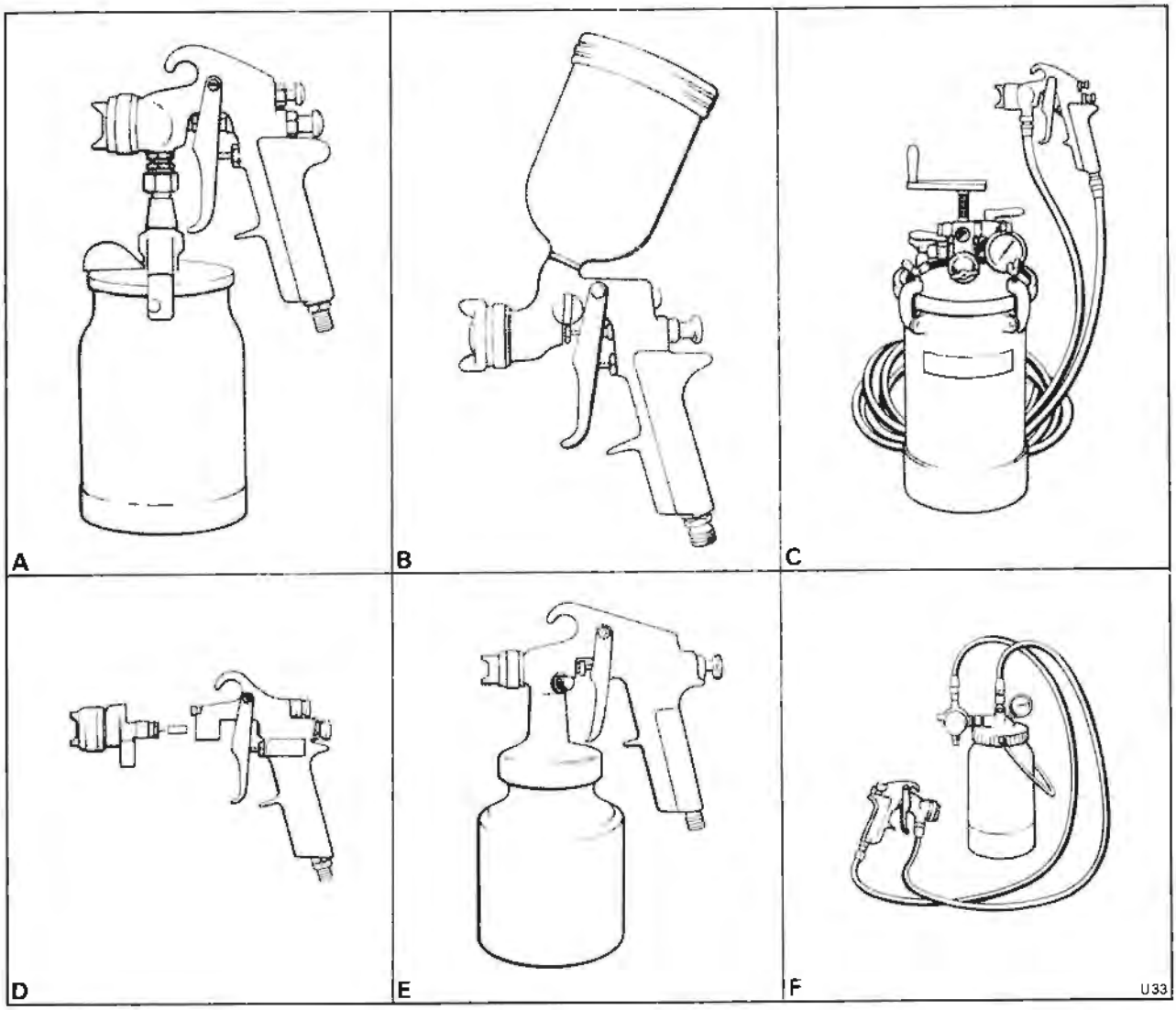

Fig. S62 Types of spray guns

- **A** Suction feed spray gun
- **B** Gravity feed spray gun
- **C** Spray gun with 9,09 litre (2 gal.) pressure feed tank
- **D** Spray gun with detachable spray head
- **E** Low air consumption gun
- **F** Remote cup outfit

Fluid hose of 9,52 mm. (0.375 in.) diameter, is recommended for paints of normal viscosity, but a 12,7 mm. (0.50 in.) diameter is necessary for heavier bodied mixtures and where longer lengths than 6,09m. (20ft.) are used.

Spray guns

The spray gun is the heart of the system and, as the success of spray painting depends to a very large extent on the efficiency of the gun, great care should be taken in selecting it. There are several types of guns available expressly designed to suit the type of work required. The most suitable gun for the operator is one used in high production manufacturing (see Figs. S63 and S64). It has the capacity for the work and its design is such that it will keep fully operational throughout the period of the working day. This type of gun is mainly used with pressure paint feed (see Fig. S62, item C). It can also be used with a suction feed cup for smaller jobs, provided the correct fluid tip and air cap are fitted to suit that method of paint feed (see Fig. S62, item A).

Gravity feed spray guns are also very popular for painting smaller areas because of the ease with which they can be refilled and cleaned. They cannot be used for spraying upwards on car roofs, etc. (see Fig. S62, item B).

If the volume of work justifies separate spray guns for each particular kind of job they should be obtained. The guns should be kept clean and in good working order, ready for use as the occasion arises instead of trying to make one gun serve all purposes. Time will be saved, as any change over from one kind of application to another can be achieved much more quickly.

A spray gun can be obtained, which has a spray head barrel complete with fluid inlet nipple, air cap, fluid tip

Printed in England
© Rolls-Royce Motors Limited 1979
October 1979
TSD 4200

and fluid needle that can be removed as a unit from the body of the gun. This spray gun has certain advantages for the operator who uses more different materials and changes of colour than any other tradesman (see Fig. S62, item D).

An internal mix spray gun (see Fig. S62, item E) mixes air and paint inside the air cap and is used with small air compressors which deliver a restricted volume of air at a comparatively low pressure of between 1,75 kgf /sq.cm. and 2,10 kgf /sq.cm. (25 lbf /sq.in. and 30 lbf /sq.in.). It is not advisable to use this spray gun for very quick drying materials.

Bleeder-type spray guns are designed for use with compressors of limited capacity and pressure, that have no unloader or pressure controlling device. The gun has no air valve and compressed air passes through it continuously, preventing any pressure build-up. In this type of gun the trigger controls only the flow of paint.

Volume spray guns use a very high volume of air, blown at very high speed through the gun, with no appreciable air pressure. This type of gun is suitable only for materials that flow easily, as the atomization is not as fine as that obtained with higher air pressure.

Principal parts of the spray gun (see Fig. S64)
The most important features of a spray gun are the following.

The fluid tip which meters out the paint.

The fluid needle which controls the flow of paint.

The air cap which atomizes the paint and forms the spray pattern.

It is important to remember that the different parts must be mated correctly together for the type of paint to be sprayed, the surface to be covered, the amount of compressed air available and the permissible speed. Very thin materials call for one combination. Viscous tacky paints require another and very heavy coarse and fibrous materials yet another. Thus the proper combination is essential if the best and most efficient performance is to be achieved.

The remainder of the spray gun consists of the body and handle, the trigger which actuates the fluid needle and the air valve, the spreader adjustment valve and the fluid adjustment screw.

The air valve, controlled by the trigger, starts and stops the flow of compressed air through the gun. The spreader adjustment valve controls the width of the spray pattern. The fluid adjustment screw sets a pre-determined maximum flow of paint by restricting the travel of the fluid needle.

Fluid tip (see Fig. S64)
When the gun is operated the paint flows from the fluid tip.

The rate of flow depends on the diameter of the hole or nozzle of the fluid tip, the pressure behind the paint and the viscosity of the paint itself. In selecting the fluid tip consideration should therefore be given to several important factors.

1. Heavy, coarse or fibrous materials require large nozzle sizes to permit passage of the material and prevent clogging.
2. It is recommended that viscous materials requiring high atomizing pressures are used through the small nozzle sizes which assure more complete atomization.
3. Very thin materials that 'sag' readily should be

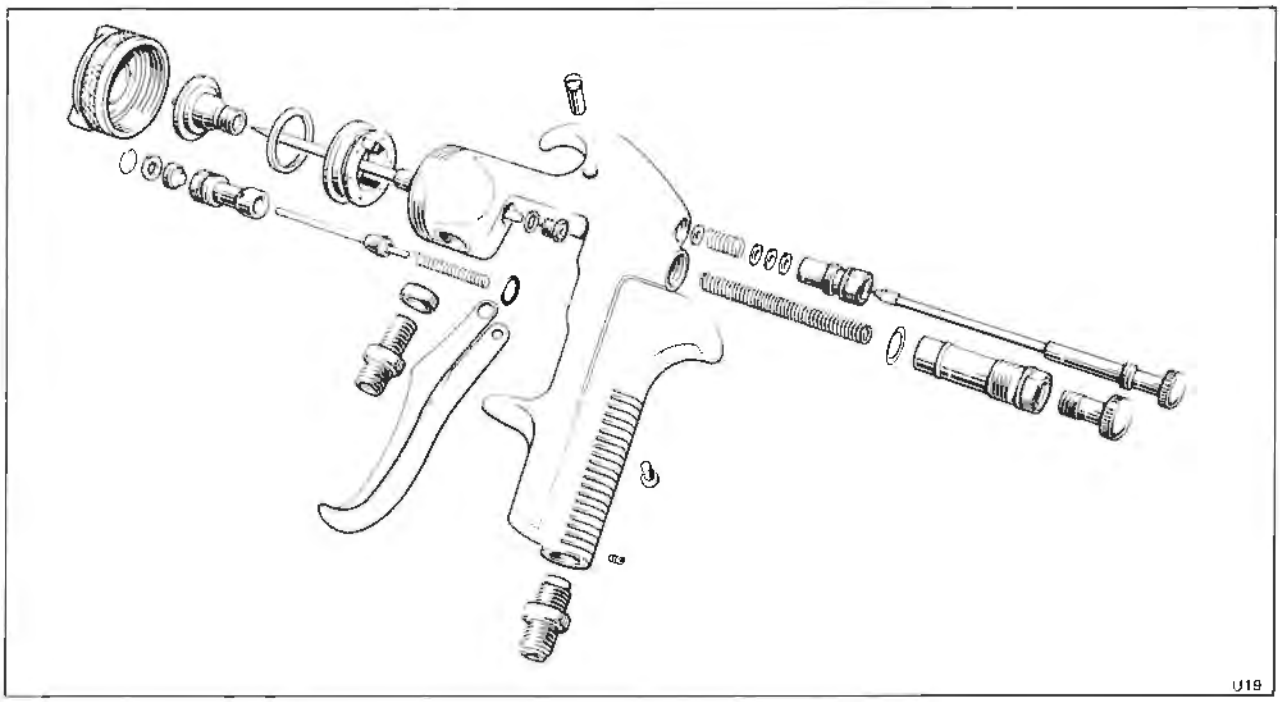

Fig. S63 A typical standard high speed spray gun (PA–JGA–502–1/P–JGA–502–1)

applied at low atomizing pressures with small nozzle sizes to prevent excessive material application.
4. Abrasive or corrosive materials must be handled with tips made of wear-resistant or non-corrosive metals.
5. The type of material feed to be used is important. The nozzle size sometimes recommended for pressure feed will not be satisfactory for suction feed although the converse does not apply.

Spray gun technique
Each kind of paint or finishing material has a different 'feel' or viscosity, some flow out easier than others, while some are very viscous or sluggish in their movement.

A good spray gun can quite easily produce a perfectly good finish with any of the wide variety of paints available, provided that.
1. The correct spray gun adjustments are made to suit the material.
2. That the paint itself is of reasonably good quality.

Cheap paints would not produce a good coating under any circumstances.

Spray gun adjustments
The all important spray gun adjustments are.
1. The volume flow of paint from the nozzle to suit the size of the area to be covered and the speed of operation required.
2. The correct proportioning of atomizing air pressure to the flow of material.
3. The proper spray width adjustment.

All these adjustments are inter-dependent, as they vary according to the viscosity of the paint, the volume and pressure of compressed air available and the sizes of areas to be covered.

Provided the spray gun is fitted with the correct size fluid tip to suit the type of material, adjustments to obtain the best results are made as follows.

Volume flow adjustment
The only mechanical adjustment possible with a gravity or suction feed spray gun is made by means of the fluid needle adjusting screw (see Fig. S64). Screwing this control inwards restricts the flow of material to the nozzle; screwing it outwards has the reverse effect. This adjustment should only be used when it is necessary to reduce the flow of paint temporarily. Turning in the adjusting screw increases the compression of the needle spring and makes the trigger harder to pull back. When a reduced flow of paint is required for a lengthy period this can easily be obtained by fitting a fluid tip with a slightly smaller size nozzle.

The flow of paint from a pressure feed tank to the spray gun is very accurately controlled by the air pressure regulator on the tank lid. The higher the air pressure in the tank the faster the flow of material; naturally a heavy paint requires greater air pressure than a lighter one. It should also be noted that the higher the gun is used above floor level the greater is the pressure needed to force the paint up to it.

Where long lengths of fluid hose are employed, a certain amount of friction resistance to the fluid flow has to be overcome by pressure adjustment.

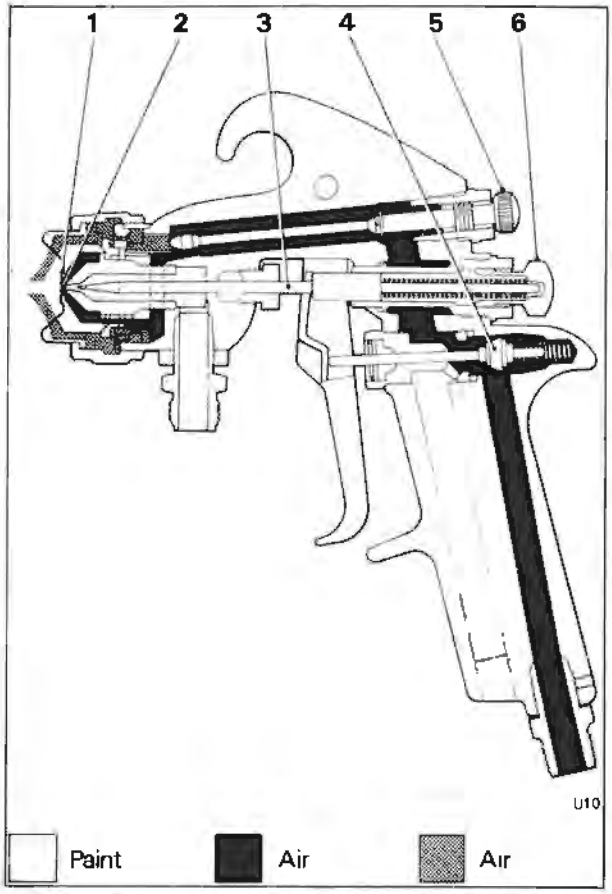

Fig. S64 Principal parts of a spray gun
1 Air cap
2 Fluid tip
3 Fluid needle
4 Air valve
5 Spreader control valve
6 Fluid needle adjusting screw

To obtain the correct adjustment of fluid pressure for any particular paint in the tank proceed as follows.
1. Hold the spray gun at normal working level and cut off the atomizing air supply from the gun by means of a cock stop on the tank.
2. Pull back the trigger to its fullest extent and gradually screw down the fluid regulating valve on the tank until the paint flows in a steady stream from the nozzle falling in an arc approximately 15,2 cm. (6.0 in.) from the gun.

Adjustment of the pressure from a fluid pump is controlled by raising or lowering the pressure of the air which drives the pump. If the paint is drawn from a circulating fluid line a fluid pressure control valve can be fitted into the line at the spraying point.

Atomizing air pressure adjustment
Having adjusted the paint flow for pressure feed spraying it is then necessary to determine the correct atomizing air pressure so that it will break up the paint stream finely and evenly.

The atomizing air pressure is adjusted by means of a regulator on the air transformer. This is usually fitted to

Printed in England
© Rolls-Royce Motors Limited 1979
September 1979
TSD 4200

the air receiver outlet on a portable air compressing plant. In some cases it is attached to the pressure feed tank starting with the air pressure regulator set at 3,51 kgf/sq.cm. (50 lbf/sq.in.) as shown on the controlled pressure gauge of the transformer. A series of trial panels should be sprayed, raising or lowering the air pressure by 0,35 kgf/sq.cm. (5 lbf/sq.in.) each time until the best results are obtained.

Too small an atomizing air pressure will produce a coarse grain effect. Too high a pressure will thin out the centre of the spray pattern and also cause wastage of paint in the form of fog and overspray.

Spreader adjustment

The spreader adjustment provides a means of changing the spray pattern from a round spray to fan sprays of various widths (see Fig. S65, items A and B).

Screwing the spreader adjustment valve fully in produces the round spray and as the control is unscrewed so the fan spray pattern develops and becomes wider. Spreader adjustment must balance the volume of fluid flow; if the spreader adjustment valve is open too wide it will split the spray pattern (see Fig. S65, item C).

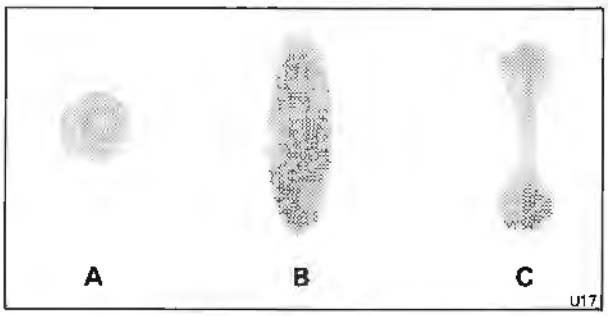

Fig. S65 **Spray patterns**
- A Round spray pattern
- B Fan spray pattern
- C Split spray pattern

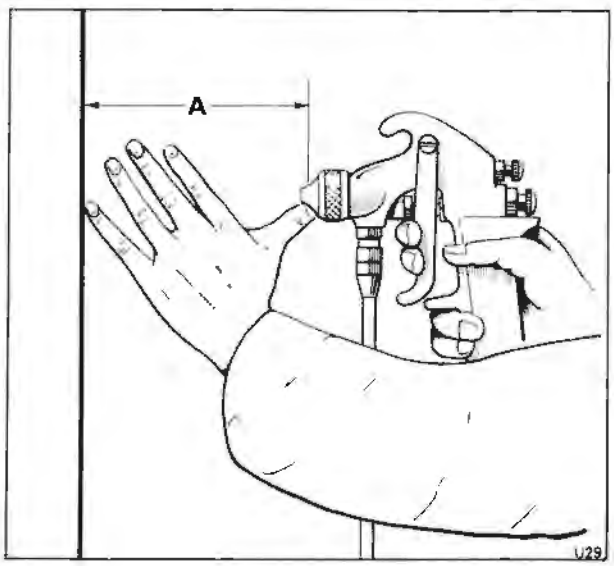

Fig. S66 **Quick guide to spraying distance**
- A 15,24 cm. to 20,32 cm. (6.0 in. to 8.0 in.)

Basic rules of spraying

The following are basic rules to be learned, assuming that the operator has the correct gun for the job, has mixed and strained his paint correctly and has adjusted the fluid and atomizing air pressures to suit the material and speed of operation required.

1. The spray gun should be held at right-angles to the surface to be sprayed. The distance between the surface and the face of the air cap should be between 15,24 cm. and 20,32 cm. (6.0 in. and 8.0 in.), or a hand span as a quick check (see Fig. S66).
2. Each stroke should be made with a free arm motion across the face of the surface with the wrist flexible so that the gun is kept at right-angles to the surface and at the correct distance from it.

The speed of each successive stroke must be constant so as to maintain a uniform thickness of coating. In order to prevent the build-up of paint on the surface at the beginning and end of each stroke, the movement of the gun should be started before the trigger is pulled. Similarly, the trigger should be released before the gun movement ceases at the end of the stroke. The spray gun trigger should always be handled smoothly and not pulled or released abruptly.

3. The edges of a spray pattern taper off slightly and to obtain even coverage of a surface it is essential to overlap the previous stroke by approximately 50%. It is recommended that the gun is aimed at the extreme edge of the previous stroke to ensure the required overlap.

Common faults

One of the faults that arises from using the incorrect spray technique is the waste of paint. For instance one method sometimes used is to pull the trigger and wave the gun over the surface until it is all one colour and then release the trigger. The result is a tremendous amount of spray fog which makes the operator almost the same colour as the panel he is spraying and the coating is very uneven. It may have developed runs and sags in places and, of course, very much more paint than necessary has been used.

These faults can easily be overcome by avoiding the errors in spray technique described as follows.

1. **Arcing the spray gun (see Fig. S67).** This is brought about by keeping the wrist rigid so that the gun is not pointing directly at the surface throughout the stroke. The result is an uneven coating and excessive overspray at each end of the stroke caused by the paint being deflected from the surface into the air. When the gun is arced through 45° from the centre, approximately 65% of the paint is lost, most of it creating spray fog.
2. **Tilting the spray gun (see Fig. S68).** If the gun is tilted during a stroke the spray pattern will be uneven and a certain amount of spray fog will form. The gun should always be held at right-angles to the surface.
3. **Holding the spray gun at the incorrect distance from the surface (see Fig. S69).** When the gun is held too close to the surface the paint is concentrated into a smaller area.

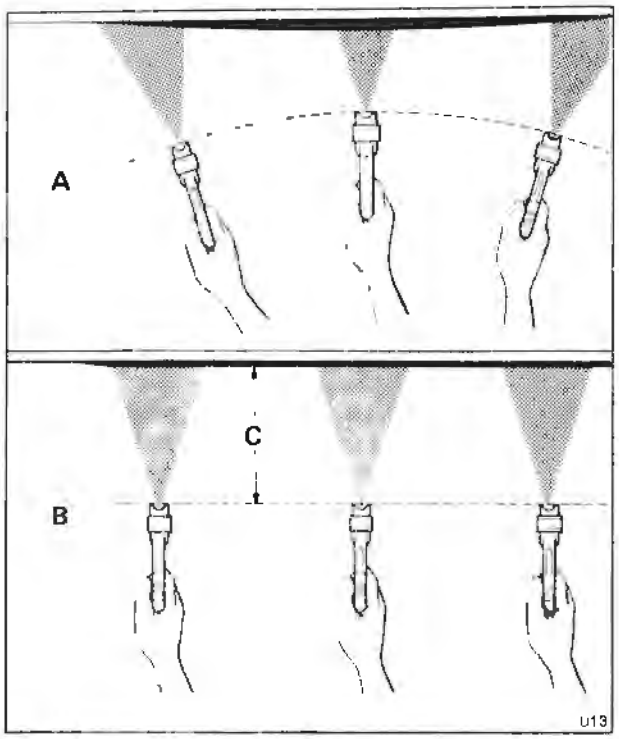

Fig. S67 **Arcing the spray gun**
- A Incorrect method
- B Correct method
- C 15,24 cm. to 20, 32 cm. (6.0 in. to 8.0 in.)

Unless the speed of the stroke is increased considerably the surface will be overloaded, probably causing runs and sags.

Where the gun is held too far from the surface more solvent is evaporated from the atomized paint, resulting in a coarse, dry coating that has an 'orange peel' finish. This is caused by lack of flow on the surface due to loss of solvent. For the same reason the coating loses some of its power of adhesion. When the atomized paint has an unnecessary distance to travel there is a certain amount of 'fall out' before it reaches the surface, thus causing a waste of paint and spray fog.

4. **Failure to trigger the gun correctly.** Continuously holding the trigger back while spraying a surface causes a heavy build-up of paint at the end of each stroke. This waste paint, leads to runs and sags. It also gives a very patchy finish.

Holding the trigger open in this manner also causes unnecessary fatigue, because the hand is constantly pulling against the compressed needle spring. The momentary relaxation of muscle tension during correct triggering action is much less tiring.

It should be noted that when regulating the fluid pressure the needle adjusting screw of the gun should be set fully open. This ensures the minimum compression of the needle spring for the fingers to pull against.

5. **Varying the speed of the stroke.** The speed of a stroke is closely co-related to the volume of paint flow. The fluid pressure should therefore be set compatible with the operator's natural speed of movement.

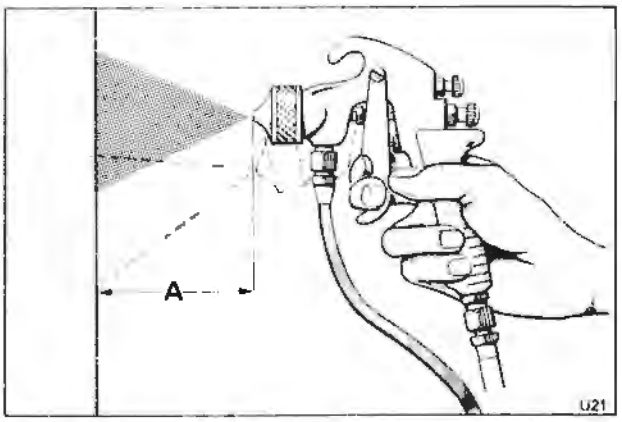

Fig. S68 **Tilting the spray gun**
- A 15,24 cm. to 20,32 cm. (6.0 in. to 8.0 in.)

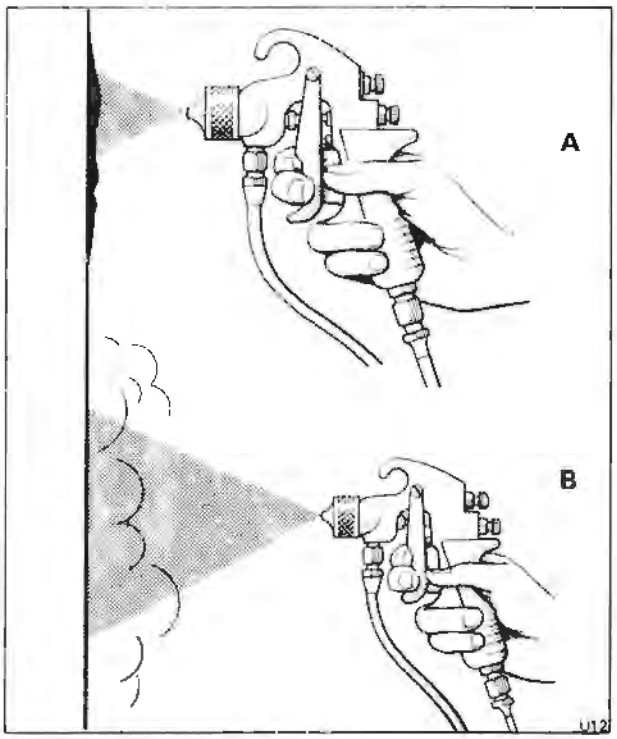

Fig. S69 **Effects of incorrect spraying distances**
- A Gun held too close – surface overloaded
- B Gun held too far away – poor finish, waste of paint and spray fog

Moving the gun too fast over the surface will give a poor coating. Too slow a stroke will overload the surface, making the finish 'liney'.

6. **Incorrect overlapping.** If strokes are too far apart and do not overlap by approximately 50% a streaky, patchy finish will result. Too great an overlap uses extra paint and can easily overload the surface.

7. **Quick pattern changer (see Fig. S70).** This fits on the spray gun in place of the fluid needle adjusting screw. It enables the operator to produce two fan pattern sizes whenever they are required. When fitted, a light pull on

Printed in England
© Rolls-Royce Motors Limited 1979
September 1979
TSD 4200

the spray gun trigger gives a narrow pattern for spraying edges and other small areas. Full movement of the trigger produces the conventional pattern for spraying larger surfaces.

Motion study

Once having mastered the spray technique it is necessary to learn the basic principles of motion study in order to obtain maximum efficiency in spraying with the minimum of fatigue.

It is not sufficient just to spray correctly, the operator should be able to decide the quickest way to complete a job so that the minimum number of gun strokes necessary to cover the surface adequately are used; at the same time avoiding paint wastage and reducing the moving of equipment to a minimum.

The following notes will assist the operator in acquiring practical knowledge on the art of motion study.

1. **Long work.** A long panel should be sprayed in separate sections between 45,72 cm. and 91,44 cm. (18.0 in. and 36.0 in.) long (see Fig. S71), triggering the gun in the usual manner at the ends of each stroke. Each section should overlap the previous section by approximately 10,16 cm. (4.0 in.).

When a long panel is comparatively narrow it can be sprayed with vertical strokes. This is sometimes the best system since stroke end laps are avoided. However most operators have a better control of the gun when using the more natural horizontal stroke.

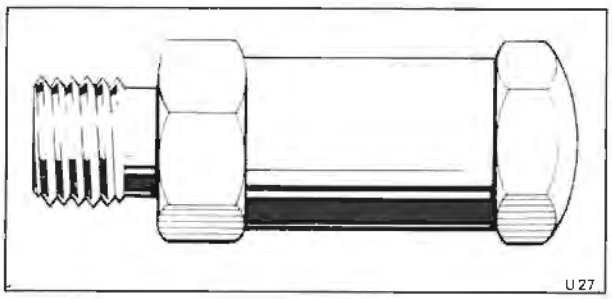

Fig. S70 Quick spray pattern changer

Never over-reach in spraying, always confine the stroke to a comfortable length, approximately 0,91 m. (3.0 ft.). Over-reaching inevitably means that the gun is angled, thus causing spray fog due to the paint being deflected from the surface.

It is advisable to practice spraying with either hand, as this will allow a larger area to be covered from one position and help to reduce fatigue.

2. **Outside corner spraying.** When spraying an outside corner the gun should be held directly facing the corner edge so that the adjoining surfaces are sprayed simultaneously (see Fig. S72). The spray pattern should be across the corner edge, i.e. the pattern must be horizontal for a vertical corner and vertical for a horizontal corner.

3. **Inside corner spraying.** There are two methods of spraying an inside corner. The spray gun can be pointed directly into the corner and the two adjacent surfaces sprayed together (see Fig. S73). The coating will not be uniform, but the technique is fast and satisfactory for most work.

When an even coating is required each face of the corner should be sprayed separately. After making the vertical stroke, short horizontal strokes should be used to coat the area adjacent to the corner. This avoids overspraying or double coating when the flat face of the panel is being sprayed.

4. **Slender open work.** Grilles and similar work should be sprayed so that the majority of paint covers the largest area at each stroke of the gun. Wire or other intricate work should be sprayed at an acute angle (see Fig. S74). It is recommended that a shield is used behind the wire, so that paint deflected from the shield will help to coat the back of the work.

When spraying slender panels, the rule is to make the spray pattern fit the job. A small horizontal pattern or a large vertical one will give complete coverage, with a minimum of overspray. However, it is a mistake to use too narrow a spray pattern on this kind of work as more strokes would be necessary, with probably too much overlapping.

Cleaning

Cleaning spray painting equipment is essential. Provided

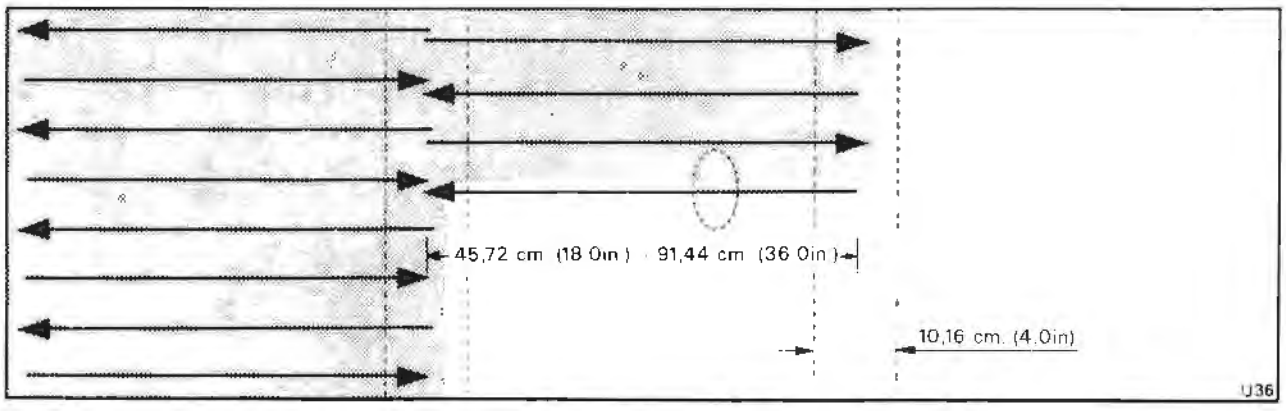

Fig. S71 Manageable distances when spraying long panels

Printed in England

© Rolls-Royce Motors Limited 1979

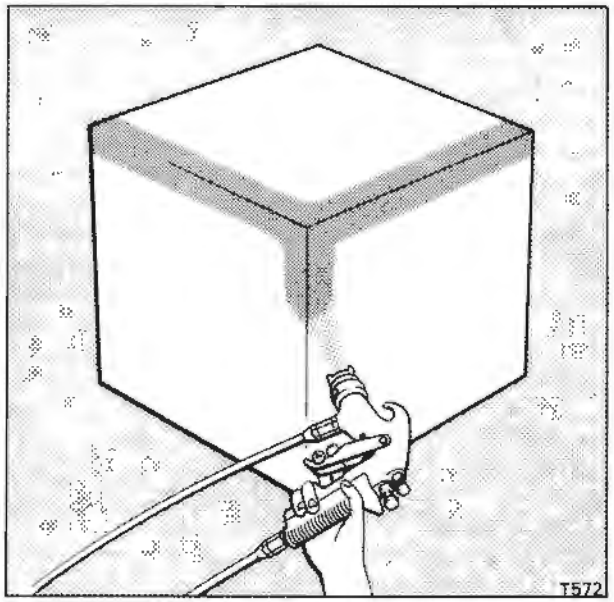

Fig. S72 Outside corner spraying

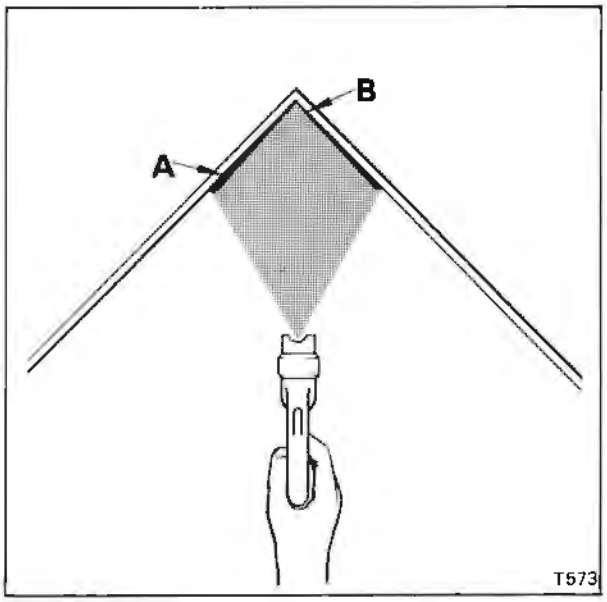

Fig. S73 Inside corner spraying
A Heavy
B Thin

it is done systematically and thoroughly, it will pay dividends in better spraying and trouble free spray gun performance. The habit should be developed of cleaning equipment promptly after spraying to avoid the possibility of having to remove hardened paint, particularly from the fluid tip and passages of the spray gun.

The cleaning fluid used must be suitable for the kind of paint that has been sprayed.

Note

A caustic solution must never be used for cleaning a spray gun or any other parts of the equipment, it will inevitably attack the metal of which they are constructed. Also, the spray gun must not be immersed in cleaning fluid, as this will destroy the lubricant in the fluid needle and air valve packings.

Cleaning the spray gun

1. **Suction feed gun.** After spraying and whilst the gun is still connected to the compressed air supply, loosen the cup. With the fluid tube still within the cup, hold a piece of cloth lightly over the centre hole of the air cap (see Fig. S75). Pull the trigger, the cloth pad will then turn back the compressed air through the fluid tube into the cup.

Empty the cup, allowing it a few moments to drain. Partially fill it with a suitable cleaning fluid and re-attach the cup to the gun. Spray the fluid through the gun in the normal way, but occasionally hold the cloth over the cap as before so that the cleaning fluid is surged backwards and forwards through the fluid passages, cleaning them thoroughly (see Fig. S75).

Remove the air cap from the gun and, having soaked it in cleaning fluid, rub it with a stiff brush. If any of the holes in the cap are blocked, probe them with a match stick, tooth pick or other soft implement (see Fig. S76). Do not attempt to clean these holes with a metal tool as irreparable damage to the cap could occur. The easiest way to dry the cap and the gun after cleaning is to hold it in a stream of compressed air.

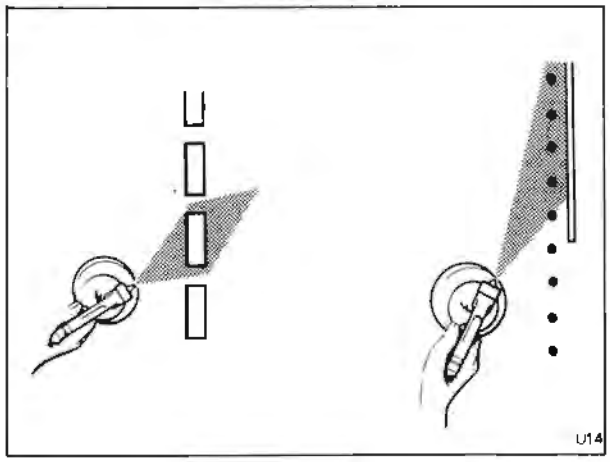

Fig. S74 Slender open work spraying

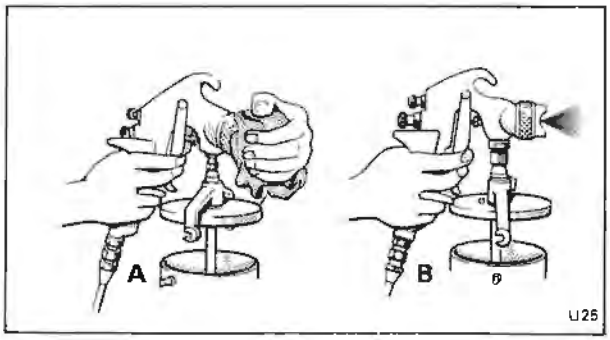

Fig. S75 Cleaning a suction feed spray gun
A turning the compressed air through the fluid tube into the cup
B Spraying cleaning fluid through the gun

September 1979

TSD 4200

Whilst the air cap is disconnected from the gun, ensure that the outside of the fluid tip is free of paint. Also, take careful precautions to ensure that the tip is not damaged while it is unprotected.

When the spray gun is re-assembled wipe it clean with a cloth soaked in cleaning fluid, also clean the inside and outside of the fluid cap. Always apply a drop of oil to the parts needing lubrication (see Fig. S77). Note that the fluid needle spring is lubricated with petroleum jelly or grease and this part will require only occasional attention.

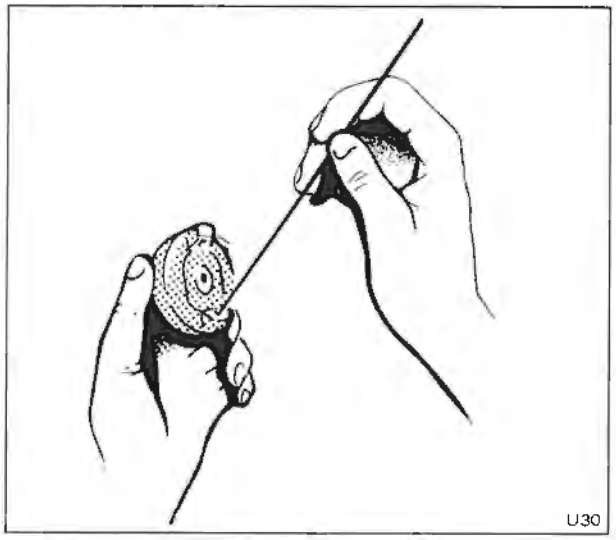

Fig. S76 Clearing holes in air cap

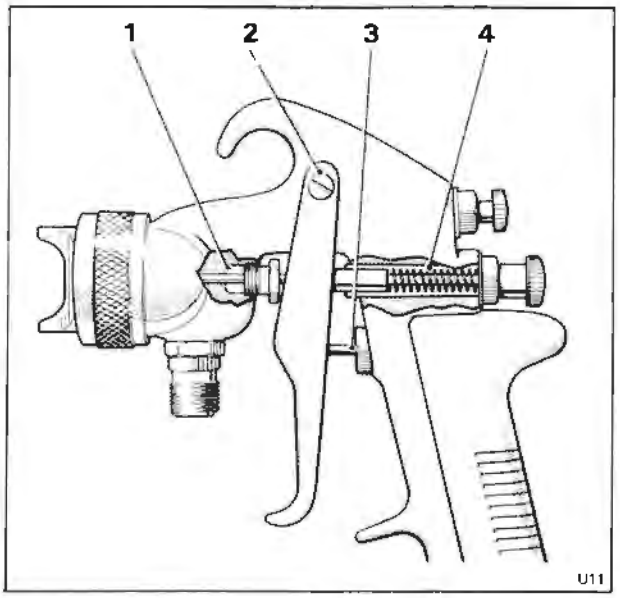

Fig. S77 Parts of a spray gun requiring lubrication

1 Fluid needle packing
2 Trigger fulcrum screw
3 Air valve stem and packing
4 Fluid needle spring

2. **Gravity feed gun.** The gravity feed gun should be cleaned in the same manner as the suction feed gun. Note that the lid is detachable and not the cup. When blowing back with a gravity feed gun take special care to ensure that the open top of the cup is turned away from the face as a certain amount of cleaning fluid is liable to be blown out of the cup.

3. **Gravity and suction feed cups.** In the lid of both gravity and suction feed cups there is a vent hole to allow air to enter the cup. This air replaces paint that is drawn out and it is essential that this vent hole is kept open as otherwise the paint will not flow out of the gun correctly. There is also a lid gasket which must be carefully cleaned to ensure that it functions correctly.

Cleaning the pressure feed system (see Fig. S78)

1. Clean the pressure feed system by turning off the cock supplying compressed air to the pressure feed tank and open the relief valve on the tank lid. This will release the air pressure within the tank.
2. Unscrew the clamps that hold the tank lid down.
3. Lift the tank lid and replace it slightly out of position so that atmospheric air is free to enter or leave the tank.

Turn the air cock on again and force the paint in the fluid hose back into the tank by holding a cloth over the spray gun air-cap (see Fig. S78).

4. Drain the paint from the fluid tank and replace it with cleaning fluid. Operate the gun ensuring that the fluid is sprayed and blown back until the hose and fluid passages are clean. Detach the hose from the gun and tank; allow both ends of the hose to drain into a receptacle.

Clean and lubricate the gun (see Cleaning the spray gun) and also clean the tank inside and out including the lid gasket. The air pressure regulating valve on the tank should be unscrewed until it feels free thus relieving the tension on the valve spring.

When the pressure feed equipment is to be used again, within a few hours, it is not necessary to clean it. Ensure that the parts are left connected, with the fluid hose full of material. Also ensure that the lid of the pressure feed tank is tightly secured.

Hose and equipment cleaner

A special 9,09 litres (2 gal.) tank which will contain cleaning solvent provides a quick, simple means of cleaning hoses and equipment. It operates by compressed air and provides a finely atomized blast of solvent which travels through the passages of guns, tanks, hoses, etc. Air and fluid valves permit a mixture variation of air and solvent. Also, the valves allow either air or solvent to be used separately.

Cleaning other equipment

Equipment other than the spray gun and tank should always be kept scrupulously clean to ensure their constant efficiency.

1. To ensure that any dust or loose material is removed, the air hose should always be blown out with compressed air before it is attached to the gun. Keep the outside of the fluid hose free from accumulation of material. The life of the hose depends upon the care given to it.

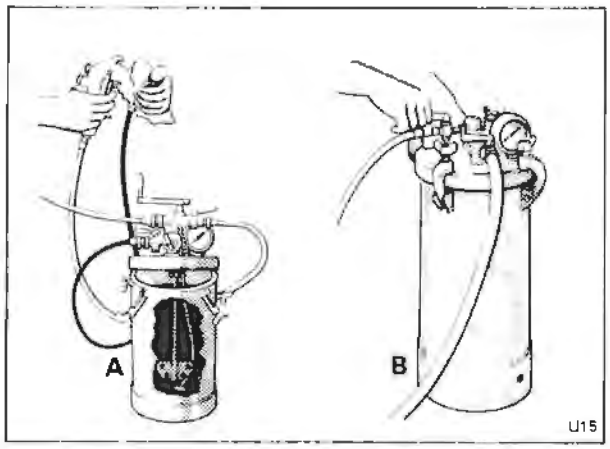

Fig. S78 Cleaning the pressure feed system
- A Forcing paint in the fluid hose back into the tank
- B A 9,09 litre (2 gal.) tank for holding cleaning solvent to clean all hose and equipment

2. Ensure that hose connections are clean and not damaged; if they cannot seat correctly leakages will occur at the connection, causing waste of air or paint.
3. The oil level in the air compressor sump should be inspected regularly and, if necessary, topped-up with the oil recommended by the manufacturer. The oil in the sump should be renewed periodically; the interval dependent upon the amount of time the compressor has been used.
4. Another feature of the air compressor is the air inlet which usually contains a filter. This filter must be kept scrupulously clean and the filtering medium within it replaced when it becomes laden with dirt.
5. The air receiver is fitted with a drain cock which should be opened at least once a day, with the compressor running, to blow out accumulated water and oil.
6. When an air transformer is fitted to the air compressor the drain cock on the transformer must be opened at least once a day. If not, the transformer must be opened at least once a day. If these operations are not carried out, the transformer will become water-logged and moisture will enter the air hose.

Remedies for spraying problems

Even with excellent spraying equipment, problems will at some time arise. If these problems are allowed to develop they can spoil a paint finish. Usually these problems can be quickly rectified if the operator knows where to look for the source.

The following list and Figures S79 to S82 inclusive, indicate the causes of problems most commonly encountered in spraying.

1. If there is an excessive mist or spray fog it is caused by:
a. Too thin a paint.
b. Over-atomization, due to using too high an atomizing air pressure for the volume of paint flowing.
c. Improper use of the gun, such as making incorrect strokes or holding the gun too far from the surface.
2. Runs or sags on a sprayed surface are caused by:
a. Sags are the result of applying too much paint to the surface, possibly by moving the gun too slowly. Runs are caused by using too thin a paint.
b. If the gun is titled at an angle to the surface, excessive paint is applied where the pattern is closest to the surface, causing a build-up of paint and sagging.
3. An 'orange-peel' defect such as that sometimes obtained with cellulose and synthetic materials is caused by:
a. Using unsuitable thinners.
b. Either too high or too low an atomizing air pressure.

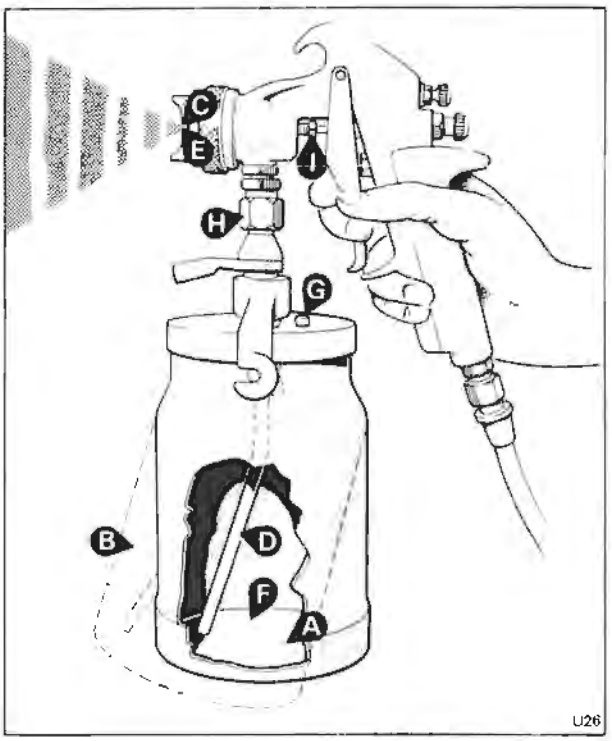

Fig. S79 Diagnosing the problems of a spray gun giving a fluttering or jerky spray
- A Insufficient paint in the cup or pressure feed tank causing the end of the fluid tube to be uncovered
- B When a suction feed gun is used, the cup is tilted at an excessive angle so that the fluid tube does not come into contact with the paint
- C An obstruction in the fluid passage-way which must be removed
- D Fluid tube loose, cracked or resting on the bottom of the paint container
- E A loose fluid tip on the spray gun
- F Too heavy a material for suction feed
- G A blocked air vent in the cup lid
- H A loose nut coupling the suction feed cup or fluid hose to the spray gun or pressure feed tank
- I A loose fluid needle packing nut or dry packing

Printed in England
© Rolls-Royce Motors Limited 1979
September 1979
TSD 4200

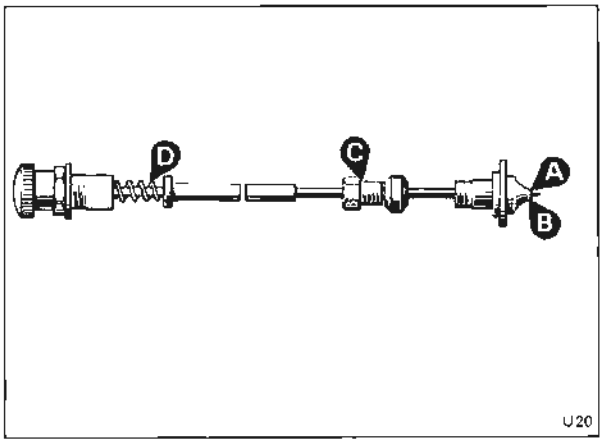

Fig. S80 Diagnosing the problem of paint leakage from the front of the spray gun

Paint leakage from the front of the spray gun is caused by the fluid needle not seating properly due to:

- A Worn or damaged fluid tip or needle
- B Lumps of dried paint or dirt lodged in the fluid tip
- C Fluid needle packing nut screwed up too tightly
- D Broken fluid needle spring

Note
Paint leakage from the fluid needle packing nut is caused by a loose packing nut or a worn or dry fluid needle packing. The packing can be lubricated with a small quantity of light oil, however, fitting new packing is strongly advised.

Finger tighten the packing nut to prevent leakage; ensure that the nut does not bind on the needle.

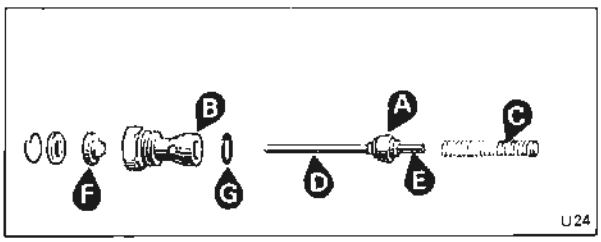

Fig. S81 Diagnosing the problem of compressed air leakage from the front of the spray gun.

Compressed air leakage from the front of the gun is caused by:

- A Dirt on the air valve or air valve seating
- B Worn or damaged air valve or air valve seating
- C Broken air valve spring
- D Stocking valve stem due to lack of lubrication
- E Bent valve stem
- F Lack of lubrication on air valve packing
- G Air valve gasket damaged

c. Holding the gun either too far away or too close to the surface.
d. The paint not thoroughly mixed or agitated.
e. Draught blowing onto the surface.
f. Improperly prepared surface.
4. If the air compressor pumps oil into the air line, it is for the following reasons.
a. Strainer on air intake blocked with dirt.
b. Blocked intake valve.
c. Too much oil in crankcase.
d. Worn piston rings.
5. An over-heated air compressor is caused by:
a. No oil in crankcase.
b. Oil too heavy.
c. Valves sticking, dirty or covered with carbon.
d. Insufficient air circulating around an air-cooled compressor due to the compressor being placed too close to a wall or in a confined space.
e. Cylinder block and head coated with a thick deposit of paint or dirt.
f. Air inlet strainer blocked.

Safety in the finishing shop

Safety is often an aspect in the refinishing trade that is sadly neglected. Fire in connection with paint and solvents develops quickly and can rapidly become out of control.

Fires in painting areas generally have three principal causes.
1. Solvents and fumes spread out over large areas and ignite.
2. Fumes in empty or nearly empty containers ignite and explode.
3. Spontaneous combustion.

Preventive measures
Solvent fumes
1. Display **'No Smoking'** and **'No Naked Flames'** signs and ensure that blow lamps and welding equipment are not used in the vicinity of the painting area.
2. Wipe up spilled thinners immediately; dispose of cloth.
3. Provide a good ventilation system to remove fumes.
4. Replace all caps and covers on containers.
5. All solvent containers and electrical equipment should be properly earthed. **Do not use temporary electrical installations.**

Static electricity
1. When pouring thinners and solvents, connect the containers with electrically conductive wire and earth them.
2. If possible earth all equipment in the paint shop.
3. Do not splash when pouring. Pour the thinner down the side of the container; free falling through the air can generate static electricity.
4. Do not use plastic containers for storage.

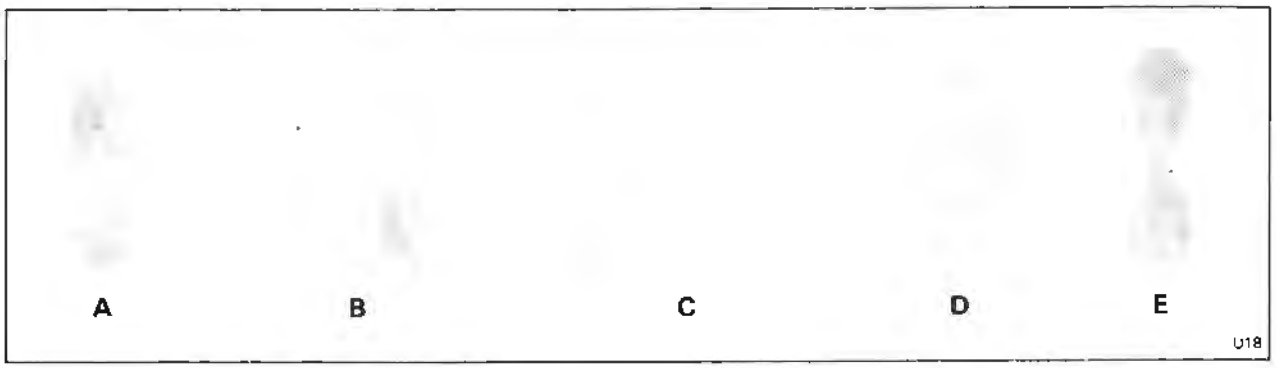

Fig. S82 Spray patterns

A Normal spray pattern

Defective spray patterns can develop from the following:

B Top or bottom heavy pattern caused by:
1. Horn holes in air cap partially blocked
2. Obstruction on top or bottom of fluid tip
3. Dirt on air cap seat or fluid tip seat

C Heavy right or left side pattern caused by:
1. **Right or left side horn hole in air cap** partially blocked
2. Dirt on right or left side of fluid tip

D Heavy centre pattern caused by:
1. Too low a setting of the spreader adjustment valve on the gun
2. Atomizing air pressure is too low or the paint is too thick
3. With pressure feed, the fluid pressure is too high or the flow of paint exceeds the normal capacity of the air cap
4. The incorrect size fluid tip for the paint being sprayed

E Split spray pattern caused by:
1. Atomizing air and fluid flow not being correctly balanced

Remedies for defective spray patterns are as follows:

B Top or bottom heavy pattern
or
C Heavy right or left side pattern

Determine if the obstruction is in the air cap by spraying a test pattern. Then rotate the air cap half a turn and spray a further test. If the defect is inverted the obstruction is in the air cap which should be cleaned as previously described.

If the defect has not changed its position the obstruction is on the fluid tip. When cleaning the fluid tip, check for fine burr on the tip which can be removed with 600 wet or dry sandpaper.

D Heavy centre pattern
or
E Split spray pattern

Check if the adjustments are unbalanced. If necessary, adjust the atomizing air pressure, fluid pressure, and spray width control setting until the correct pattern is obtained.

Spontaneous combustion

1. Some materials such as oils and certain paints, which have been wiped up with cloth and cotton waste, oxidise so rapidly that sufficient heat is generated to cause ignition.

In all, three basic rules apply to safety in the paint shop, they are.

1. **Keep the paint areas clean and tidy.**
2. **Ensure proper ventilation.**
3. **Look after all equipment, especially the electrical equipment.**

Printed in England
© Rolls-Royce Motors Limited 1979

Section S5

Bumpers
Contents

	Page
Front bumpers	S5 - 4
Bumper assembly - To remove	S5 - 4
Bumper assembly - To fit	S5 - 4
Bumper - To dismantle	S5 - 7
Bumper - To assemble	S5 - 7
Flexible closing pieces (Camargue)	S5 - 8
Fairing panel and seal	S5 - 9
Energy absorption unit mounting bracket bushes	S5 - 9
Bumper height - To check	S5 - 9
Rear bumpers	S5 - 10
Bumper assembly - To remove	S5 - 10
Bumper assembly - To fit	S5 - 10
Bumper - To dismantle	S5 - 14
Bumper - To assemble	S5 - 15
Flexible closing pieces (Camargue)	S5 - 15
Bumper side mounting brackets (Camargue)	S5 - 15
Fairing panel and seal	S5 - 16
Energy absorption unit mounting bracket bushes	S5 - 16
Bumper height - To check	S5 - 16

Printed in England
© Rolls-Royce Motors Limited 1979

Section S5

Bumpers

Introduction

The main bumper member comprises of an aluminium or stainless steel beam, to which a polished stainless steel finisher is attached.

Fixed to the outer face of the finisher is a black rubber moulding that extends around the entire outer face of the bumper.

On cars destined for countries other than the

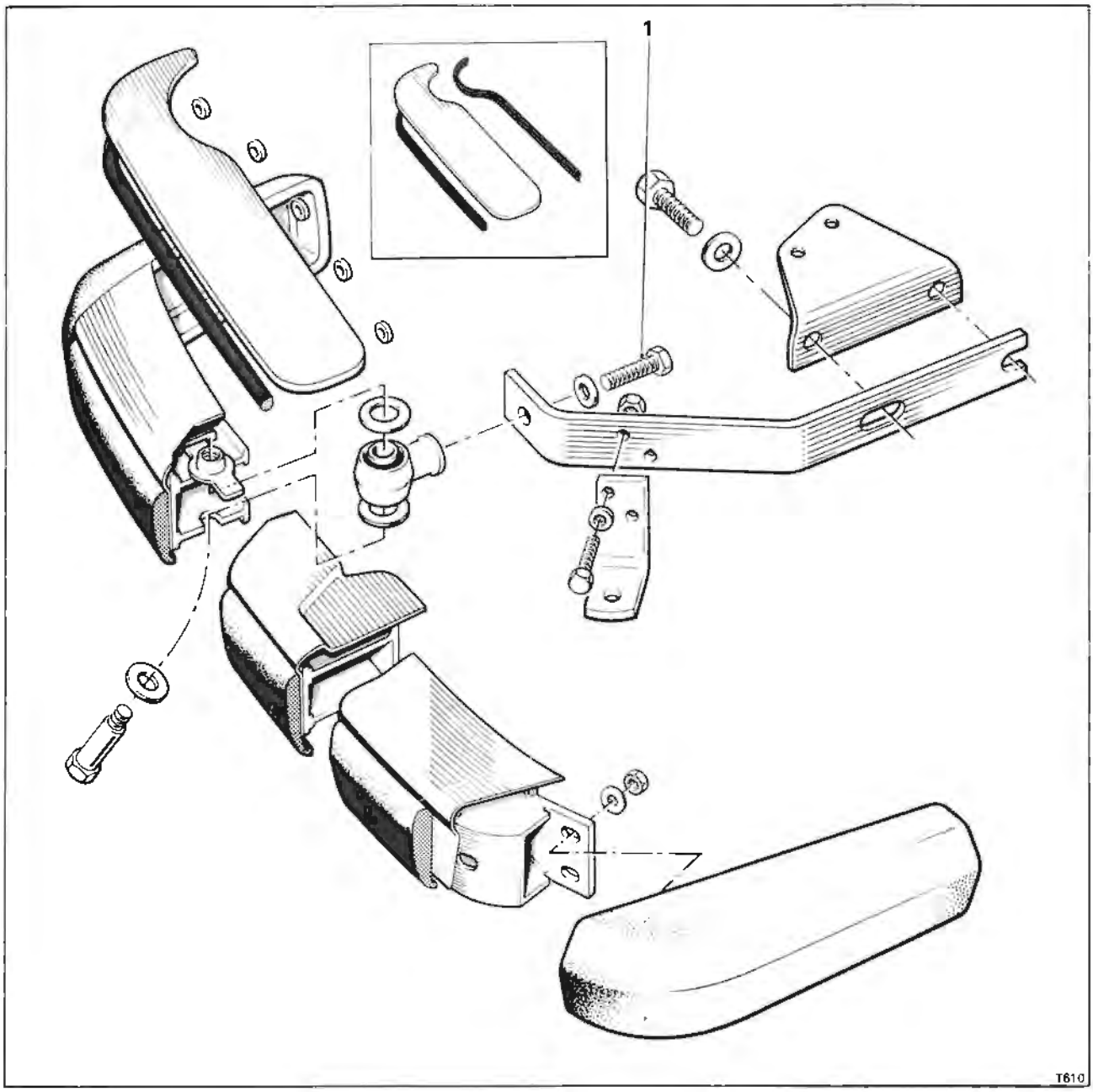

Fig. S83 **Front bumper assembly (Silver Shadow II, Bentley T2, Silver Wraith II and Corniche)**
Cars destined for countries other than U.S.A. and Canada.
Inset – Corniche cars only
1 Bumper retaining bolt – adapter to mounting bracket

Printed in England
© Rolls-Royce Motors Limited 1979

U.S.A. and Canada, the front and rear bumpers are each mounted to the car by two adapters. The outer end of each adapter houses a Metalastik bush which is secured to the bumper by a large bolt. The adapters locate into mounting brackets which are secured to the longerons at the front and rear of the car.

On cars destined for the U.S.A. and Canada, the bumpers are each mounted to the car by two energy absorption units. The outer ends of these units house a Metalastik bush which is secured to the bumper by a large bolt. The inner ends of the units locate into cast brackets which are secured to the longerons at the front and rear of the car.

Front bumpers

Front bumper assembly - To remove
Silver Shadow II, Bentley T2, Silver Wraith II and Corniche cars destined for countries other than U.S.A. and Canada

1. With the help of an assistant support the bumper.
2. Remove the bolt securing each of the adapters to the mounting brackets (see Fig. S83, item 1).
3. Carefully withdraw the bumper assembly from the body.

Note

On certain cars, air horns are fitted behind the number plate assembly. Before removing the bumper assembly on these cars, carefully remove the rubber tubing from the rear of the air horns leaving it suspended beneath the car.

If it is necessary to remove the horns, release the two nuts securing the horns to the central mounting bracket of the number plate. Carefully remove the horns and lay them on protective cloth.

4. If it is required to remove the bumper assembly mounting brackets proceed as follows.
5 Disconnect the battery.
6 Disconnect the electrical leads to both horns at their Lucar connectors.
7. Using a ¾ in. A/F spanner remove the two bolts securing each bumper mounting bracket to the body underframe. Whilst unscrewing these bolts, support the horn mounting brackets which are also retained by the same bolts.
8. Remove the horn and bumper mounting bracket assemblies together with the bolts and spacing washers.

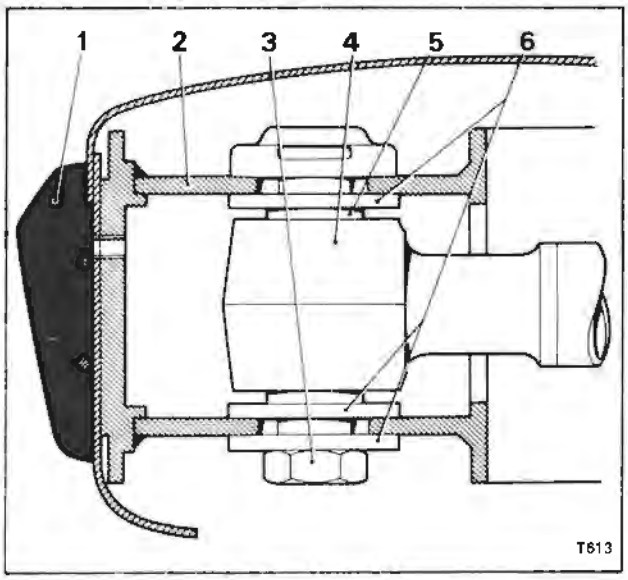

Fig. S84 **Bumper to adapter/absorber unit mounting arrangement**
1 Centre moulding
2 Bumper beam
3 Mounting bolt
4 Adapter/absorber unit
5 Metalistik bush
6 Washers

Front bumper assembly - To fit (see Fig. S83)
Silver Shadow II, Bentley T2, Silver Wraith II and Corniche cars destined for countries other than U.S.A. and Canada

To fit the front bumper assembly reverse the procedure given for removal noting the following points.

1. Care must be taken to avoid damage to the rubber mouldings or the chromium finisher when fitting the bumper assembly.
2. Fit the bumper assembly by securing the adapters to the mounting brackets. On the front end of the adapters ensure that the spacing washers are in position (see Fig. S84), then check that the two large bolts securing the front end of the adapters to the bumper are torque tightened to the figures specified in Chapter P.
3. On cars destined for West Germany a towing bracket is bolted into position on the underside of the beam.

Front bumper assembly – To remove (see Fig. S85)
Camargue cars for countries other than Canada, U.S.A. and West Germany

1. Disconnect the battery.
2. Disconnect the electrical leads to both horns at their Lucar connectors.
3. With the bumper assembly supported by an assistant, remove the two ¾ in. A/F bolts securing each mounting bracket to the body underframe. Whilst unscrewing these bolts, support the horn mounting brackets which are also retained by the same bolts. Remove the horn mounting bracket assemblies together with the bolts.
4. Carefully withdraw the bumper assembly until the mounting brackets are clear of the body. If necessary, flex the mounting brackets during removal to enable them to pass through the apertures in the front apron without damaging the paintwork.
5. Collect the spacing washers fitted between the brackets and the underframe. Retain them with their respective bracket.

Front bumper assembly – To fit (see Fig. S85)
Camargue cars destined for countries other than Canada, U.S.A. and West Germany.

To fit the front bumper assembly reverse the procedure given for removal, noting the following points.

1. Before fitting the bumper, ensure that the flexible

closing pieces are secured to each front wing.
2. Ensure that all the brackets are attached to the bumper, with the securing nuts and bolts loose to assist in positioning the bumper on the body.
3. Fit the bumper into position, ensuring that any spacing washers are located in their original positions between the mounting brackets and the underframe. Ensure that the horn mounting brackets are fitted with the horns in the uppermost position.
4. Centralize the bumper assembly then, tighten the securing nuts and bolts.

Front bumper assembly – To remove
All cars destined for U.S.A. and Canada
1. Using a ¾ in. A/F spanner, remove the nut securing each of the energy absorption units to its respective mounting bracket (see Fig. S86, item 9)
2. Collect the washers from the location spigot of the absorber units; note the position of the spacing washers on the spigot to facilitate assembly (see Fig. S86).
3. With the aid of an assistant, remove the bumper assembly. Carefully withdraw the bumper until the absorber units are clear of their mounting brackets and are through the apertures in the front apron. Care must be taken to avoid damaging the paintwork.
4. Unless absolutely necessary, do not remove the absorber unit mounting brackets from the underframe, as this will result in the bumper height having to be reset.

If it is necessary to remove the mounting brackets, proceed as follows.
5. Disconnect the battery.
6. Disconnect the electrical leads to both horns at their Lucar connectors.
7. Remove the two 7/16 in. A/F nuts and bolts securing each horn mounting bracket to the absorber unit mounting bracket situated one on each side of the car. Remove both horns complete with their respective mounting brackets.
8. Remove the two ¾ in. A/F bolts securing the absorber unit mounting brackets to the underframe; remove the mounting brackets.
9. On Camargue cars destined for Canada, a rubber snow and slush excluder is fitted around the absorbing unit in the apron apertures.

If it is necessary to release the excluder when removing the absorbing unit, release the four Phillips raised head stainless steel screws and cup washers securing the excluder to the body then, slide the excluder off the absorbing unit.

Front bumper assembly – To fit
All cars destined for U.S.A. and Canada
To fit the front bumper assembly reverse the procedure given for removal noting the following points.
1. If the absorber unit mounting brackets have been removed, check the condition of the neoprene bushes

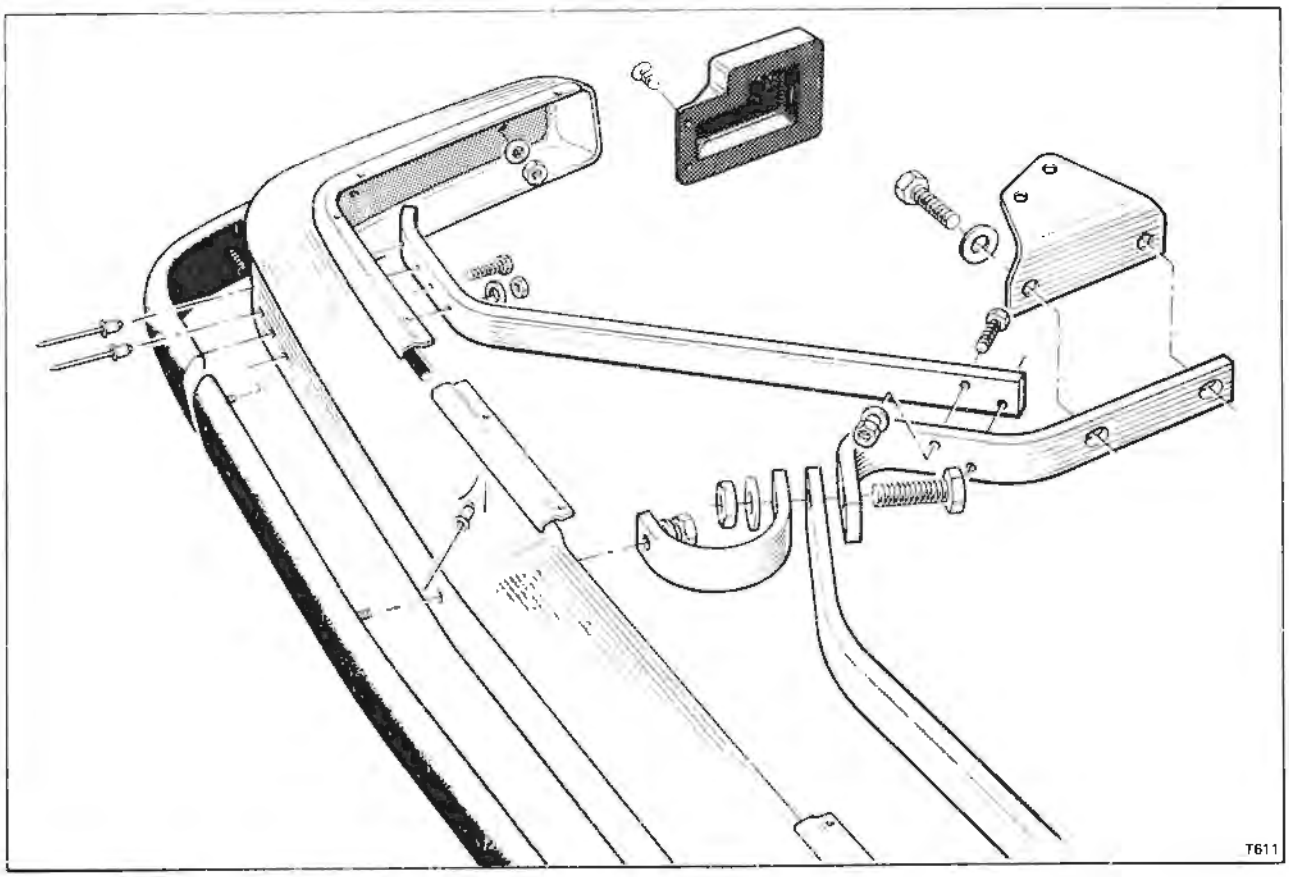

Fig. S85 Front bumper assembly (Camargue)
Cars destined for countries other than Canada, U.S.A. and West Germany

Printed in England
© Rolls-Royce Motors Limited 1979

prior to fitting the brackets to the underframe. If necessary, fit new bushes (see Absorber unit mounting bracket bushes – To renew).

2. On Camargue cars ensure that the flexible closing pieces are fitted to each front wing panel (see Flexible closing piece – To fit).

3. Check that the fairing panels, attached to the lower edge of the front apron, are aligned with the lower edge of the radiator shell. If necessary, adjust the alignment by carefully pressing the panel up or down as required until the alignment is satisfactory.

Check the rubber seal attached to the lower edge of the panels and, if necessary, fit new seals (see Front fairing panel and seals – To fit).

When carrying out any adjustment to the fairing panel alignment care must be taken to avoid damaging the paintwork.

4. Fit the energy absorption units to the bumper (see Front bumper – To assemble), leave the two large securing bolts slack; this facilitates lateral movement of the bumper assembly when positioning it on the car.

5. Fit the spherical washer onto the location spigots. The washer should be located so that the flat face of the washer abuts the end face of the unit (see Fig. S86).

6. Coat the large outer diameter of each absorber unit and the bore of the bushes in the absorber mounting brackets with a light oil or grease.

Place a few drops of Casco MLF 13 thread locking compound onto the threaded stems of the absorber units.

7. Locate the bumper assembly to the car and engage the absorber units into their respective mounting bracket

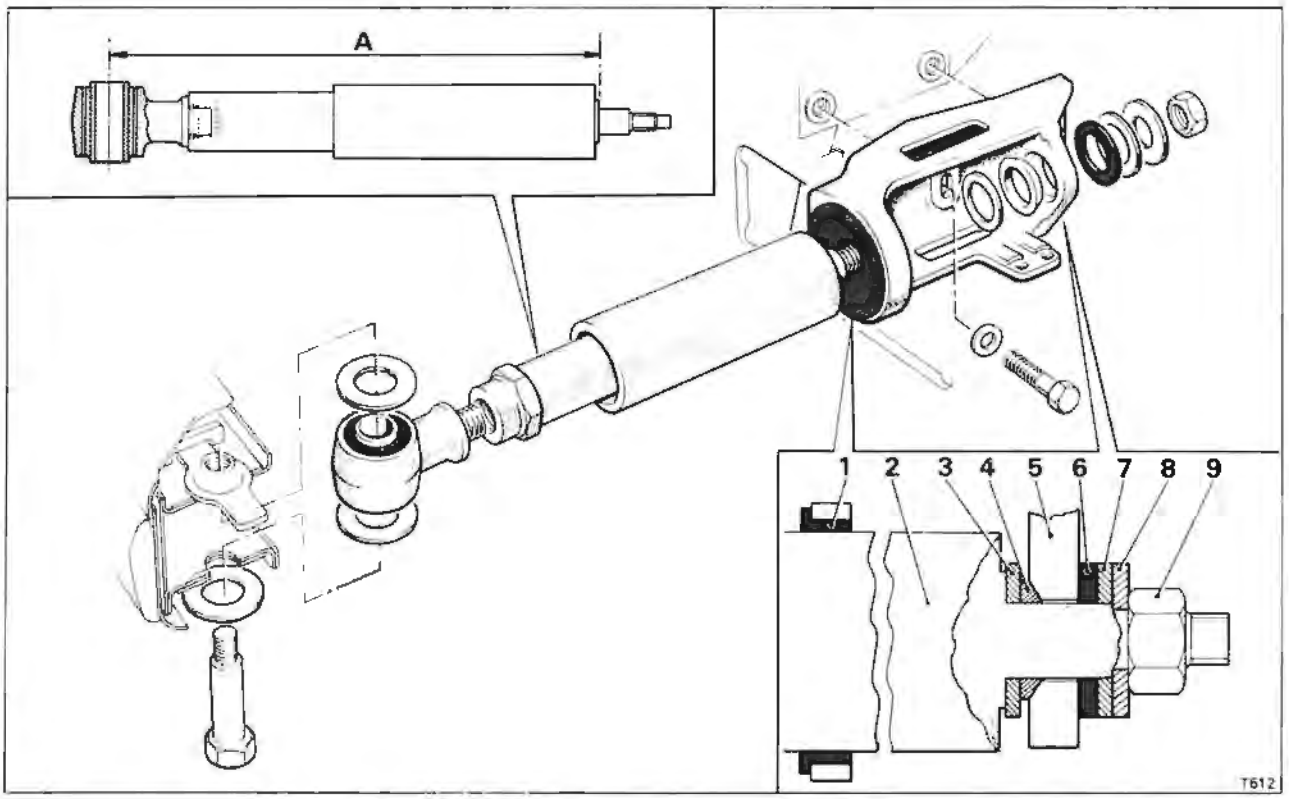

Fig. S86 Energy absorption unit

Cars destined for U.S.A. and Canada

A Length of unit measured from the abutment face of the absorber unit to the centre of the bore in the Metalistik bush.

	Length of absorber unit High limit – Low limit
Silver Shadow II, Bentley T2, Silver Wraith II and Corniche (front and rear)	32,76 cm. – 32,63 cm. (12.90 in. – 12.850 in.)
Camargue (front)	31,81 cm. – 31,68 cm. (12.525 in. – 12.475 in.)
Camargue (rear)	29,34 cm. – 29,21 cm. (11.556 in. 11.506 in.)

1 Mounting bracket bush
2 Energy absorption unit
3 Spacing washer
4 Spherical washer
5 Mounting bracket
6 Neoprene washer
7 Spacing washer
8 Plain washer
9 Nut

bushes Apply pressure to the bumper, simultaneously behind each absorber unit, guiding the location spigot onto each absorber unit through the holes in the mounting brackets. When the spherical washer on each absorber unit fits up against its respective mounting bracket abutment face, the units are correctly located (see Fig. S86).
8. Fit the various washers and securing nut to each absorber unit spigot stem (see Fig. S86). Torque tighten both securing nuts to the figure specified in Chapter P.
9. Centralize the bumper to give an equal clearance between the wing panel and the bumper on each side of the car. Torque tighten the absorber unit to bumper mounting bolts to the figure specified in Chapter P.
10. Check that the bumper is parallel with the forward edges of the fairing panels and radiator shell. If necessary, forward and rearward alignment of the bumper can be adjusted by altering the position of the spacing washers on the absorber unit spigot stem The two spacing washers can be fitted as shown in Figure S86. Alternatively, both spacing washers can be fitted to either the front or rear side of the mounting bracket.

Note

If the spacing washers are fitted to the absorber unit abutment face side of the mounting bracket, ensure that they are positioned between the abutment face of the absorber unit and the flat face of the spherical washer as shown in Figure S86.

11. Check that sufficient clearance exists between the bottom face of the radiator shell and the top face of the bumper. If there is insufficient clearance, adjust the position of the mounting brackets as follows.
12. Remove the bumper from the car.
13. Slacken the mounting bracket securing bolts. Lift the rear end of the brackets and tilt the front end downwards. Tighten the securing bolts with the brackets in this new position.
14. Refit the bumper assembly.

Note

If the mounting bracket positions on the underframe are disturbed, it will be necessary to check the bumper height (see Bumper height – To check).

Front bumper assembly – To remove and fit
Camargue cars destined for West Germany

To remove and fit the front bumper assembly, follow the procedure given for Silver Shadow II cars destined for countries other than U.S.A. and Canada noting the following point.

1. A stainless steel beam is fitted. Welded into position on the underside of the beam is a towing bracket.

Front bumper – To dismantle
Silver Shadow II, Bentley T2, Silver Wraith II and Corniche

1. Remove the bumper assembly.
2. Remove the nuts and washers securing the side mouldings to the bumper, then remove both mouldings. Note the number of packing pieces to facilitate assembly.
3. Remove the 7/16 in. A/F nuts and washers securing the centre moulding to the bumper; remove the moulding.

On cars destined for U.S.A. and Canada, remove the two small mouldings fitted to each side of the number plate by releasing the three 7/16 in. A/F nuts and washers securing each one to the beam.

4. Remove the number plate assembly by releasing the six screws securing the assembly to the underside of the beam.

On cars destined for U.S.A. and Canada, remove the number plate assembly by releasing the two screws from the rear of the bumper beam mounting bracket and the screw securing the backing plate to the front of the beam.

5. On cars fitted with a badge bar, remove the bar by releasing the two bolts and washers heneath the finisher.
6. Using a 4,76 mm. (0.187 in.) diameter drill, remove the two pop rivets securing the stainless steel finisher to the beam; remove the finisher
7. Remove the adapters from the bumper assembly by releasing the large bolt securing each adapter to the bumper (see Fig. S84).

Front bumper – To assemble
Silver Shadow II, Bentley T2, Silver Wraith II and Corniche

To assemble the front bumper reverse the procedure given for removal noting the following points.

1. Protect the polished surface of the finisher with masking tape or white linen cloth tape.
2. When fitting the adapters, ensure that the washers are in their correct position, before torque tightening the large securing bolts to the figure specified in Chapter P (see Fig. S84).
3. When fitting a new finisher and beam, temporarily locate the finisher into position on the beam with two ¼ in. UNF nuts and bolts.
4. Fit the side mouldings, complete with studs in each threaded insert, to the beam. Adjust the mouldings forward until the radiused end of the platform on the mouldings locates inside the radius of the finisher; secure the mouldings in this position with ¼ in. UNF nuts.
5. Lower the finisher on its mounting slots until the top face of the finisher is flush with the side mouldings; tighten the temporary securing bolts.
6. Using a 4,76 mm. (0.187 in.) diameter drill, bore two holes in the front face of the finisher and through the beam, at the distance specified in Figure S87.
7. Dip the ends of the pop rivets in Keenol KG20 or Whitmore Compound grease or their equivalent before inserting them into the two drilled holes. Fix and close the pop rivets, securing the finisher in position.

Remove the temporary securing bolts.

Front bumper – To dismantle
Camargue cars destined for countries other than Canada, U.S.A. and West Germany

1. Remove the bumper assembly.
2. Remove the 7/16 in. A/F nuts and bolts securing the side mouldings to the bumper then remove both mouldings; each moulding is secured by one bolt and washer and two nuts and washers.
3. Remove the 7/16 in. A/F nuts and washers securing the centre moulding and bumper stays; remove the moulding.
4. Using a 6,35 mm. (0.250 in.) diameter drill, remove the four pop rivets securing the stainless steel finisher to the bumper stays; remove the finisher.

Printed in England
© Rolls-Royce Motors Limited 1979

5. If it is necessary to dismantle the bumper stays from the mounting brackets refer to Figure S85.

Front bumper — To assemble
Camargue cars destined for countries other than Canada, U.S.A. and West Germany
To assemble the front bumper reverse the procedure given for removal noting the following points.
1. When fitting a new finisher, locate the finisher to the bumper stays, temporarily securing it in position with two ¼ in. UNF bolts and nuts.
2. Loosely fit the assembly to the car, ensuring that there is an equal clearance between the wing panel and the bumper on each side of the car; tighten all nuts and bolts.
3. Remove the assembly from the car at the mounting brackets on the underframe.
4. Remove the side mouldings (see Front bumper — To dismantle, Operation 2).
5. Using the bumper stays as a guide, drill two 6,35 mm. (0.250 in.) holes through the finisher at each outer stay (see Fig. S85).
6. Dip the ends of the pop rivets in Keenol KG20 or Whitmore Compound grease or their equivalent before inserting them into the four drilled holes. Fix and close the pop rivets, securing the finisher in position.
7. Remove the temporary securing bolts and fit the centre and side mouldings.

Front bumper — To dismantle
Camargue cars destined for Canada, U.S.A. and West Germany
1. Remove the bumper assembly.
2. Remove the 7/16 in. A/F nuts and bolts securing the side mouldings to the bumper then remove both mouldings. Each moulding is secured by a bolt and washer, also two nuts and washers.

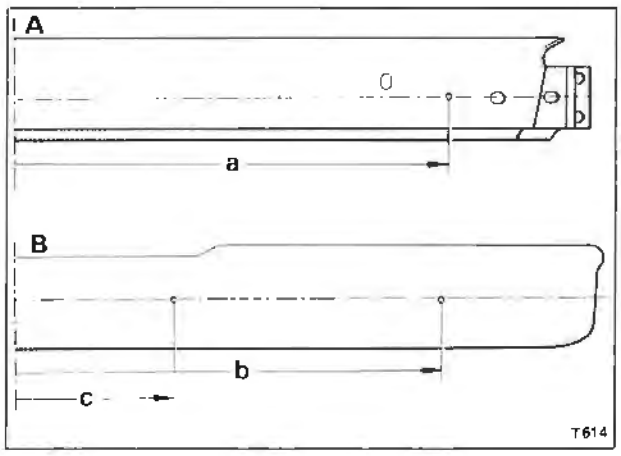

Fig. S87 Positioning and retaining the finisher
- **A** Silver Shadow II, Bentley T2, Silver Wraith II and Corniche
- **a** 68,73 cm. (27.062 in.)
- **B** Camargue
- **b** 68,73 cm. (27.062 in.)
- **c** 28,89 cm. (11.375 in.)

3. On cars destined for U.S.A. and Canada, remove the two small mouldings fitted to each side of the number plate, by releasing the three 7/16 in. A/F nuts and washers securing each one to the beam.

On cars destined for West Germany, remove the 7/16 in. A/F nuts and washers securing the centre moulding to the beam; remove the moulding.
4. On cars destined for U.S.A. and Canada, remove the number plate assembly. Release the two screws from the mounting bracket fastened to the rear flange of the beam and the screw securing the backing plate to the front of the beam.
5. Using a 4,76 mm. (0.187 in.) diameter drill, remove the four pop rivets securing the stainless steel finisher to the beam; remove the finisher.

Front bumper — To assemble
Camargue cars destined for Canada, U.S.A. and West Germany
To assemble the front bumper reverse the procedure given for removal noting the following points.
1. Protect the polished surface of the finisher with masking tape or white linen cloth tape.
2. When fitting a new finisher and beam, temporarily locate the finisher into position on the beam with two ¼ in. UNF nuts and bolts.
3. Loosely fit the assembly to the car. Ensure that there is an equal clearance between the wing panel and the bumper on each side of the car, also check that the finisher is aligned with the fairings before fully tightening the temporary securing bolts.
4. Using a 4,76 mm. (0.187 in.) diameter drill, bore four holes in the front face of the finisher and through the beam, at the distances specified in Figure S87.
5. Dip the ends of the pop rivets in Keenol KG20 or Whitmore Compound grease or their equivalent before inserting them into the four drilled holes. Fix and close the pop rivets, securing the finisher in position.
6. Remove the temporary securing bolts.
7. Fit and align the rubber mouldings.

Flexible closing pieces — To remove (see Fig. S85)
Camargue
1. Remove the front bumper assembly.
2. Using a screwdriver, carefully lever out the two plastic drive fasteners securing the closing piece to the wing panel.
3. Detach the rear edge of the closing piece from the retainer bracket; remove the closing piece.

Flexible closing pieces — To fit (see Fig. S85)
Camargue
To fit a flexible closing piece reverse the procedure given for removal noting the following points.
1. Prior to fitting the plastic drive fasteners, ensure that the rear edge of the closing piece is firmly held between the retainer bracket and the wing panel.
2. Always fit new drive fasteners as the retaining flanges of the fasteners will have been damaged during removal.
3. Check to ensure that the closing piece is held firmly in position by the drive fasteners.

Front fairing panel and seal — To remove (see Fig. S83) Silver Shadow II, Bentley T2 and Silver Wraith II

1. Remove the bumper assembly.
2. Remove the self-tapping screws securing the fairing to the front wing apron; remove the fairing together with the nylon spacing washers.
3. Carefully remove the seal from the front of the fairing panel.

Corniche (see Fig. S83, inset)

1. Remove the bumper assembly.
2. Remove the five bolts and washers securing the fairing to the front wing apron; remove the fairing together with the rubber sealing strip.
3. Carefully remove the seal and the rubber sealing strip from the front and rear of the fairing panel respectively.

Camargue (see Fig. S85)

1. Remove the bumper assembly.
2. Using a 3,97 mm. (0.156 in.) diameter drill, remove the pop rivets securing the fairing to the front wing apron.
3. Carefully remove the seal from the front of the fairing panel.

Front fairing panel and seal — To fit

To fit the front fairing panel and seal(s) reverse the procedure given for removal noting the following points.

Silver Shadow II, Bentley T2 and Silver Wraith II (see Fig. S83)

1. When fitting a new seal, clean the bonding surfaces of the panel and seal with Bostik Cleaner 6001; allow approximately one hour to dry.
2. Apply Dunlop Adhesive S1240 to the bonding surfaces of the panel and seal; allow between ten and thirty minutes at approximately 21°C. (70°F.) for the adhesive to partly dry then, locate the seal to the panel and press firmly into position.

The seal should be positioned with the flat side of the seal towards the underside of the car.

3. Ensure that nylon inserts are fitted into the holes in the front wing apron before fitting the fairing.

Corniche (see Fig. S83, inset)

1. When fitting a new seal to the front of the fairing or a rubber sealing strip to the rear of the fairing, clean the bonding surfaces of the panel and seal(s) with Bostik Cleaner 6001; allow approximately one hour to dry.
2. Apply Dunlop Adhesive S1240 to the bonding surfaces of the panel and to the front seal or rear sealing strip; allow between ten and thirty minutes at approximately 21°C. (70°F.) for the adhesive to partly dry, then locate the seal or sealing strip to the panel and press firmly into position.

The front seal should be positioned with the flat side of the seal towards the underside of the car.

Position the sealing strip along the rear edge of the fairing, aligning the holes in the strip with those in the fairing panel before pressing into position.

Camargue (see Fig. S85)

1. Repeat Operations 1 and 2 from Front fairing panel and seal - To fit, Silver Shadow II Bentley T2 and Silver Wraith II.
2. Carefully align the fairings before fixing and closing the pop rivets securing the fairing in position.

Energy absorption unit mounting bracket bushes — To renew (see Fig. S86, item 1). Cars destined for U.S.A. and Canada

1. Remove the bumper assembly, carefully withdrawing the absorber units clear of their mounting brackets and through the apertures in the front apron.
2. Remove the mounting bracket from the underframe.
3. Press out the old bush.
4. Clean the bonding surfaces of the new bush and the bore of the mounting bracket with Bostik Cleaner 6001, allow approximately one hour to dry.
5. Apply Boscolite Primer 9252 to the bore in the bracket; allow approximately one hour to dry.
6. Apply Boscoprene Adhesive 2402 (parts 1 and 2) to the bonding surfaces of the new bush and the bore in the mounting bracket; allow ten to fifteen minutes for the adhesive to partly dry.
7. Press the bush into the mounting bracket until the collar of the bush abuts the front face of the bracket.
8. A satisfactory bond will be achieved in two to three days.

Bumper height — To check

Cars destined for U.S.A. and Canada

1. Ensure that the tyres are to the correct pressures; refer to Chapter R.
2. Adopt either of the following procedures

a. Fill the fuel tank

or

b. Engage the 'Park' position and switch on the ignition. If the 'Low Fuel' warning panel illuminates, add 77 kg. (170 lb.) of ballast to the luggage compartment.

If the warning panel fails to illuminate, when the car is gently rocked, drain the fuel from the tank until the warning panel does illuminate then add the specified ballast to the luggage compartment.

Switch off the ignition.

3. Stand the car on a level surface, measure the bumper height from the level surface to the position shown in Figure S88.

The minimum dimension for both front and rear bumpers is 46,35 cm. (18.250 in.).

It is extremely unlikely that the corresponding maximum bumper height will be reached, but for reference the figure is 52,07 cm. (20.50 in.).

4. If the cars fail to meet the minimum height of 46,35 cm. (18.250 in.), carry out the following procedures taking the necessary corrective action.
5. To eliminate suspension stiffness as a possible cause for low bumper height, drive the car forwards and then in reverse two or three times; then measure the bumper height.
6. If after progressing through Operation 5 the height is still too low, check the standing height of the car and adjust if necessary (see Chapter H). Check the bumper

Printed in England
© Rolls-Royce Motors Limited 1979
May, 1979
TSD 4200

height if any adjustment is made to the car standing height.

7. If the car standing height is satisfactory, it will be necessary to remove the relevant bumper(s) and re-position the absorber unit mounting brackets as follows.

Slacken the bolts securing the absorber unit mounting brackets to the underframe. Lift the outer ends of the brackets and push down the inner ends to their full extremeties (i.e. tilt the outer ends of the brackets upwards).

Tighten the securing bolts with the brackets in this new position.

8. Refit the bumper(s) and check the bumper height.

Rear bumpers

Rear bumper assembly — To remove
Silver Shadow II, Bentley T2, Silver Wraith II and Corniche cars (prior to car serial number 50 001) destined for countries other than U.S.A. and Canada

1. Disconnect the battery.

2. Carefully withdraw the number plate lamps from under their protecting shroud. Remove the chrome finishers and also the lenses. Thread the two lamps back through the fairing, refit the finishers and lenses leaving them suspended beneath the bumper.

3. With the help of an assistant support the bumper.

4. Remove the bolt securing each of the adapters to the mounting brackets (see Fig. S89, item 1).

5. Carefully withdraw the bumper assembly from the body.

When removing the bumper, take care to avoid damaging the paintwork and the automatic air conditioning system temperature sensor situated on the right-hand rear wing panel.

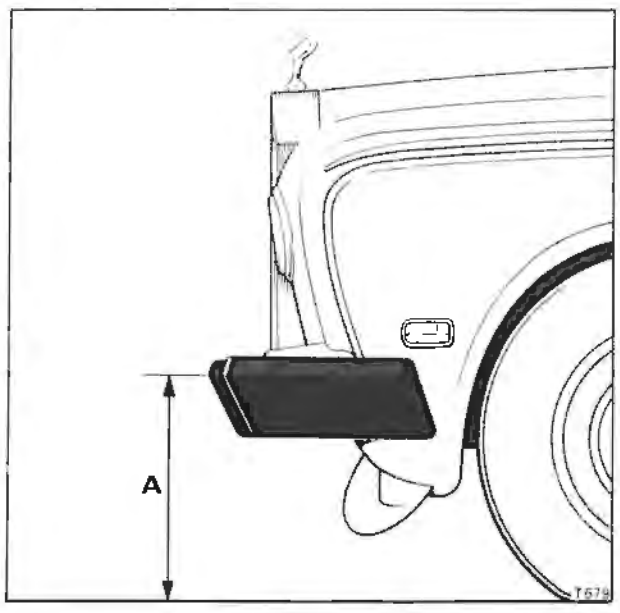

Fig. S88 **Checking the bumper height**
Cars destined for U.S.A. and Canada
A 46,35 cm. to 52,07 cm.
(18.250 in. to 20.50 in.) front and rear

Note
On cars destined for Japan, ensure that the side moulding retention brackets are fully disengaged before completely withdrawing the bumper assembly from the body (see Fig. S89, inset A).

6. If it is required to remove the bumper assembly mounting brackets proceed as follows.

Using a ¾ in. A/F spanner, remove the two bolts securing each bumper mounting bracket to the body underframe; remove the mounting brackets and the aperture seal (see Fig. S89).

Rear bumper assembly — To fit
Silver Shadow II, Bentley T2, Silver Wraith II and Corniche cars (prior to car serial number 50 001) destined for countries other than U.S.A. and Canada.

To fit the rear bumper assembly reverse the procedure given for removal noting the following points.

1. When fitting the bumper, care must be taken to avoid damaging the automatic air conditioning system temperature sensor situated on the right-hand rear wing panel.

2. Fit the bumper assembly by securing the adapters to the mounting brackets. On the rear end of the adapters ensure that the spacing washers are in position (see Fig. S84), then check that the two large bolts securing the rear end of the adapters to the bumper are torque tightened to the figures specified in Chapter P.

3. On cars destined for Japan, ensure that the side mounting retention brackets are engaged with their respective brackets fastened to the body (see Fig. S89, inset A).

Rear bumper assembly — To remove (see Fig. S90, Part A)
Corniche cars from car serial number 50 001 destined for countries other than U.S.A. and Canada

1. Disconnect the battery.

2. Carefully withdraw the number plate lamps from under their protecting shroud. Remove the chrome finishers and also the lenses. Thread the two lamps back through the fairing. Refit the finishers and lenses leaving them suspended beneath the bumper.

3. With the help of an assistant support the bumper.

4. Remove the bolt securing each of the adapters to the mounting brackets (see Fig. S90, item 1).

5. Carefully withdraw the bumper assembly from the body. When removing the bumper, take care to avoid damaging the paintwork, also, the automatic air conditioning system temperature sensor situated on the right-hand rear wing panel.

Note
On cars destined for Japan, ensure that the side moulding retention brackets are fully disengaged before completely withdrawing the bumper assembly from the body (see Fig. S89, inset A).

6. If it is required to remove the bumper assembly mounting brackets proceed as follows.

7. Remove the spare wheel (see Section S6).

8. Remove the right-hand side rear section of the exhaust pipe (see Chapter Q).

9. Using a ¾ in. A/F spanner, release the bolts, nuts and washers securing the mounting brackets to the underframe. Remove the brackets and the aperture seals.

Access to the bolts securing the right-hand side mounting bracket is from inside the luggage compartment well.

Rear bumper assembly – To fit (see Fig. S90, part A) Corniche cars from car serial number 50 001 destined for countries other than U.S.A. and Canada)

To fit the rear bumper assembly reverse the procedure given for removal noting the following points.

1. Clean the bonding surfaces of the aperture and seal with Bostik Cleaner 6001; allow approximately one hour to dry.
2. Apply Black Silastic 732 RTU adhesive or its equivalent to the bonding surfaces of the aperture and seal.
3. Allow between ten and twenty minutes for the adhesive to become 'tacky' then bring the two surfaces together using hand pressure.
4. When fitting the bumper,care must be taken to avoid damaging the paintwork, also, the automatic air conditioning system temperature sensor situated on the right-hand rear wing panel.

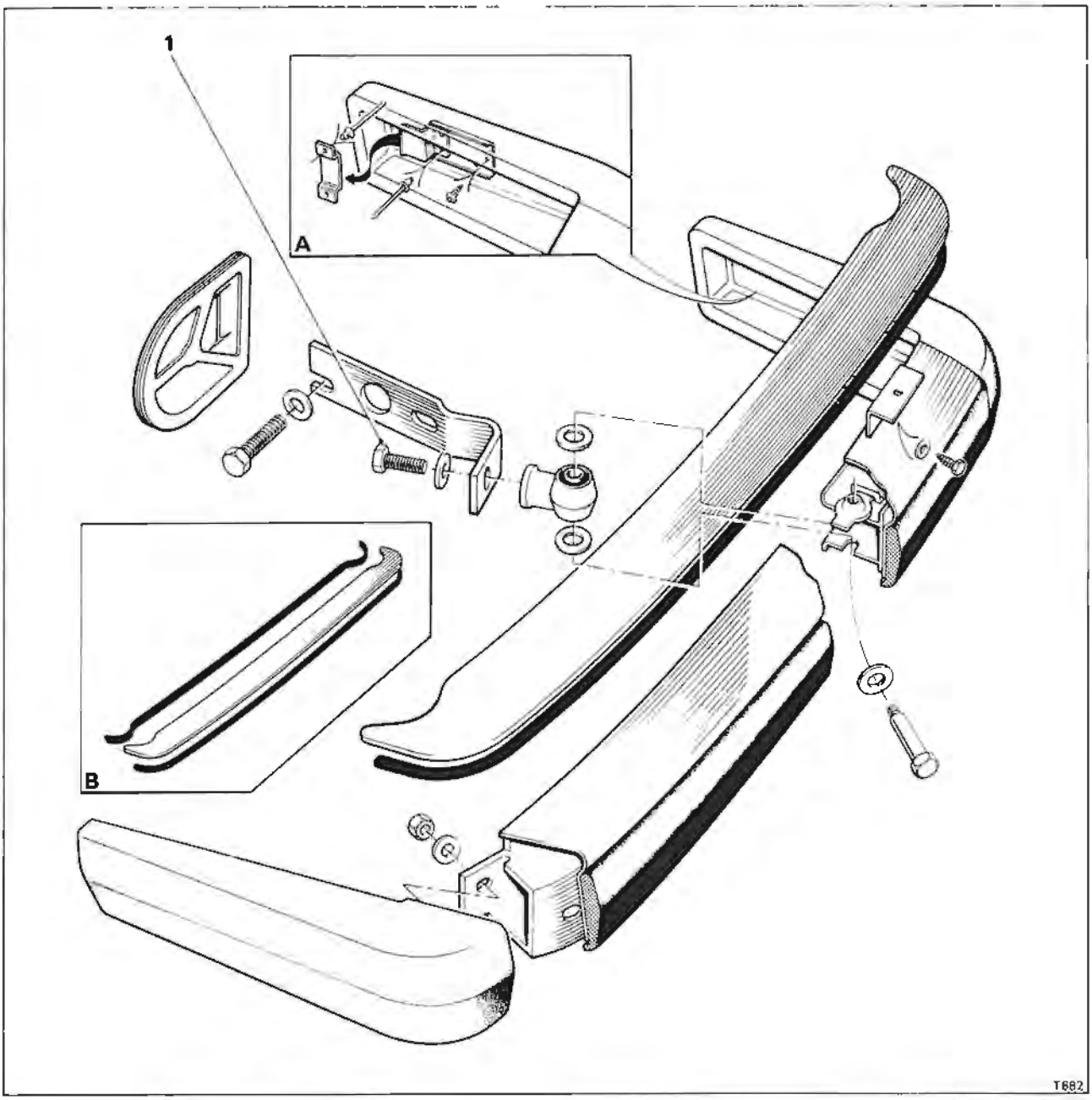

Fig. S89 Rear bumper assembly [Silver Shadow II, Bentley T2 Silver Wraith II and Corniche (Prior to car serial number 50 001) cars]

Cars destined for countries other than U.S.A. and Canada.

A Cars destined for Japan **B** Corniche cars only

1 Bumper retaining bolt – adapter to mounting bracket.

Printed in England

© Rolls-Royce Motors Limited 1979

5. Fit the bumper assembly by securing the adapters to the mounting brackets. On the rear end of the adapters ensure that the spacing washers are in position (see Fig. S84), then check that the two large bolts securing the rear end of the adapters to the bumper are torque tightened to the figures specified in Chapter P.
6. On cars destined for Japan, ensure that the side moulding retention brackets are engaged with their respective brackets fastened to the body (see Fig. S89, inset A).

Rear bumper assembly — To remove (see Fig. S91)
Camargue cars destined for countries other than U.S.A. and Canada
1. To gain access to the bolts securing the bumper to the side mounting brackets proceed as follows.

Slacken the three 7/16 in. A/F nuts securing both side mouldings to the bumper, then remove the two front nuts and washers from each moulding. These nuts are located along the inside faces of the bumper side mouldings and access to them is from beneath the car.
2. Move the front end of each moulding outwards sufficiently to gain access to the two 7/16 in. A/F bolts securing each side member to the mounting brackets then, remove the bolts. Collect the threaded plate from behind each mounting bracket (see Fig. S91, inset).
3. With the help of an assistant, support the bumper.
4. Remove the two ¾ in. A/F nuts securing the adapters to the rear mounting brackets (see Fig. S91, inset A).
5. Carefully withdraw the bumper assembly from the body until the threaded adapters are free of the mounting brackets. Retain the spacing washers, noting their number and position to facilitate assembly.

When removing the bumper, care must be taken to avoid damaging the paintwork and the automatic air conditioning system temperature sensor situated on the right-hand rear wing panel.
6. If it is required to remove the bumper assembly mounting brackets proceed as follows.

Release the two bolts securing each mounting bracket to the body underframe; remove the mounting brackets and the aperture seals (see Fig. S91, inset A).

Rear bumper assembly — To fit (see Fig. S91)
Camargue cars destined for countries other than U.S.A. and Canada
To fit the rear bumper assembly reverse the procedure given for removal noting the following points.
1. Ensure that the flexible closing pieces are secured to each rear wing.
2. Ensure that the side mounting brackets are in position on each side of the car (see Rear bumper side mounting brackets — To fit).
3. Slacken the two 1 in. A/F bolts securing the adapters to the bumper. This facilitates lateral movement of the bumper when positioning it on the car.
4. Locate the bumper assembly to the car and secure the adapters to the rear mounting brackets with the ¾ in. A/F nuts and washers. Ensure that any spacing washers are fitted in their original positions.

When positioning the bumper to the car, take care to avoid damaging the paintwork and the air conditioning temperature sensor situated on the right-hand rear wing.
5. Secure the side of each bumper to the side mounting brackets with the two 7/16 in. A/F bolts. Centralize the bumper to give an equal gap between the rear wing panels and the bumper. Tighten the side mounting bolts, including the bolts through the swivel brackets.
6. Torque tighten the two large bolts securing the adapters to the bumper to the figure specified in Chapter P.

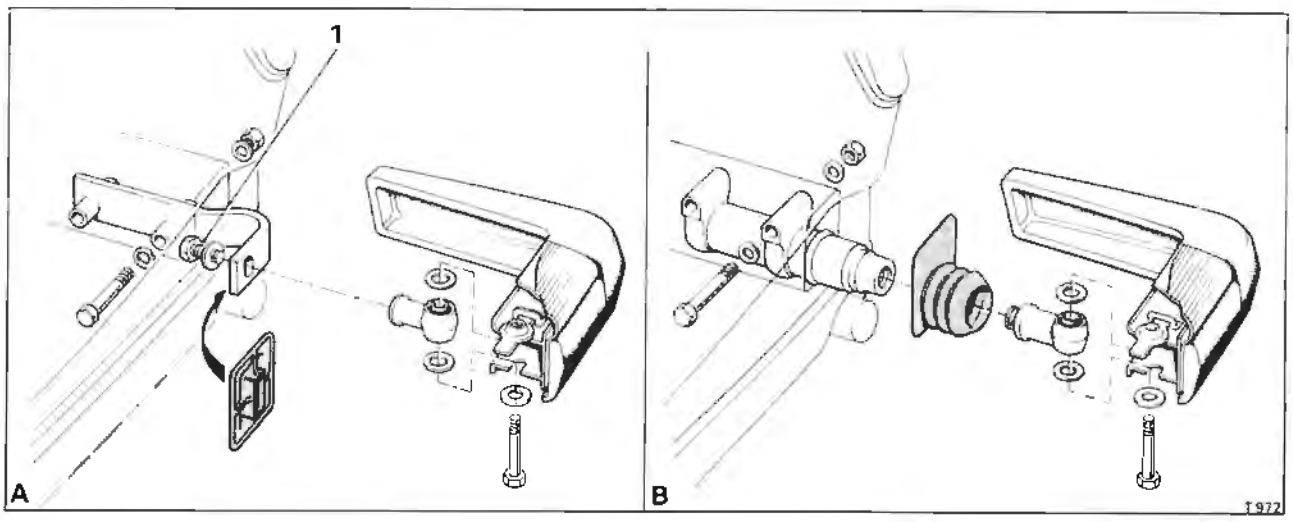

Fig. S90 Rear bumper assembly (Corniche cars from car serial number 50 001)
A Cars destined for countries other than U.S.A. and Canada.
1 Bumper retaining bolt - - adapter to mounting bracket
B Cars destined for U.S.A. and Canada

Rear bumper assembly — To remove

All cars destined for U.S.A. and Canada (except Corniche cars from car serial number 50 001)

1. On Camargue cars, disconnect the bumper side members from the side mounting brackets (see Rear bumper — To remove, Camargue cars for countries other than U.S.A. and Canada, Operations 1 and 2).
2. Remove the nut securing each energy absorption unit to its respective mounting bracket (see Fig. S86, item 9).
3. Collect the washers from the location spigot of the absorber units; note the position of the washers on the spigot to facilitate assembly (see Fig. S86).
4. With the aid of an assistant, remove the bumper

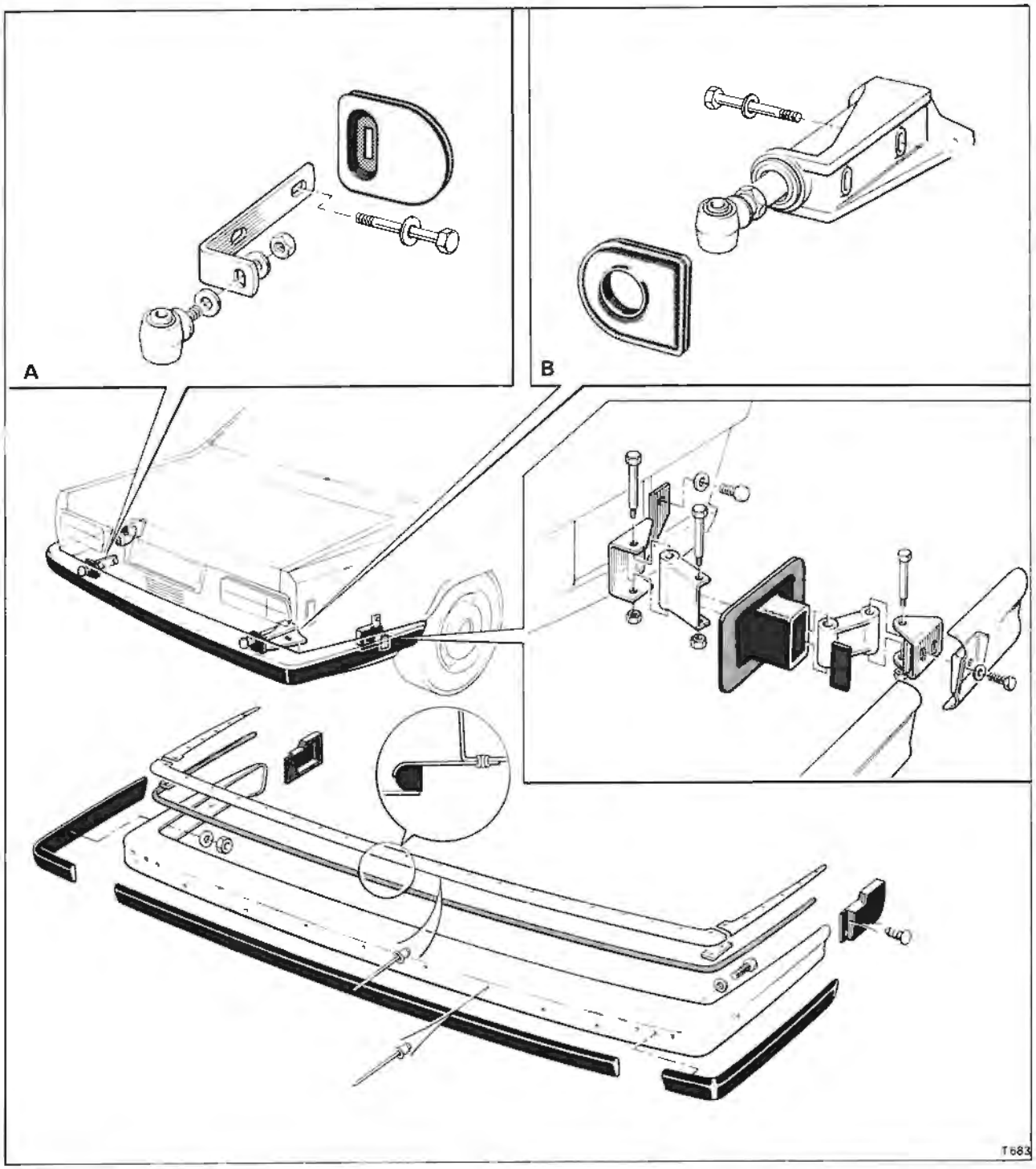

Fig. S91 Rear bumper assembly (Camargue)

A Cars destined for countries other than U.S.A. and Canada
B Cars destined for U.S.A. and Canada

Printed in England
© Rolls-Royce Motors Limited 1979

assembly. Carefully withdraw the bumper until the absorber units are clear of their mounting brackets and are through the apertures in the rear body panel.

When removing the bumper, care must be taken to avoid damaging the paintwork and the automatic air conditioning system temperature sensor situated on the right-hand rear wing panel.

5. Unless absolutely necessary, do not remove the absorber unit mounting brackets from the underframe, as this will result in the bumper height having to be reset.
6. If it is necessary to remove the mounting brackets, release the two ¾ in A/F bolts securing each bracket to the underframe and remove the brackets.

Rear bumper assembly — To fit
All cars destined for U.S.A. and Canada (except Corniche cars from car serial number 50 001)

To fit the front bumper assembly reverse the procedure given for removal noting the following points.

1. If the absorber unit mounting brackets have been removed, check the condition of the neoprene bushes prior to fitting the brackets to the underframe. If necessary, fit new bushes (see Energy absorption unit mounting bracket bushes — To renew).
2. Ensure that the aperture seals are in position over the mounting brackets.
3. Check that the fairing panel(s) are aligned satisfactorily with the lower body panel; adjust if necessary by carefully pressing the panel up or down as required.

Check the rubber seal(s) attached to the lower edge of the panel and, if necessary, fit new seals (see Rear fairing panel and seals — To fit).

When carrying out any adjustment to the fairing panel alignment, care must be taken to avoid damaging the paintwork.

4. On Camargue cars, ensure that the flexible closing pieces are fitted to each rear wing panel (see Flexible closing piece — To fit).

Also, ensure that the side mounting brackets are in position (see Rear bumper side mounting bracket — To fit).

5. Fit the energy absorption units to the bumper. Fit the bumper to the body following the same procedure given for fitting the front bumper (see Front bumper — To fit, all cars destined for U.S.A. and Canada, Operations 4 to 9 inclusive).
6. On Camargue cars, secure the bumper to the two side mounting brackets. Prior to tightening the link bracket pivot bolts, check the following and rectify as necessary.
7. On all cars, check that the bumper is parallel with the rear edges of the fairing panels. If necessary, the forward and rearward alignment of the bumper can be adjusted by altering the position of the spacing washers on the absorber unit spigot stem. The two spacing washers can be fitted as shown in Figure S86. Alternatively, both spacing washers can be fitted to either the front or rear side of the mounting bracket.

Note
If the spacing washers are fitted to the absorber unit abutment face side of the mounting bracket, ensure that they are positioned between the abutment face of the absorber unit and the flat face of the spherical washer shown in Figure S86.

8. On Camargue cars, when the rear bumper alignment is satisfactory, tighten the self-locking nuts on the side mounting bracket pivot bolts, then secure the mouldings to the bumper with the 7/16 in. A/F nuts and washers.

Rear bumper assembly — To remove (see Fig. S90, part B)
Corniche cars from car serial number 50 001 destined for U.S.A. and Canada

1. Remove the spare wheel (see Section S6).
2. Remove the right-hand side rear section of the exhaust pipe (see Chapter Q).
3. With the help of an assistant support the bumper.
4. Using a ¾ in. A/F spanner, release the bolts, nuts and washers securing the energy absorption units and mounting brackets to the underframe.
5. Carefully withdraw the bumper assembly until the absorber units, mounting brackets and aperture seals are clear of the apertures in the rear body panel.

When removing the bumper, care must be taken to avoid damaging the paintwork also, the automatic air conditioning system temperature sensor situated on the right-hand rear wing panel.

Rear bumper assembly — To fit (see Fig. S90, part B)
Corniche cars from car serial number 50 001 destined for U.S.A. and Canada

To fit the rear bumper assembly reverse the procedure given for removal noting the following points.

1. Clean the bonding surfaces of the aperture and seal with Bostik Cleaner 6001; allow approximately one hour to dry.
2. Apply Black Silastic 732 RTU adhesive or its equivalent to the bonding surfaces of the aperture and seal.
3. Allow between ten and twenty minutes for the adhesive to become 'tacky' then bring the two surfaces together using hand pressure.
4. When fitting the bumper, care must be taken to avoid damaging the paintwork, also, the automatic air conditioning system temperature sensor situated on the right-hand rear wing panel.
5. Fit the bumper assembly by securing the absorber units and mounting brackets. On the rear end of the absorption units, ensure that the spacing washers are in position then check that the two large bolts securing the absorber units to the bumper are torque tightened to the figures specified in Chapter P.
6. Check that the fairing panel is aligned satisfactorily with the lower body panel; adjust if necessary by carefully pressing the panel up or down as required.

Check the rubber seals attached to the panel. If necessary, fit new seals (see Rear fairing panel and seals — To fit).

When carrying out any adjustment to the fairing panel alignment, care must be taken to avoid damaging the paintwork.

Rear bumper — To dismantle
Silver Shadow II, Bentley T2, Silver Wraith II and all Corniche cars

1. Remove the bumper assembly from the body by

releasing the bolts securing the two adapters or the energy absorption units to the bumper.

Detach the adaptors or the absorber units as applicable from the bumper and collect the spacing washers.

2. Remove the nuts and washers securing the side mouldings to the bumper, then remove both mouldings. Note the number of packing pieces to facilitate assembly.

3. Remove the 7/16 in. A/F nuts and washers securing the centre moulding to the bumper; remove the moulding.

4. Using a 4,76 mm. (0.187 in.) diameter drill, remove the two pop rivets securing the stainless steel finisher to the beam; remove the finisher.

Rear bumper — To assemble
Silver Shadow II, Bentley T2, Silver Wraith II and all Corniche cars

To assemble the rear bumper reverse the procedure given for removal noting the following points.

1. When fitting a new finisher and beam, temporarily locate the finisher into position on the beam with two ¼ in. UNF nuts and bolts.

2. Fit the side mouldings, complete with studs in each threaded insert, to the beam. Adjust the mouldings rearwards until the radiused end of the platform on the moulding locates inside the radius of the finisher; secure the mouldings in this position with ¼ in. UNF nuts.

3. Repeat Operations 3 to 6 inclusive from Front bumper - To assemble, Silver Shadow II, Bentley T2, Silver Wraith II and Corniche.

Rear bumper — To dismantle
Camargue

1. Remove the bumper assembly.

2. Remove the 1 in. A/F bolt securing each of the adapters or the energy absorption units to the bumper beam.

Detach the adapters or absorber units as applicable, from the beam and collect the spacing washers.

3. Remove the 7/16 in. A/F nuts and bolts securing the side mouldings to the bumper then remove both mouldings. Each moulding is secured by a bolt and washer, also two nuts and washers.

4. Remove the 7/16 in A/F nuts and washers securing the centre moulding; remove the moulding.

5. Using a 4,76 mm. (0.187 in.) diameter drill, remove the two pop rivets securing the stainless steel finisher to the beam; remove the finisher.

Rear bumper — To assemble
Camargue

To assemble the rear bumper reverse the procedure given for removal noting the following points.

1. Before tightening the moulding securing nuts and bolts ensure that the mouldings are correctly aligned with each other and are parallel with the top face of the finishers.

2. After securing the mouldings in their correct positions, slacken the three nuts securing the side mouldings as these mouldings have to be released when fitting the bumper to enable it to be attached to the side mounting brackets.

Note
Do not overtighten the moulding securing nuts and bolts as this will distort the face of the moulding.

3. Assemble the adapters, or the energy absorber units as applicable to the bumper beam; leave the securing bolts loose to facilitate lateral movement of the bumper when positioning it on the car.

Flexible closing pieces — To remove (see Fig. S91)
Camargue

1. Remove the rear bumper assembly.

2. Using a screwdriver, carefully lever out the two plastic drive fasteners securing the closing piece to the rear wing panel.

3. Detach the front edge of the closing piece from the retainer bracket; remove the closing piece.

Flexible closing pieces — To fit (see Fig. S91)
Camargue

To fit a flexible closing piece reverse the procedure given for removal noting the following points.

1. Prior to fitting the plastic drive fasteners, ensure that the front edge of the closing piece is trapped between the retainer bracket and the wing panel.

2. Always fit new drive fasteners as the retaining flanges of the fasteners will have been damaged during removal.

3. Check to ensure that the closing piece is held firmly in position by the drive fasteners.

Rear bumper side mounting brackets — To remove (see Fig. S91, inset)
Camargue

1. Remove the bumper assembly.

2. Remove the long 7/16 in. A/F bolt and self-locking nut securing the outer plate to the outer link; remove the outer plate.

3. Remove the rubber grommet sealing the links to the wing panel recess.

4. Remove the rubber blanking grommet from the access hole in the wing inner panel; this grommet is located just forward of the side mounting bracket aperture.

5. Remove the two ½ in. A/F bolts and washers securing the mounting bracket and link assembly to the body. These nuts and bolts are situated inside the wing recess. Remove the mounting bracket and link assembly.

6. To dismantle the inner and outer link assembly, remove the two bolts and self-locking nuts and seperate the assembly.

Rear bumper side mounting brackets — To fit (see Fig. S91, inset)
Camargue

To fit the side mounting bracket assemblies reverse the procedure given for removal noting the following points.

1. When assembling the inner and outer links, ensure that the pivot link bolts are fitted with the heads uppermost.

2. After fitting the mounting bracket and link assembly to the body, seal the blanking grommet into the access hole using Dunlop Adhesive S 1240.

Printed in England
© Rolls-Royce Motors Limited 1979

3. Ensure that the fibre packing piece fitted to the inner link is level with the end of the links sealing grommet. If the packing piece has become detached, or if a new inner link is being fitted, bond the packing piece to the link as follows.

Clean the bonding surface of the link and the packing piece with Bostik Cleaner 6001; allow approximately one hour to dry.

Apply Dunlop Adhesive S 1240 to the bonding surfaces of the link and the packing piece; allow between ten and thirty minutes for the adhesive to partly dry, then locate the packing piece to the link and press firmly into position.

4. Do not tighten the self-locking nut and bolt securing the outer link to the outer plate until the bumper has been fitted. This enables the bumper and side mounting bracket assembly to be aligned.

Rear fairing panel and seal — To remove (see Fig. S89)
Silver Shadow II, Bentley T2 and Silver Wraith II

1. Remove the bumper assembly.
2. Remove the six screws securing the fairing to the rear body panel; remove the fairing.
3. Carefully remove the seal from the rear of the fairing panel.

Corniche (see Fig. S89, inset B)

1. Remove the bumper assembly.
2. Remove the nine bolts and washers securing the fairing to the rear body panel. Remove the fairing together with the rubber sealing strip.
3. Carefully remove the seal and the rubber sealing strip from the rear and front of the panel respectively.

Camargue (see Fig. S91)

1. Remove the bumper assembly.
2. Using a 3,97 mm. (0.156 in.) diameter drill, remove the pop rivets securing the fairing to the rear body panel.
3. Carefully remove the seal from the rear of the fairing panel.

Rear fairing panel and seal — To fit

To fit the rear fairing panel and seal(s) reverse the procedure given for removal noting the following points.

Silver Shadow II, Bentley T2 and Silver Wraith II (see Fig. S89)

1. When fitting a new seal, clean the bonding surfaces of the panel and seal with Bostik Cleaner 6001; allow approximately one hour to dry.
2. Apply Dunlop Adhesive S 1240 to the bonding surfaces of the panel and seal; allow between ten and thirty minutes at approximately 21°C. (70°F.) for the adhesive to partly dry then, locate the seal to the panel and press firmly into position.

The seal should be positioned with the flat side of the seal towards the underside of the car.

Corniche (see Fig. S89, inset B)

1. When fitting a new seal to the rear of the fairing or a rubber sealing strip to the front of the fairing, clean the bonding surfaces of the panel and seal(s) with Bostik Cleaner 6001; allow approximately one hour to dry
2. Apply Dunlop Adhesive S 1240 to the bonding surfaces of the panel and also to the rear seal or front sealing strip; allow between ten and thirty minutes at approximately 21°C. (70°F.) for the adhesive to partly dry, then locate the seal or sealing strip to the panel and press firmly into position.

The rear seal should be positioned with the flat side of the seal towards the underside of the car.

Position the sealing strip along the rear edge of the fairing, aligning the holes in the strip with those in the fairing panel before pressing into position.

Camargue (see Fig. S91)

1. Repeat Operations 1 and 2 from Rear fairing panel and seal — To fit, Silver Shadow II, Bentley T2 and Silver Wraith II.
2. Carefully align the fairings before fixing and closing the pop rivets securing the fairing in position.

Energy absorption unit mounting bracket bushes — To renew
Cars destined for U.S.A. and Canada

Refer to the same title on Page S5 - 9 of the Front bumper section.

Bumper height — To check
Cars destined for U.S.A. and Canada

Refer to the same title on Page S5 - 9 of the Front bumper section.

Section S6

Everflex roof trim

Introduction

The illustrations in this section are of different cars being fitted with Everflex roof trim at various stages of assembly.

Precautions

Always consult the Special Precautions Section (on adhesives) at the beginning of Chapter S before fitting Everflex roof trim.

Use of adhesives

1. When using Bostik Primer 9252 all metal parts should be brush coated in the bonding areas. Ensure that the primer is applied at room temperature and at least one hour before the application of the adhesive.
2. When using Boscoprene Adhesive 2402 (Parts 1 and 2) apply to both bonding surfaces. Allow between 10 and 15 minutes to 'flash' dry at room temperature before bringing the surfaces together using maximum pressure.
3. When using Dunlop Adhesive L107 apply to both bonding surfaces and allow to dry for a minimum of 5 minutes. This adhesive possesses an excellent residual tack and may be joined at any time up to several hours after application, enabling repositioning without any need for reactivation.

It must be stressed that this adhesive has a very low bond strength and should be used in conjunction with mechanical attachments or other stronger adhesives.

Everflex roof trim — To remove

Silver Wraith II

1. Remove the rear seat cushion, rear seat squab and side cheek pads (see Section S12).
2. Release the bottom edge of the cantrail trims to give access to the nut and washer securing each Rolls-Royce badge to the outer tonneau panels; remove the badges.
3. Remove the rear window and windscreen and their associated trim (see Section S8).
4. Remove the self-tapping screws and brass strips securing the Everflex inside the door apertures.
5. Remove the chrome strip and trim surrounding the base of the rear window.

Using a slim, blunt instrument release one end of the Everflex trim and rubber insert and pull steadily along the length of trim until removed.

Release the self-tapping screws and remove the chrome finisher.

6. On cars destined for the U.S.A. and Canada, remove the fuel filler door (see Section S7).

Carefully lever the chrome finishing plate from the base of the fuel filler aperture.

Using a 3,17 mm. (0.125 in.) diameter drill, remove the pop rivets securing the brass strip around the edges of the fuel filler aperture; remove the strip.

7. Starting at the bottom of each 'A' post, completely peel off the Everflex from the roof, tonneau and around the rear window.

If necessary, peel off the Everflex from the fuel filler door.

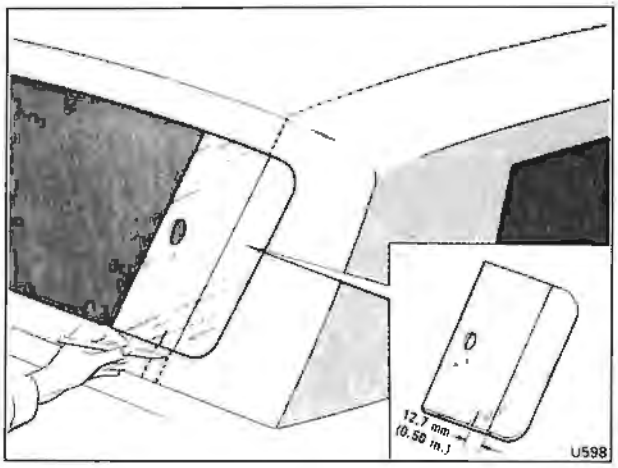

Fig. S92 Locating the position of the Everflex centre panel from the roof panel styling lines

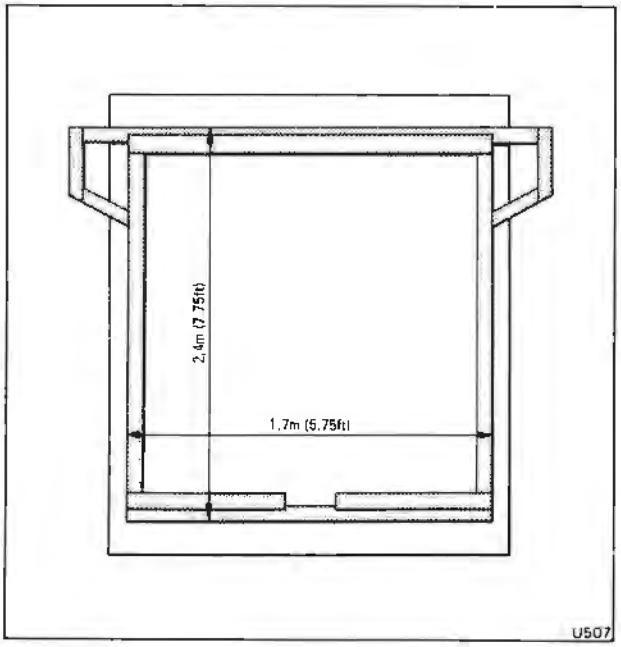

Fig. S93 Basic jig for Everflex roof trim

Printed in England

© Rolls-Royce Motors Limited 1980

January 1980

TSD 4200

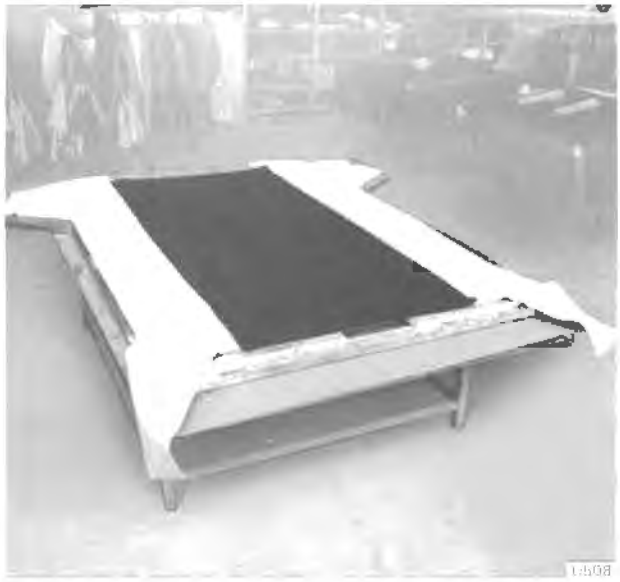

Fig. S94 Tacking the Union Cloth to the Everflex

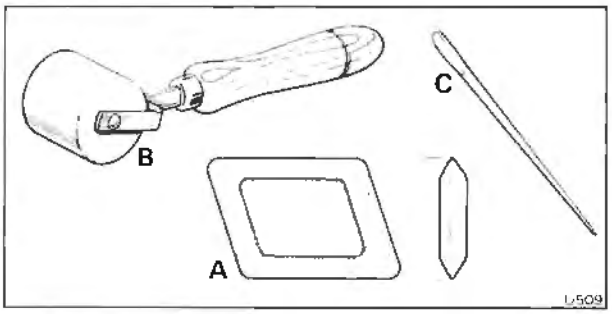

Fig. S95 Tools
A Grooving tool
B Roller
C 'Trimmer's regulator'

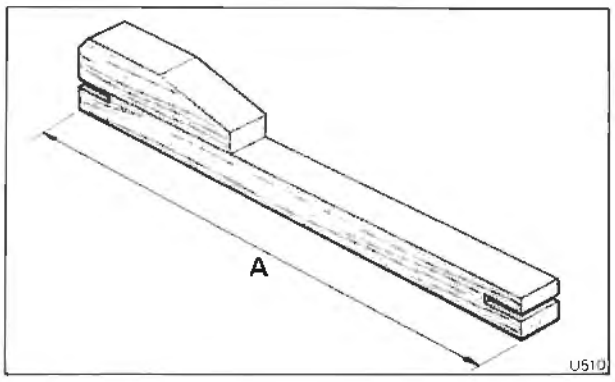

Fig. S96 Wooden pegs
A 53 cm. (21.0 in.) – For use in windscreen aperture
43 cm. (17.0 in.) – For use in rear window aperture

Everflex roof trim – To fit
Silver Wraith II

1. Thoroughly mask off all the paintwork, chrome, etc., except the area vacated by the Everflex.
2. Completely remove the old adhesive from the roof, tonneau sides, 'A' posts and rear window areas as follows.

Coat the old adhesive with Aerolac Thinners then, carefully remove the adhesive using wire wool. Finally, remove any further imperfections by rubbing down all areas with 180 wet or dry abrasive paper, taking care not to rub through the paintwork.

3. Ensure that all areas of the roof, where bonding is to take place i.e. outer roof panels, tonneau sides, cantrails, 'A' posts, etc., are clean. Then, apply Bostik Primer 9252 allowing approximately one hour to dry.
4. Using a soft pencil, extend the roof panel styling line up to the rear window aperture (see Fig. S92) and the windscreen aperture.
5. Fit a template into the side of the rear window aperture (see Fig. S92). Ensure that the line on the template runs vertically when the template is placed in the aperture.

Align the template line with the pencil line marked on the roof panel then, extend the lines onto the panel below the aperture (see Fig. S92).

Repeat this operation on the opposite side of the aperture.

6. Wipe the outer surface of the Everflex with a clean lint-free cloth. Any creases in the Everflex must be removed at this stage by holding the Everflex in a current of hot air.
7. Using a jig similar to the one shown in Figure S93, centralize and tack the four corners of the centre panel to the frame. Ensure that the centre panel is taut then, lightly tack the side panels to the frame.
8. Tack the black Union Cloth into position on the Everflex (see Fig. S94). Ensure that the cloth is level with the Everflex at the front and rear and overlaps the stitched roof seams by approximately 8 cm. (3.0 in.).
9. Apply Dunlop Adhesive L107 to the Union Cloth to within approximately 3 cm. (1.0 in.) of the sides and 8 cm. (3.0 in.) of the front and rear.
10. With the help of an assistant, remove the Union Cloth from the Everflex laying it in a convenient

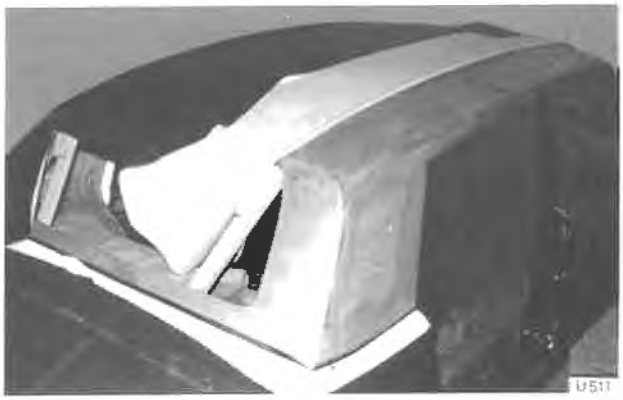

Fig. S97 **Centralizing the Everflex, tacking it into position and folding back the sides**

position to 'flash' dry (i.e. allow the adhesive to partially dry).

11. Apply Dunlop Adhesive L107 to the centre section of the Everflex i.e. between the stitching lines, and allow to 'flash' dry.

12. With the help of an assistant centralize and stick the Union Cloth to the Everflex.

13. Using a tool similar to the one shown in Figure S95, item A, carefully work the tool along the inside of the stitched seams.

Using a trimming knife, cut the Union Cloth exactly to the inside of the stitched seams.

When carrying out this operation, care must be taken to avoid cutting into the Everflex i.e. pull the Union Cloth carefully against the knife.

14. Apply a sealing coat of Boscoprene Adhesive 2402 to the sides of the Everflex placing particular emphasis on the stitched seams; leave to dry.

15. Using wooden pegs similar to the one shown in Figure S96, place them into position in the front windscreen and rear window apertures.

16. Place the trim onto the roof, aligning the stitched seams with the pencilled guide lines. Then, tack the trim to the wooden pegs in the rear window aperture (see Fig. S97).

17. Stretch the Union Cloth and Everflex along the length of the roof, align the stitched seams with the pencilled guide lines, then tack the trim to the wooden pegs in the windscreen aperture.

18. Fold back the sides of the Everflex until the stitched seams are visible. Apply Boscoprene Adhesive 2402 to the seams and to the ridged areas of the roof (see Fig. S97); allow to 'flash' dry.

19. Working one side at a time, pull the trim until the stitched area aligns with the ridge; stick the trim into position along the length of the ridge.

Using a roller (see Fig. S95, item B) carefully align the seam with the ridge until a perfectly straight line is achieved; leave to dry.

20. Remove the wooden pegs from the windscreen and rear window apertures.

21. Fold back the Everflex and Union Cloth at the windscreen or rear window (see Fig. S98).

Apply Boscoprene Adhesive 2402 to the Union Cloth and the roof; allow to 'flash' dry.

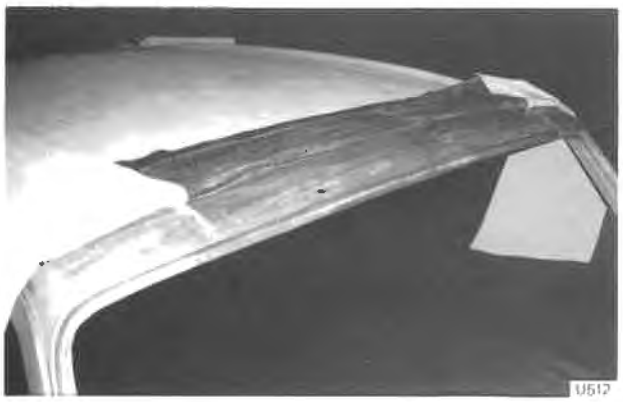

Fig. S98 Adhesive applied to Union Cloth and roof

Bring the surfaces together stretching the Union Cloth into position (see Fig. S99) then cut the cloth parallel with the inside face of the aperture.

22. Apply Boscoprene Adhesive 2402 to the Everflex and the Union Cloth; allow to 'flash' dry.

Bring the surfaces together and stick the Everflex to the edge of the roof. Leave the excess trim temporarily hanging down (see Fig. S100).



Fig. S99 Stretching and sticking the Union Cloth



Fig. S100 Stretching and sticking the Everflex



Fig. S101 Stretching the Everflex across the sides

Printed in England

© Rolls-Royce Motors Limited 1980

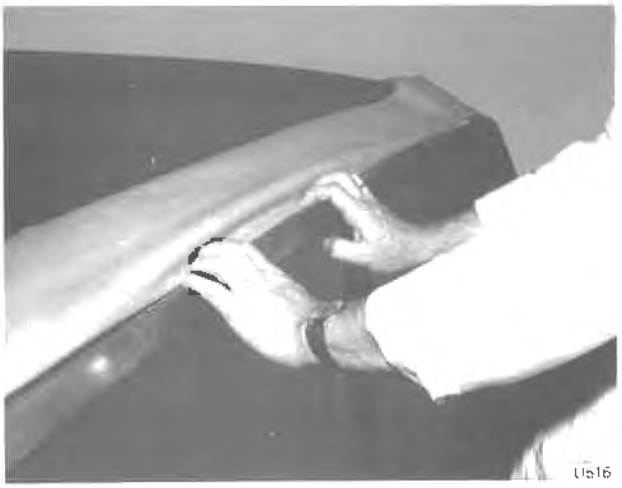

Fig. S102 Pressing the Everflex into the rain channel



Fig. S103 Running a grooving tool carefully along the rain channel



Fig. S104 Sticking the Everflex to the outer face of the cantrail

23. Repeat Operations 21 and 22 on either the windscreen or rear window as applicable.
24. Working one side at a time, fold back the Everflex trim sides and apply Boscoprene Adhesive 2402 to the trim and roof; allow to 'flash' dry.

Carefully stretch the Everflex across the sides (see Fig. S101) and press into the rain channel (see Fig. S102).

Using a grooving tool, carefully press the Everflex into the rain channel. Do not apply too much pressure when using this tool (see Fig. S103).

Fold the Everflex over the outer face of the cantrail and stick into position (see Fig. S104). Leave the excess trim hanging down.
25. At this stage leave the roof section to set for sixteen hours to allow the adhesive to cure.
26. To facilitate the fitting of the windscreen, it is necessary to unpick the stitches on the overhanging Everflex trim as far as the top of the aperture.

Using a trimming knife, carefully cut out the extra thickness of seam to enable the Everflex to fit closely against the aperture (see Fig. S105).

Tie the last stitch on the underside of the Everflex.
27. Reduce the length of overhanging trim to approximately 5 cm. (2.0 in.). Cut the Everflex in the top corners of the windscreen aperture for easier fitting, ensuring that the cuts do not extend further than those shown in Figure S106.
28. Apply Boscoprene Adhesive 2402 to the Everflex trim and to the windscreen aperture; also to the 'A' post approximately 10 cm. (4.0 in.) from the bottom of the post. Allow to 'flash' dry.

Bring the surfaces together, ensuring that the Everflex fits perfectly over the 'A' post contours then, press it into the windscreen aperture. Run a grooving tool around the aperture to ensure that the trim fits into the corners then cut the trim around the inside of the aperture (see Fig. S106).
29. Fold back the Everflex from the bottom of the 'A' post.

Using the brass strips supplied, fit the strip around the bottom of the 'A' post, parallel with the bottom edge of the windscreen aperture (see Fig. S107, inset A).

Mark and cut the excess length from the strip.

Cut the excess trim from the bottom of the 'A' post to approximately 12 mm. (0.50 in.) below the brass strip.



Fig. S105 Cutting out the extra thickness of seam

Apply Boscoprene Adhesive 2402 to the brass strip and the bottom edge of trim; allow to 'flash' dry.

Holding the brass strip in position, bring the surfaces together pressing firmly against the brass strip then, fold back the trim together with the brass strip. The strip is now it its correct position (see Fig. S108).

30. Apply Boscoprene Adhesive 2402 to the edge of the trim and the rear of the brass strip; allow to 'flash' dry.

Cut and fold the trim under the brass strip.

31. Apply Boscoprene Adhesive 2402 to the trim and the bottom of the 'A' post; allow to 'flash' dry.

Carefully stick the trim to the 'A' post, pressing the brass strip firmly into position (see Fig. S107).

Cut and remove the excess trim from the windscreen aperture.

32. Make a series of cuts in the Everflex trim at the top of the 'A' post (see Fig. S106). Ensure that the cuts will not show inside the door aperture when the brass strips are fitted.

33. Cut the Everflex at the top of the 'B-C' post (see Fig. S107, inset B). The chrome finisher will then secure the trim at this point.

34. Apply Boscoprene Adhesive 2402 to the trim and door aperture; allow to 'flash' dry.

Carefully pull the trim into position inside the front door aperture ensuring that no folds or creases occur. Run a grooving tool around the aperture then, cut off the excess trim leaving approximately 1,5 mm. (0.062 in.) gap between the edge of the trim and the inner corner of the door aperture (see Fig. S109).

35. To facilitate the fitting of the rear window, it is necessary to unpick the stitches on the overhanging Everflex trim as far as the top of the aperture.

Using a trimming knife, carefully cut out the extra thickness of seam to enable the Everflex to fit closely against the aperture (see Fig. S105).

Tie the last stitch on the underside of the Everflex.

36. Stretch the trim over the top of the tonneau panel, pulling the corner approximately 8 cm. to 10 cm. (3.0 in. to 4.0 in.) inwards i.e. towards the centre of the car (see Fig. S110).

37. Using a soft pencil, mark the outline of the rear door aperture and rear window aperture on the inside of the Everflex trim.

Lift the trim. The area between the pencil lines to be covered in adhesive is now clearly visible (see Fig. S111).

38. Before sticking the Everflex beneath the rear window aperture, mark an arrow or similar mark on the



Fig. S107 Detail finishing
A Finished 'A' Post – Brass strip running parallel with the bottom edge of the windscreen aperture
B Position of the Everflex at the top of the 'B-C' post



Fig. S108 Fitting the brass strip



Fig. S106 Fitting the Everflex into the top corners of the windscreen and rear window apertures

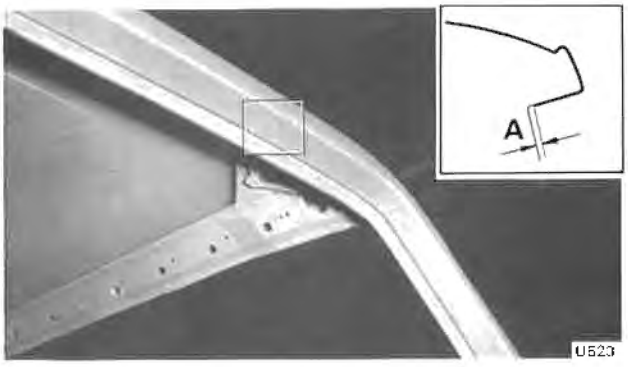

Fig. S109 Cut-off line inside door aperture
A Approximately 1,5 mm. (0.062 in.)



Fig. S110 Stretching the trim over the top of the tonneau



Fig. S111 Area between pencil lines to be coated with adhesive



Fig. S112 Fitting the Everflex into the corners of the fuel filler door aperture

protective cloth or tape (see Fig. S116), immediately below the outer lines shown in Figure S92. This indicates where the Everflex centre panel will fit when the side panels are secured in position.

39. Apply Boscoprene Adhesive 2402 to the trim and body panel; allow to 'flash' dry.

Bring the surfaces together stretching the trim into position as described in Operation 36. Ensure that the trim is smooth and free from folds and creases.

Cut the Everflex along the inside lines marked on the panel situated beneath the rear window aperture, then cut the trim around the base, leaving approximately 1,5 mm. (0.062 in.) gap between the edge of the trim and the bottom of the roof.

Note

On cars destined for the U.S.A. and Canada, apply Boscoprene Adhesive 2402 around the edges of the fuel filler door aperture.

Cut the centre section of the Everflex trim from inside the door aperture leaving approximately 12,7 mm. (0.50 in.) of trim to fold into the aperture.

Make a series of small cuts in the corners of the trim to facilitate fitting (see Fig. S112). Ensure that the cuts do not extend beneath the brass strip.

Fold the trim into position ensuring that no creases occur.

40. Fit the trim around the rear door aperture. Using a template, mark and then make a diagonal cut into the top rear corner of the aperture trim to facilitate the fitting procedure (see Fig. S113, inset A).

41. Apply Boscoprene Adhesive 2402 to the trim and rear door aperture; allow to 'flash' dry.

Carefully pull the trim into position inside the rear door aperture ensuring that no folds or creases occur. Run a grooving tool around the aperture then, remove the excess trim leaving approximately 1,5 mm (0.062 in.) gap between the edge of the trim and the inner corner of the door aperture (see Fig. S109).

42. Cut and fit triangular pieces of Everflex into the top rear corners of the rear door apertures (see Fig. S113, inset B). Apply Boscoprene Adhesive 2402 to both bonding surfaces, allow to 'flash' dry, then press into position.

43. Fold the trim around the sides of the rear window aperture. Produce a series of cuts in the corners to facilitate assembly.

44. Apply Boscoprene Adhesive 2402 to the trim and sides of the rear window aperture; allow to 'flash' dry.

Fold the trim around the rear window aperture. Run a grooving tool around the aperture then, cut and remove the excess trim from the inside of the aperture.

45. Repeat Operation 43 along the top of the rear window aperture.

46. Lay the supplied centre panel trim beneath the rear window. Check to ensure that the ends of the panel align with the arrows or lines previously marked (see Operation 38).

47. Cut and fit a piece of black Union Cloth to abut the ends of the side trim i.e. to fit between the stitched seams of the centre panel (see Fig. S114).

48. Apply Boscoprene Adhesive 2402 to the Union Cloth and below the rear window aperture; allow to

'flash' dry.

With the help of an assistant, position the bottom edge of the Union Cloth parallel and above the holes around the base of the rear window then, bring the surfaces together (see Fig. S114).

Cut the Union Cloth level with the rear window aperture.

49. Mark and cut the brass strips to the exact width of the centre panel.

50. Unpick the stitches and cut out two small areas of Everflex from the end pockets of the centre panel (see Fig. S115).

These areas should be cut from the top and bottom inside edges to ensure that a double thickness of trim does not occur in the rear window aperture and beneath the chrome finishing strip.

Tie the last stitches on the underside of the Everflex.

51. Apply Dunlop Adhesive L107 to the inside of the pockets and the brass strips, allow to 'flash' dry.

Slide the brass strips inside the pockets and press firmly together (see Fig. S115).

52. Apply Boscoprene Adhesive 2402 to the centre panel trim, the Union Cloth and the area immediately below it. Also, apply the adhesive to the window aperture and the ends of the side trim; allow to 'flash' dry.

Ensure that the adhesive does not extend further than the area covered by the centre panel.

With the help of an assistant, lay the centre panel into position aligning the ends of the stitched seams with the arrows previously marked (see Operation 38), press firmly into position (see Fig. S116).

Fold the trim into the window aperture. Run a grooving tool around the aperture then, cut and remove the excess trim from the inside of the aperture.

Cut the excess trim from the bottom of the centre panel ensuring that the Everflex will be trapped when the chrome finishing strip is fitted but will not show beneath it.

Operations 53 to 57 inclusive are applicable to cars destined for U.S.A. and Canada only.

Fit the Everflex onto the fuel filler door as follows.

53. Using fine abrasive paper, remove any surplus adhesive and produce a smooth even surface on the outer face of the door.

Brush off any remaining glass fibre dust from the door and coat the outer surface and inside edges with Bostik Primer 9252; allow approximately one hour to dry.

Using a soft pencil, mark the outline of the door onto the Everflex then, cut the Everflex leaving approximately 12,7 mm. (0.50 in.) overlap extending beyond the pencil lines.

Apply Boscoprene Adhesive 2402 to the outer face of the door and also within the pencil lines marked on the Everflex; allow to 'flash' dry. Bring the surfaces together ensuring that the outer surface of the door is free from creases etc.

Cut the Everflex in the corners to facilitate fitting, ensuring that the cuts will not show on the edges of the

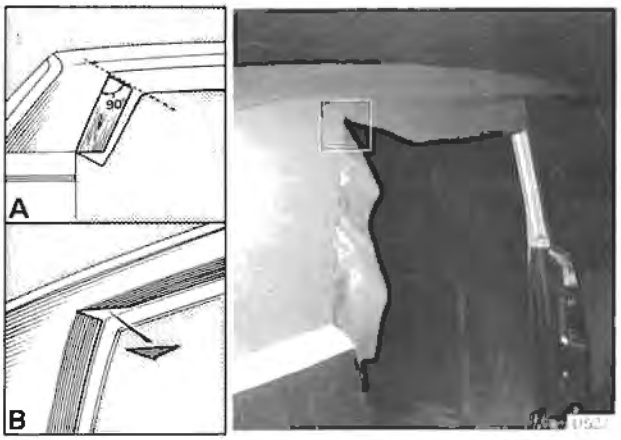

Fig. S113 Fitting the Everflex around the rear door aperture

A Marking the position of the diagonal cut

B Inserting the small triangular piece of Everflex



Fig. S114 Fitting Union Cloth beneath the rear window aperture



Fig. S115 Fitting a brass strip into a centre panel end pocket

Printed in England

© Rolls-Royce Motors Limited 1980



Fig. S116 Fitting the Everflex centre panel beneath the rear window aperture



Fig. S117 General view of fuel filler door, brass strip, chrome plate and finishing strip

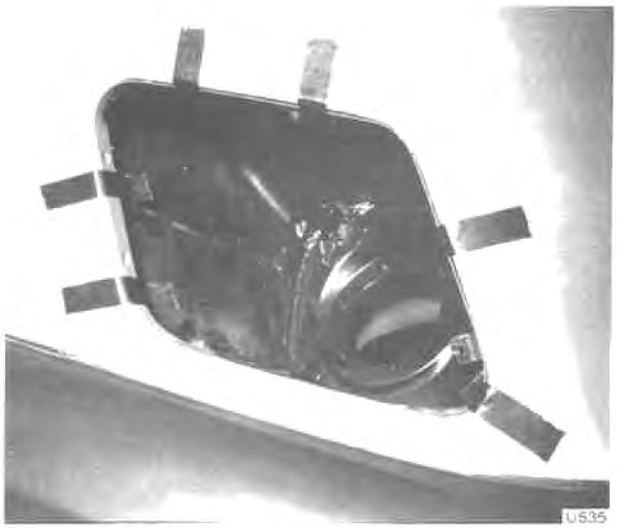

Fig. S118 Fitting the brass strip around the fuel filler door aperture

door (see Fig. S117).

Apply Boscoprene Adhesive 2402 to the edges of the Everflex and to the inside edges of the door; allow to 'flash dry. Fold the Everflex onto the back of the door pressing it carefully into position (see Fig. S117).

54. Bend the brass strip around the fuel filler door aperture as follows.

Place the cut-outs in the strip into the top corners of the aperture then, carefully bend the strip around the circumference of the aperture.

Secure the brass strip in this position using tape (see Fig. S118).

If necessary to ensure correct alignment, bore out the holes to accept the pop rivets securing the brass strip using a 3,17 mm. (0.125 in.) diameter drill in a small right-angled gun.

Fix and close the pop rivets into position. Ensure that only cadmium plated copper pop rivets are used.

If necessary, using a small hammer, tap the brass strip into position (i.e. ensure that the strip fits perfectly against the aperture).

Carefully file the heads of any projecting pop rivets level with the brass strip.

55. Locate the chrome finishing strip around the base of the rear window with Glasticon Sealer. Insert the self-tapping screws, except those immediately below the fuel filler aperture, but do not fully tighten them at this stage.

56. Apply two lines of Bostik Seelastik to the rear of the chrome plate fitted at the base of the fuel filler aperture. Slide the plate behind the finishing strip and into position inside the aperture (see Fig. S117). Remove any surplus Seelastik.

Use black Seelastik on cars fitted with dark coloured Everflex and cream Seelastik on those fitted with light coloured Everflex.

57. If necessary, to ensure correct alignment of the chrome plate or when fitting a new plate proceed as follows

Using the existing holes in the outer finishing strip as a guide, drill through the plate. Insert the self-tapping screws through the finishing strip and plate then fully tighten all the screws securing the finishing strip around the base of the rear window.

58. Using a 'trimmer's regulator' (see Fig. S95, item C) fit the rubber insert into the finishing strip channel as follows.

Starting in the centre below the rear window aperture, work the rubber insert outwards from the centre of the rubber. Constantly push the rubber backwards to avoid sliding or stretching taking place.

Cut both ends of the rubber slightly longer than the channel then push them into position.

59. Fit the Everflex strip over the rubber and into the channel as follows.

Starting in the central position work the Everflex outwards pushing it into place with the 'regulator'.

Cut and chamfer both ends of the Everflex slightly longer than the channel. Apply Dunlop Adhesive L107 to the ends of the Everflex and rubber insert. Allow to 'flash' dry before pushing the Everflex into the channel.

60. Apply Bostik Seelastik to the back of the Rolls-Royce badges before fitting them to the outer panels. Remove any surplus Seelastik.

Use black Seelastik on cars fitted with dark coloured Everflex and cream Seelastik on those fitted with light coloured Everflex.

61. Fit the brass strips securing the Everflex trim inside the door apertures.

62. Fit the windscreen and rear window and their associated trim (see Section S8).

63. Fit the side cheek pads, rear seat squab and rear seat cushion (see Section S12).

64. Ensure that the roof is cleaned thoroughly to remove any traces of dirt or adhesive residues. If any adhesive is present, remove it with a clean cloth damped with Genklene. **Extreme care must be taken to avoid Genklene coming into contact with any paintwork.**

65. Using a clean cloth or sponge, apply a thin coat of Everflex Top Dressing to all parts of the Everflex. If any of the liquid is spilt onto the paintwork remove it before it dries.

After fifteen minutes apply a second coat of Top Dressing.

Clean the cloth or sponge and any container used by rinsing them with water.

Further applications may be required at approximately 18 month intervals.

When cleaning the Everflex, refer to Chapter A.

Printed in England

© Rolls-Royce Motors Limited 1980

Section S7

Exterior trim
Contents

	Page
Radiator shell — To remove	S7 - 3
Radiator shell — To fit	S7 - 3
Radiator shell — To dismantle and assemble (Rolls-Royce)	S7 - 4
Radiator shell — To dismantle and assemble (Bentley)	S7 - 4
Air deflector panel	S7 - 4
Undersheets	S7 - 5
Air intake grille panel	S7 - 5
Water channel moulding strips	S7 - 6
Body waist moulding strips	S7 - 6
Door waist moulding strips	S7 - 7
Door capping finishers	S7 - 7
Body sill moulding strips	S7 - 8
Spare wheel carrier	S7 - 9
Jacking door	S7 - 10
Fuel filler door — Cars fitted with the fuel tank beneath the luggage compartment floor	S7 - 10
Fuel filler door — Cars fitted with the fuel tank behind the rear seat	S7 - 11

Printed in England

©Rolls-Royce Motors Limited 1980

January 1980

TSD 4200

Section S7

Exterior trim

Radiator shell – To remove
Silver Shadow II, Bentley T2, Silver Wraith II and Corniche

1. Raise the bonnet.
2. From beneath the car, remove the two 7/16 in. A/F setscrews and washers securing the radiator shell to the mounting brackets.
3. Remove the two 7/16 in. A/F setscrews and washers securing the outer top edges of the radiator shell to the deflector panel.
4. Support the radiator shell assembly.
5. Remove the two 7/16 in. A/F setscrews and washers securing the radiator shell through the bonnet centre stop bracket; collect the reinforcement plate fitted between the shell and the stop bracket (see Fig. S119).
6. Lift the radiator shell assembly until the lower end is clear of the front bumper then remove the assembly from the car.

Care must be taken when removing the radiator shell to avoid damaging the paintwork.

Radiator shell – To fit
Silver Shadow II, Bentley T2, Silver Wraith II and Corniche

To fit the radiator shell reverse the procedure given for removal noting the following points.

1. Ensure that the two rubber strips are in position on the outer edges of the shell before fitting the shell to the car.
2. After fitting the radiator shell, check the radiator to bonnet clearance and alignment; adjust if necessary (see Section S2, Fig. S26).

If adjustment is required and the setting of the bonnet has not been disturbed, slacken the setscrews securing the radiator shell. Adjust the position of the shell until it fits satisfactorily, then tighten the setscrews.

Radiator shell – To remove
Camargue

1. Raise the bonnet.
2. Remove the four 7/16 in. A/F setscrews and washers securing the radiator shell to the deflector panel.
3. Remove the two 7/16 in. A/F setscrews and washers securing the radiator shell through the bonnet centre stop bracket. Collect the reinforcement plate fitted between the shell and the stop bracket (see Fig. S119).
4. Lift the radiator shell assembly until it is free from the mounting pegs on the front wings then remove the assembly from the car.

Care must be taken when removing the radiator shell to avoid damaging the paintwork.

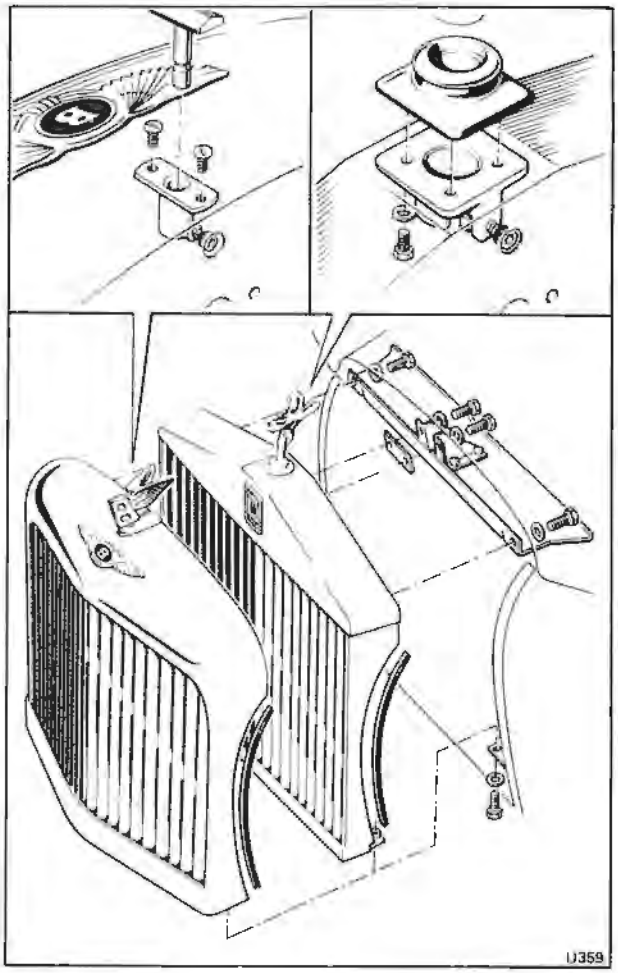

Fig. S119 Rolls-Royce and Bentley radiator shells and fittings

Radiator shell – To fit
Camargue

To fit the radiator shell reverse the procedure given for removal noting the following points.

1. Ensure that the two rubber strips are in position on the outer edges of the shell before fitting the shell to the car.
2. Ensure that the two rubber grommets are correctly located in the shell attachment brackets and that they are in good condition. Fit new grommets if necessary.
3. Ensure that the shell locates correctly on the mounting peg attached to each front wing.
4. After fitting the radiator shell, check the radiator to bonnet clearance and alignment; adjust if necessary (see Section S2, Fig. S26).

Printed in England
© Rolls-Royce Motors Limited 1980

If adjustment is required and the setting of the bonnet has not been disturbed, slacken the setscrews securing the radiator shell. Adjust the position of the shell until it fits satisfactorily, then tighten the setscrews.

Radiator shell — To dismantle
Cars fitted with a Rolls-Royce radiator (see Fig. S119)
1. Remove the six 7/16 in. A/F nuts and washers securing the grille to the radiator shell; remove the grille from the shell.

On Camargue cars, remove the three 2BA screws and washers securing the lower end of the grille to the shell. Also, remove the three 7/16 in. A/F nuts and washers securing the grille to the upper inside face of the shell; remove the grille from the shell.

2. Remove the Rolls-Royce 'flying lady' mascot by slackening the socket headed screw securing it to the shell; lift the mascot from its base. Access to the socket headed screw is through the central hole in the upper rear face of the radiator shell (see Fig. S119, inset).
3. On cars destined for countries where the mascot is not required, a chromed finisher button is fitted. To remove the button, follow the same procedure described for removing the mascot. Care must be taken when slackening the socket headed screw as the spring, fitted beneath the button, will eject the button from the mounting boss if released too quickly.
4. Remove the mascot clamping boss from the shell by releasing the four 2BA setscrews securing the boss to the shell (see Fig. S119, inset).

Note
Do not attempt to remove the Rolls-Royce badge fitted on the front of the radiator shell.

Radiator shell — To assemble
Cars fitted with a Rolls-Royce radiator (see Fig. S119)
To assemble the radiator shell reverse the procedure given for dismantling noting the following point.
1. Ensure that the mascot or finisher button is located correctly in the clamping boss and is held securely by the socket headed screw.

Radiator shell — To dismantle
Cars fitted with a Bentley radiator (see Fig. S119)
1. Remove the eight 2BA setscrews securing the triangular shaped bottom plate to the radiator shell; remove the plate.
2. Remove the setscrews securing the lower edge of the grille to the shell.
3. Remove the four 7/16 in. A/F setscrews securing the two grille upper support brackets to the shell. Remove the grille together with the brackets.
4. Remove the Bentley winged 'B' mascot. Slacken the socket headed screw securing it to the shell then lift the mascot from its base. Access to the socket headed screw is through the central hole in the upper rear face of the radiator shell (see Fig. S119, inset).
5. On cars where a mascot is not required, a motif is fitted. To remove the motif, follow the same procedure described for removing the mascot.
6. Remove the two 2BA setscrews securing the clamping boss to the shell; remove the clamping boss.
7. To remove the winged 'B' badge fitted to the front of the radiator proceed as follows.

Remove the two 2BA nuts and washers securing the badge to the shell then remove the badge. The nuts, shakeproof washers and waved washers are situated on the inner face of the shell.

Radiator shell — To assemble
Cars fitted with a Bentley radiator (see Fig. S119)
To assemble the radiator shell reverse the procedure given for dismantling noting the following point.
1. Ensure that the mascot or motif is located correctly in the clamping boss and is held securely by the socket headed screw.

Air deflector panel — To remove and fit
Silver Shadow II, Bentley T2, Silver Wraith II and Corniche cars destined for countries other than Canada, Japan and the U.S.A.
1. From beneath the car, remove the ten 'Pozidriv' screws securing the air deflector panel to the body. Remove the deflector panel.
2. To fit the panel, reverse Operation 1 ensuring that the ten 'Fastex' nuts are positioned securely in the lower body panel prior to fitting the air deflector panel.

Air deflector panel — To remove (see Fig. S120)
Camargue cars destined for countries other than Canada, Japan and the U.S.A.
1. Disconnect the battery.
2. Remove both front fog lamps by disconnecting the electrical leads at the cable connectors. Then, remove the bolt and washer securing each fog lamp to its mounting bracket.
3. Remove the front bumper (see Section S5).
4. Remove the front number plate by releasing the three mounting brackets securing it to the air deflector panel.

Each bracket is secured by two 2BA nuts, bolts and washers.

5. Remove the 7/16 in. A/F nut and bolt securing each deflector panel stay to the front apron. Remove both stays.
6. Remove the six 2BA nuts and bolts securing the fog lamp mounting brackets to the panel. Remove both brackets.
7. Remove the 2BA nuts, bolts and washers securing the upper flanges of the deflector panel to the apron. Also, remove the pop rivets securing the sides of the deflector panel; remove the air deflector panel.

Air deflector panel — To fit (see Fig. S120)
Camargue cars destined for countries other than Canada, Japan and the U.S.A.
To fit the air deflector panel reverse the procedure given for removal noting the following points.
1. Apply black Glasticon Sealer to the joint faces on the front apron and to the deflector panel flanges before fitting the deflector panel.
2. Prior to fitting the front bumper, 'touch-in' the heads of the four 2BA screws securing the sides of the deflector panel with 'Tensulac' black paint.

Front wing undersheet — To remove

1. Raise the bonnet.
2. Raise the car and remove the front wheels.
3. Remove the plastic domed nuts from the undersheet screws protruding into the engine compartment.
4. Remove the self-tapping screws securing the rear half of the undersheet to the wheelarch flanges; remove the undersheet.

Note that on certain cars, an access plate is fitted to the rear undersheets secured by four self-tapping screws.

5. Remove the self-tapping screws securing the front half of the undersheet to the wheelarch flanges; remove the undersheet.

Front wing undersheet — To fit

To fit the undersheet reverse the procedure given for removal noting the following points.

1. Using Bostik Seelastik, seal the undersheets to the wheelarch flanges.
2. If an access plate was removed from the rear half of the undersheets, seal the plate to the undersheet with Bostik Seelastik.

Air intake grille panel — To remove (see Fig. S121) Silver Shadow II, Bentley T2, Silver Wraith II and Corniche

1. Raise the bonnet.
2. Remove the five 2BA bolts and washers securing the front flange of the grille to the scuttle channel.
3. Draw the grille panel forward until it is disengaged from its retaining tabs on the rear edge of the grille aperture.
4. Carefully lift the panel and pull the tube from the windscreen washer jet.
5. Remove the grille panel.

Air intake grille panel — To fit (see Fig. S121) Silver Shadow II, Bentley T2, Silver Wraith II and Corniche

To fit an air intake grille panel reverse the procedure given for removal noting the following points.

1. If a new foam filter element is being fitted, it should be fixed to the mesh support panels at the outer edges using Bostik Sealer 771.
2. Ensure that the rear edge of the grille panel is fully engaged with the retaining tabs before securing the front edge in the scuttle channel.

Air intake grille panel — To remove (see Fig. S122) Camargue

1. If the windscreen wiper arms are not removed, ensure that they are in the vertical position. This will provide increased clearance between the wiper arms and the intake panel, enabling the panel to be removed and fitted more easily.

To obtain this vertical position, turn the windscreen wipers switch to the first anti-clockwise position then, using the ignition key as an on/off switch, stop the wiper arms in the required position.

2. Raise the bonnet.
3. Remove the 2BA screws and washers securing the front flange of the intake panel to the scuttle channel.

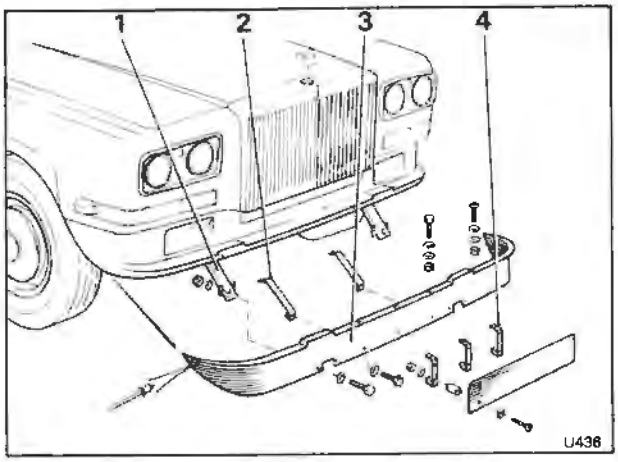

Fig. S120 Removing an air deflector panel (Camargue)

1 Fog lamp mounting bracket
2 Deflector panel stay
3 Deflector panel
4 Number plate mounting bracket

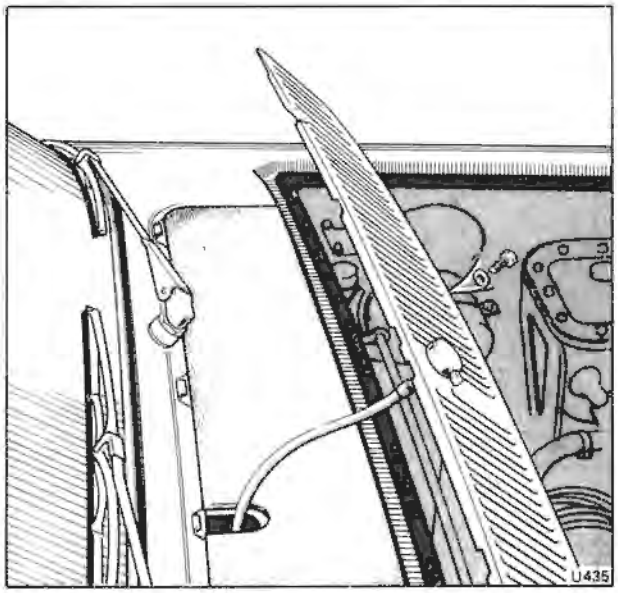

Fig. S121 Removing an air intake grille panel (Silver Shadow II, Bentley T2, Silver Wraith II and Corniche)

4. Draw the panel forward until it is disengaged from the eight dowels on the body scuttle, then lift the forward edge of the panel until the key plates on the sides of the panel are disengaged from the two body dowels.
5. Carefully lift the panel and pull the tubes from the windscreen washer jets.
6. Remove the grille panel.
7. To remove the foam filter elements from the intake panel, proceed as follows.
8. Remove the nuts securing the two screen washer jet assemblies to their support brackets on the underside of the grille panel; lift out both jets.

Printed in England
© Rolls-Royce Motors Limited 1980

9. Remove the eight 8BA nuts and washers securing each of the mesh filter support plates to the underside of the intake panel.
10. Remove the two mesh filter support plates from the intake panel.
11. Remove the foam filter elements.
12. If required, the two moulded grilles located in the recesses of the panel top face can now be removed.

Air intake grille panel — To fit (see Fig. S122)
Camargue
To fit the air intake grille panel, reverse the procedure given for removal noting the following points.
1. The 8BA studs are a press fit in the moulded grilles. When fitting a stud, first apply Loctite Adhesive IS495 to the stud and press it into the grille. Allow the adhesive to dry before fitting the grille into the panel.
2. Before fitting the intake grille panel to the scuttle ensure that the following conditions apply.
3. The air intake filters and screen washer jets are fitted to the panel.
4. A nylon bush is fitted to each of the eight holes in the rear flange face of the panel.
5. A rubber washer is fitted to the body dowel on each side of the scuttle.

Water channel moulding strips — To remove
Camargue
When carrying out the following operations care must be taken to avoid damaging the paintwork and chrome trim.
1. Remove the small centre plate covering the joint between the front and rear sections of the water channel moulding strips.

Using a wooden block to press against, carefully lever the lower edge of the plate downwards and outwards until it is free of the channel flange.
2. Remove the front and rear sections of the moulding strips from the channel flange.

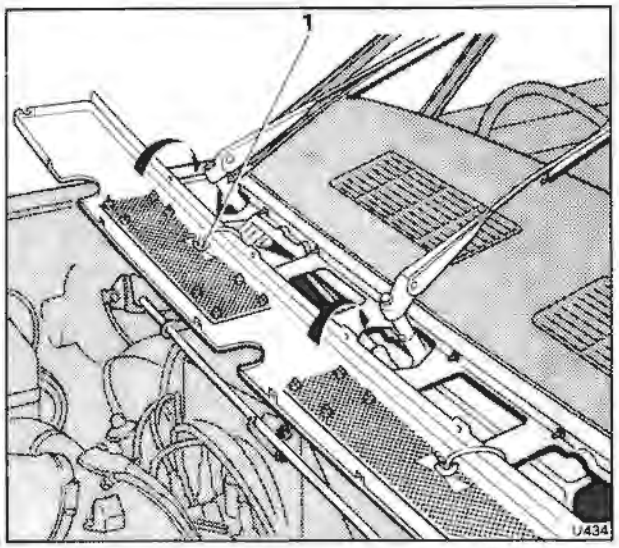

Fig. S122 Removing an air intake grille panel (Camargue)
1 Washer jet nut

Using a wooden block to press against, carefully lever the lower edge of each strip until they are free of the channel flange.

Water channel moulding strips — To fit
Camargue
To fit the water channel moulding strips reverse the procedure given for removal noting the following points.
1. Remove any old sealant from the moulding strips and water channel flanges.
2. Apply a thin film of Glasticon Sealer to the channel flange joint face.
3. When fitting the moulding strips to the channel flange, leave a gap of approximately 3 mm. (0.125 in.) between the front and rear mouldings.
4. Locate the strips over the upper lip of the channel flange. Progressively fit the mouldings by pressing the lower edge of each moulding over the lower lip of the channel flange until it 'snaps' into position.

If necessary, a rubber mallet can be used to assist in this operation but care must be taken to avoid damaging the moulding strips.

Body waist moulding strips — To remove (see Fig. S123)
Silver Shadow II, Bentley T2 and Silver Wraith II
1. Remove the headlamp and headlamp fairing (see Chapter M, Section M8).
2. Remove the nut, plain washer and rubber sealing washer securing the front end of the moulding strip to the wing.
3. Lift one end of the moulding strip, then carefully remove it from the body by progressively lifting the moulding off the seven plastic retaining clips.
4. Remove the side trim panel in the luggage compartment (see Section S12).
5. Remove the nut, plain washer and rubber sealing washer securing the rear end of the moulding strip to the tonneau.
6. Repeat Operation 3.

Body waist moulding strips — To fit (see Fig. S123)
Silver Shadow II, Bentley T2 and Silver Wraith II
To fit a waist moulding strip reverse the procedure given for removal noting the following points.
1. Prior to fitting the moulding, check the condition of the seven plastic retainers in the wing and tonneau. If necessary renew them.
2. **When fitting the headlamps, the headlamp beams should be checked and reset if necessary using a Lucas Beam Tester Mk III in accordance with the manufacturers instructions.**

Body waist moulding strips — To remove
Camargue
1. Remove the side trim panel in the luggage compartment (see Section S12).
2. Remove the 3BA drive nut and washer securing the rear end of the strip to the body panel; access to the nut is through the aperture in the luggage compartment side above the rear wheelarch.

On cars from car serial number 50 085, to gain access to the 3BA drive nut and washer, remove the

relay positioned on the right-hand side of the luggage compartment above the rear wheelarch.
3. Remove the screw securing the front end of the strip inside the door aperture.
4. Lift one end of the moulding strip, then carefully remove it from the body by progressively lifting the moulding off the six plastic retaining clips.

Body waist moulding strips — To fit
Camargue
To fit a waist moulding strip reverse the procedure given for removal noting the following point.
1. Prior to fitting the moulding, check the condition of the six plastic retainers in the body panel. If necessary renew them.

Door waist moulding strips — To remove
Silver Shadow II, Bentley T2 and Silver Wraith II
1. Carefully lift the end of the moulding strip, then progress along the length of the strip removing it from the five retaining clips.
2. To remove the door handle and moulding refer to Section S1.

Door waist moulding strips — To fit
Silver Shadow II, Bentley T2 and Silver Wraith II
To fit a door waist moulding strip reverse the procedure given for removal noting the following points.
1. Prior to fitting the moulding, check the condition of the plastic retainers in the door panel. If necessary renew them.
2. Fit the moulding over the spring, adjacent to the handle, ensuring that the moulding abuts the door handle moulding.

Door waist moulding strips — To remove
Camargue cars prior to car serial number 31961
1. Remove the door trim panels (see Section S1).
2. Remove the 3BA self-locking nut securing the front end of the strip to the door; access to this nut is through the forward aperture in the door inner panel.
3. Remove the 3BA domed nut and washer securing the rear end of the strip to the rear flange of the door.
4. Lift one end of the moulding strip, then carefully remove it from the door by progressively lifting the moulding off the seven plastic retaining clips.

Door waist moulding strips — To fit
Camargue cars prior to car serial number 31961
To fit the door waist moulding strips reverse the procedure given for removal noting the following points.
1. Prior to fitting the moulding, check the condition of the plastic retainers in the door panel. If necessary renew them.
2. When fitting the strip to the door, locate the stud at each end of the strip before pressing it into position in the seven retaining clips.

Door waist moulding strips — To remove
Camargue cars from car serial number 31961
1. Remove the 3BA domed nut and washer securing the rear end of the strip to the rear flange of the door.

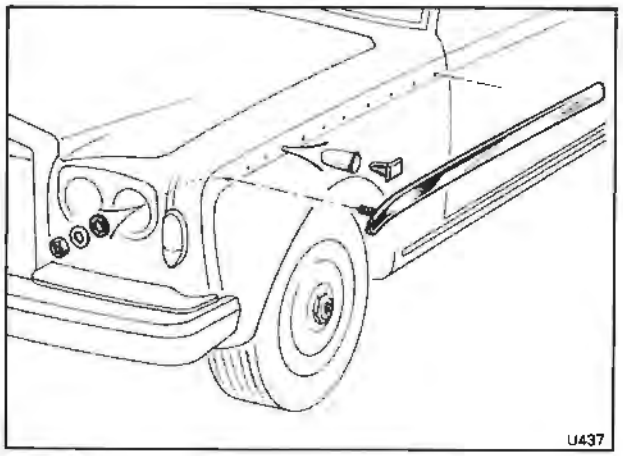

Fig. S123 Body waist moulding strips (Silver Shadow II, Bentley T2 and Silver Wraith II)

2. Lift the rear end of the moulding strip, then carefully remove it from the door by progressively lifting the nylon retaining clips.
Upon removing the last clip, remove the moulding strip by sliding it forwards over the spring retaining clip.

Door waist moulding strips — To fit
Camargue cars from car serial number 31961
To fit the door waist moulding strips reverse the procedure given for removal noting the following points.
1. Prior to fitting the moulding, check the condition of the plastic retainers in the door panel. If necessary renew them.
2. Space out the retaining clips along the length of the moulding. Slide the front end of the strip over the spring clip, locate the bolt retaining the rear end of the moulding then press each retaining clip in turn into position.

Door capping finishers — To remove
Silver Wraith II
1. Drill out the pop rivet securing the front edge of the capping finisher to the door.
2. Pull the front edge of the finisher away from the door until it attains an angle of 45° to the door then, move the finisher rearwards and unclip it from the rear edge of the door.
When carrying out this operation, ensure that the rubber seal is not damaged.
Note
On a small number of cars, the finishers are secured to the door frame with pop rivets. To gain access to the rivets, it will be necessary to remove the door trim and waist rail finisher (see Section S1).

Door capping finishers — To fit
Silver Wraith II
Front doors (see Fig. S124)
1. Clean the door paintwork and the underside of the finisher.
2. If fitting a new finisher, it will be supplied in two pieces; the finisher and the forward edge retainer.

Printed in England
© Rolls-Royce Motors Limited 1980
January 1980
TSD 4200

The finisher should be measured to the individual door, cut to size and then the finisher and forward edge retainer must be argon gas welded, dressed and polished.
3. Apply Hellerine Rubber Lubricant – Grade M Formula 66 or its equivalent to the underside of the rubber sealing strip.
4. Apply Bostik 1261 or its equivalent to the underside of the finisher and the door surfaces beneath the finisher.
5. Hook the rear of the finisher to the rear edge of the door. Slide a blunt instrument under the rubber sealing strip and fit the finisher to the door simultaneously allowing the finisher to fit under the rubber seal.
6. Ensure that the sealing strip is in position and that the finisher is flush with the door then, pot rivet the finisher forward edge retainer to the forward edge of the door.

Rear doors (see Fig. S124)
1. Clean the door paintwork and the underside of the finisher.
2. If fitting a new finisher, it will be supplied in two pieces, the finisher and the rear edge retainer.

The finisher should be measured to the individual door cut to size and then the finisher and rear edge retainer must be argon gas welded, dressed and polished.
3. Repeat Operations 3 to 6 inclusive from the Front door section.

Body sill moulding strips – To remove (see Fig. S125)
Silver Shadow II, Bentley T2 and Silver Wraith II
1. Remove the small access plate from the rear half of the undersheet. Alternatively, remove the rear of the undersheet as appropriate.
2. Front inside the undersheet remove the nut, washer and rubber sealing washer securing the front end of the moulding strip to the front wing.
3. Lift the front end of the moulding strip, then carefully remove it from the sill by progressively lifting the nylon retaining clips.

Upon removing the last clip, remove the moulding strip from the sill by sliding it over the spring retaining clip.
4. To remove the remaining sill fittings inside the door apertures, refer to Section S12.

Body sill moulding strips – To fit (see Fig. S125)
Silver Shadow II, Bentley T2 and Silver Wraith II
To fit the sill moulding strips, reverse the procedure given for removal noting the following points.
1. Prior to fitting the moulding, check the condition of the plastic retainers in the sill. If necessary, renew them.
2. When fitting a new spring retaining clip ensure that the clip, when fitted, is pointing in a forward direction.
3. Space out the retaining clips along the length of the moulding. Slide the rear end of the strip over the spring clip. Align the retaining clips with the retainers in the sill, locate the bolt retaining the front end of the moulding into its access hole, then press each retaining clip in turn into position.

Body sill moulding strips – To remove
Corniche
1. Remove the small access plate from the rear half of the undersheet. Alternatively, remove the rear of the undersheet as appropriate.
2. From inside the undersheet remove the nut, washer and rubber sealing washer securing the front end of the

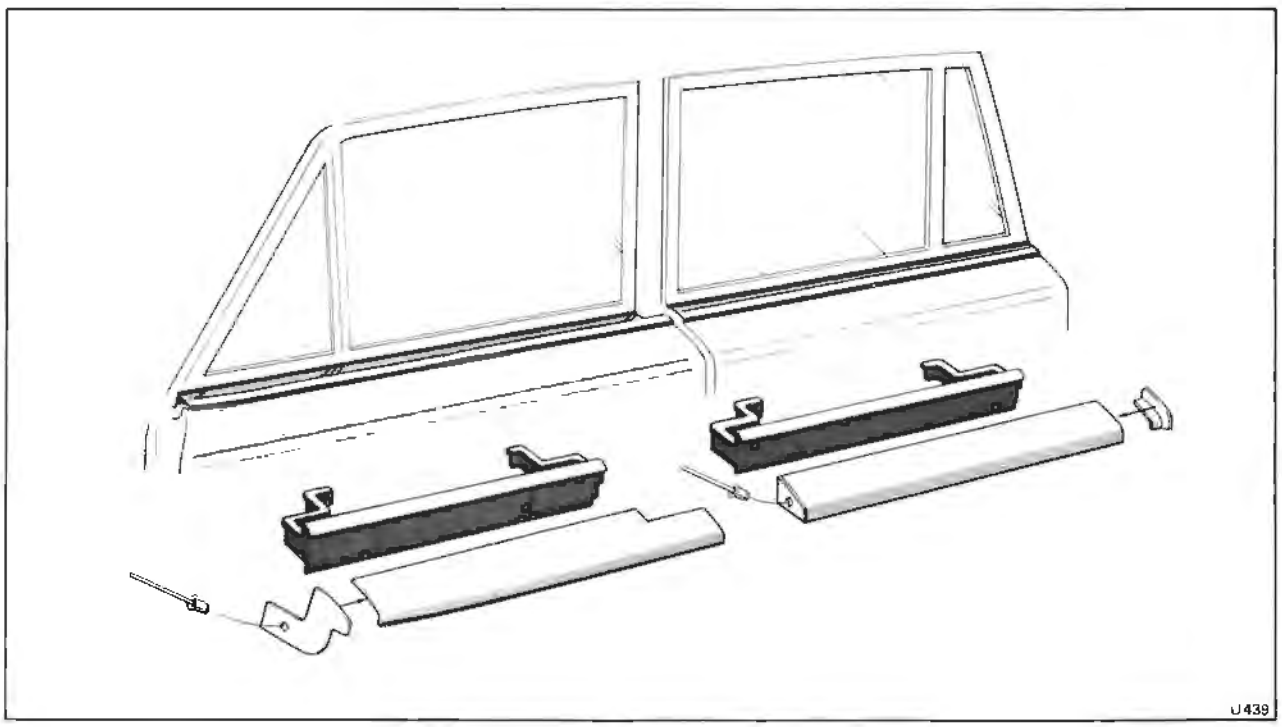

Fig. S124 Door capping finishers (Silver Wraith II)

moulding strip to the front wing.
3. From inside the rear wheelarch, remove the nut, washer and rubber sealing washer securing the rear end of the moulding strip to the rear wing.
4. Remove one of the end retaining bolts, lift the moulding strip and carefully remove it from the sill by progressively lifting the retaining clips and the remaining end retaining bolt.
5. To remove the remaining sill fittings inside the door apertures, refer to Section S12.

Body sill moulding strips — To fit
Corniche
To fit the sill moulding strips, reverse the procedure given for removal noting the following point.
1. Prior to fitting the moulding, check the condition of the plastic retainers in the sill. If necessary, renew them.

Body sill moulding strips — To remove (see Fig. S126)
Camargue
1. Remove the rubber blanking grommet from inside the front wheelarch flange.
2. Remove the nuts and washers securing the front and rear ends of the moulding strip to the body.
3. Remove one of the end retaining bolts, lift the moulding strip and carefully remove it from the sill by progressively lifting the nylon retaining clips and the remaining end retaining bolt.
4. Remove the chromed inner moulding strip along the length of the door aperture by releasing the Posidriv screws.
5. To remove the remaining sill fittings inside the door apertures, refer to Section S12.

Body sill moulding strips — To fit (see Fig. S126)
Camargue
To fit the sill moulding strips, reverse the procedure given for removal noting the following point.
1. Prior to fitting the moulding, check the condition of the plastic retainers in the sill. If necessary, renew them.

Spare wheel carrier — To remove (see Fig. S127)
1. Remove the large rubber plug from the luggage compartment floor.
2. If the car is fitted with a spare wheel retainer, disconnect the toggle end of the retainer from the spare wheel.
3. Operate the lowering mechanism and fully lower the carrier.
4. Remove the spare wheel.
5. Scribe the outline of the large washer on the carrier rear pivot assembly, onto the lowering bolt tube bracket.
6. Remove the rear pivot bolt, nut and large washer then, lower the rear end of the carrier.
7. Remove the ½in. A/F pivot bolt, nut and washers securing the carriers at each of the two forward pivot points; remove the spare wheel carrier.

If difficulty is experienced when attempting to remove the outer pivot bolt, due to its close proximity to the body, slacken the bolts securing the outer mounting bracket to the body.

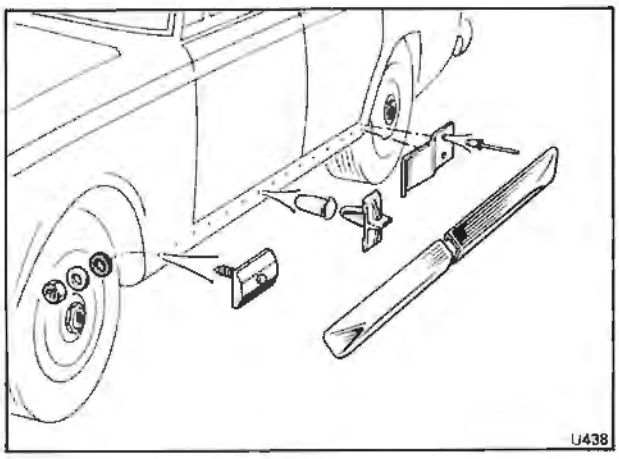

Fig. S125 Body sill moulding strips (Silver Shadow II, Bentley T2 and Silver Wraith II)

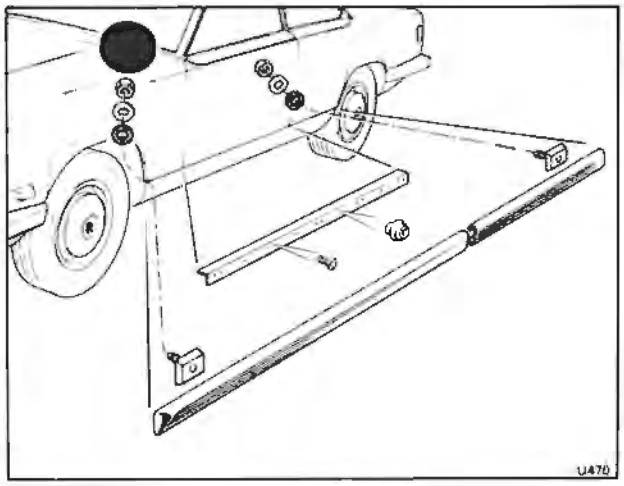

Fig. S126 Body sill moulding strips (Camargue)

8. To remove the lowering bolt and tube assembly proceed as follows.

From beneath the car, slacken the ½in. A/F locknut on the lower end of the bolt then remove the locknut, full nut and plain washer.

Unscrew the lowering bolt from the tube assembly, noting that the bolt is removed from inside the luggage compartment while the tube assembly is removed from beneath the car.

Spare wheel carrier — To fit (see Fig. S127)
To fit the spare wheel carrier reverse the procedure given for removal noting the following points.
1. During assembly, lubricate the lowering bolt and the three pivot bolts with Rocol MTS 1000 grease or its equivalent.
2. Check the condition of the rubber bushes in the carrier pivot points and fit new bushes if necessary.
3. Ensure that the rubber bushes, distance tubes and washers are fitted correctly at the three pivot points (see Fig. S127, insets).

Printed in England
© Rolls-Royce Motors Limited 1980

4. Do not tighten the two front pivot bolts until the rear pivot bolt is fitted, then tighten all three bolts.

When tightening the rear pivot bolt, ensure that the correlation marks made during removal are correctly aligned.

5. After fitting the spare wheel to the carrier, tighten the lowering bolt and check that the spare wheel is held firmly in position. If any slackness is present, adjust as follows (see Fig. S128).

Slacken the carrier by turning the lowering bolt four or five complete turns. Slacken the carrier rear pivot bolt and nut, then move the bolt and carrier upward in the adjustment slot of the lowering tube bracket. Tighten the rear pivot bolt and nut in the new, raised position. Tighten the lowering bolt and check that the spare wheel is now held securely.

Jacking door — To remove

Silver Shadow II, Bentley T2, Silver Wraith II and Corniche

1. Open the door.
2. Release the two Pozidriv screws and washers retaining the door to the sill; remove the door.

Jacking door — To fit

Silver Shadow II, Bentley T2, Silver Wraith II and Corniche

To fit the jacking door reverse the procedure given for removal noting the following points.

1. Ensure that the door is satisfactorily aligned within the aperture by adjusting the retaining screws in their elongated holes.
2. If necessary, replace the door seal as follows.

Remove the seal. Clean any old adhesive from the door with Bostik Cleaner 6001; allow approximately one hour to dry.

Apply Bostik Adhesive 1261 to the bonding surfaces of the door and new seal; allow the adhesive to become 'tacky' before bringing the surfaces firmly together.

3. If necessary, replace the plastic clip retaining the door in the closed position as follows.

Using a 0.125 in. diameter drill, remove the two pop rivets securing the retaining clip to the sill.

Align the new retaining clip with the holes then fix and close the pop rivets.

Fuel filler door — To remove

Cars fitted with the fuel tank beneath the luggage compartment floor

Silver Shadow II, Bentley T2, Silver Wraith II and Corniche (see Fig. S129, Section A)

1. Open the door.

Using a pen or pencil, mark around the base of the

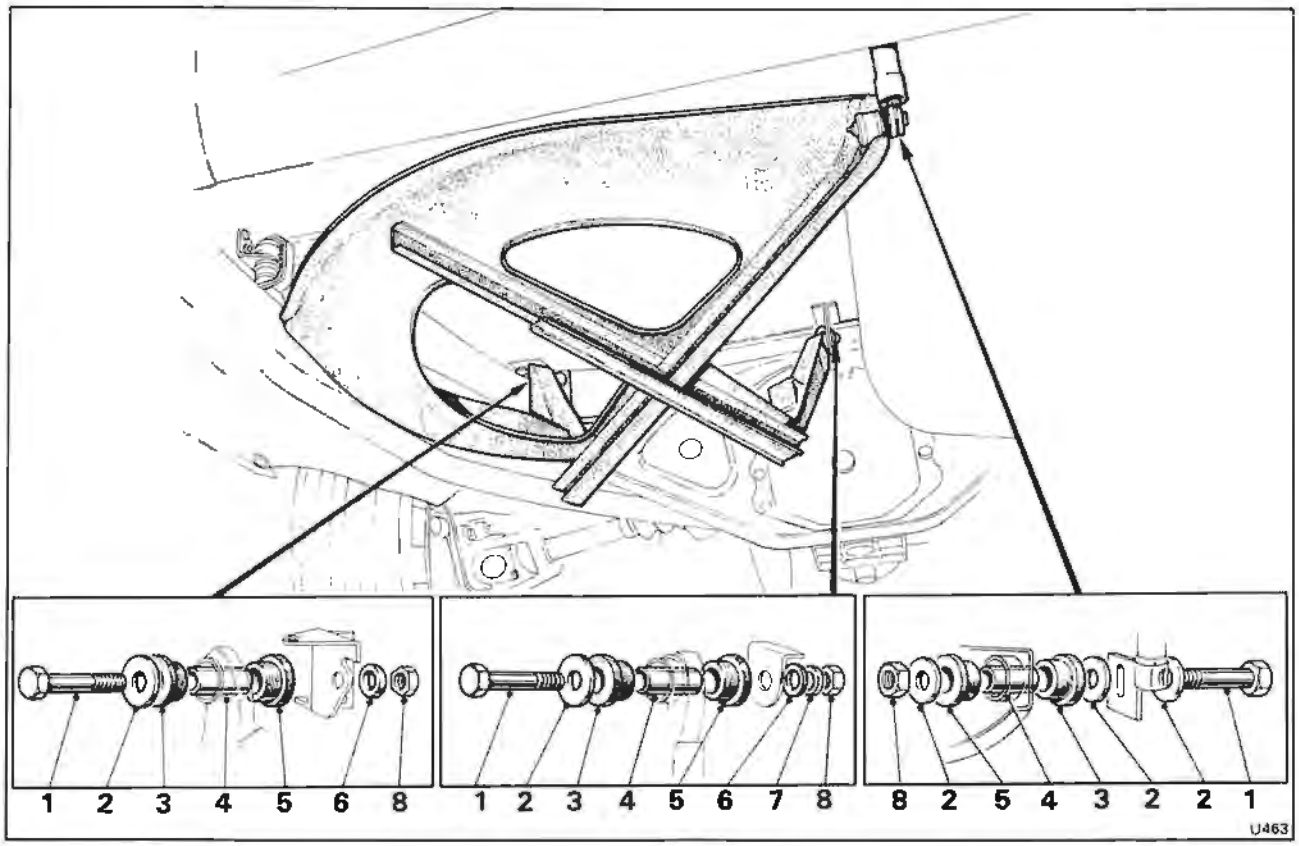

Fig. S127 Spare wheel carrier

1 Bolt
2 Large diameter washer
3 Rubber bush
4 Distance tube
5 Rubber bush
6 Spacing washer
7 Plain washer
8 Nut

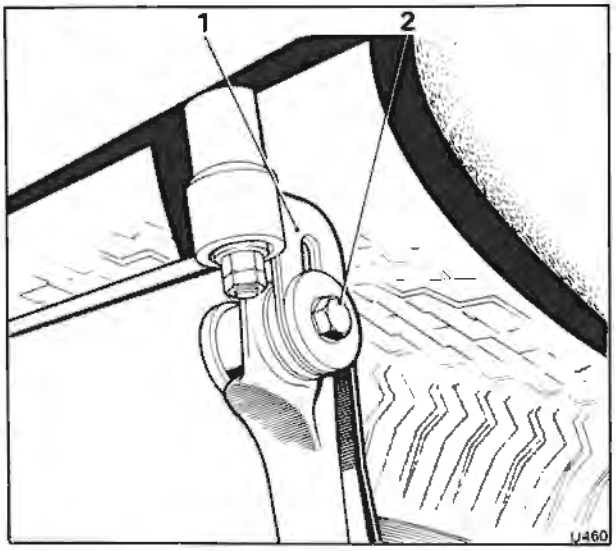

Fig. S128 Spare wheel carrier adjustment point
1 Adjustment slot in tube lowering bracket
2 Bolt

brackets securing the filler door inside the door aperture (see Fig. S129, Section A).
2. Release the retaining spring from the door.
3. Remove the setscrews and washers and also the bump stop assembly retaining the door mounting brackets inside the filler aperture; remove the door.

Camargue (see Fig. S129, Section B)
1. Open the door.
Using a pen or pencil, mark around the hinged brackets on the filler door (see Fig. S129, Section B).
2. Release the retaining spring from the door.
3. Release the six screws and washers securing the brackets to the door; remove the door.
4. If required, remove the hinged brackets by tapping the roll pins and washers until released.

Fuel filler door — To fit
Cars fitted with the fuel tank beneath the luggage compartment floor
Fot fit the fuel filler door reverse the procedure given for removal noting the following points.
1. Ensure that the door opens and closes satisfactorily.
2. Ensure that the door aligns perfectly with the body and that an even gap exists between the door and the edge of the aperture.

Fuel filler door — To remove (see Fig. S130, Section A)
Cars fitted with the fuel tank behind the rear seat
Silver Shadow II, Bentley T2 and Silver Wraith II
1. Open the door.
Using a pen or pencil, mark around the base of the brackets securing the filler door inside the door aperture (see Fig. S130, Section A).
2. Release the retaining spring from the rear of the fuel filler box.
3. On cars destined for Canada, Japan and the U.S.A. an unleaded fuel requirement plate is fitted behind the

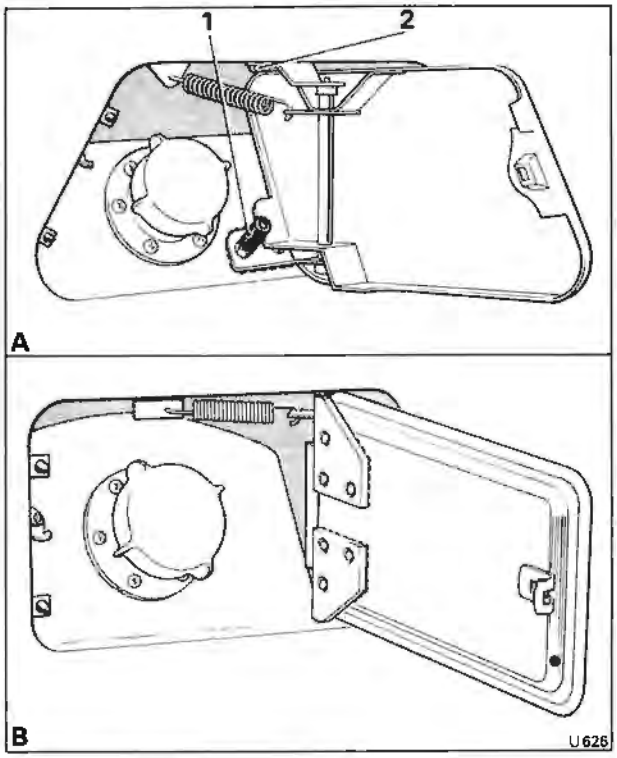

Fig. S129 Fuel filler door — Cars fitted with the fuel tank beneath the luggage compartment floor
A Silver Shadow II, Bentley T2, Silver Wraith II and Corniche
1 Bump stop assembly
2 Mounting bracket setscrews
B Camargue

fuel filler door. Release the retaining spring situated between the plate and the rear of the filler box by unhooking the spring at the rear end.
4. Remove the setscrews and washers retaining the door mounting brackets inside the aperture; remove the door together with the retaining springs.

Corniche (see Fig. S130, Section B)
1. Open the door.
Using a pen or pencil, mark around the base of the bracket securing the filler door inside the door aperture (see Fig. S130, Section B).
2. Unhook the coiled spring from the small bracket mounted on the door.
3. Remove the setscrews and washers retaining the door mounting bracket inside the aperture; remove the door.
On cars destined for Canada, Japan and the U.S.A. an unleaded fuel requirement plate is fitted behind the fuel filler door, this will be removed with the door.

Camargue (see Fig. S130, Section C)
1. Open the door.
Using a pen or pencil, mark around the base of the brackets securing the filler door inside the door aperture (see Fig. S130, Section C).

Printed in England
© Rolls-Royce Motors Limited 1980

2. Unhook the large coiled spring from the mounting bracket.
3. On cars destined for Canada, Japan and the U.S.A. an unleaded fuel requirement plate is fitted behind the fuel filler door. Release the setscrew and washer securing the retaining spring mounting bracket to the rear of the filler box.
4. Remove the setscrews and washers retaining the door mounting brackets inside the aperture; remove the door together with the retaining springs.

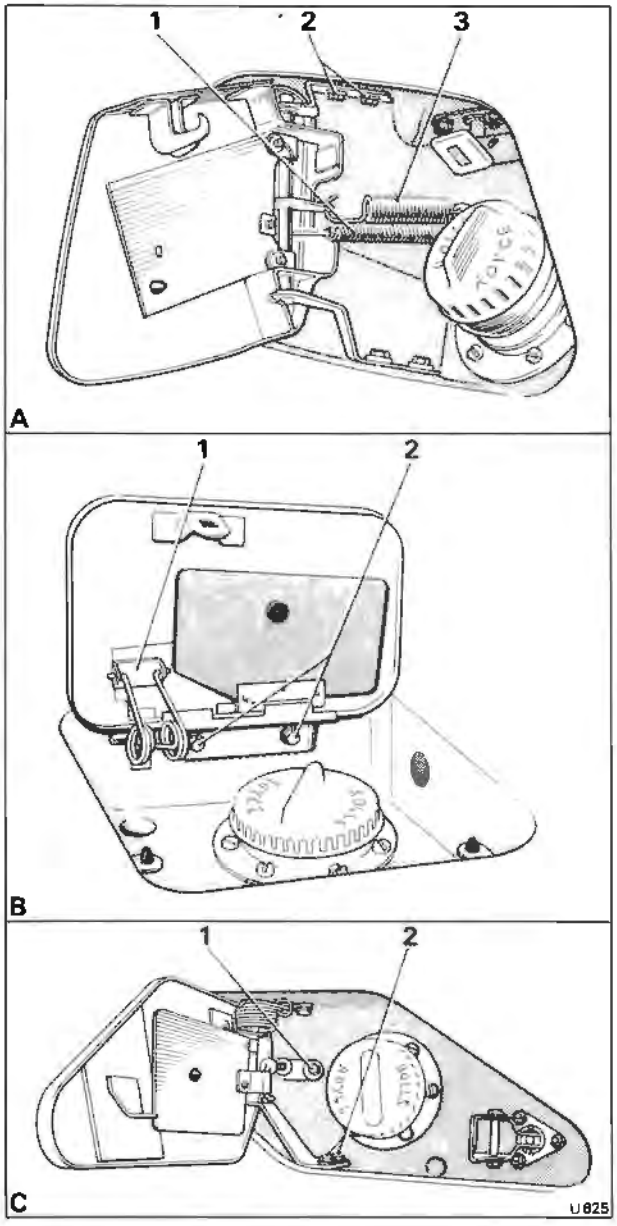

Fig. S130 Fuel filler door — Cars fitted with the fuel tank behind the rear seat

A Silver Shadow II, Bentley T2 and Silver Wraith II
1 Fuel requirement plate retaining spring
2 Mounting bracket setscrews
3 Door retaining spring
B Corniche
1 Spring retaining bracket
2 Mounting bracket setscrews
C Camargue
1 Fuel requirement plate retaining spring setscrew and washer
2 Mounting bracket setscrews

Fuel filler door — To fit (see Fig. S130)
Cars fitted with the fuel tank behind the rear seat
To fit the fuel filler door reverse the procedure given for removal noting the following points.
1. Ensure that the door opens and closes satisfactorily.
2. Ensure that the door aligns perfectly with the body and that an even gap exists between the door and the edge of the aperture.

Section S8

Windscreen and Rear window Contents

	Page
Windscreen — To remove and fit (Silver Shadow II, Bentley T2 and Silver Wraith II)	S8 - 1
Windscreen — To remove and fit (Corniche Saloon)	S8 - 6
Windscreen — To remove and fit (Corniche Convertible)	S8 - 7
Windscreen — To remove and fit (Camargue)	S8 - 8
Rear window — To remove and fit (Silver Shadow II and Bentley T2)	S8 - 14
Rear window — To remove and fit (Silver Wraith II)	S8 - 15
Rear window — To remove and fit (Corniche Saloon)	S8 - 16
Rear window — To remove and fit (Corniche Convertible)	S8 - 17
Rear window — To remove and fit (Camargue)	S8 - 18

Printed in England
© Rolls-Royce Motors Limited 1981

March 1981
TSD 4200

Section S8

Windscreen and Rear window

Printed in England

© Rolls-Royce Motors Limited 1981

Windscreen — To remove
Silver Shadow II, Bentley T2 and Silver Wraith II

1. Disconnect the battery.
2. Protect the paintwork in the vicinity of the windscreen with clean thick felt.
3. Remove the windscreen wiper arms and blades.
4. Pull each sun visor spindle from the slots in the inner retaining brackets then swing each visor outwards to lie against the cantrail/roof trim panels (see Fig. S131).
5. Remove the sun visor inner retaining brackets by releasing the screws securing the brackets to the header trim panel (see Fig. S131).
6. Release the setscrew securing the mirror head to the stem; remove the mirror head.
7. Remove the screw and cup washer securing the header trim panel at each side of the mirror stem (see Fig. S131).
8. Release the retaining clips and disengage the brackets from each end of the header trim panel by sliding the panel upwards (see Fig. S131); remove the header trim panel.
9. Release the two screws and cup washers retaining the 'A' post trim panels at each side of the windscreen. Also, remove the self-tapping screw securing the top of each 'A' post to the header panel; remove the 'A' post trim panels (see Fig. S131).
10. Remove the facia panels, top roll, demister panel and the windscreen finisher panel (see Section S12).
11. On cars conforming to a U.S.A. or Canadian specification remove the two retaining nuts and reinforcement plates from above the windscreen (see Fig. S132).

From the outside of the screen, remove the chromed windscreen retention plates by releasing the large nuts and washers from the windscreen wiper spindles.

12. From inside the car, ease the lip of the rubber seal over the windscreen aperture flange using a small steel rule or similar tool. Start at the top corners and work towards the centre, simultaneously applying pressure to the screen. An assistant will be required to support the windscreen as it is pushed out of the aperture.

Do not force the windscreen from the aperture by applying sharp blows as this may cause damage to the body, paintwork or glass. A steady pressure is all that is required.

If a new windscreen seal is to be fitted, carefully cut through the old seal to remove the windscreen.

Windscreen — To fit
Silver Shadow II, Bentley T2 and Silver Wraith II

1. Remove all dirt, grit, etc. from the windscreen aperture flanges. Remove any grease with Genklene.
2. Examine the existing rubber seal for any sign of damage i.e. the rubber is perished or cut. If any extensive damage is found, always fit a new seal.

Always ensure that the seal is thoroughly cleaned, especially in the glass channel area with Bostik Cleaner 6001.

3. Provide a sound working base for the windscreen to

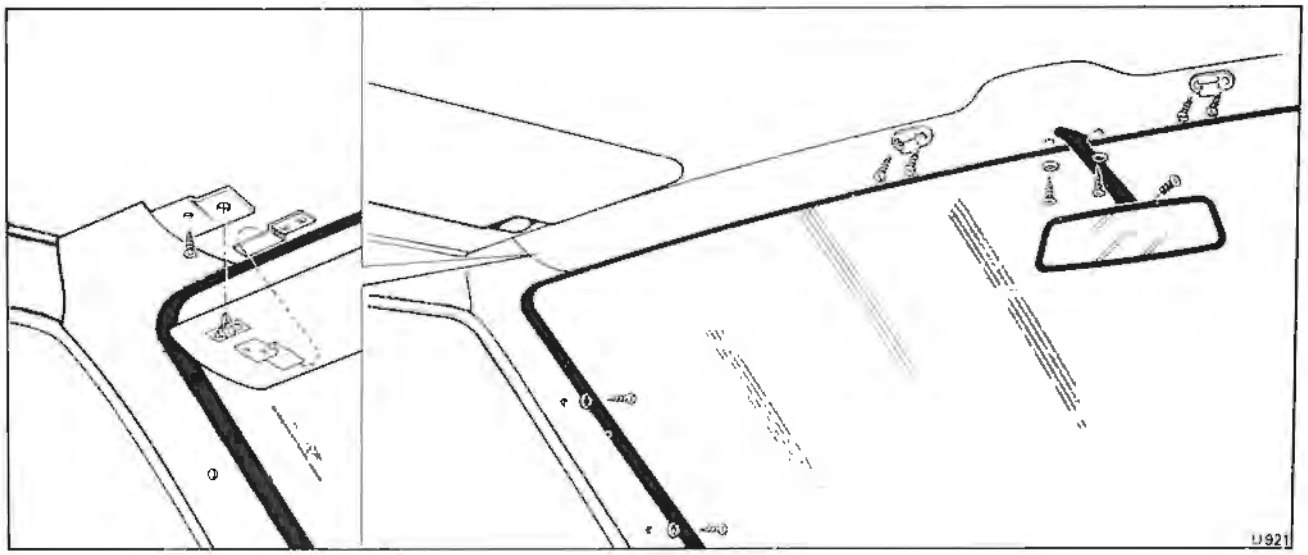

Fig. S131 Windscreen interior trim (Silver Shadow II, Bentley T2 and Silver Wraith II)

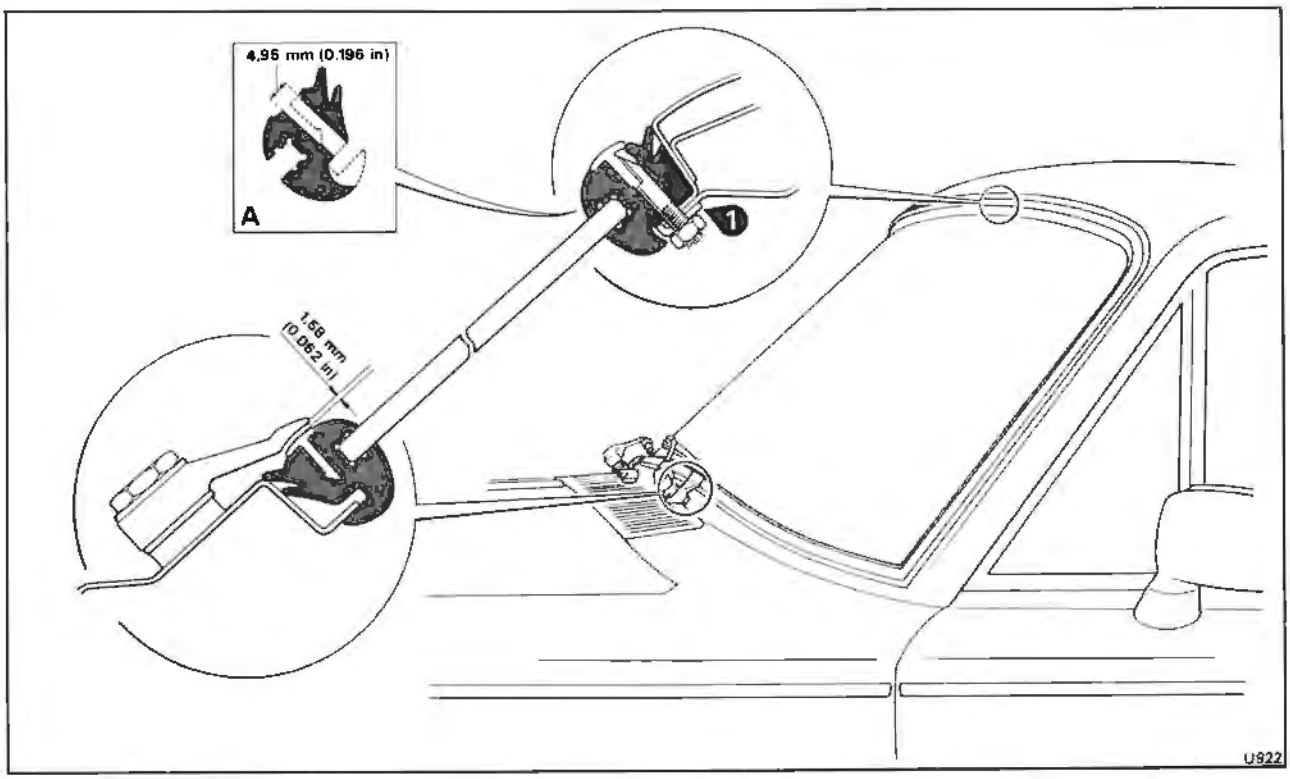

Fig. S132 Windscreen retention (Silver Shadow II, Bentley T2 and Silver Wraith II)
Cars destined for U.S.A. and Canada

A Drilling and cutting a new seal

1 Reinforcement plate

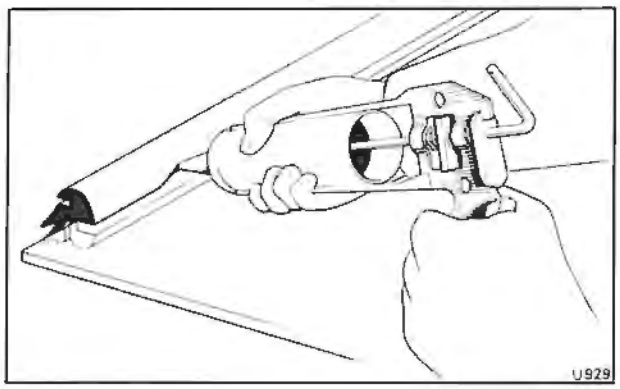

Fig. S133 Applying sealant inside the glass channel aperture within the rubber seal

lie on while the seal is fitted i.e. a large block of wood suitably formed with a covering of felt.

Position the windscreen on the block with its external surface uppermost.

4. Examine the existing chrome finisher; if it is extensively damaged it should be renewed.

5. Fit the rubber seal around the windscreen.

Using a sealant cartridge gun, run a continuous bead of Arbomast Autograde Sealant or Seelastik around the inside of the glass channel aperture within the moulded rubber seal (see Fig. S133). Remove any excess sealant from all surfaces with Bostik Cleaner 6001.

6. Fit the chrome finisher into the seal as follows.

Position the finisher centrally then press it into its aperture starting in the centre at the top and bottom of the screen and working outwards. Using a small steel rule or similar tool, work the lip of the seal around the finisher.

On cars conforming to a U.S.A. or Canadian specification ensure that the finisher is slightly more concave than the windscreen aperture then press the retaining studs through the holes in the seal before pressing the finisher into position.

If a new seal is being fitted, mark and drill two 4,95 mm. (0.196 in.) diameter holes through the seal to accept the windscreen retention studs then mark and cut the rear of the seal to clear the stud reinforcement plates (see Fig. S132, inset A).

7. Turn the windscreen over so that the inner face is uppermost then, using a tool similar to the one shown in Figure S134, inset A, thread a length of thin cord around the inside edge of the rubber seal; leave a loop in the cord at the bottom of the windscreen and overlap the two free ends of the cord at the top of the screen (see Fig. S134). Temporarily secure the loose ends of the cord to the inside of the screen with masking tape.

8. Using a sealant cartridge gun, run a continuous bead of Arbomast Autograde Sealant or Seelastik approximately 6 mm. (0.250 in.) wide and 3 mm. (0.125 in.) high around the windscreen aperture, 12,7 mm. (0.50 in.) from the body flange. Also, apply a bead of sealant 20 cm. (8.0 in.) long around each

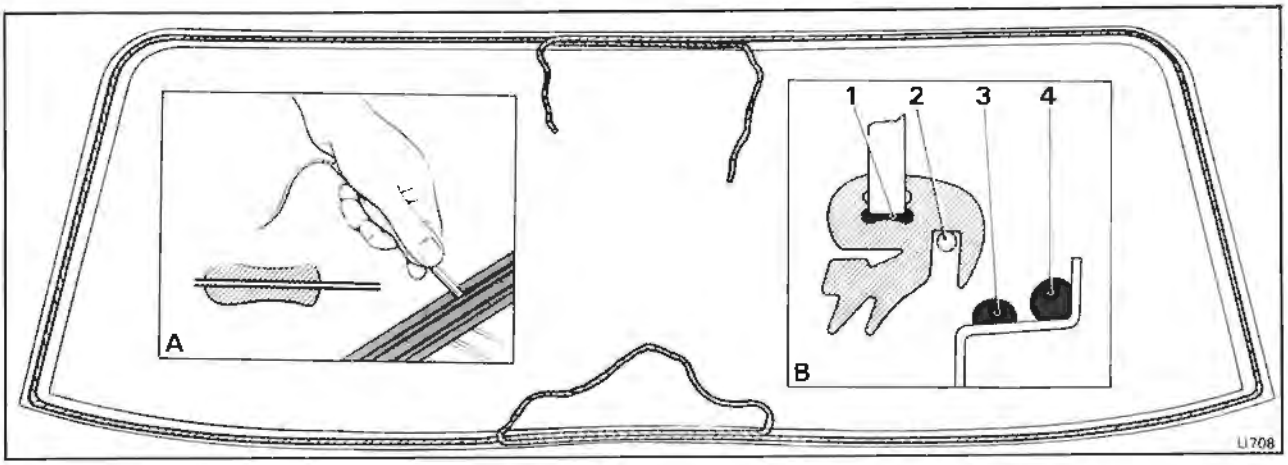

Fig. S134 Fitting the cord around the rubber seal and positioning the sealant inside the seal and windscreen aperture

A Tool for threading cord
B Position of cord and sealant
1 Sealant inside the glass channel aperture
2 Cord
3 Position of sealant around the windscreen aperture
4 Position of sealant around the bottom corners of the windscreen aperture

bottom corner of the windscreen aperture (see Fig. S134, inset B).

On cars conforming to a U.S.A. or Canadian specification apply extra sealant across the slots in the top of the aperture flange approximately 5,0 cm. (2.0 in.) to either side.

9. Position and centralize the windscreen/seal assembly into the aperture with the bottom edge entered and seated on the bottom ledge of the aperture.
10. Using a rubber mallet apply several sharp blows around the seal/finisher starting in the centre of the top edge; the windscreen should then be seated inside the aperture.
11. Remove the masking tape retaining the cord to the windscreen.
12. With the help of an assistant pressing on the outside of the windscreen and following the direction of the cord as it is removed, carefully pull the looped cord at the bottom of the windscreen so that the lip of the seal is drawn over the aperture flange. Pull the cord steadily and evenly, alternatively to the right and left, along the bottom of the aperture and half-way up each 'A' post.

In a similar manner, carefully pull each end of the cord along the top of the windscreen (see Fig. S135) until the cord is completely removed.

Ensure that the lip of the seal is fitting over the flange at all points around the aperture. If any part of the seal is curled under the flange, it should be corrected with the skilful use of a small steel rule or a similar tool.

13. Ensure that the seal is seating flush with the body. If required, apply further pressure with the rubber mallet.

If the seal will not remain flush, the windscreen should be removed and the fault determined, e.g. the aperture flange may have a high spot, in which case an experienced panel beater will be required to rectify the fault.

Operations 14 to 18 inclusive are applicable to cars conforming to a U.S.A. or Canadian specification.

14. Remove any excess sealant from the two retaining studs.

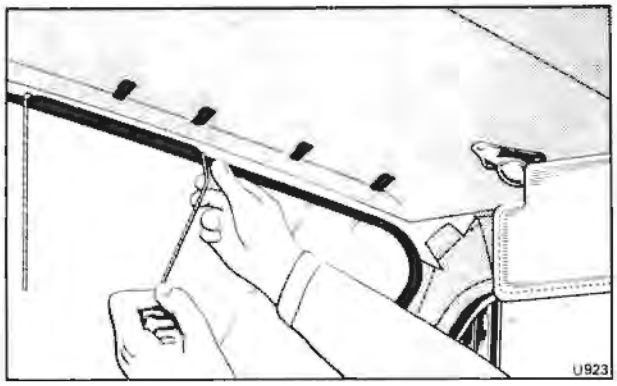

Fig. S135 Pulling the lip of the seal over the aperture flange

15. Fit a reinforcement plate over each stud with its flange seated on the edge of the windscreen aperture (see Fig. S132, item 1).
16. Apply Loctite 242 onto each stud.
17. Fit and tighten a nut onto each stud so that the nut just touches the reinforcement plate. **Do not** tighten the nut further as distortion of the chrome finisher would occur.
18. From the outside of the windscreen, fit the chromed windscreen retention plates onto the wiper spindles using two washers to each spindle. The washers should be positioned to ensure that the gap between both plates and the windscreen finisher is the same and is clear of the finisher with a maximum permitted gap of 1,58 mm. (0.062 in.); refer to Figure S132.
19. Remove any excess sealant from the inside and outside of the windscreen with Bostik Cleaner 6001.
20. Test the windscreen for water leaks by applying water under pressure to the outside of the screen.

If the sealing is satisfactory, fit the interior trim around the windscreen by reversing the removal procedure.

Printed in England
© Rolls-Royce Motors Limited 1981

Windscreen — To remove
Corniche Saloon
1. Disconnect the battery.
2. Protect the paintwork in the vicinity of the windscreen with clean thick felt.
3. Remove the windscreen wiper arms and blades.
4. Carefully peel back the top forward corners of the door aperture seals to gain access to the screw retaining the top of each trim cover to the 'A' posts; remove the screws (see Fig. S136).
Slide the trim covers upwards and remove.
5. Release the setscrew securing the mirror head to the stem; remove the mirror head.

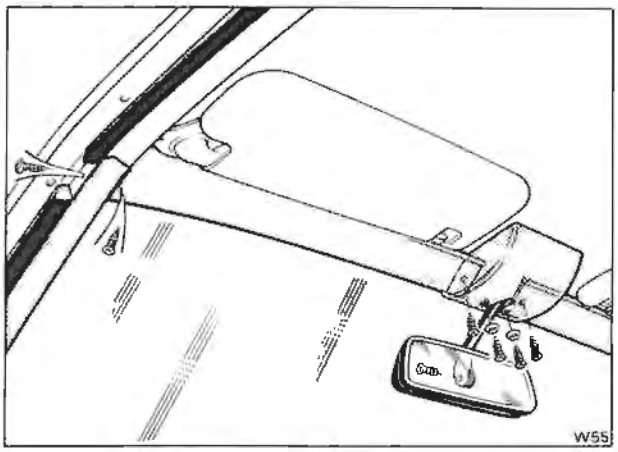

Fig. S136 Windscreen interior trim (Corniche Saloon)

6. Remove the two screws and cup washers securing the mirror stem and mounting assembly trimmed cover to the header panel; release the spring clip and remove the cover (see Fig. S136).
7. Remove the self-tapping screws retaining the outer corners of the header trim panels then release the spring clips and remove the panels (see Fig. S136).
8. Remove the facia panels, top roll, demister panel, etc. (see Section S12).
9. On cars conforming to a U.S.A. and Canadian specification remove the two screws retaining the top of the windscreen to the header panel. Also, remove the two bolts and washers retaining the bottom of the windscreen (see Fig. S137).
10. From inside the car, ease the lip of the rubber seal over the windscreen aperture flange using a small steel rule or similar tool. Start at the top corners and work towards the centre, simultaneously applying pressure to the screen. An assistant will be required to support the windscreen as it is pushed out of the aperture.
Do not force the windscreen from the aperture by applying sharp blows as this may cause damage to the body, paintwork or glass. A steady pressure is all that is required.

Windscreen — To fit
Corniche Saloon
1. Remove all traces of dirt, sealing compound, etc., from the windscreen aperture flanges. Remove any grease with Genklene.
2. Examine the existing rubber seal for any sign of damage i.e. the rubber is perished or cut. If any

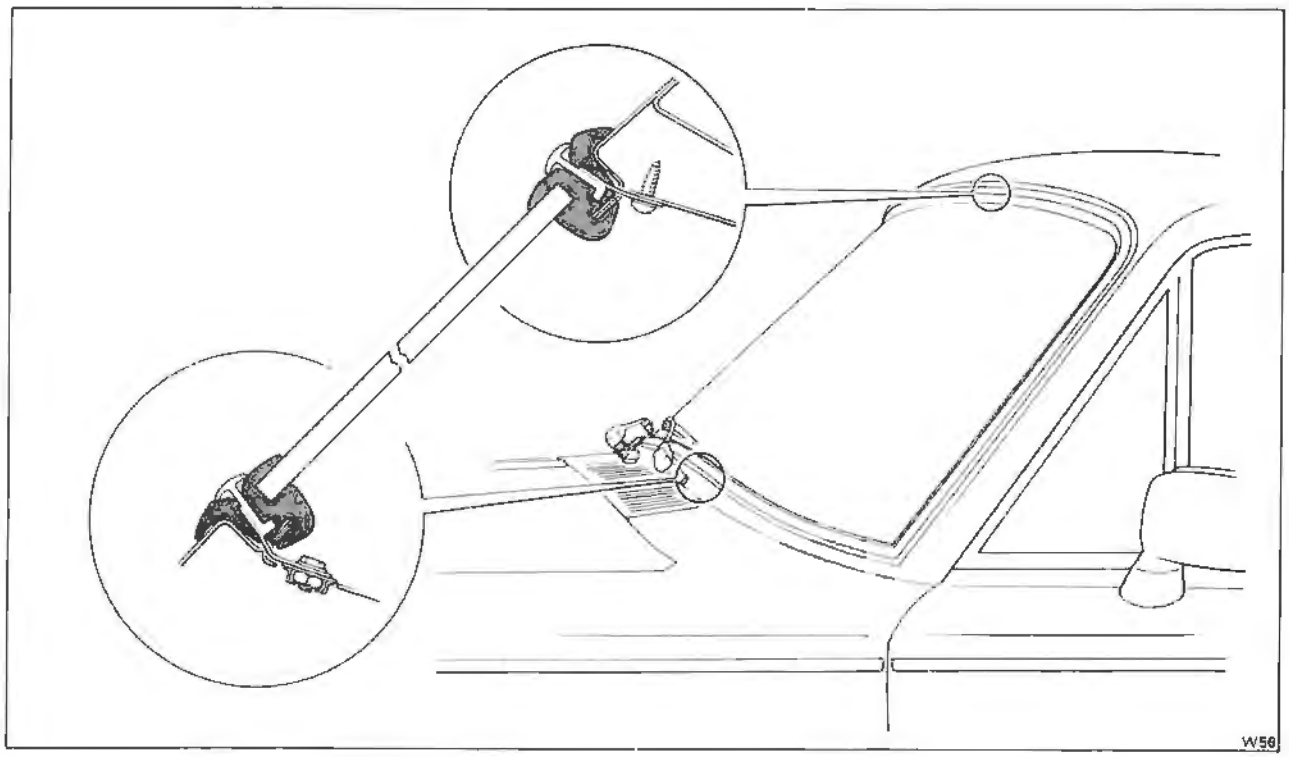

Fig. S137 Windscreen retention (Corniche) — Cars destined for U.S.A. and Canada

extensive damage is found, always fit a new seal.

Ensure that the seal is thoroughly cleaned, especially in the glass channel area with Bostik Cleaner 6001.

3. Provide a sound working base for the windscreen to lie on while the seal is fitted i.e. a large block of wood suitably formed with a covering of felt.

Position the windscreen on the block with its external surface uppermost.

4. Examine the existing chrome finishers; if they are extensively damaged, renew them.

5. Fit the rubber seal around the windscreen.

Using a cartridge gun, run a continuous bead of Glasticon Gun Mastic around the inside of the glass channel aperture within the moulded rubber seal (see Fig. S133). Remove any excess mastic from all surfaces with Bostik Cleaner 6001.

6. Fit the chrome finishers into the seal as follows.

Press each finisher into its aperture. Using a small steel rule or similar tool, work the lip of the seal around the finishers. Ensure that a gap of approximately 3,2 mm. to 4,8 mm. (0.125 in. to 0.187 in.) exists between the finishers after fitting (see Fig. S138).

Fit the small chrome covers over the gaps in the finishers.

On cars conforming to a U.S.A. or Canadian specification press the retaining plates through the slots in the seal before pressing the finishers into position.

If a new seal is being fitted, mark and cut slits in the seal to give access to the retention plates.

7. Turn the windscreen over so that the inner face is uppermost then, using a tool similar to the one shown in Figure S134, inset A, thread a length of thin cord around the inside edge of the rubber seal; leave a loop in the cord at the bottom of the windscreen and overlap the two free ends of the cord at the top of the screen (see Fig. S134). Temporarily secure the loose ends of the cord to the screen with masking tape.

8. Using a cartridge gun, run a continuous bead of Glasticon Gun Mastic around the windscreen aperture.

On cars conforming to a U.S.A. or Canadian specification apply extra mastic across the slots in the top and bottom of the aperture flange.

9. Position and centralize the windscreen/seal assembly into the aperture with the bottom edge entered and seated on the bottom ledge of the aperture.

On cars conforming to a U.S.A. or Canadian specification apply extra mastic across the slots in the top and bottom of the aperture flange.

10. Using a rubber mallet and starting in the centre of the top edge, apply several sharp blows around the seal/finisher. The windscreen should then be seated inside the aperture.

11. Remove the masking tape retaining the cord to the windscreen.

12. With the help of an assistant pressing on the outside of the windscreen and following the direction of the cord as it is removed, carefully pull the looped cord at the bottom of the windscreen so that the lip of the seal is drawn over the aperture flange. Pull the cord steadily and evenly, alternatively to the right and left, along the bottom of the aperture and half-way up each 'A' post.

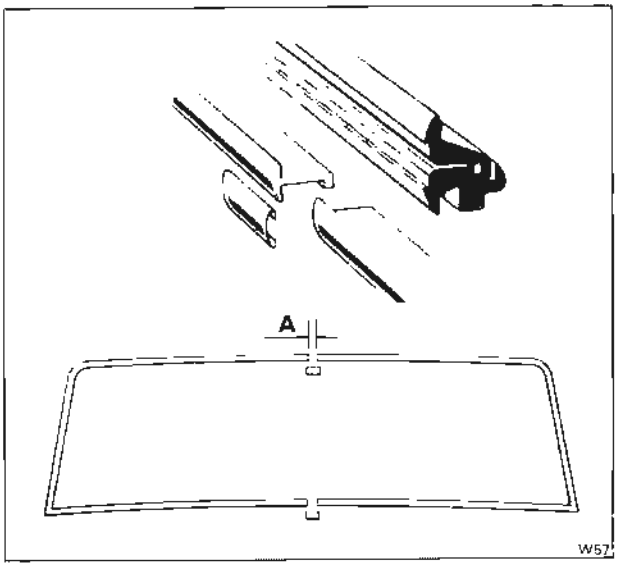

Fig. S138 Fitting the chrome finishers into the seal (Corniche)
A Approximately 3,2 mm. to 4,8 mm. (0.125 in. to 0.187 in.)

In a similar manner, carefully pull each end of the cord along the top of the windscreen (see Fig. S135) until the cord is completely removed.

Ensure that the lip of the seal is fitting over the flange at all points around the aperture. If any part of the seal is curled under the flange, it should be corrected with the skilful use of a small steel rule or a similar tool.

13. Ensure that the seal is seating flush with the body. If required, apply further pressure with the rubber mallet.

If the seal will not remain flush, the windscreen should be removed and the fault determined, e.g. the aperture flange may have a high spot, in which case an experienced panel beater will be required to rectify the fault.

Operations 14 to 16 inclusive are applicable to cars conforming to a U.S.A. or Canadian specification.

14. Remove any excess mastic from the four retention plates.

15. Locate the holes from which the top retention plates have been removed then place a large washer beneath the plate. Using self-tapping screws, secure the plates into position (see Fig. S137).

16. Fit the bolts and washers into the bottom retention plates locating them into the cage nuts (see Fig. S137).

17. Remove any excess mastic from the inside and outside of the windscreen with Bostik Cleaner 6001.

18. Test the windscreen for water leaks by applying water under pressure to the outside of the screen.

If the sealing is satisfactory, fit the interior trim around the windscreen by reversing the removal procedure.

Windscreen — To remove
Corniche Convertible

1. Protect the paintwork in the vicinity of the

Printed in England
© Rolls-Royce Motors Limited 1981
March 1981
TSD 4200

windscreen with clean thick felt.
2. Lower the power operated hood as follows.
Apply the parking brake, move the gear range selector lever to the 'Park' position and switch on the ignition.
Release the two safety catches securing the hood to the top rail of the windscreen then lower the hood by operating the switch situated in the centre console.
Switch off the ignition.
3. Disconnect the battery.
4. Remove the windscreen wiper arms and blades.
5. Release the two screws retaining the top of each 'A' post trim cover to the windscreen top rail (see Fig. S139); slide the trim covers upwards and remove.
6. Release the two Pozidriv screws securing the front section of each hood catch plate (see Fig. S139); remove the plates.
7. Release the three screws securing the rear section of each catch plate (see Fig. S139); remove the plates.
8. Release the setscrew securing the mirror head to the stem; remove the mirror head.
9. Release the four screws and cup washers securing the trimmed cover around the mirror stem and mounting assembly. Also, remove the screw from each end of the top rail trim panel; remove the trim panel and cover.
10. Remove the nut and bolt securing each sun visor inner retaining bracket from the mirror stem and mounting assembly (see Fig. S139); slide the sun visors inwards and remove.
11. Remove the facia panels, top roll, demister panel, etc. (see Section S12).
12. On cars conforming to a U.S.A. or Canadian specification remove the two screws retaining the top of the windscreen to the top rail. Also, remove the two bolts and washers retaining the bottom of the windscreen (see Fig. S137).
13. From inside the car, ease the lip of the rubber seal over the windscreen aperture flange using a small steel rule or similar tool. Start at the top corners and work towards the centre, simultaneously applying pressure to the screen. An assistant will be required to support the windscreen as it is pushed out of the aperture.
Do not force the windscreen from the aperture by applying sharp blows as this may cause damage to the body, paintwork or glass. A steady pressure is all that is required.
If a new windscreen seal is to be fitted, carefully cut through the old seal to remove the windscreen.

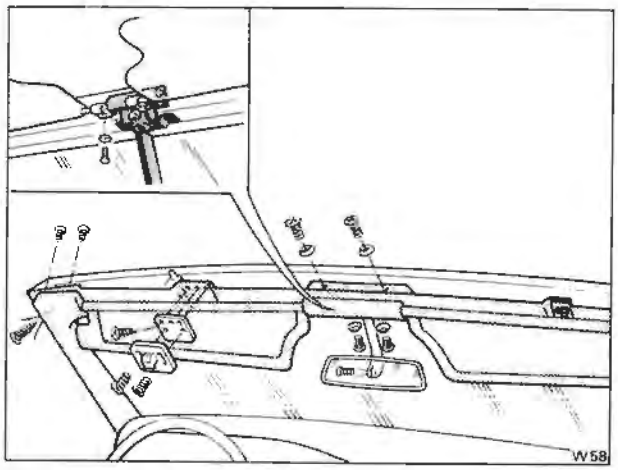

Fig. S139 Windscreen interior trim (Corniche Convertible)

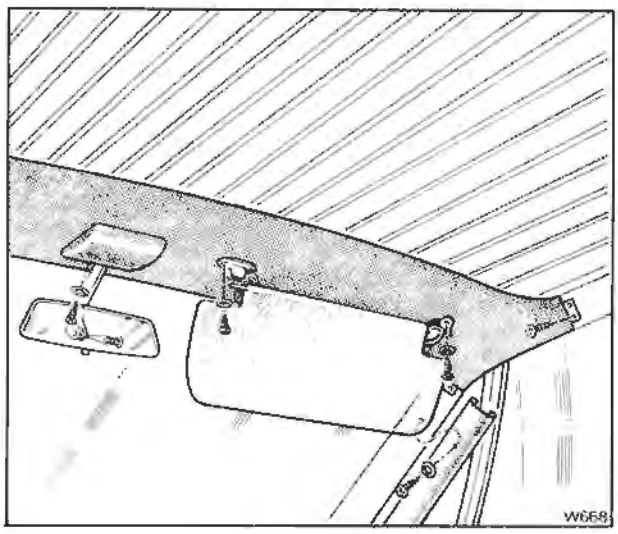

Fig. S140 Windscreen interior trim (Camargue)

Windscreen — To fit
Corniche Convertible
To fit a windscreen, follow the same procedure described in Windscreen — To fit, Corniche Saloon cars.

Windscreen — To remove
Camargue
1. Disconnect the battery.
2. Protect the paintwork in the vicinity of the windscreen with clean thick felt.
3. Remove the windscreen wiper arms and blades.
4. Pull each sun visor spindle from the slots in the inner retaining brackets (see Fig. S140).
5. Remove the three screws securing each sun visor assembly to the header trim panel; remove the sun visors.
6. Remove the inner retaining brackets by releasing the screws and cup washers securing the brackets to the header trim panel (see Fig. S140).
7. Release the setscrew securing the mirror head to the stem; remove the mirror head.
8. Remove the two screws and cup washers securing the trimmed mirror stem cover to the header trim panel; remove the cover.
Note
On early cars, the trimmed cover is retained by a spring clip in addition to the two screws.
9. Release the two screws and cup washers retaining the 'A' post trim panels at each side of the windscreen; remove the panels.
10. Release the eight screws securing the header trim panel above the windscreen; remove the panel.
To gain access to the rear securing screws on each

side of the panel, detach the front ends of the cantrail trim panels by releasing the spring clips.

11. Remove the facia, top roll and the demister grille/windscreen lower finisher panel assembly (see Section S12).

12. On cars prior to serial number 31961, carefully lever the windscreen chrome finisher and seal out of the aperture as follows.

Starting at one corner progressively lift the combined finisher and seal out of the recess until it is removed from the aperture. If the finisher lifts out of the seal during this operation, it will be necessary to first remove the finisher and then the seal.

Take care to avoid damaging the paintwork, windscreen or the chrome finisher when carrying out this operation.

13. On cars from serial number 31961, release the four self-tapping screws retaining the windscreen chrome finisher retention plates to the 'A' posts.

Carefully lever the combined finisher, seal and retention plates from the aperture recess.

Ensure that the paintwork, windscreen or chrome finisher is not damaged when carrying out this operation.

14. On early cars, carefully remove the rubber finishing strip from the upper and side flanges of the windscreen aperture.

15. Before the windscreen can be removed it is necessary to cut through the Betaseal (Operations 16 to 24 inclusive) or Solbit (Operations 25 to 27 or 28 to 31 inclusive) sealing the glass to the aperture. Always wear safety glasses and gloves when carrying out this operation.

Removing a windscreen bonded with Betaseal Adhesive

16. Use a tool similar to the one shown in Figure S141, and strong flexible wire approximately 1100 mm. (43 in.) in length (see Fig. S141, item 1).

17. Bend a small amount of the wire at one end then thread the remainder through the tube of the tool (see Fig. S141, item 2).

18. Secure the end of the wire in the clamping tool (see Fig. S141, item 3).

19. Draw the wire through the guide at the end of the tube (see Fig. S141, item 4).

20. Using a pair of pliers, guide the end of the wire through the Betaseal adhesive to the exterior of the windscreen (see Fig. S141, item 5).

21. Guide the wire through the finger guard tube and clamp into position (see Fig. S141, item 6).

22. With the help of an assistant, commence the cutting out of the windscreen as follows.

The holding tool (item A) is pulled in the cutting direction as far as possible (see Fig. S141, item 7) and the point of the tool is fixed and held in the adhesive as near as possible to the windscreen flange.

23. The pulling tool (item B) outside the windscreen is moved with an even pull in the cutting direction, close to the opening between the windscreen and body aperture (see Fig. S141, item 8).

24. When the end of the cutting length is reached (see Fig. S141, item 9), repeat Operations 22 and 23 around the circumference of the windscreen, until it can be removed.

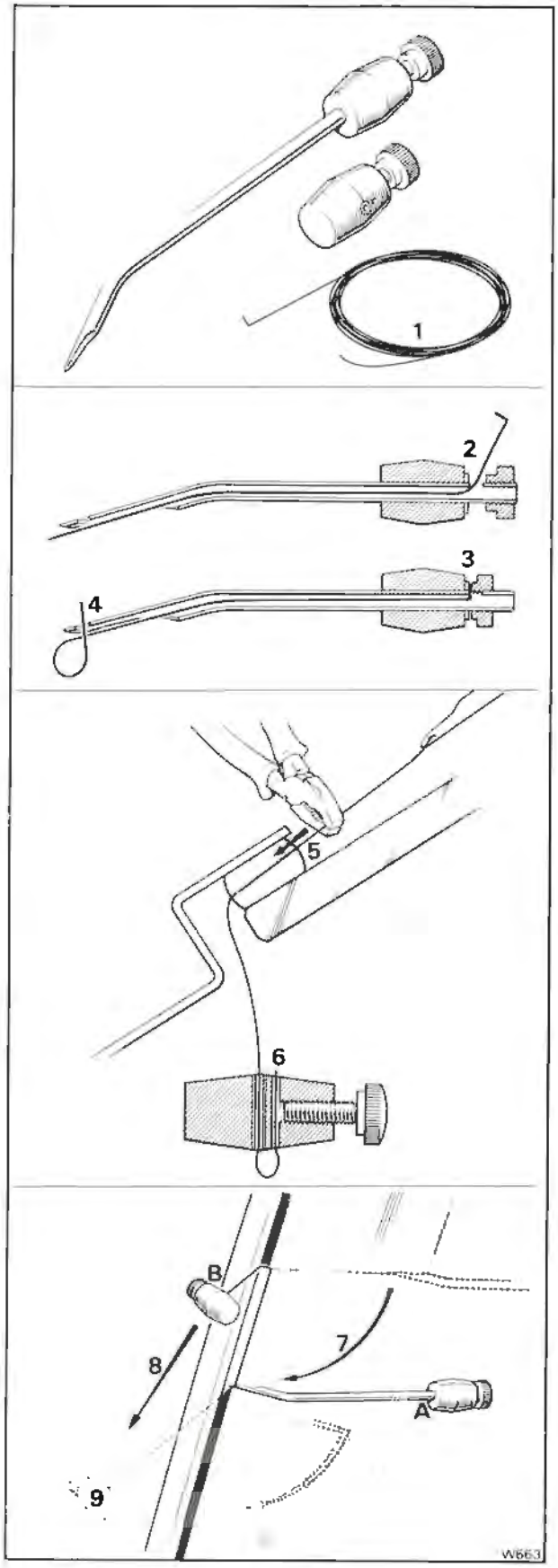

Fig. S141 Removing a windscreen bonded with Betaseal (Camargue)

Printed in England

© Rolls-Royce Motors Limited 1981

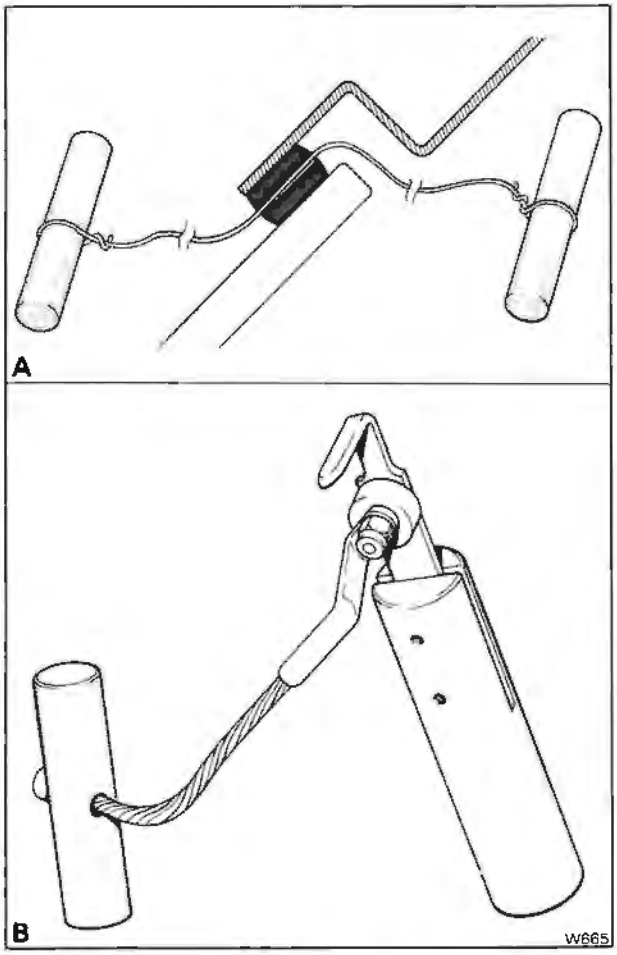

Fig. S142 Removing a windscreen bonded with Solbit (Camargue)
A Handles and strong flexible wire
B Windscreen knife (RH 9637)

Removing a windscreen bonded with Solbit

To remove a windscreen bonded with Solbit, use either of the following methods.

Handles and strong flexible wire
25. From inside the car, cut or pierce a hole through the Solbit (see Fig. S142, A). Obtain a length of strong flexible wire and thread one end of the wire through the hole in the Solbit.
26. Attach a small piece of wood to each end of the wire to act as handles (see Fig. S142, A).
27. With an assistant holding the interior handle so that the wire inside the car is lying along the line of the seal, firmly pull the exterior handle so that the wire is drawn along between the glass and the flange thus cutting through the Solbit seal. Repeat this cutting action around the periphery of the glass until it is free.

Use long steady pulls rather than short quick ones otherwise the wire will overheat and break.

Note
To avoid damage to the paintwork, keep the ends of the wire as close as possible to the glass when cutting through the Solbit seal.

Windscreen knife (see Fig. S142, B)
28. Support the windscreen with two suction pads.
29. Carefully insert the blade of the tool through the Solbit seal and behind the glass.
30. Pull the handle attached to the wire, at right-angles to the main body of the tool. Cut through the Solbit by moving the knife slowly around the complete periphery of the windscreen.
31. Remove the windscreen, lifting it out with the rubber suction pads (see Fig. S145).

Windscreen — To fit
Camargue
1. Place the cartridges of Gurit-Essex AG Betaseal

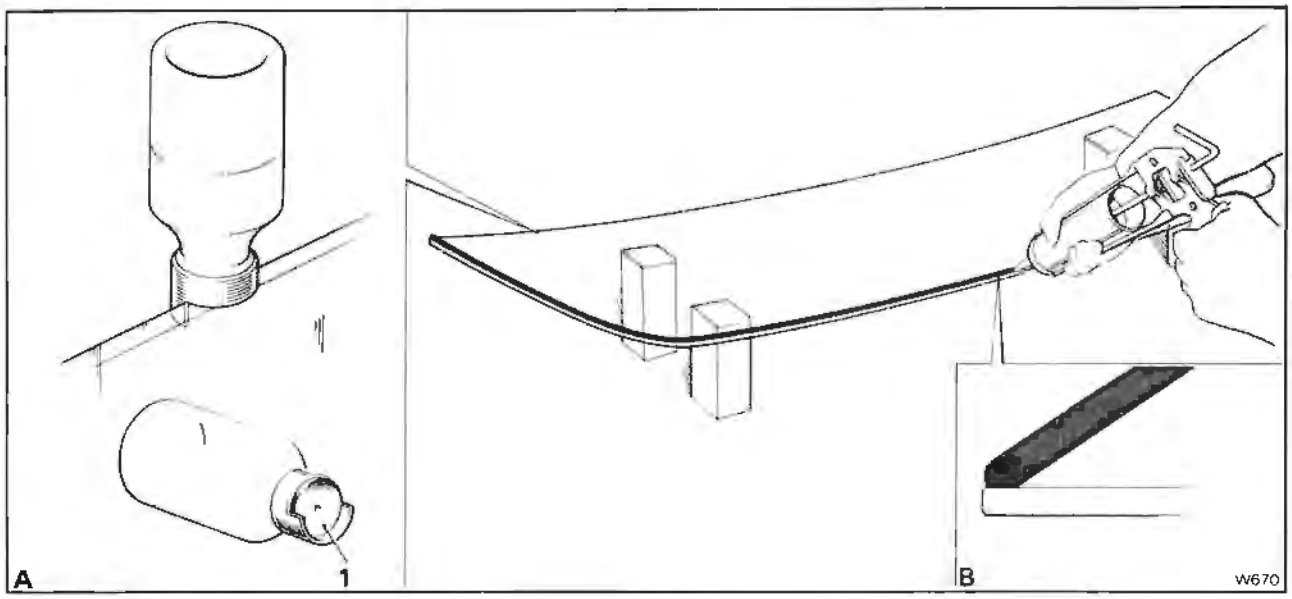

Fig. S143 Applying primer and Betaseal onto the windscreen (Camargue)
A Applying primer onto the windscreen glass
1 Felt pads
B Applying Betaseal Adhesive onto the primed edge of windscreen glass

Adhesive into a warm atmosphere approximately two hours before use.

2. Place Gosheron tape or its equivalent around the vertical face of the aperture (see Fig. S144, item A). The tape protects the paintwork and restricts the spread of excess Betaseal.

3. On a windscreen previously bonded with Solbit, thoroughly clean the windscreen aperture flanges down to the red stove primer.

Use a wooden scraper and if necessary, a light Emery cloth to remove all old sealant.

Remove all dirt and grit from the aperture; any grease should be removed with Genklene.

Clean the aperture flanges with Gurit-Essex AG No. 4 Cleaner. If any surplus cleaner remains in the bottom of the aperture, dry using clean paper tissue.

On a windscreen previously bonded with Betaseal Adhesive, it is only necessary to level off the adhesive remaining on the flange with a sharp blade. The new Betaseal Adhesive can then be bonded directly onto it noting that the size of the bead of adhesive will have to be reduced by the amount that is left on the aperture flanges.

4. Place the new windscreen upon a sound working base with the edges of the glass protruding from the base (see Fig. S142).

5. Wipe around the inside surface of the glass, approximately 25,4 mm. (1.0 in.) from the edge with de-ionized water; allow to dry.

Note

Once the procedure of preparing the edge of the glass for bonding has begun, avoid touching it.

6. Apply Gurit-Essex AG No. 4 Cleaner around the prepared strip of inner surface glass. If any surplus cleaner remains on the surface of the glass, dry using clean paper tissue.

7. Apply body primer, identified by the **red ring** on the top of the tin, onto the body flange to a width of 10 mm. (0.40 in.) from the inside edge. This should be applied with a bottle and felt pads and should be drawn carefully and steadily around the aperture giving a clean even line; allow fifteen minutes to dry.

8. Apply glass primer, identified by the **green ring** on the top of the tin, onto the prepared strip of glass to a width of 10 mm. (0.40 in.) from the inside edge (see Fig. S143). Apply with a bottle and felt pads as Operation 7; allow five minutes to dry.

9. Before fitting a cartridge of Betaseal into a sealant cartridge gun, push in the bottom of the cartridge and empty out the moisture absorbing crystals.

10. Apply a continuous bead of Betaseal Adhesive onto the primed edge of glass (see Fig. S143).

11. Fit two spacers into the bottom of the windscreen aperture to support the glass. Set them approximately 150 mm. (6 in.) from each 'A' post (see Fig. S144). Smear the spacers with petroleum jelly or its equivalent.

12. With the help of an assistant, pick up the glass with two suction pads (see Fig. S145). Place it carefully into the aperture, resting it on the bottom spacer blocks and placing two further blocks half-way up each 'A' post to centralise the windscreen glass (see Fig. S144). Do not apply excessive pressure to the windscreen; press the

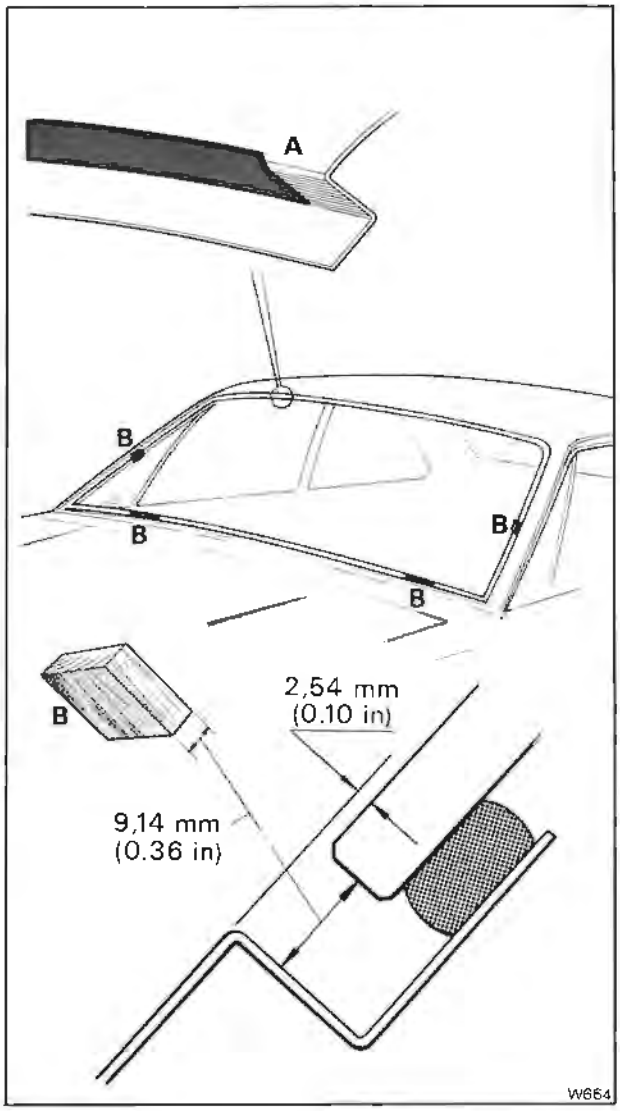

Fig. S144 Spacers in position and depth of windscreen inside aperture recess (Camargue)
A Gosheron tape in position around the windscreen aperture
B Spacing blocks

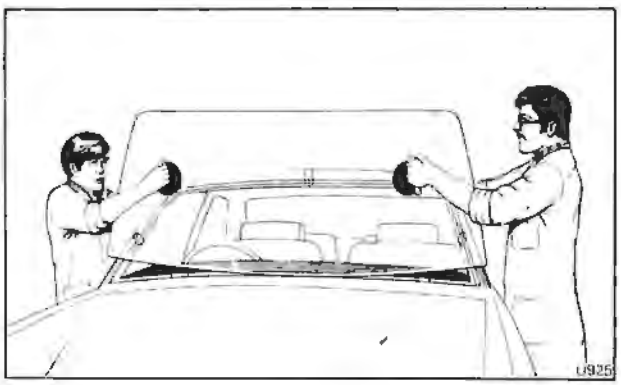

Fig. S145 Placing the windscreen into the aperture (Camargue)

Printed in England
© Rolls-Royce Motors Limited 1981

glass down until it is 2,54 mm. (0.10 in.) below the surface of the body.
13. Using a pointed piece of wood, cut through the excess Betaseal on the inside and outside of the windscreen. Leave the Betaseal Adhesive to cure for six hours, then peel off the excess Betaseal and also the Gosheron tape.
14. Lightly roughen the bonding surface of the chrome finisher with abrasive paper (see Fig. S146, item A) then, thoroughly wipe the bonding area with Genklene.
15. Apply Bostik Primer 9252 to the bonding area of the chrome finisher; allow to dry.
16. Lightly roughen the bonding surface of the small face seal with 120-180 grade 'wet or dry' abrasive paper. Thoroughly wipe the face seal, the moulded rubber seal, the windscreen aperture recess and the glass edges and flanges with Bostik Cleaner 6001; allow to dry.
17. If a new face seal is being fitted, cut the seal into two lengths; one length to fit the upper and sides of the finisher and one to fit the lower length of finisher.

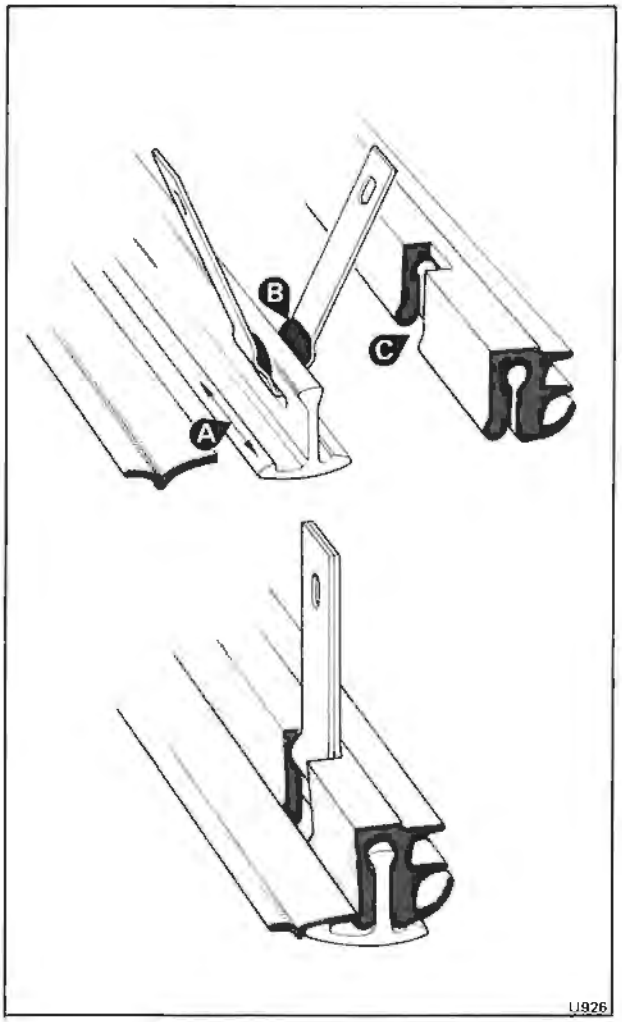

Fig. S146 Fitting the finisher/seals assembly (Camargue)
A Bonding surface of the chrome finisher
B Sealant
C Seal cut away for access of retention plate

Mitre and fit one of the lower corners of the face seal to the finisher. Apply Boscoprene Adhesive 2402 to the bonding areas of the seal and finisher leaving approximately 12,7 cm. (5.0 in.) at the unmitred ends of the strips free from adhesive to allow cutting and fitting of the remaining joint.
18. Allow between ten and fifteen minutes for the adhesive to 'flash' dry, then using maximum hand pressure fit the face seal to the finisher commencing at the mitred joint.
19. Cut and fit the mitred joint in the remaining corner of the finisher then repeat the sticking procedure.
20. Fit the four retention plates through the slots in the chrome finisher, then apply Arbomast Autograde Sealant or Seelastik inside the legs of the retention plates (see Fig. S146, item B).
Note
Mechanical windscreen retention was not fitted on cars prior to serial number 31961 therefore, the following modifications are recommended on these cars when changing a windscreen.

With the windscreen removed, mark, drill, cut and file the slots in the side flanges of the aperture (see Fig. S147, item A). Also, mark, drill, cut and file slots in the chrome finisher to correspond with those in the aperture flange (see Fig. S147, item B).
21. Examine the existing rubber seal for any sign of damage i.e. if the rubber is perished or cut. If any extensive damage is found always fit a new seal.
22. Carefully cut a section from the inside edge of the seal for the retention plates to pass through (see Fig. S146, item C). Close the legs of the plates then fit the moulded rubber seal over them and onto the chrome finisher (see Fig. S146).
23. Using a sealant cartridge gun run a 6,4 mm. (0.250 in.) bead of Arbomast Autograde Sealant or Seelastik around the edge of the glass. Also, run the same bead of sealant along the retention plate slots in the windscreen aperture to a length of 76 mm. (3 in.), as shown in Figure S148.
24. Apply Parsons Gold Size to the seal and the finisher/seal aperture.
25. With the help of an assistant, lift the finisher/seal assembly into position in the aperture. Thread the four retention plates through the slots in the aperture flanges then lightly press the finisher/seal assembly onto the glass.
26. Check that the assembly is seated evenly around the periphery of the glass then press it firmly into position. The outer lip of the moulded seal should seat evenly against the body panels, while the face seal should be firmly pressed against the windscreen (see Fig. S148 inset).
27. With the help of an assistant pressing firmly on the finisher/seal assembly on the outside of the windscreen, press the four retention plates onto the 'A' posts. Locate the holes and secure the plates into position with self-tapping screws (see Fig. S148, inset).
28. Test the windscreen for water leaks by applying water under pressure to the outside of the screen.

If the sealing is satisfactory, fit all the trim panels surrounding the windscreen by reversing the procedure given for removal.

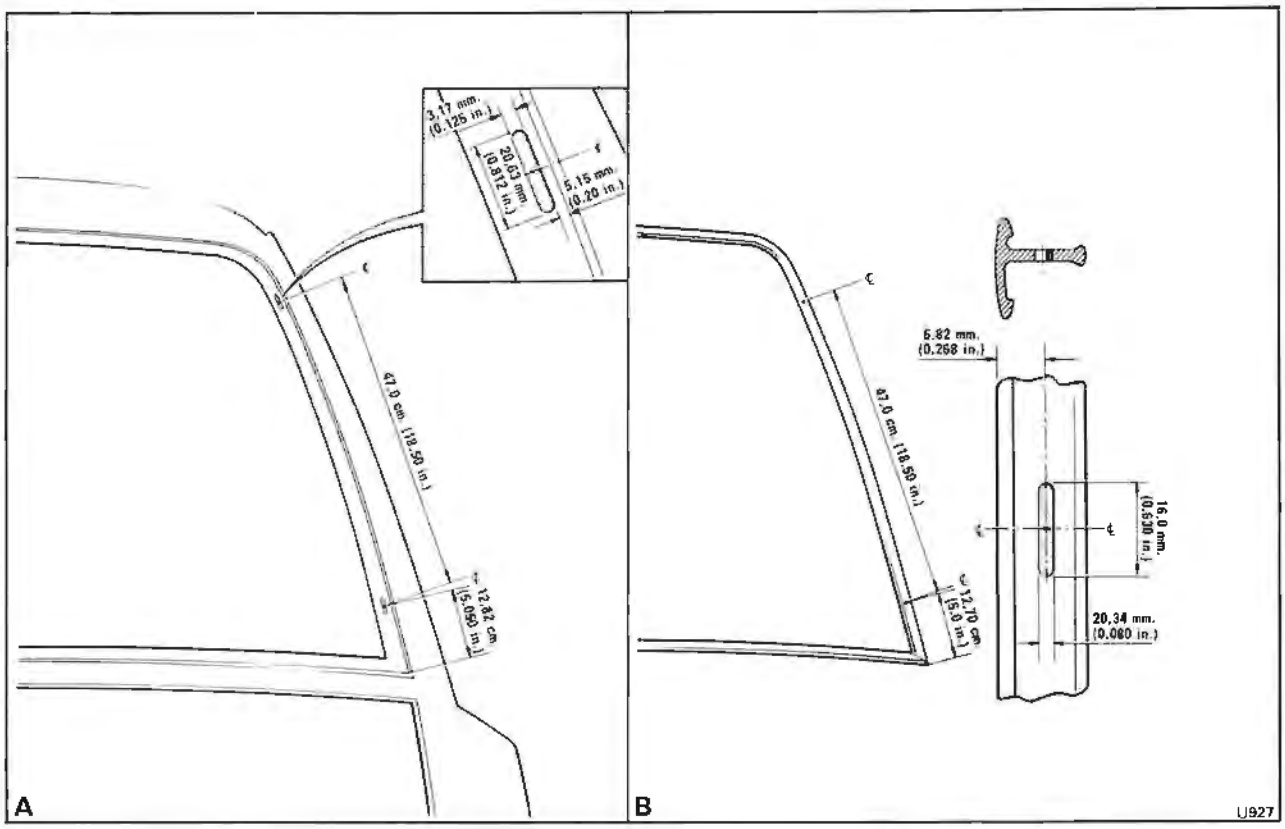

Fig. S147 Modifications to the windscreen aperture and finisher (Camargue cars prior to car serial number 31961)
A Modifications to aperture B Modifications to finisher

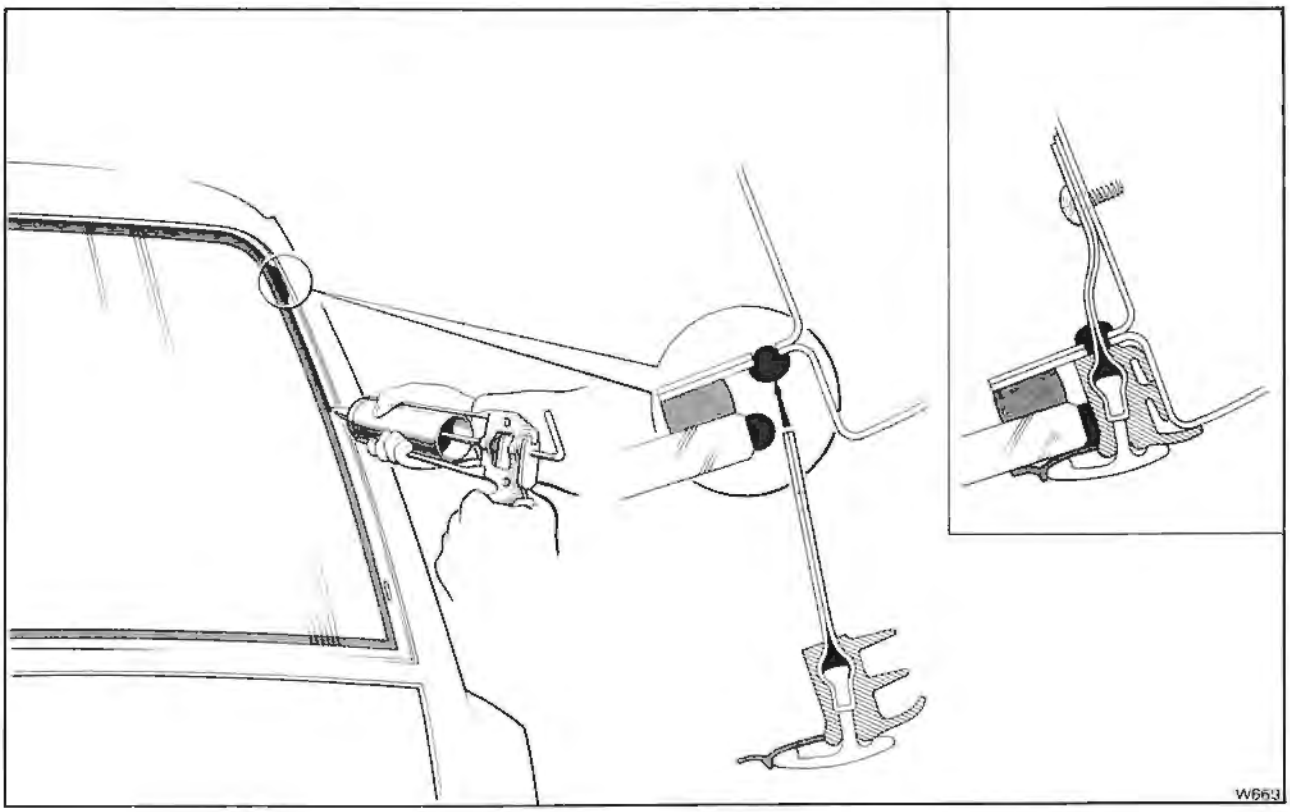

Fig. S148 Applying the sealant and fitting the windscreen retention plates to the 'A' posts (Camargue)

Printed in England
© Rolls-Royce Motors Limited 1981

Rear window — To remove
Silver Shadow II and Bentley T2
1. Disconnect the battery.
2. Protect the paintwork in the vicinity of the rear window with clean thick felt.
3. Remove the rear seat cushion.
4. Remove the self-tapping screws securing the bottom corners of the rear seat squab.

Bend the two brackets slightly inwards to avoid any possible damage to the cheek pads when the squab is removed.

5. On cars fitted with rear seat belts, remove the trim covers from the reel mechanisms. Then, remove the large chromed bolts and washers securing the reels to the parcel shelf; remove the reels.
6. Remove the carpet trim panel from the front wall of the luggage compartment.

On cars conforming to a U.S.A. or Canadian specification, remove the carpet trim panel covering the fuel tank.

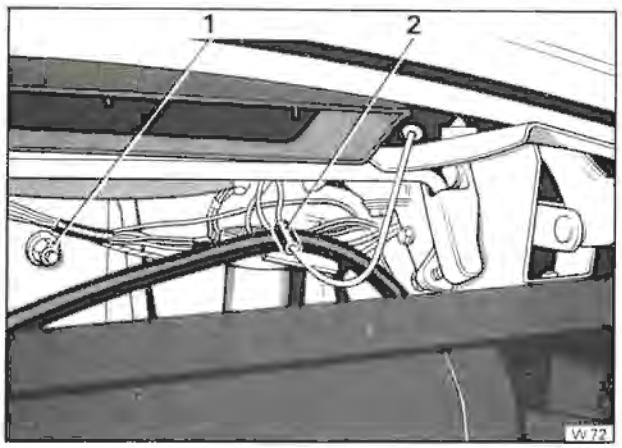

Fig. S149 Position of the rear window demister lead connections
1 Rear seat squab fixing
2 Demister lead Lucar connection

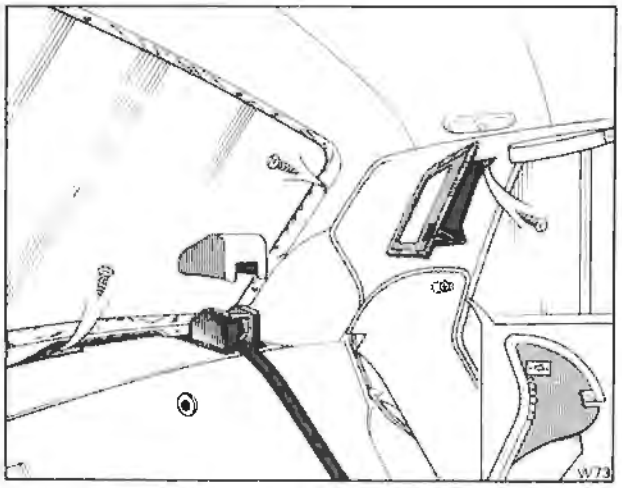

Fig. S150 Rear window interior trim (Silver Shadow II and Bentley T2)

7. Disconnect the two demister leads at their Lucar connections (see Fig. S149).
8. Remove the nut and large washer securing each side of the squab to the body (see Fig. S149); remove the squab.
9. Remove the side cheek pads (see Fig. S150, inset).
10. Remove the screws and cup washers securing the wooden finisher around the top and sides of the window; remove the finisher (see Fig. S150).
11. On cars conforming to a U.S.A. or Canadian specification, release the wooden companion from the left-hand side of the cantrail quarter panel; disconnect the electrical leads and remove the companion.

From inside the companion recess, remove the self-tapping screw securing the rear of the cantrail trim to the body.

With the rear of the cantrail trim loosened, remove the trim cover surrounding the fuel filler assembly (see Fig. S150).

12. Remove the parcel shelf trim panel by carefully pulling and sliding the panel from under the bottom finisher retaining strip.
13. Lift the trim covering the wooden retaining strip beneath the window and remove the self-tapping screws securing it to the body. Remove the strip, trim and the lower polished wood finisher (see Fig. S150).
14. Carefully pull the demister leads through the holes in the body into the rear compartment.
15. From inside the car, ease the lip of the rubber seal over the rear window aperture flange using a small steel rule or similar tool. Start at the top corners and work towards the centre, simultaneously applying pressure to the window. An assistant will be required to support the window as it is pushed out of the aperture.

Do not force the window from the aperture by applying sharp blows as this may cause damage to the body, paintwork or glass. A steady pressure is all that is required.

Rear window — To fit
Silver Shadow II and Bentley T2
1. Remove all traces of dirt, sealing compound, etc. from the window aperture flanges by wiping the flanges with Bostik Cleaner 6001.
2. Examine the existing rubber seal for any sign of damage i.e. the rubber is perished or cut. If any extensive damage is found, always fit a new seal.

Ensure that the seal is thoroughly cleaned, especially in the glass channel area with Bostik Cleaner 6001.

3. Provide a sound working base for the window to lie against while the seal is fitted i.e. a large block of wood suitably formed with a covering of felt.

Position the window on the block with its external surface uppermost.

4. Examine the existing chrome finisher, if it is extensively damaged it should be renewed.
5. Fit the rubber seal around the windscreen.

Using a sealant cartridge gun, run a continuous bead of Arbomast Autograde Sealant or Seelastik around the inside of the glass channel aperture within the moulded rubber seal (see Fig. S133). Remove any excess sealant from all surfaces using Bostik Cleaner 6001.

6. Fit the chrome finisher into the seal as follows.
Position the finisher centrally then press it into its aperture starting in the centre at both the top and bottom of the window and then work outwards. Using a small steel rule or similar tool, work the lip of the seal around the finisher.
7. Turn the window glass over so that the inner face is uppermost then, using a tool similar to the one shown in Figure S134, inset A, thread a length of thin cord around the inside edge of the rubber seal. Leave a loop in the cord at the bottom of the window and overlap the two ends of the cord at the top of the window (see Fig. S134). Temporarily secure the loose ends of the cord to the rear window with masking tape.
8. Before applying the sealant or fitting the rear window, fit 12,7 mm (0.50 in.) wide strips of Siaco black waterproof tape over the edges of the rear window aperture flanges, at the corners and the centre of the bottom flange. Also, apply the tape to any other part of the flange where the edge is particularly uneven.
9. Using a sealant cartridge gun, run a continuous bead of Arbomast Autograde Sealant or Seelastik approximately 6 mm. (0.250 in.) wide and 3 mm. (0.125 in.) high around the window aperture, forward of the outside radius.
10. Position and centralize the window glass/seal assembly into the aperture with the bottom edge entered and seated on the bottom ledge of the aperture.
11. Using a rubber mallet, apply several sharp blows around the seal/finisher starting in the centre of the top edge. The window should then be seated inside the aperture.
12. Remove the masking tape retaining the cord to the rear window.
13. With the help of an assistant pressing on the outside of the window glass and following the direction of the cord as it is removed, carefully pull the looped cord at the bottom of the window so that the lip of the seal is drawn over the aperture flange. Pull the cord steadily and evenly, alternatively to the right and left, along the bottom of the aperture and half-way up each side.
In a similar manner, carefully pull each end of the cord along the top of the window until the cord is completely removed.
Ensure that the lip of the seal is fitting over the flange at all points around the aperture. If any part of the seal is curled under the flange, it should be corrected with the skilful use of a small steel rule or a similar tool.
14. Ensure that the seal is seating flush with the body. If required apply further pressure with the rubber mallet.
If the seal will not remain flush the window should be removed and the fault determined, e.g. the aperture flange may have a high spot, in which case an experienced panel beater will be required to rectify the fault.
15. Remove any excess sealant from the inside and outside of the window with Bostik Cleaner 6001.
16. Test the window for water leaks by applying water under pressure to the outside of the glass.
If the sealing is satisfactory, fit the interior trim around the rear window by reversing the removal procedure.

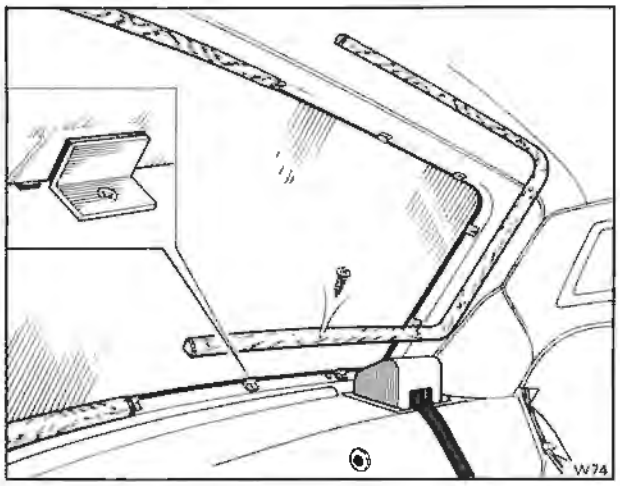

Fig. S151 Rear window interior trim (Silver Wraith II)

Rear window — To remove
Silver Wraith II
1. Disconnect the battery.
2. Protect the paintwork in the vicinity of the window with clean thick felt.
3. Remove the rear seat cushion.
4. Remove the self-tapping screws securing the bottom corners of the rear seat squab.
Bend the two brackets slightly inwards to avoid any possible damage to the cheek pads when the squab is removed.
5. On cars fitted with rear seat belts, remove the trim covers from the reel mechanisms. Remove the large chromed bolts and washers securing the reels to the parcel shelf; remove the reels.
6. Remove the carpet trim panel from the front wall of the luggage compartment.
On cars conforming to a U.S.A. or Canadian specification, remove the carpet trim panel covering the fuel tank.
On cars fitted with a centre division, remove the carpet trim panel covering the rear compartment refrigeration unit.
7. Disconnect the two demister leads at their Lucar connections (see Fig. S149).
8. Remove the nut and large washer securing each side of the squab to the body (see Fig. S149); remove the squab.
9. Cover the rear parcel shelf to protect the trim pad from damage.
10. Remove the self-tapping screws and cup washers securing both halves of the polished wood finisher around the window aperture; remove the finisher (see Fig. S151).
11. Carefully pull the demister leads into the rear compartment through the holes in the body.
12. Before removing the angled brackets securing the window glass in position, individually mark each bracket so that they can be fitted into their original positions.
Remove the self-tapping screws securing the angled brackets around the window aperture; remove the brackets (see Fig. S151).

Printed in England
© Rolls-Royce Motors Limited 1981

13. From outside the car, insert the tip of a small steel rule or similar tool between the seal and the glass. Work the rule carefully around the perimeter of the window to release the seal, simultaneously applying light pressure on the glass. An assistant will be required inside the car to support the glass as it is freed from the seal.

Rear window – To fit
Silver Wraith II

1. Remove all traces of dirt, sealing compound, etc., from the window aperture seal with Bostik Cleaner 6001.

If the original glass is to be fitted, remove the old sealant from the glass.

2. Examine the condition of the seal after cleaning, if it is damaged or perished renew the seal as follows.
3. Carefully remove the old seal. Using Bostik Cleaner 6001, remove the old sealant from the aperture taking care not to damage the Everflex roof trim; allow the cleaner to dry.
4. Roughen the bonding surface of the aperture seal with abrasive paper then wipe the seal with Bostik Cleaner 6001; allow to dry.
5. Apply Bostik Polyurethane Adhesive 3206 to the bonding faces of the seal and window aperture. Allow ten to twenty minutes for the adhesive to 'flash' dry, then position the seal around the aperture with the two ends of the seal meeting in the centre of the upper edge.

Ensure that the outer lip of the seal seats evenly all round the aperture then place strips of tape across the seal, especially in the corners, to facilitate its retention (see Fig. S152). Allow two to three hours for the adhesive to dry; full bond strength will be achieved in approximately forty-eight hours.

6. Remove the strips of tape, then apply a line of Prestik Sealing Strip 6,35 mm. (0.250 in.) wide around the inside of the aperture seal, approximately 9,50 mm. (0.375 in.) below the lip of the seal (see Fig. S152).
7. Using a sealant cartridge gun, apply an even and continuous bead of Arbomast Autograde Sealant or Seelastik between the Prestik and the lip of the seal filling in the gap between the two (see Fig. S152).
8. Place the two rubber packing pieces in position on the bottom ledge of the window aperture.
9. From inside the car, place the lower edge of the glass onto the packing pieces, centralize the glass then press it firmly into position.
10. With the glass held firmly in position wipe away the excess sealant from the perimeter of the glass then locate and fit the angled brackets to secure the glass in the aperture.

Ensure that each angled bracket is fitted into the position from which it was removed and that each bracket is complete with its rubber buffer pad fitted adjacent to the glass (see Fig. S151, inset).

11. Examine the lip of the seal adjacent to the glass; if the lip is turned under at any point, correct this with the careful use of a small steel rule or similar tool until the seal is flush with the glass.
12. Carefully ease the outer lip of the seal away from the Everflex trim. Then, apply a thin line of Bostik Seelastik between the seal and the Everflex, all around the seal. Also, apply the Seelastik to the stitched seams of the Everflex adjacent to the window seal.

Use black Seelastik on cars fitted with dark coloured Everflex and cream Seelastik on those fitted with light coloured Everflex.

13. Allow approximately twenty-four hours to dry, then remove any surplus Seelastik from the Everflex and any excess sealant from the inside and outside of the window glass using Bostik Cleaner 6001.
14. Test the window for water leaks by applying water under pressure to the outside of the glass.

If the sealing is satisfactory, fit the finisher, seat squab, etc., by reversing the removal procedure.

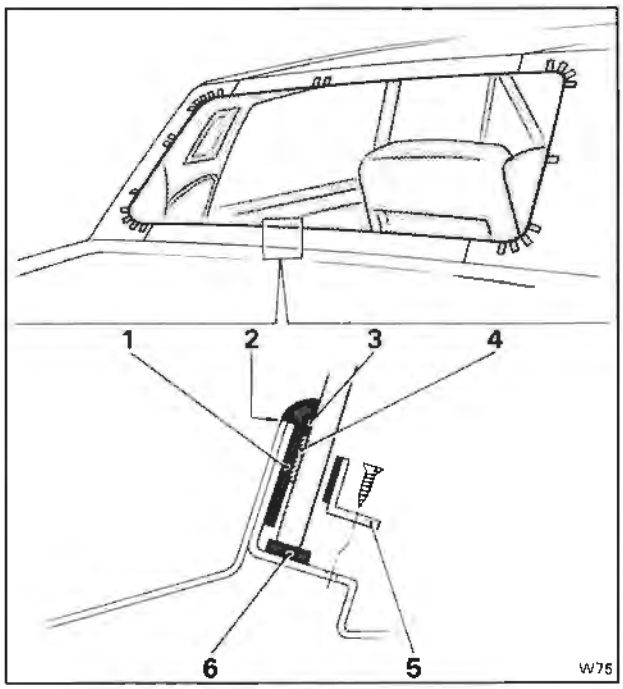

Fig. S152 Sealing and retaining the rear window (Silver Wraith II)
1. Aperture seal
2. Seelastik
3. Arbomast Autograde Sealant or Seelastik
4. Prestik Sealing Strip
5. Window retaining bracket
6. Rubber packing piece

Rear window – To remove
Corniche Saloon

1. Disconnect the battery.
2. Protect the paintwork in the vicinity of the rear window with clean thick felt.
3. Remove the rear seat cushion.
4. On cars fitted with rear seat belts, remove the trim covers from the reel mechanisms. Remove the large chromed bolts and washers securing the reels to the parcel shelf; remove the reels.
5. Remove the self-tapping screws securing the lower seat squab brackets to the body.

Lift and slide the seat squab upwards and remove the squab.

6. Release the screws and cup washers securing the

wooden finishers around the window; remove the finishers.
7. On cars conforming to a U.S.A. or Canadian specification, remove the trim cover from around the fuel filler assembly.
8. Remove the trimmed panel from above the rear window by carefully prising away the pins securing it to the wooden fillet fastened to the body.
9. Carefully mask the cantrail trim pads adjacent to the rear window to protect them when removing the glass and seal.

Also, lay a protective cover over the rear parcel shelf trim.
10. On cars fitted with the fuel tank behind the rear seat squab, remove the trim panel from the front wall of the luggage compartment.
11. Release the screws securing the trimmed cover over the hinge brackets. Lower the cover sufficiently for the demister leads to be disconnected at their 'bullet' type snap connectors then, temporarily refit the cover.
12. Carefully pull the demister leads into the rear compartment through the holes in the body.
13. From inside the car, ease the lip of the rubber seal over the window aperture flange using a small steel rule or similar tool. Start at the top corners and work towards the centre, simultaneously applying pressure to the window. An assistant will be required to support the window as it is pushed out of the aperture.

Do not force the window from the aperture by applying sharp blows as this may cause damage to the body, paintwork or glass. A steady pressure is all that is required.

Rear window — To fit
Corniche Saloon
1. Remove all traces of dirt, sealing compound, etc., from the window aperture flanges by wiping the flanges with Bostik Cleaner 6001.
2. Examine the existing rubber seal for any sign of damage i.e. the rubber is perished or cut. If any extensive damage is found, always fit a new seal.

Always ensure that the seal is thoroughly cleaned, especially in the glass channel area, with Bostik Cleaner 6001.
3. Provide a sound working base for the rear window to lie against while the seal is fitted i.e. a large block of wood suitably formed with a covering of felt.

Position the window on the block with its external surface uppermost.
4. Examine the existing chrome finishers; if they are damaged extensively i.e. the finisher is split, always renew them.
5. Fit the rubber seal around the windscreen.

Using a cartridge gun, run a continuous bead of Glasticon Gun Mastic around the inside of the glass channel aperture within the moulded rubber seal (see Fig. S133). Remove any excess mastic from all surfaces using Bostik Cleaner 6001.
6. Fit the chrome finishers into the seal as follows.

Press each finisher into its aperture. Using a small steel rule or similar tool, work the lip of the seal around the finishers. Ensure that a gap of approximately 3,2 mm. to 4,8 mm. (0.125 in. to 0.187 in.) exists between the finishers after fitting (see Fig. S138).

Fit the small chrome covers over the gaps in the finishers.
7. Turn the window glass over so that the inner face is uppermost then, using a tool similar to the one shown in Figure S134, inset A, thread a length of thin cord around the inside edge of the rubber seal. Leave a loop in the cord at the bottom of the window and overlap the two free ends of the cord at the top of the window (see Fig. S134). Temporarily secure the loose ends of the cord to the window with masking tape.
8. Using a cartridge gun, run a continuous bead of Glasticon Gun Mastic around the window aperture.
9. Position and centralise the windscreen/seal assembly into the aperture with the bottom edge entered and seated on the bottom ledge of the aperture.
10. Using a rubber mallet apply several sharp blows around the seal/finisher starting in the centre of the top edge; the window should then be seated inside the aperture.
11. Remove the masking tape retaining the cord to the window glass.
12. With the help of an assistant pressing on the outside of the window glass and following the direction of the cord as it is removed, carefully pull the looped cord at the bottom of the window so that the lip of the seal is drawn over the aperture flange. Pull the cord steadily and evenly, alternatively to the right and left, along the bottom of the aperture and half-way up each side.

In a similar manner, carefully pull each end of the cord along the top of the window until the cord is completely removed.

Ensure that the lip of the seal is fitting over the flange at all points around the aperture. If any part of the seal is curled under the flange it should be corrected with the skilful use of a small steel rule or a similar tool.
13. Ensure that the seal is seating flush with the body. If required apply further pressure with the rubber mallet.

If the seal will not remain flush the window should be removed and the fault deterined, e.g. the aperture flange may have a high spot, in which case an experienced panel beater will be required to rectify the fault.
14. Remove any excess mastic from the inside and outside of the window using Bostik Cleaner 6001.
15. Test the window for water leaks by applying water under pressure to the outside of the glass.

If the sealing is satisfactory, fit the interior trim around the rear window by reversing the removal procedure.

Rear window — To remove
Corniche Convertible
1. Before removing the Tenex fasteners from the rear edge of the hood outer covering, place a piece of masking tape adjacent to each fastener and mark its position. Remove the Tenex fasteners.
2. Remove the pin beading, then detach the hood outer covering from the body rearward of the hood pillars (see Section S12).
3. Fold the hood outer covering forward to expose the window trim (see Fig. S153, item 1).

Printed in England
© Rolls-Royce Motors Limited 1981

4. Carefully remove the two weather sealing strips situated one to each side of the window trim (see Fig. S153, items 4 and 6).
5. Using a soft wax pencil, mark each side of the window trim half-way down the length of vertical stitching securing each side of the window trim to the 'wigging'. Ensure that each mark extends across the stitching onto the canvas 'wigging'.

Also, mark half-way along the lower edge of the window trim and extend the mark rearwards onto the masking tape attached to the rear decking panel.
6. Remove the stitches securing each side of the window outer trim to the 'wigging' (see Fig. S153, item 3) detach the outer trim from the 'wigging'.
7. Remove the staples or tacks securing the lower edge of the window trim to the body; note the location and spacing of the staples to facilitate assembly (see Fig. S153, item 5).
8. Remove the tacks securing the upper corners of the window outer trim to the hood rear cross-stick.
9. Fold one side of the outer trim over the window to reveal the vertical line of hand stitches securing the window inner trim to the headlining (see Fig. S154); remove these stitches.

Repeat this operation on the opposite side of the hood trim.
10. Remove the staples securing the window inner trim to the body; note the position of the staples and the rexine sealing strip to facilitate assembly.
11. Remove the staples securing the window trim to the hood rear cross-stick noting their position and spacing to facilitate assembly (see Fig. S153, item 2).
12. Remove the window complete with its trim surround.

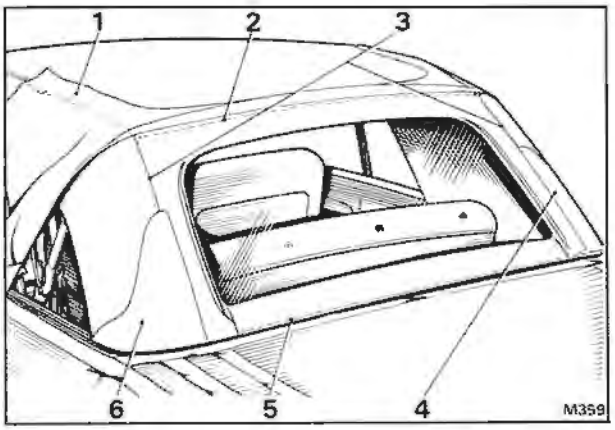

Fig. S153 Rear window and surrounding trim (Corniche Convertible)
1. Hood outer covering
2. Staples securing rear window trim to rear cross-stick assembly
3. Hand stitches securing rear window trim to 'wigging'
4. Waterproof patch
5. Staples securing rear window trim to body
6. Waterproof patch

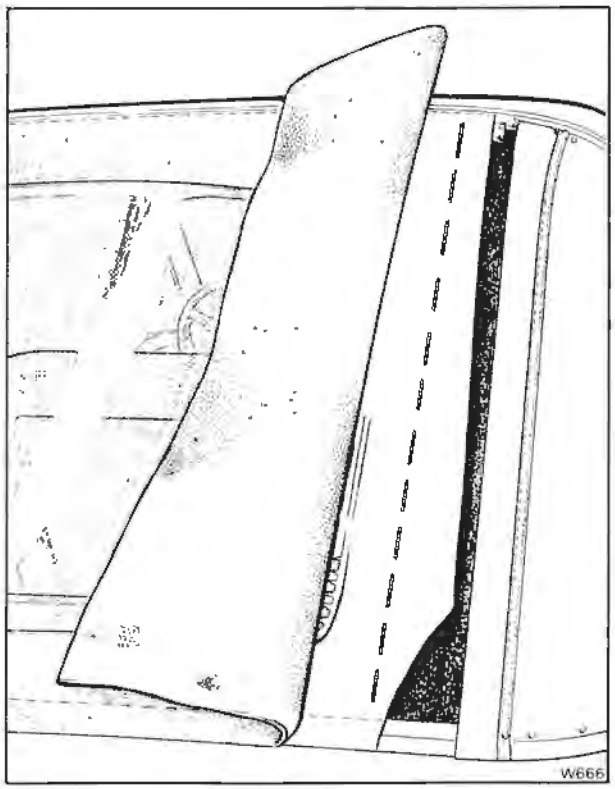

Fig. S154 Stitches securing window inner trim to headlining

Rear window — To fit
Corniche Convertible

To fit the rear window and trim reverse the procedure given for removal noting the following points.
1. When fitting a new window and trim surround, transfer the reference marks made during removal, onto the sides and lower edge of the new trim.
2. Before fitting the window, ensure that the hood is raised and the catches secured.
3. When securing the upper and lower edges of the rear window trim ensure that the reference marks made during removal are aligned.
4. Use a waterproof thread such as Terylene Thread 30/3, to secure the window trim to the headlining and 'wigging'.
5. Use Dunlop Adhesive L107 or its equivalent to secure each side of the window outer trim to the 'wigging' and also to secure the weather sealing strips on each side of the trim. Ensure that each strip overlaps the line of hand stitches (see Fig. S153, items 4 and 6).

Rear window — To remove
Camargue

1. Disconnect the battery.
2. Protect the paintwork in the vicinity of the window with clean thick felt.
3. Remove the rear seat cushion.
4. Remove the two individual rear seat squabs by removing the bolts securing the bottom edges. Pull each squab downwards until the retaining brackets at the rear of the squab are disengaged from their slots.
5. Remove the self-tapping screws securing the small

trimmed filler pieces to the body; remove the filler pieces (see Fig. S155).

6. Remove the interior roof lamps from the rear of the cantrail trim panel as follows.

Pull the lamp bezel and lens from the lamp by releasing the spring clips.

Remove the two screws securing the lamp to the roof, withdraw the lamp sufficiently to disconnect the electrical leads at the Lucar connectors and remove the lamp.

7. Remove the flexible outer cover from the coat hooks on the cantrail trim panels. Remove the two screws securing each hook to the panel; remove the hooks.

8. Remove the two screws securing the lower edge of each cantrail trim panel to the body.

Carefully lever the panels to detach the retaining clips from the body then slide the panels forward and remove.

9. Carefully lever the retaining clips securing the trim covers surrounding the seat belt reels/fuel filler tube; remove the covers.

10. Remove the four screws securing the sides of the trim panel situated above the window (see Fig. S155). Pull the panel forwards to detach the spring clips securing it to the roof; remove the panel.

11. Remove the trim panel situated below the window by pulling the panel towards the front of the car until the spring clips are released; remove the panel (see Fig. S155).

A hooked strip of metal or strong wire will assist in removing the panel but care must be taken to avoid damaging the trim.

12. On early cars, carefully remove the rubber finishing strip from the upper and side flanges of the window aperture.

13. From outside the car, carefully lever the combined chrome finisher and seal out of the recess until it is removed from the aperture. If the finisher lifts out of the seal during this operation, it will be necessary to first remove the finisher and then the seal.

Take care to avoid damaging the paintwork, window or the chrome finisher when carrying out this operation.

14. Disconnect the two demister leads at their 'bullet' type snap connectors then draw the cables through the two grommets.

The cable connectors are located behind each luggage compartment hinge assembly.

15. Before the rear window can be removed it is necessary to cut through the Solbit or Betaseal sealing the glass to the aperture. Always wear safety glasses and gloves when carrying out this operation.

Removing a rear window bonded with Betaseal

To remove a rear window, follow the same procedure as that given for removing a windscreen bonded with Betaseal on Page S8 - 9 and shown in Figure S141.

Removing a rear window bonded with Solbit

To remove a rear window, follow the same procedure as that given for removing a windscreen bonded with Solbit, on Page S8 - 10 and shown in Figure S142.

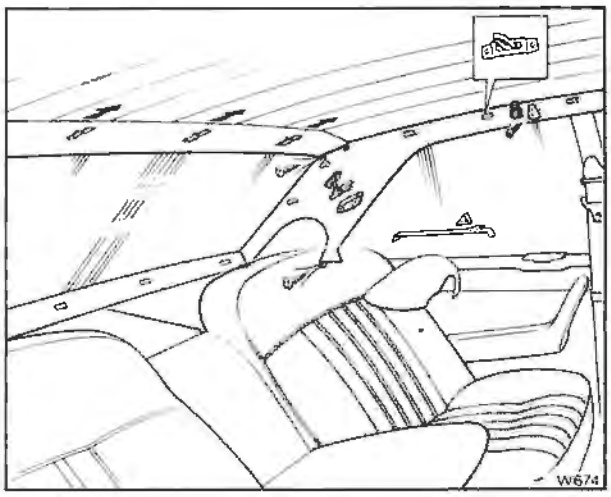

Fig. S155 Rear window interior trim (Camargue)

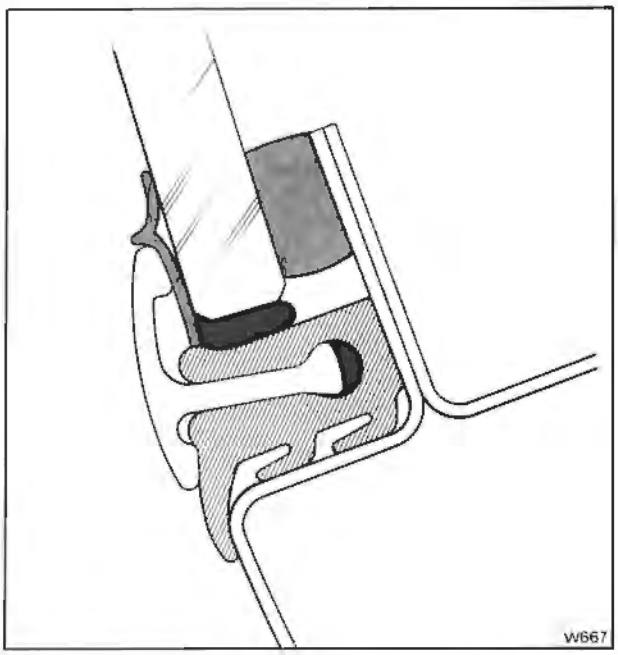

Fig. S156 Rear window sealing arrangement (Camargue)

Rear window – To fit

Camargue

1. Repeat Operations 1 to 19 inclusive from Windscreen – To fit,on Page S8 - 10.

2. Examine the existing rubber seal for any sign of damage i.e. if the rubber is perished or cut. If any extensive damage is found always fit a new seal.

3. Using a sealant cartridge gun, run a 6,4 mm. (0.250 in.) bead of Arbomast Autograde Sealant or Seelastik around the edge of the glass.

4. Apply Parsons Gold Size to the seal and the finisher/seal aperture.

5. With the help of an assistant, lift the finisher/seal assembly into position in the aperture. Lightly press the assembly onto the glass.

Printed in England
© Rolls-Royce Motors Limited 1981

6. Check that the assembly is seated evenly around the periphery of the glass then press it firmly into position. The outer lip of the moulded seal should seat evenly against the body panels, while the face seal should be firmly pressed against the window (see Fig. S156).
7. Test the window for water leaks by applying water under pressure to the outside of the glass.

If the sealing is satisfactory, fit all the trim panels surrounding the rear window by reversing the procedure given for removal.

Chapter T

Transmission

Section

T1 Introduction
T2 Servicing
T3 Testing
T4 Removal of units
T5 Gearchange actuator
T6 Transmission - To remove and fit
T7 Torque converter
T8 Vacuum modulator and valve
T9 Governor assembly
T10 Speedometer drive
T11 Sump and intake strainer
T12 Control valve unit
T13 Rear servo
T14 Detent solenoid, control valve spacer and front servo
T15 Rear extension
T16 Oil pump
T17 Control rods, levers and parking linkage
T18 Turbine shaft, forward and direct clutches, sun gear shaft and front band
T19 Intermediate clutch, gear unit, centre support and reaction carrier
T20 Transmission case
T21 Fault diagnosis
T22 Workshop tools

Printed in England

© Rolls-Royce Motors Limited 1980

August 1980

TSD 4200

Chapter T

Issue record sheet 1

June 1981

The dates quoted below refer to the issue date of individual pages within this chapter.

Section	T1	T2	T3	T4	T5	T6	T7	T8	T9	T10	T11	T12
Page No.												
1	Feb 80	Feb 80	Aug 80	Aug 80	Aug 80	Jun 81	Aug 80	Aug 80	Aug 80	Aug 80	Oct 80	Oct 80
2	Feb 80	Feb 80	Aug 80	Aug 80	Aug 80	Jun 81	Aug 80	Aug 80	Aug 80			Oct 80
3	Jun 81	Feb 80		Aug 80	Aug 80	Jun 81			Aug 80			Oct 80
4	Jun 81	Feb 80			Aug 80							Oct 80
5	Feb 80				Aug 80							Oct 80
6	Feb 80				Aug 80							Oct 80
7	Feb 80				Aug 80							Oct 80
8	Feb 80				Aug 80							Oct 80
9	Feb 80				Aug 80							Oct 80
10	Feb 80											Oct 80
11	Feb 80											
12	Feb 80											
13	Feb 80											
14	Feb 80											
15	Feb 80											
16	Feb 80											
17	Feb 80											
18	Feb 80											
19												
20												
21												
22												
23												
24												
25												
26												
27												
28												
29												
30												
31												
32												
33												
34												
35												
36												
37												
38												
39												
40												
41												
42												
43												
44												
45												
46												
47												
48												

Printed in England
© Rolls-Royce Motors Limited 1981
T.S.D. 4200

Chapter T

Issue record sheet 2

September 1982

The dates quoted below refer to the issue date of individual pages within this chapter.

Section	T13	T14	T15	T16	T17	T18	T19	T20	T21	T22		
Page No.												
1	Oct 80	Oct 80	Oct 80	Dec 80	Dec 80	Jan 81	Mar 81	Mar 81	Apr 81	Apr 81		
2	Oct 80	Oct 80		Dec 80	Dec 80	Jan 81	Mar 81	Mar 81	Apr 81			
3	Oct 80	Oct 80		Dec 80	Dec 80	Sep 82	Mar 81	Mar 81	Apr 81			
4	Oct 80	Oct 80		Dec 80		Sep 82	Mar 81	Mar 81	Apr 81			
5				Dec 80		Sep 82	Mar 81		Apr 81			
6						Sep 82	Mar 81		Apr 81			
7						Sep 82	Mar 81		Apr 81			
8						Sep 82	Mar 81		Apr 81			
9							Mar 81		Apr 81			
10							Mar 81		Apr 81			
11							Mar 81		Apr 81			
12							Mar 81		Apr 81			
13									Apr 81			
14									Apr 81			
15									Apr 81			
16									Apr 81			
17									Apr 81			
18												
19												
20												
21												
22												
23												
24												
25												
26												
27												
28												
29												
30												
31												
32												
33												
34												
35												
36												
37												
38												
39												
40												
41												
42												
43												
44												
45												
46												
47												
48												

Printed in England
© Rolls-Royce Motors Limited 1982

Section T1

Introduction

	Page
Hydraulic system	T1 - 4
Pressure control	T1 - 4
Vacuum modulator assembly	T1 - 4
Governor assembly	T1 - 4
Operation of valves and hydraulic control units	T1 - 5
Drive and Intermediate - First gear	T1 - 6
Drive - Second gear	T1 - 6
Drive - Third gear	T1 - 16
Part throttle down-change	T1 - 16
Detent down-change	T1 - 16
Intermediate - Second gear	T1 - 17
Low range - First gear	T1 - 17
Reverse	T1 - 18
Park or Neutral - Engine running	T1 - 18

Printed in England

© Rolls-Royce Motors Limited 1980

February 1980

TSD 4200

Section T1

Introduction

The torque converter transmission is a fully automatic unit, consisting primarily of a three-element hydraulic torque converter and a compound planetary gear train. Three multiple-disc clutches, two roller clutch units (one roller clutch and one sprag clutch from serial numbers 79-RR-3015, 79-RS-2730 and onwards; also all 80-RC transmissions) and two friction bands provide the elements which are required to obtain the desired functions of the gear train.

A name plate is fitted to the right-hand side of the transmission, toward the centre of the case. The serial number is prefixed by either the letters RS, RR or RC and the year in numerals.

The torque converter, clutches and rollers connect the engine to the planetary gears with the aid of pressurised transmission fluid. Three forward gears and reverse are provided. When necessary, the torque converter will supplement the gears by multiplying engine torque.

The torque converter is of welded steel construction and cannot be dismantled. The unit is made up of two vaned sections which face each other across a fluid filled housing. The pump half of the converter is connected to the engine and the turbine half is connected to the transmission.

When the engine is running the converter pump rotates and throws fluid against the turbine, causing the turbine to rotate. The fluid then returns to the pump in a circular flow and continues this cycle as long as the engine is running.

The converter also has a smaller vaned section, called a stator, which directs the fluid back to the pump through smaller openings at greater speed. The speeded-up fluid imparts additional force to the engine driven converter pump, thus multiplying engine torque.

A hydraulic system pressurised by an internal/external gear type of pump provides the working pressure required to operate the friction elements and automatic controls.

The external control connections to the transmission are:

An electric gear change actuator, connecting rod and levers. The actuator responds to an electrical signal from a switch on the steering column, then moves the gear change lever on the transmission to the required position.

Engine vacuum which operates a vacuum modulator unit.

12 volt electrical signals to operate an electrical detent solenoid.

Gear or torque ratios of the transmissions are

First	-	2.5:1
Second	-	1.5:1
Third	-	1.0:1
Reverse	-	2.0:1

Each gear ratio can be multiplied by as much as two, depending upon the slip speed of the converter pump and turbine.

A vacuum modulator is used to automatically sense engine torque input to the transmission. The vacuum modulator transmits this signal to the pressure regulator which controls main line pressure, so that all the torque requirements of the trans-mission are met and the correct gear change spacing is obtained at all throttle openings.

The detent solenoid is activated by a micro-switch assembly which is mounted to the toeboard, beneath the accelerator pedal. When the pedal is in the kickdown position, the micro-switch is closed; the solenoid in the transmission is then activated and a down-change will occur at speeds below 113 k.p.h. (70 m.p.h.). At lower speeds a down-change will occur at smaller throttle openings without the aid of the micro-switch assembly, or the solenoid.

The heat exchanger for the transmission fluid is situated in the bottom of the radiator matrix (see Fig. T1). The fluid system incorporates an intake pipe and strainer assembly. An internal by-pass permits increased flow during cold operation when the oil is heavier.

The transmission quadrant has six selector positions which enable the driver to control the operation of the transmission under varying driving conditions. The six selector positions appear in the following sequence, from left to right; 'P' - Park 'R' - Reverse, 'N' - Neutral, 'D' - Drive, 'I' - Inter mediate and 'L' - Low. The engine can only be started in the Park and Neutral positions.

'P' - Park position positively locks the output shaft to the transmission case by means of a locking pawl and prevents the car from rolling either backward or forward when parked on a steep incline.

'R' - Reverse enables the car to operate in a reverse direction.

'N' - Neutral enables the engine to be started and run without the car moving.

'D' - Drive is used for all normal driving conditions and maximum economy. Drive range has three gear ratios, from starting to direct drive. Forced down-changes are available for safe and rapid overtaking, by fully depressing the accelerator pedal.

Printed in England

© Rolls-Royce Motors Limited 1981

June 1981

TSD 4200

'I' - Intermediate adds new performance for congested traffic conditions or hilly terrain. This range has the same starting ratio as 'D', but prevents the transmission from changing above second gear; acceleration is retained when extra performance is required.

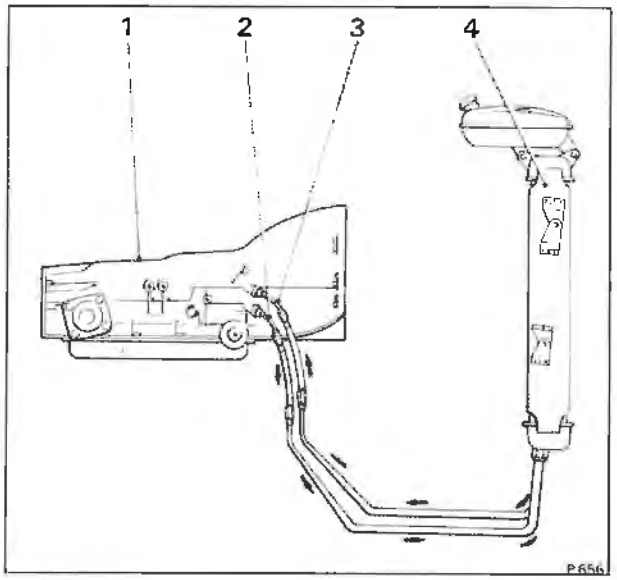

Fig. T1 Heat exchanger system
1 Transmission
2 Transmission fluid to heat exchanger
3 Transmission fluid from heat exchanger
4 Coolant radiator with heat exchanger in bottom tank

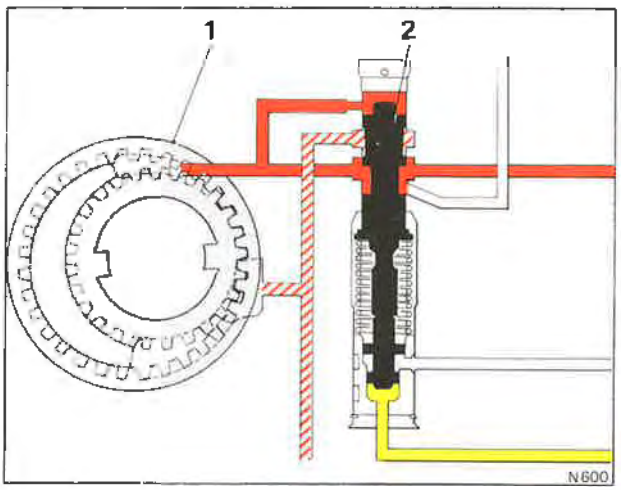

Fig. T2 Pressure control
1 Transmission oil pump
2 Pressure regulator valve train

Main line pressure
Intake pressure
Converter pressure
Modulator pressure

The engine can be used to assist braking in this Range.

'L' - Low range permits operation at a lower gear ratio and should be used when maximum torque multiplication is required or, when descending a steep gradient. When the selector lever is moved from Drive to Low at normal road speeds, the transmission will change to second gear and remain in second gear until the speed of the car is reduced to the normal 2-1 down-change speed. The transmission will then change down to first gear and remain in first gear regardless of car speed or engine revolutions, until the selector lever is moved into either the Drive or the Intermediate position.

Hydraulic system

Pressure control

The transmission is controlled automatically by a hydraulic system (see Fig. T2). Hydraulic pressure is supplied by the transmission oil pump, which is engine driven.

Main line oil pressure is controlled by a pressure regulator valve train which is located in the pump and by the vacuum modulator which is connected to engine vacuum.

The pressure regulator controls main line oil pressure automatically, in response to a pressure signal from a modulator valve, in such a manner, that the torque requirements of the transmission clutches are met and correct gearchange spacing is obtained at all throttle openings.

To control line pressure, a modulator pressure is used. This pressure varies in the same manner as torque input to the transmission. Since the torque input to the clutches is the product of engine torque and converter ratio, modulator pressure must compensate for changes in either or both of these.

To meet these requirements, modulator pressure is regulated by engine vacuum, which is an indicator of engine torque and carburetter throttle opening. It will decrease as the car speed increases to compensate for the changing converter torque ratio.

Vacuum modulator assembly

The engine vacuum signal is received by the vacuum modulator (see Fig. T3), which comprises an evacuated metal bellows, a diaphragm and two springs. The assembly is so arranged that the bellows and external spring apply a force that acts on the modulator valve so that it increases modulator pressure. Engine vacuum and an internal spring oppose the bellows and external spring to control modulator pressure.

To reduce the effect of altitude on change points, the effective area of the diaphragm is different than that of the bellows. Atmospheric pressure acts on the resulting differential area to reduce modulator pressure.

Governor assembly

The speed of the car is signalled to the transmission

by a governor which is driven by the transmission output shaft. The governor is comprised basically of a valve body, a regulator valve and flyweights.

Centrifugal force causes the flyweights to act on the regulator valve. The valve then regulates a pressure signal which increases with road speed.

Governor pressure acts on the modulator valve to cause modulator pressure to decrease as the speed of the car increases.

Operation of valves and hydraulic control units

Line pressure regulator

The line pressure regulator valve regulates line pressure according to pump speed and engine torque.

Manual valve

The manual valve establishes the range in which the transmission is to operate as selected by the driver through the selector switch and the gear change actuator.

Governor assembly

The governor assembly generates an oil pressure that is sensitive to the speed of the car and which increases as the car speed increases.

Governor pressure is used to control the change points and to regulate modulator pressure.

Vacuum modulator valve

The vacuum modulator valve provides modulator pressure which senses engine torque and car speed. It is used to vary the change points, according to throttle opening, by opposing governor oil on the shift valves and also to raise line pressure proportional to engine torque.

1-2 shift valve

This valve controls the speeds at which the 1-2 and 2-1 changes occur.

1-2 regulator valve

The 1-2 regulator valve regulates modulator pressure to a proportional pressure and tends to hold the 1-2 shift valve in the down-change position.

1-2 detent valve

The 1-2 detent valve senses regulated modulator pressure which tends to hold the 1-2 shift valve in the down-changed position and provides an area for detent pressure for 2-1 detent changes.

2-3 shift valve

This valve controls the speeds at which the 2-3 and 3-2 changes occur.

2-3 modulator valve

The 2-3 modulator valve is sensitive to modulator pressure and applies a variable force on the 2-3 shift valve which tends to hold the 2-3 shift valve in the down-changed position.

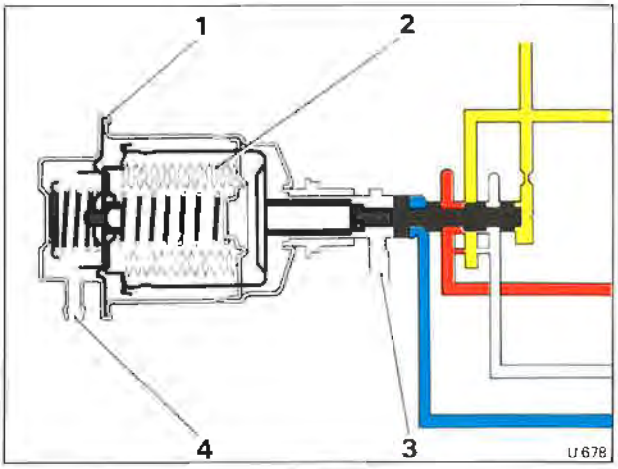

Fig. T3 Vacuum modulator assembly

1 Diaphragm
2 Aneroid bellows
3 Exhaust
4 Engine vacuum

Main line pressure
Governor pressure
Modulator pressure

3-2 valve

The 3-2 valve prevents modulator pressure from acting on the shift valves after the direct clutch has been applied. This allows fairly heavy throttle operation in third gear without effecting a down-change. In third gear, detent pressure or modulator pressure above 6,1 kgf.sq.cm. (87 lbf.sq.in.) can be directed to the shift valves to provide the necessary force to effect the down-change.

1-2 accumulator valve

The 1-2 accumulator valve is sensitive to modulator oil and regulates drive oil to a proportionally smaller value. The pressure increases as modulator pressure increases and is used to control the engagement of the intermediate clutch.

Detent valve

The detent valve moves when line oil is exhausted from the end of the valve when the detent solenoid is energised. As a result, detent oil is directed to the 1-2 and 2-3 modulator valves and allows the detent regulator valve to regulate.

Detent regulator valve

When the detent valve moves, the detent regulator is freed and allows drive oil to enter the detent passage at a regulated pressure of 4,9 kgf.sq.cm. (70 lbf.sq.in.). Detent oil will also flow into the modulator passages which lead to the shift valves. Low oil moves the detent regulator to accept drive oil, allowing drive oil to enter the modulator and detent passages.

Printed in England
© Rolls-Royce Motors Limited 1980

Rear servo and accumulator assembly
The rear servo applies the rear band for engine braking in Low range 1st.gear. It also applies the rear band in Reverse to hold the reaction carrier to provide the reverse gear ratio.

During the 1-2 up-change in Drive and Intermediate ranges the servo acts as an accumulator for the intermediate clutch oil to provide a smooth up-change.

Front servo
The front servo applies the front band to provide engine braking in 2nd.gear in Low and Intermediate ranges. It is used also as an accumulator for direct clutch oil during the application of the direct clutch and in conjuntion with a series of check balls which control orifices, is part of the timing for the release of the direct clutch.

To prevent the application of the front band in Neutral, Drive or Reverse ranges, oil is directed from the manual valve to the release side of the servo piston.

In 'D' range, the servo release oil from the manual valve is used to charge the servo in preparation for the application of the direct clutch.

Direct clutch oil is directed to the front servo accumulator piston where spring force plus direct clutch pressure, stroke the piston up against the force of the servo release oil. This lowers the clutch apply pressure for a smooth engagement.

The release of the direct clutch and the exhausting of the front servo accumulator is slowed down by three check balls and three orifices. This permits a smooth return of the drive load to the intermediate roller clutch and also allows the engine r.p.m. to increase during a detent 3-2 down-change in preparation for the lower gear ratio, which results in a smooth change and better acceleration.

The position of the shift valves in each range and gear, and the various oil passages which are used are shown in Figures T4 to T12. The operation of the valves when each gear is selected is described in the following paragraphs.

Drive and Intermediate - First gear

Power flow
Forward clutch - applied. Direct clutch - released. Intermediate clutch - released. Roller clutch - effective. Front band - released. Intermediate roller clutch - ineffective. Rear band - released.

With the selector lever in either Drive or Intermediate range, the forward clutch is applied. This delivers turbine torque to the mainshaft and turns the rear internal gear clockwise. (Converter torque ratio is approximately 2 : 1 at stall.)

Clockwise motion of the rear internal gear causes the rear pinions to turn clockwise to drive the sun gear anti-clockwise. In turn, the sun gear drives the front pinions clockwise, thus turning the front internal gear, output carrier, and output shaft clockwise in a reduction ratio of approximately 2.5 : 1. Reaction of the front pinions against the front internal gear is taken by reaction carrier and roller clutch assembly to the transmission case. (Approximate stall ratio - 5 : 1.)

Oil flow
When the selector lever is moved to either Drive or Intermediate position, the manual valve is repositioned to allow line pressure to enter the drive circuit. Drive oil then flows to the following (see Fig. T4):
Forward clutch
1 - 2 Shift valve
Governor assembly
1 - 2 Accumulator valve
Detent regulator valve

Basic control
Drive oil is directed to the forward clutch where it acts on two areas of the clutch piston to apply the forward clutch. The first, or inner area, is fed through an unrestricted passage. The outer area is fed through an orifice to ensure a smooth change into Drive.

Drive oil at the governor assembly is regulated to a variable pressure. This pressure increases with car speed and acts against the ends of the 1-2 and 2-3 shift valves and an area on the modulator valve.

Drive oil is regulated also to another variable pressure at the 1-2 accumulator valve. This pressure is controlled by modulator oil and is directed to the rear servo. 1 - 2 accumulator oil at the rear servo acts on the accumulator piston.

In addition, to maintain the lower pressure in the 1 - 2 accumulator passage, the 1 - 2 accumulator valve intermittently uncovers the Low oil passage and oil is exhausted at the manual valve.

Summary
The converter is filled. The forward clutch is applied. The transmission is in first gear.

Drive - Second gear

Power flow
Forward clutch - applied. Direct clutch - released. Intermediate clutch - applied. Roller clutch - ineffective. Front band - released. Intermediate roller clutch - effective. Rear band - released.

In second gear the intermediate clutch is applied to allow the intermediate roller clutch to hold the sun gear against anti-clockwise rotation. Turbine torque through the forward clutch is then applied clockwise through the mainshaft to the rear internal gear.

Clockwise rotation of the rear internal gear turns the rear pinions clockwise against the stationary sun gear. This causes the output carrier and output shaft to turn clockwise in a reduction ratio of approximately 1.5 : 1.

Note
Further reduction is possible at low speeds, due to the torque multiplication provided by the converter.

© Rolls-Royce Motors Limited 1980
Printed in England

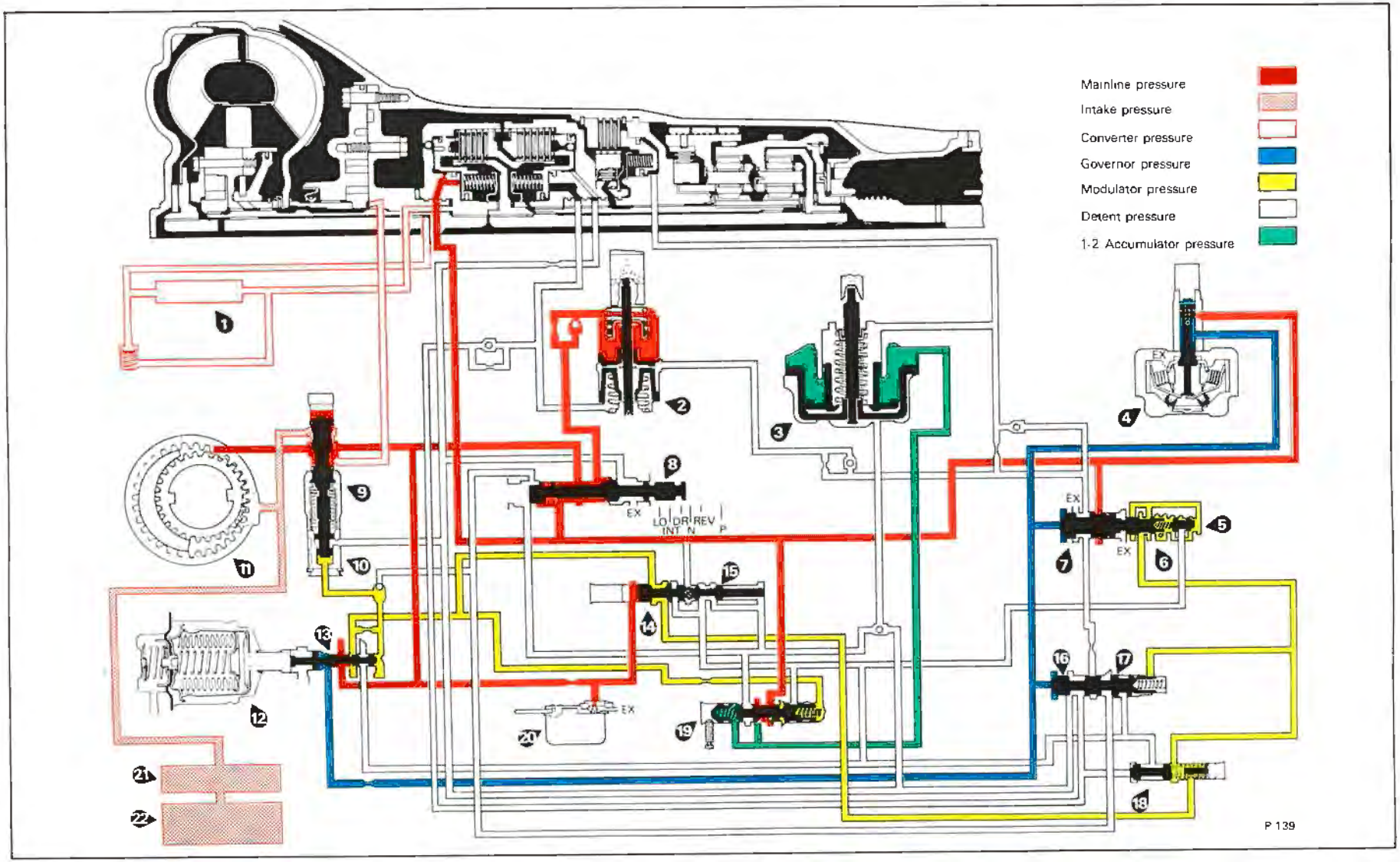

Fig. T4 Drive range - 1st gear

1 Heat exchanger
2 Front servo
3 Rear servo
4 Governor assembly
5 Regulator plug
6 1-2 detent valve
7 1-2 valve
8 Manual valve
9 Pressure regulator
10 Boost valve
11 Pump
12 Vacuum modulator
13 Modulator valve
14 Detent valve
15 Regulator valve
16 2-3 valve
17 2-3 modulator valve
18 3-2 valve
19 1-2 accumulator valve
20 Detent solenoid
21 Oil strainer
22 Sump

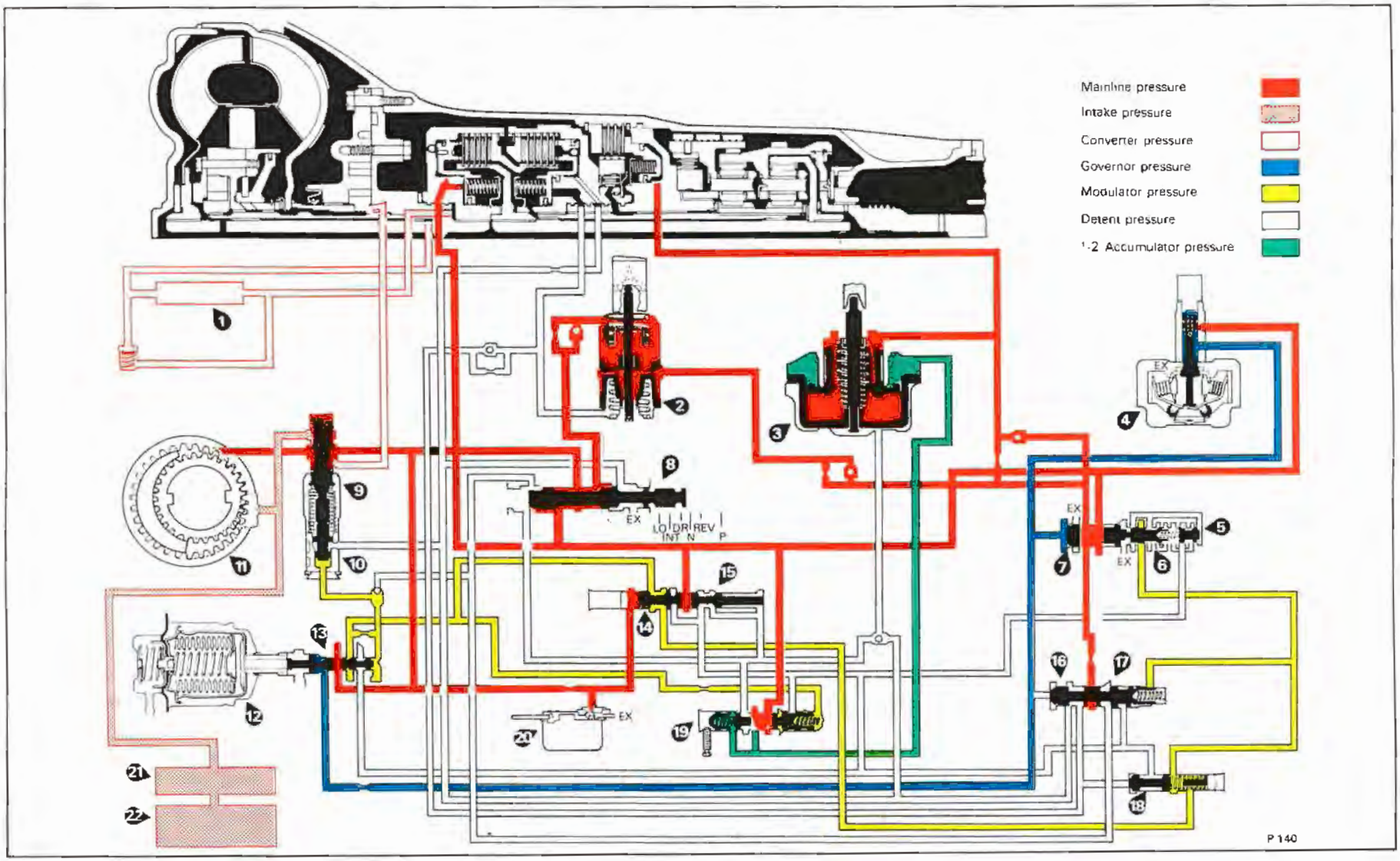

Fig. T5 Drive range - 2nd gear

1 Heat exchanger
2 Front servo
3 Rear servo
4 Governor assembly
5 Regulator plug
6 1-2 detent valve
7 1-2 valve
8 Manual valve
9 Pressure regulator
10 Boost valve
11 Pump
12 Vacuum modulator
13 Modulator valve
14 Detent valve
15 Regulator valve
16 2-3 valve
17 2-3 modulator valve
18 3-2 valve
19 1-2 accumulator valve
20 Detent solenoid
21 Oil strainer
22 Sump

© Rolls-Royce Motors Limited 1980
Printed in England

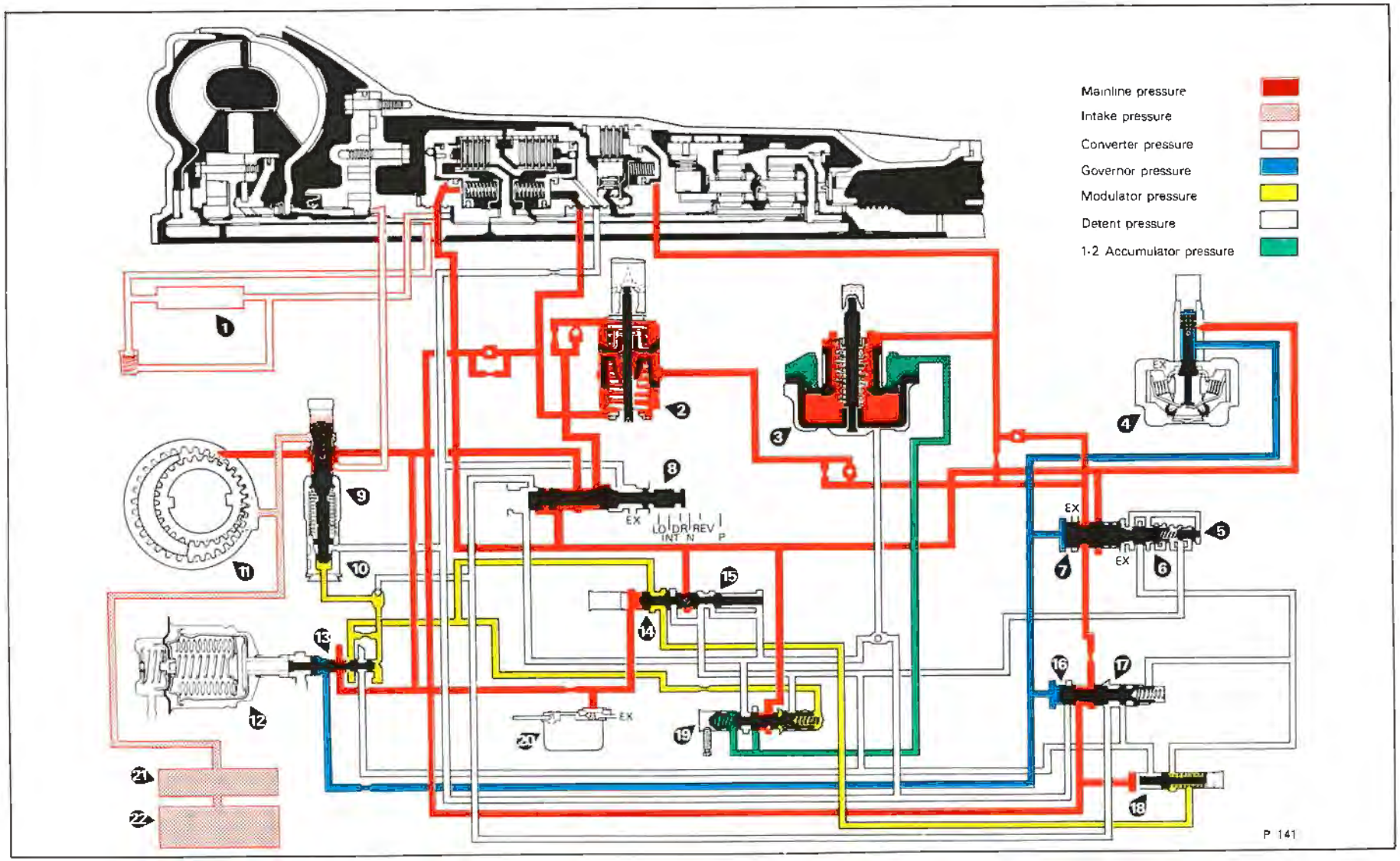

Fig. T6 Drive range - 3rd gear

1 Heat exchanger
2 Front servo
3 Rear servo
4 Governor assembly
5 Regulator plug
6 1-2 detent valve
7 1-2 valve
8 Manual valve
9 Pressure regulator
10 Boost valve
11 Pump
12 Vacuum modulator
13 Modulator valve
14 Detent valve
15 Regulator valve
16 2-3 valve
17 2-3 modulator valve
18 3-2 valve
19 1-2 accumulator valve
20 Detent solenoid
21 Oil strainer
22 Sump

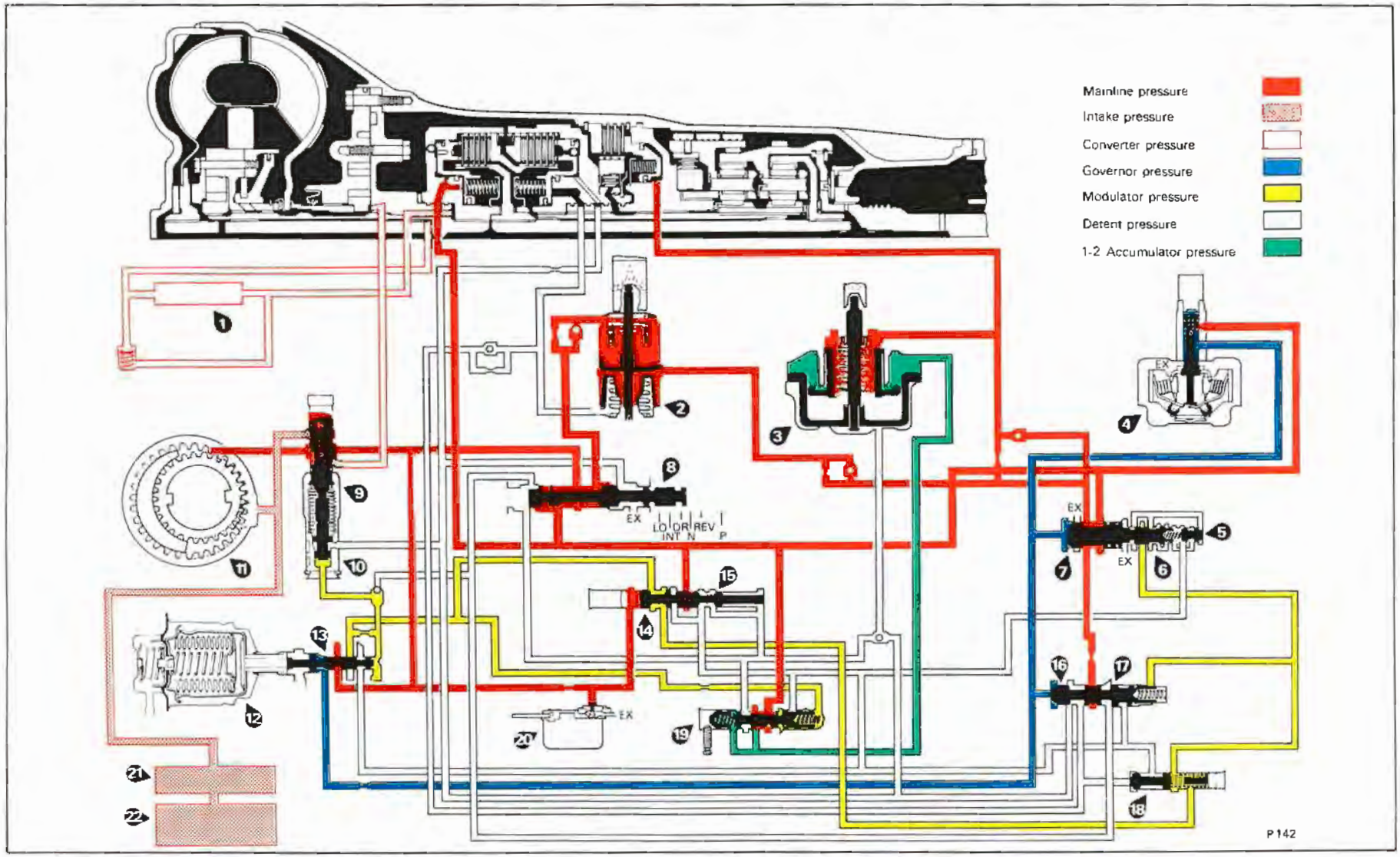

Fig. T7 Part throttle down - change

1 Heat exchanger
2 Front servo
3 Rear servo
4 Governor assembly
5 Regulator plug
6 1-2 detent valve
7 1-2 valve
8 Manual valve
9 Pressure regulator
10 Boost valve
11 Pump
12 Vacuum modulator
13 Modulator valve
14 Detent valve
15 Regulator valve
16 2-3 valve
17 2-3 modulator valve
18 3-2 valve
19 1-2 accumulator valve
20 Detent solenoid
21 Oil strainer
22 Sump

© Rolls-Royce Motors Limited 1980
Printed in England

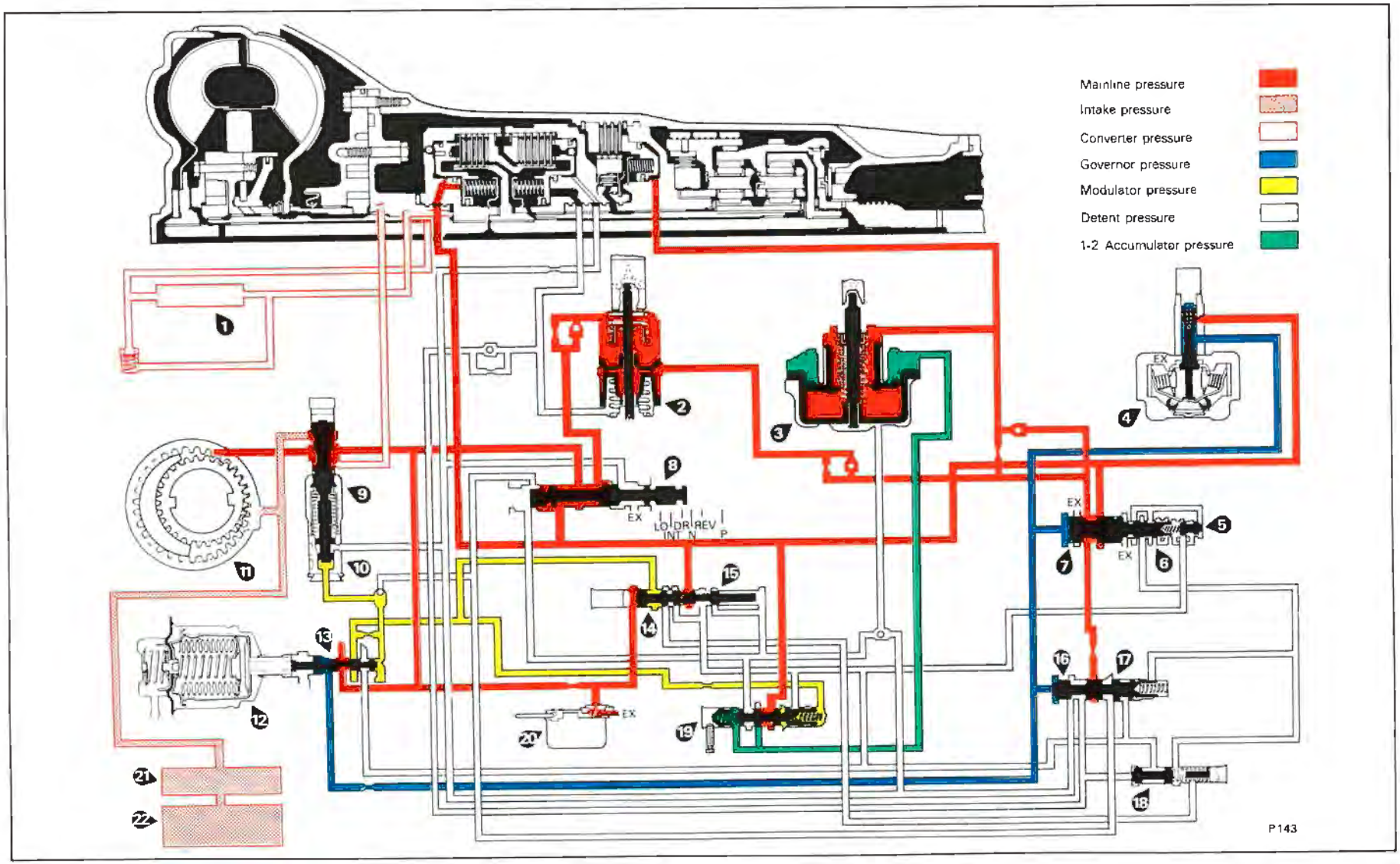

Fig. T8 Detent down - change

1 Heat exchanger
2 Front servo
3 Rear servo
4 Governor assembly
5 Regulator plug
6 1-2 detent valve
7 1-2 valve
8 Manual valve
9 Pressure regulator
10 Boost valve
11 Pump
12 Vacuum modulator
13 Modulator valve
14 Detent valve
15 Regulator valve
16 2-3 valve
17 2-3 modulator valve
18 3-2 valve
19 1-2 accumulator valve
20 Detent solenoid
21 Oil strainer
22 Sump

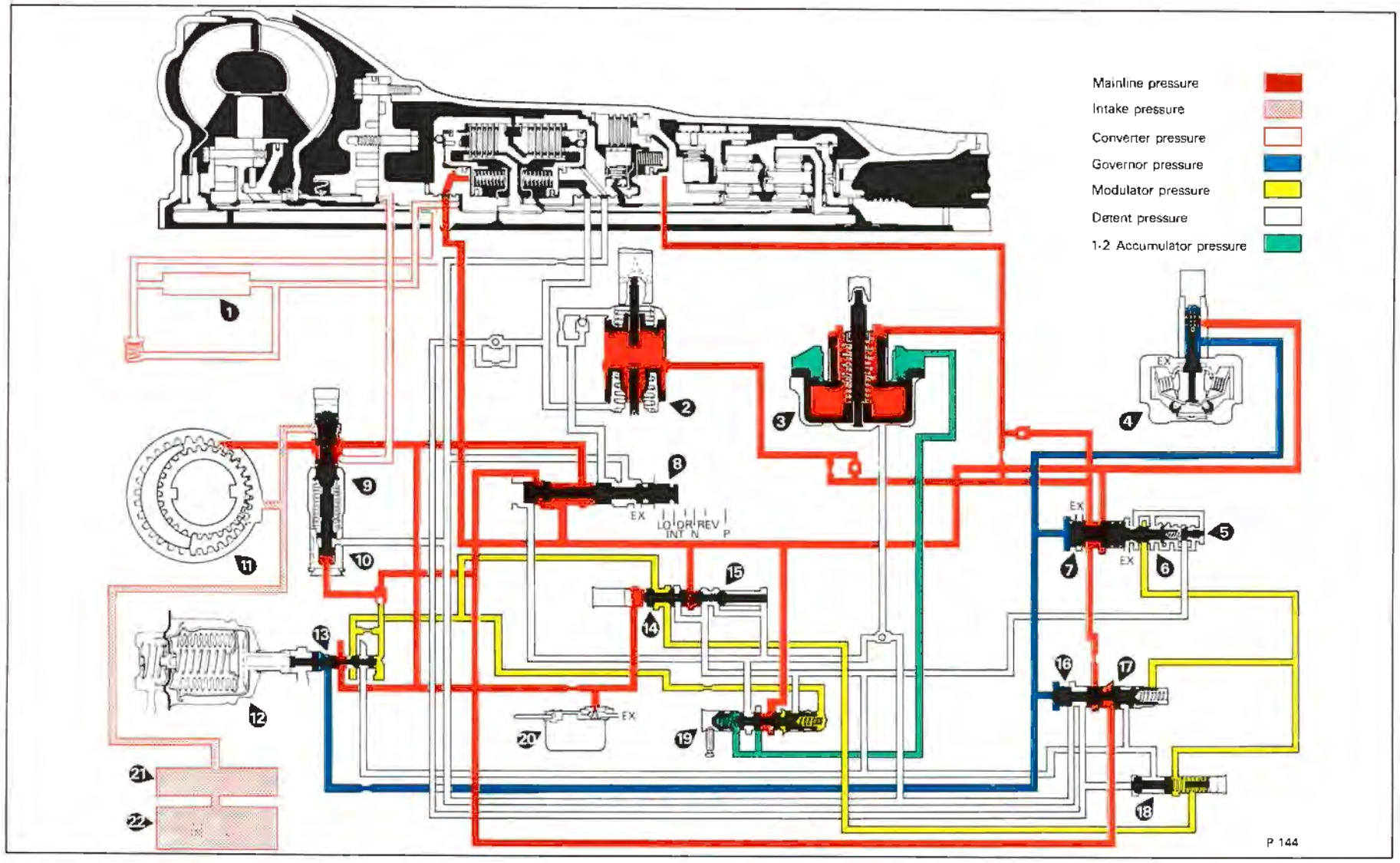

Fig. T9 Intermediate range - 2nd gear

1 Heat exchanger
2 Front servo
3 Rear servo
4 Governor assembly
5 Regulator plug
6 1-2 detent valve
7 1-2 valve
8 Manual valve
9 Pressure regulator
10 Boost valve
11 Pump
12 Vacuum modulator
13 Modulator valve
14 Detent valve
15 Regulator valve
16 2-3 valve
17 2-3 modulator valve
18 3-2 valve
19 1-2 accumulator valve
20 Detent solenoid
21 Oil strainer
22 Sump

© Rolls-Royce Motors Limited 1980
Printed in England

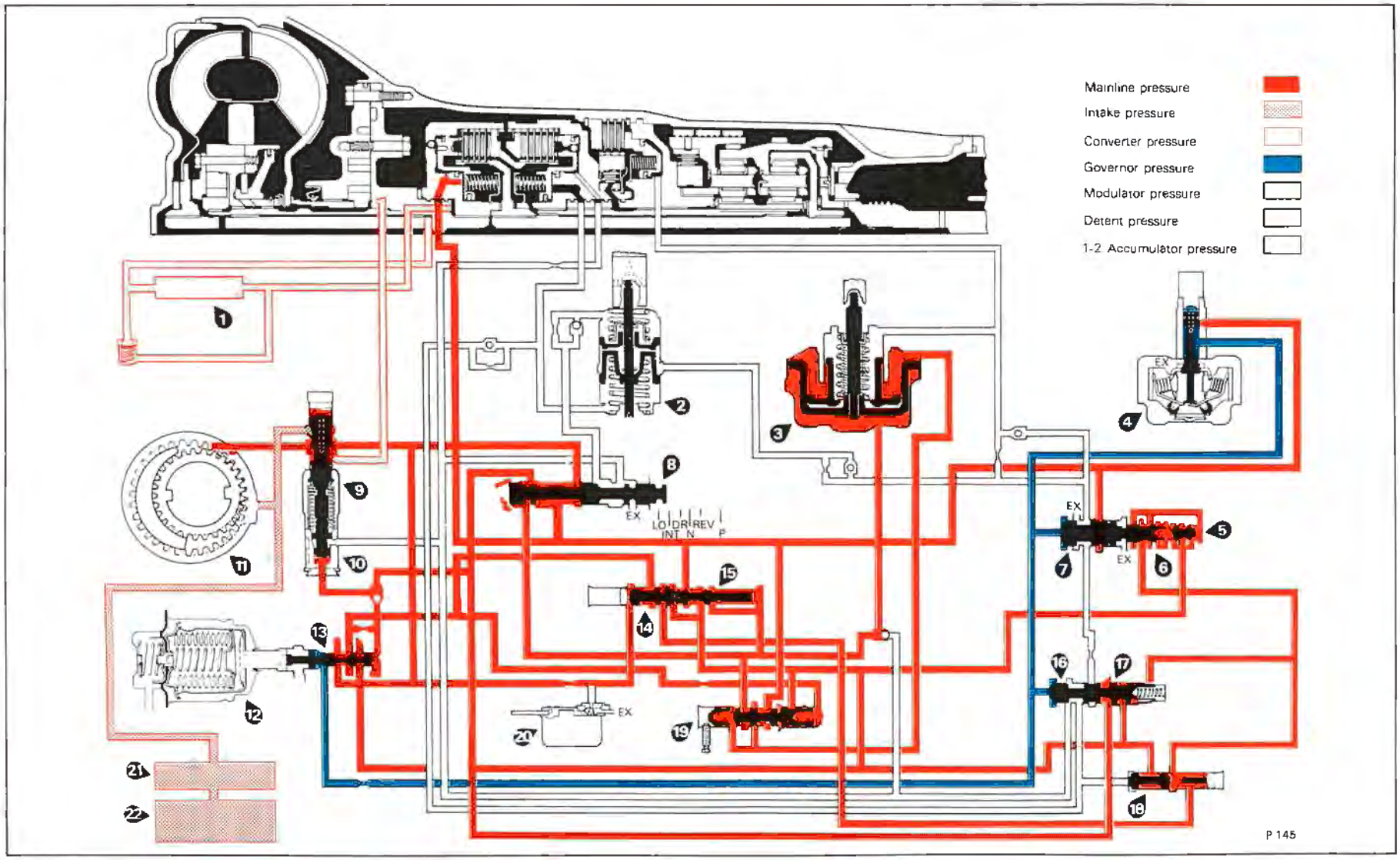

Fig. T10 Low range - 1st gear

1 Heat exchanger
2 Front servo
3 Rear servo
4 Governor assembly
5 Regulator plug
6 1-2 detent valve
7 1-2 valve
8 Manual valve
9 Pressure regulator
10 Boost valve
11 Pump
12 Vacuum modulator
13 Modulator valve
14 Detent valve
15 Regulator valve
16 2-3 valve
17 2-3 modulator valve
18 3-2 valve
19 1-2 accumulator valve
20 Detent solenoid
21 Oil strainer
22 Sump

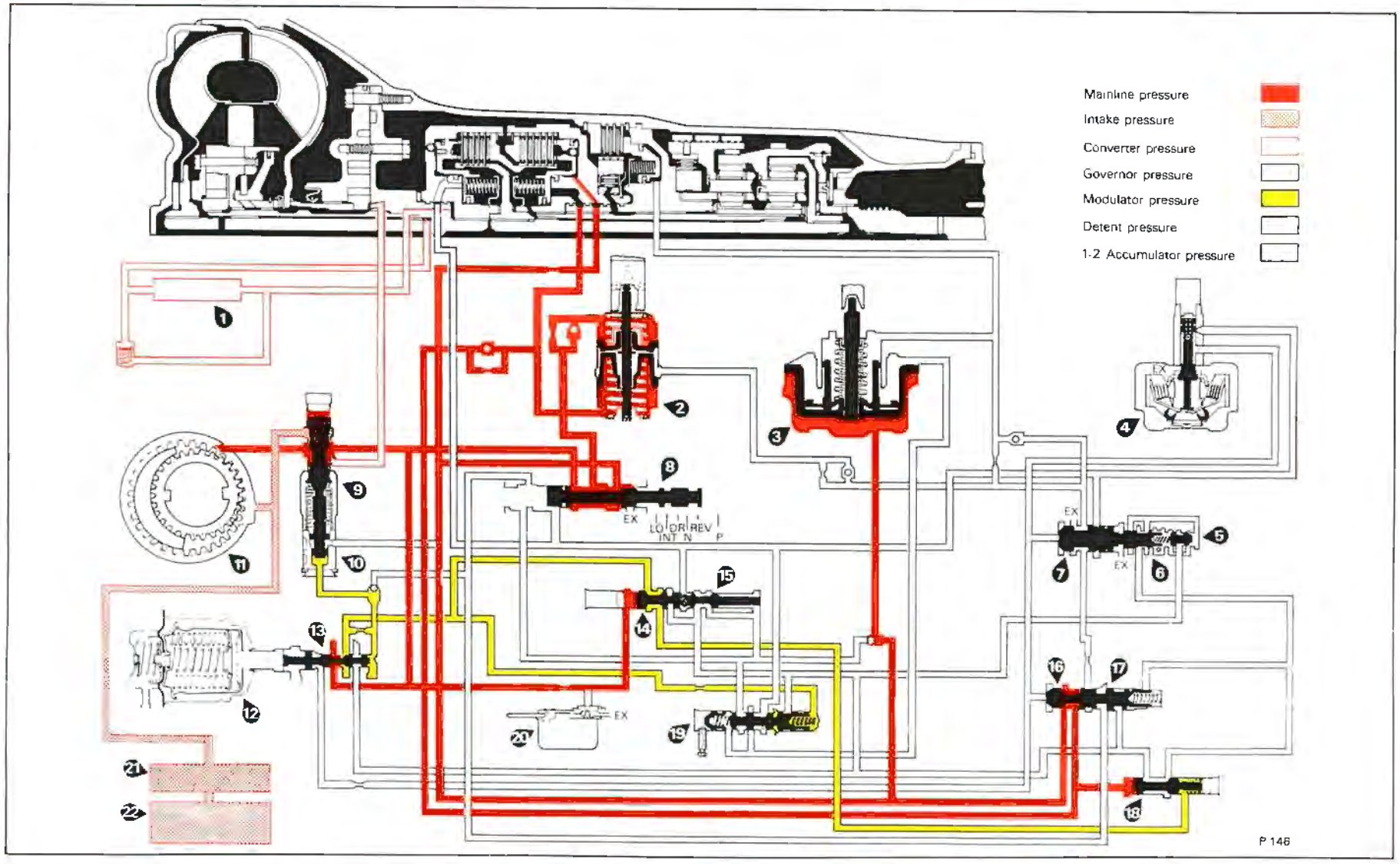

Fig. T11 Reverse

1 Heat exchanger
2 Front servo
3 Rear servo
4 Governor assembly
5 Regulator plug
6 1-2 detent valve
7 1-2 valve
8 Manual valve
9 Pressure regulator
10 Boost valve
11 Pump
12 Vacuum modulator
13 Modulator valve
14 Detent valve
15 Regulator valve
16 2-3 valve
17 2-3 modulator valve
18 3-2 valve
19 1-2 accumulator valve
20 Detent solenoid
21 Oil strainer
22 Sump

© Rolls-Royce Motors Limited 1980
Printed in England

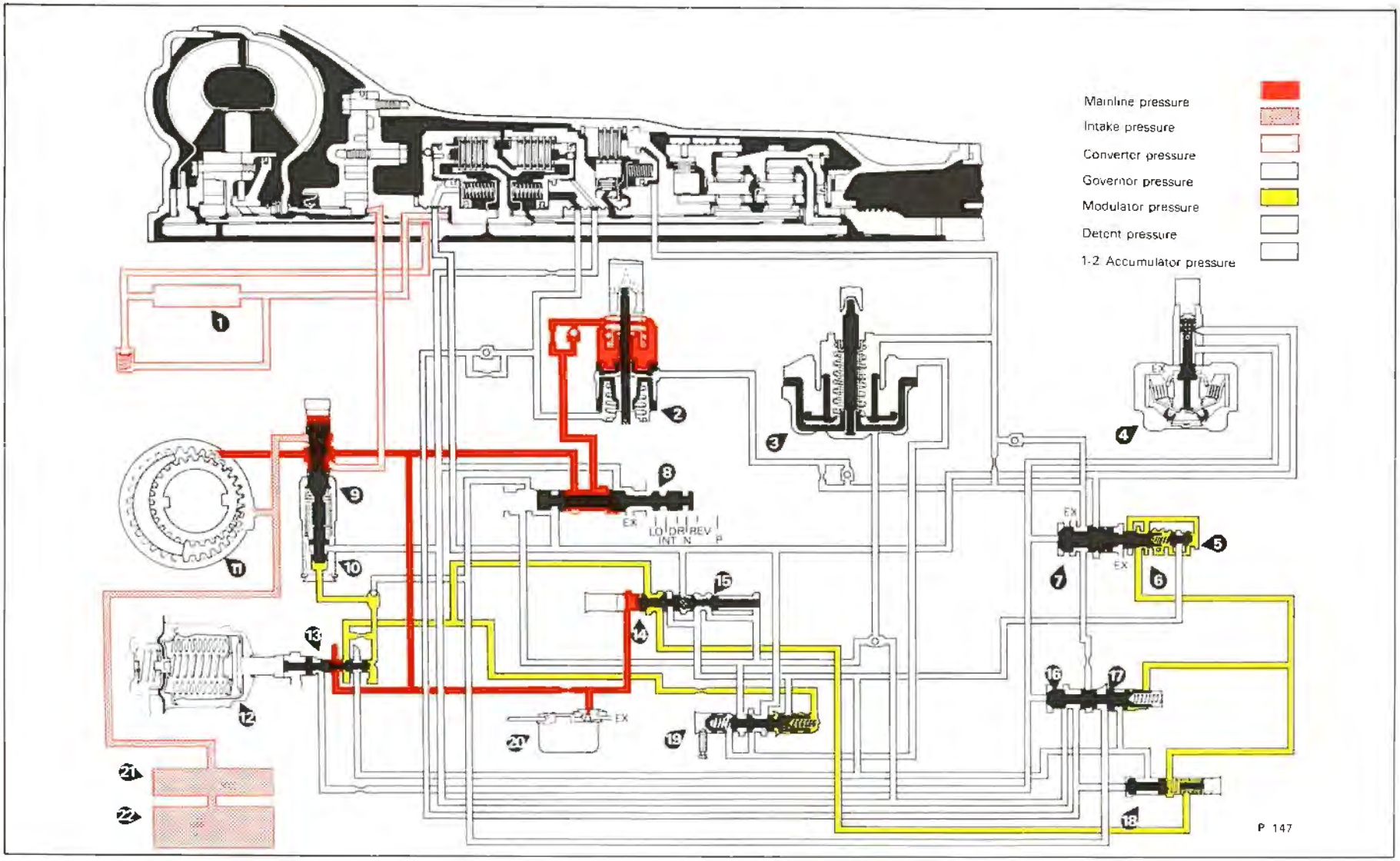

Fig. T12 Neutral – Engine running

1 Heat exchanger
2 Front servo
3 Rear servo
4 Governor assembly
5 Regulator plug
6 1-2 detent valve
7 1-2 valve
8 Manual valve
9 Pressure regulator
10 Boost valve
11 Pump
12 Vacuum modulator
13 Modulator valve
14 Detent valve
15 Regulator valve
16 2-3 valve
17 2-3 modulator valve
18 3-2 valve
19 1-2 accumulator valve
20 Detent solenoid
21 Oil strainer
22 Sump

Oil flow
As the car speed and the governor pressure increases, the force of governor oil acting on the 1-2 shift valve will overcome the force of regulated modulator oil pressure. This allows the 1-2 shift valve to open, permitting drive oil to enter the intermediate clutch passage.

Intermediate clutch oil from the 1-2 shift valve is directed to the following (see Fig. T5):
Intermediate clutch
Rear servo
Front servo and accumulator pistons
2-3 Shift valve

Basic control
Intermediate clutch oil from the 1-2 shift valve seats a one-way check ball and flows through an orifice to the intermediate clutch piston to apply the intermediate clutch. At the same time, intermediate clutch oil moves the accumulator piston against the 1-2 accumulator oil and accumulator spring to maintain lower pressure in the clutch during a 1-2 shift for a smooth clutch application. Intermediate clutch oil seats a second one-way check ball and flows to the front servo and accumulator pistons. Intermediate clutch oil is also directed to a land of the 2-3 shift valve.

Summary
The forward and intermediate clutches are applied. The transmission is in second gear.

Drive - Third gear

Power flow
Forward clutch - applied. Direct clutch - applied. Intermediate clutch - applied. Roller clutch - ineffective. Front band - released. Intermediate roller clutch - ineffective. Rear band - released.

In direct drive, engine torque is transmitted from the converter, through the forward clutch to the mainshaft and rear internal gear. Because the direct clutch is applied, equal power is also transmitted to the sun gear shaft and the sun gear. Since both sun gear and internal gears are now turning at the same speed, the planetary gear set is essentially locked and turns as one unit in direct drive or a ratio of 1 : 1.

Oil flow
As car speed and governor pressure increase, the force of governor oil acting on the 2-3 shift valve overcomes the force of 2-3 shift valve spring and modulator oil. This allows the 2-3 shift valve to move, feeding intermediate clutch oil to the direct clutch passage.

Direct clutch oil from the 2-3 shift valve is directed to the following (see Fig. T6):
Direct clutch
Front accumulator piston
3-2 Valve

Basic control
Direct clutch oil from the 2-3 shift valve flows past a one-way check valve to the inner area of the direct clutch piston to apply the direct clutch. Simultaneously, direct clutch oil is fed to the front accumulator piston. Pressure of the direct clutch oil, combined with the accumulator spring, moves the accumulator and servo pistons against servo oil. This acts as an accumulator for a smooth direct clutch application.

Direct clutch oil is supplied also to the 3-2 valve to move the valve against modulator pressure. This cuts off modulator oil to the 1-2 regulator and 2-3 modulator valves and allows the transmission to utilize the torque multiplying characteristics of the converter during medium throttle operation without down-changing.

Summary
The forward, intermediate and direct clutches are applied. The transmission is in third gear (direct drive).

Part throttle down-change

Power flow
Forward clutch - applied. Direct clutch - released in second. Direct clutch - applied in third. Intermediate clutch - applied. Roller clutch - ineffective. Front band - released. Intermediate roller clutch - effective in second. Intermediate roller clutch - ineffective in third. Rear band - released.

In second gear, the intermediate clutch is applied to allow the intermediate roller clutch to hold the sun gear against anti-clockwise rotation. Turbine torque through the forward clutch is then applied clockwise through the mainshaft to the rear internal gear.

Clockwise rotation of the rear internal gear turns the rear pinions clockwise against the stationary sun gear. This causes the output shaft and output carrier to turn clockwise in a reduction ratio of approximately 1.5 : 1.

Oil flow
A part throttle 3-2 down-change can be accomplished below approximately 53 k.p.h. (33 m.p.h.) by depressing the accelerator far enough to raise modulator pressure to approximately 6,1 kgf.sq.cm. (87 lbf.sq.in.). Modulator pressure and the 3-2 valve spring will move the 3-2 valve against direct clutch oil and allow modulator oil to act on the 2-3 modulator valve. This moves the 2-3 valve train against governor oil and changes the transmission to second gear (see Fig. T7).

Detent down-change

Power flow
Forward clutch - applied. Direct clutch - released in second. Direct clutch - applied in third. Intermediate

clutch - applied. Roller clutch - ineffective. Front band - released. Intermediate roller clutch - effective in second. Intermediate roller clutch - ineffective in third. Rear band - released.

In second gear, the intermediate clutch is applied to allow the intermediate roller clutch to hold the sun gear against anti-clockwise rotation. Turbine torque through the forward clutch is then applied clockwise through the mainshaft to the rear internal gear.

Clockwise rotation of the rear internal gear turns the rear pinions clockwise against the stationary sun gear. This causes the output carrier and output shaft to turn clockwise in a reduction ratio of approximately 1.5 : 1.

Oil flow

While operating at speeds below approximately 113 k.p.h. (70 m.p.h.) a forced or detent 3-2 down-change is possible. The down-change is effected by depressing the accelerator pedal so that the kick-down button is depressed and the kick-down switch actuates the detent solenoid. The detent solenoid opens an orifice that allows line oil at the detent valve to be exhausted, thus permitting the detent regulator valve to operate. Line oil acting on the detent valve and solenoid is supplied by a small orifice.

Drive oil on the detent regulator valve is then regulated to a pressure of approximately 4,9 kgf.sq. cm. (70 lbf.sq.in.) and called detent oil. Detent oil is then routed to the following (see Fig. T8):

Modulator passage
1-2 Regulator valve
2-3 Modulator valve
3-2 Valve
1-2 Primary accumulator valve
Vacuum modulator valve

Detent oil in the modulator passage and at the 2-3 modulator valve will close the 2-3 shift valve, changing the transmission to second gear.

A detent 2-1 down-change can also be accomplished below approximately 32 k.p.h. (20 m.p.h.) because detent oil is directed to the 1-2 regulator valve. This allows detent oil to act on the 1-2 regulator, and 1-2 detent valve to close the 1-2 shift valve, changing the transmission to first gear.

Detent oil is directed also to the modulator valve to prevent modulator pressure from regulating below 4,9 kgf.sq.cm (70 lbf.sq.in.) at high speeds or at high altitudes.

Intermediate - Second gear

Power flow

Forward clutch - applied. Direct clutch - released. Intermediate clutch - applied. Roller clutch - ineffective. Front band - applied. Intermediate roller clutch - effective. Rear band - released.

In second gear, the intermediate clutch is applied to allow the intermediate roller clutch to hold the sun gear against anti-clockwise rotation. Turbine torque through the forward clutch is now applied clockwise through the mainshaft to the rear internal gear.

Clockwise rotation of the rear internal gear turns the rear pinions clockwise against the stationary sun gear. This causes the output carrier and output shaft to turn clockwise in a reduction ratio of approximately 1.5 : 1.

In second gear, engine braking is provided by the front band as it holds the sun gear fixed. Without the band applied, the sun gear would overrun the intermediate roller clutch.

Oil flow

When the selector lever is in Intermediate range, intermediate oil from the manual valve is directed to the following (see Fig. T9):

Pressure boost valve
2-3 Shift valve

Intermediate oil at the boost valve will increase line pressure to 10,5 kgf.sq.cm. (150 lbf.sq.in.). This increased intermediate oil pressure at the 2-3 shift valve will close the 2-3 shift valve, regardless of car speed.

For engine braking the front band is applied by exhausting servo oil at the manual valve. This allows intermediate clutch oil, acting on the servo piston, to move the piston and apply the front band. Once the transmission is in second gear - Intermediate range, it cannot change to third gear regardless of car speed.

Summary

The forward and intermediate clutches and front band are applied. The transmission is in second gear - Intermediate range.

Low range - First gear

Power flow

Forward clutch - applied. Direct clutch - released. Intermediate clutch - released. Roller clutch - effective. Front band - released. Intermediate roller clutch - ineffective. Rear band - applied.

With the selector lever in Low range, the forward clutch is applied. This delivers turbine torque to the mainshaft and turns the rear internal gear clockwise. (Converter torque ratio is approximately 2.0 : 1 at stall.)

Clockwise motion of the rear internal gear causes the rear pinions to turn clockwise to drive the sun gear anti-clockwise. In turn, the sun gear drives the front pinions clockwise, thus turning the front internal gear, output carrier and output shaft clockwise in a reduction ratio of approximately 2.5 : 1. The reaction of the front pinions against the front internal gear is taken by the reaction carrier and roller clutch assembly to the transmission case. (Total stall ratio is approximately 5 : 1.)

Downhill or overrun braking is provided in Low range by applying the rear band as this prevents the reaction carrier from overrunning the roller clutch.

Printed in England
© Rolls-Royce Motors Limited 1980

Oil flow
Maximum downhill braking can be attained at speeds below 64 k.p.h. (40 m.p.h.) with the selector lever in Low position as this directs Low oil from the manual valve to the following (see Fig. T10):
Rear servo
1-2 Accumulator valve
Detent regulator valve
1-2 Shift valve

Basic control
Low oil flows past a check ball to the apply side of the rear servo piston and to the 1-2 accumulator valve to raise the 1-2 accumulator oil to line pressure for a smooth band application.

Low oil acts on the detent regulator valve. Combined with the detent spring, Low oil holds the detent valve against line oil acting on the detent valve, causing drive oil to flow through the detent regulator valve into the detent and modulator passages. Modulator and detent oil at line pressure acting on the 1-2 regulator and 1-2 detent valve overcomes governor oil and Low oil on the 1-2 shift valve at any vehicle speed below approximately 64 k.p.h. (40 m.p.h.) and the transmission will change to first gear.

In first gear - Low range, the transmission cannot up-change to second gear regardless of car or engine speed.

Summary
The forward clutch and rear band are applied. The transmission is in first gear - Low range.

Reverse

Power flow
Forward clutch - released. Direct clutch - applied. Intermediate clutch - released. Roller clutch - ineffective. Front band - released. Intermediate roller clutch - ineffective. Rear band - applied.

In Reverse, the direct clutch is applied to direct turbine torque to the sun gear shaft and sun gear. The rear band is also applied, holding the reaction carrier.

Clockwise torque to the sun gear causes the front pinions and front internal gear to turn anti-clockwise in reduction. The front internal gear is connected directly to the output shaft, thus providing the reverse output gear ratio approximately 2 : 1. The reverse torque multiplication at stall (converter and gear ratios) is approximately 4 : 1.

Oil flow
When the selector lever is moved to the Reverse position, the manual valve is repositioned to allow oil at line pressure to enter the reverse circuit. Reverse oil then flows to the following (see Fig. T11):
Direct clutch
2-3 Shift valve
Rear servo piston
Pressure boost valve

Basic control
Reverse oil from the manual valve flows to the large area of the direct clutch piston and to the 2-3 shift valve. From the 2-3 shift valve, it enters the direct clutch passage and is directed to the small area of the direct clutch piston to apply the direct clutch.

Reverse oil flows to the rear servo and acts on the servo piston to apply the rear band. Reverse oil acts also on the pressure boost valve to boost line pressure.

Summary
The direct clutch and the rear band are applied. The transmission is in Reverse.

Park or Neutral - Engine running

Power flow
Forward clutch - released. Direct clutch - released. Intermediate clutch - released. Roller clutch - ineffective. Front band - released. Intermediate roller clutch - ineffective. Rear band - released.

In Neutral or Park no bands or clutches are applied therefore no power is transmitted.

Oil flow
Whenever the engine is running at idle with the selector lever in 'P' or 'N', oil from the pump is directed to the following (see Fig. T12):

Pressure regulator valve	Manual valve
Torque converter	Detent valve
Oil cooler	Detent solenoid
Oil cooler by-pass valve	Vacuum modulator valve
Lubrication system	Front servo (Neutral only)

Cooling and lubrication
Oil flows from the pump to the pressure regulator valve which regulates pump pressure. When the pump output exceeds the demand of line pressure, oil from the pressure regulator is directed to the converter feed passage to fill the converter. Oil from the converter is directed to the transmission heat exchanger by-pass valve. Oil from the heat exchanger is directed to the transmission lubrication system.

The heat exchanger by-pass valve permits oil to be fed directly from the converter to the lubrication circuits if the heat exchanger becomes restricted.
Line pressure acts on the following:
Manual valve
Detent valve
Detent solenoid
Modulator valve

Line pressure at the modulator valve is regulated to a pressure called modulator oil, which acts on the pressure boost valve, 1-2 accumulator and primary valves, and passes through the detent valve and the 3-2 valve to the 1-2 and 2-3 valve trains.

Summary
The torque converter is filled, and all clutches and bands are released. The transmission is in Neutral.

Section T2

Servicing

Printed in England

Careful and regular maintenance of the transmission is necessary to ensure maximum reliability; the following table gives the recommended servicing periods.

Servicing periods

Essential maintenance	Period
Check the fluid level	After first 5 000 kilometres (3 000 miles) then every 10 000 kilometres (6 000 miles)
Change transmission fluid	20 000 kilometres (12 000 miles)
Change transmission fluid and fit a new intake strainer. Renew 'O' ring on intake pipe and fit a new seal to bore of intake strainer	40 000 kilometres (24 000 miles)
Additional maintenance	**Period**
Lubricate control linkage. Road test for satisfactory performance	Every 10 000 kilometres (6 000 miles)

© Rolls-Royce Motors Limited 1980

It is absolutely essential that great attention be paid to cleanliness whenever the interior of the transmission is exposed and when work is being carried out on a particular unit belonging to the transmission. The smallest particle of dirt in the oil may interfere with the correct operation of the valves, particularly in the control valve unit.

Fluid level - To check and top-up

The fluid level in the torque converter transmission can be checked accurately only when the car is standing on a level surface, the engine is running and the transmission fluid is at normal operating temperature, approximately 77°C. (170°F.).

As an initial check, the fluid level may be checked after starting from cold, running the engine for 3 to 4 minutes when the fluid level should be approximately 4 cm. (1.5 in.) below the 'MAX' mark on the dipstick.

A further check should then be carried out as follows.

1. Drive the car for approximately 32 kilometres (20 miles). This will ensure that the transmission has reached normal operating temperature.
2. Position the car on a level surface, firmly apply the parking brake and select 'Park' postion, with the gear range selector lever.
3. Remove the gear change actuator thermal cut-out from the main fuseboard to ensure against accidental gear selection.
4. Run the engine at fast idle speed for approximately 3 minutes, then reduce to slow idle; check the fluid level.
5. With the engine running, add fluid as required to bring to the required level, 'MAX' mark on the dipstick.

Note

Do not overfill.

6. Replace the gear change actuator thermal cut-out in the fuseboard.

For a complete list of the lubricants currently approved for use in this transmission refer to Chapter D.

Transmission dipstick and filler tube

The transmission dipstick and filler tube are situated on the right-hand side of the engine, close to the bulkhead, and the word GEARBOX is stamped on the top of the dipstick (see Fig. T13).

To drain the sump and renew the intake strainer

1. Position the car on a ramp.
2. Place a clean container, minimum capacity 3 litres (5 Imp. pints, 6 U.S. pints) under the nut which secures the filler tube to the side of the sump (see Fig. T14).
3. Withdraw the transmission dipstick from inside the engine compartment, and slacken the setscrews securing the filler tube clip to the cylinder head.
4. Slacken the nut securing the dipstick filler tube to the right-hand side of the transmission sump; withdraw and move to one side the filler tube and drain the fluid into the container. Discard the 'O' ring (if fitted) from the filler tube connection.
5. Remove the setscrews securing the sump.
6. Remove the sump and discard the gasket.
7. Drain the remainder of the fluid from the sump.
8. Clean the sump with paraffin and dry with compressed air.
9. Unscrew and remove the stepped bolt securing the intake pipe and strainer assembly to the transmission casing; remove the strainer assembly.
10. Discard the intake strainer but retain the intake

February 1980
TSD 4200

pipe which connects the strainer to the casing.
11. Fit a new rubber 'O' ring onto the intake pipe, lubricate the 'O' ring with transmission fluid.

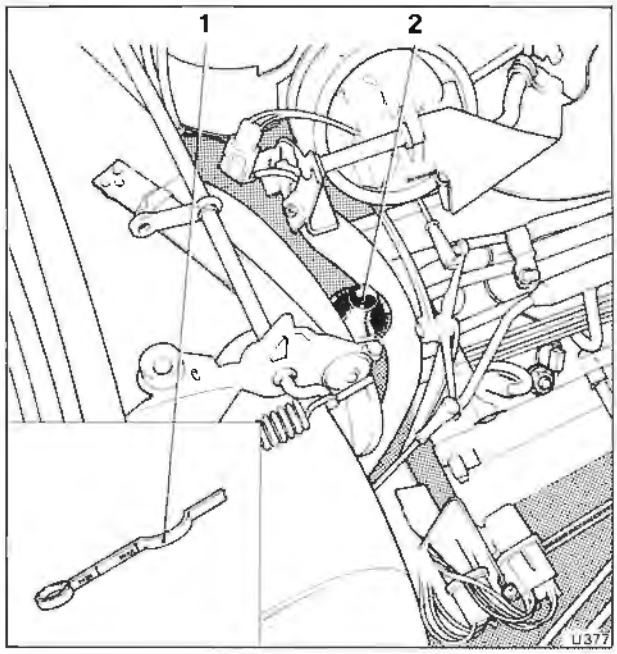

Fig. T13 Checking the oil level
1 Minimum and Maximum oil level marks
2 Transmission oil dipstick

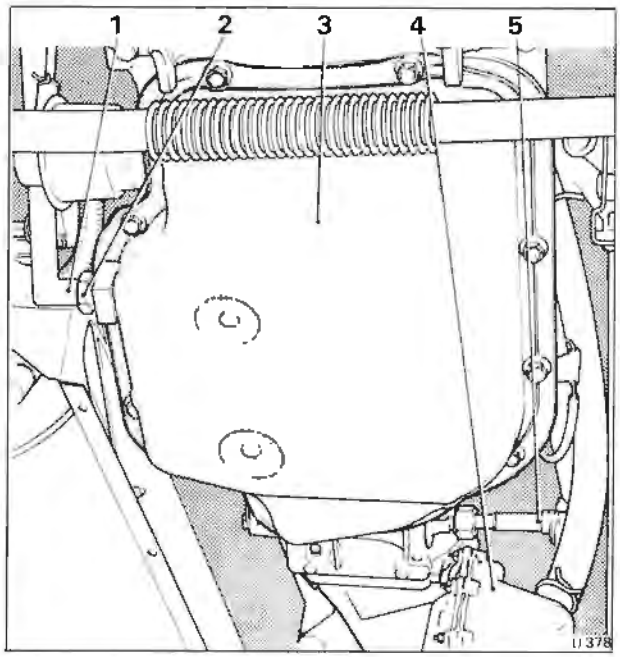

Fig. T14 Transmission sump
1 Fluid filler tube
2 Fluid drain point
3 Sump
4 Gear change actuator
5 Electronic impulse transmitter

12. Ensure a new rubber seal is fitted to the bore in the new intake strainer then fit the strainer to the intake pipe and secure the strainer with the stepped bolt.
13. Fit the sump, using a new gasket. Torque tighten the setscrews (refer to Chapter P).
14. Fit the oil filler tube and tighten the nut; tighten the filler tube securing clip to the cylinder head.
15. Add 4½ litres (8 Imp. pints, 9½ U.S. pints) of an approved fluid (see Chapter D) to the sump, pouring the fluid down the dipstick filler tube.

Note
When draining the sump but **not** renewing the intake strainer, add only 2,8 litres (5 Imp. pints, 6 U.S. pints).

16. Place the gear range selector lever in the 'Park' position, and run the engine at fast idle speed for approximately 1½ minutes.
17. Reduce the engine speed to slow idle and check the fluid level; this should be approximately 16 mm. (0.625 in.) **below** the 'MIN' mark on the dipstick when the transmission is cold, i.e. 20°C. (68°F.) or below. If necessary add sufficient fluid to bring the fluid level to 16 mm. (0.625 in.) below the 'MIN' mark on the dipstick.
Note
Do not overfill, as foaming may occur when the fluid warms up. If the fluid level is too low, especially when cold, complete loss of drive may result after quick stops. Extremely low fluid levels will result in damage to the transmission.
18. Finally, check the transmission fluid level is correct (see Fluid level - To check and top-up, operations 1 to 6 inclusive).

Transmission unit (dry) - To fill
The fluid capacity of the torque converter transmission, including the torque converter, is approximately 10,6 litres (18 2/3 Imp. pints, 22½ U.S. pints), but the correct level is determined by the marks on the dipstick rather than by the quantity of fluid added. It is important that the correct level be maintained. When the transmission has been overhauled or a new one fitted and a complete fill is required, including the torque converter, proceed as follows.
1. Pour approximately 6,5 litres (11½ Imp. pints, 14 U.S. pints) through the filler tube.
2. Run the engine at a fast idle speed for approximately 1½ minutes with the gear range selector lever in the 'Park' position.
3. Reduce the engine speed to slow idle and check the fluid level; if necessary, add fluid to bring the level to approximately 16 mm. (0.625 in.) **below** the 'MIN' mark on the dipstick when the transmission is cold 20°C. (68°F.).
4. Drive the car for approximately 32 kilometres (20 miles) then check the fluid level, top-up to the 'MAX' mark if necessary as described in Fluid level - To check and top-up.

The transmission sump should be drained every 20 000 kilometres (12 000 miles) or 12 months, whichever occurs first. Fresh fluid should be added to maintain the correct level on the dipstick.

The fluid intake system incorporates an intake strainer. This strainer should be renewed after the first 40 000 kilometres (24 000 miles) or two years, whichever occurs first. In the event of a major failure in the transmission, the strainer must be renewed.

Transmission unit - To check for leaks

Whenever the transmission has been dismantled, completely or partially, the following procedure must be observed to minimise the possibility of fluid leakage.

1. Always fit new gaskets and 'O' ring seals.
2. Use a small amount of petroleum jelly to hold a gasket in position during assembly.
3. Do not use a sealing compound (e.g. Wellseal) with a gasket.
4. Ensure that the cork and paper gaskets are not wrinkled or creased when fitted, or have shrunk or stretched during storage.
5. Ensure that the square-sectioned 'O' rings are correctly fitted and are not twisted.
6. Ensure that all mating faces are clean and free from burrs and damage.
7. Torque tighten bolts, setscrews etc., to the torque figures given in Chapter P.

When examining the transmission for leaks, determine whether the fluid originates from the transmission or the engine. The original factory fill fluid is red in colour, this assists in locating the source of leakage. If however, the colour cannot be detected in the transmission fluid, add a red aniline dye preparation to the fluid. Red dye appearing in the leaking fluid will positively identify the source of the leak.

If the fluid is known to be leaking from the transmission, examine the following areas.

Front end

It will be necessary to remove the bell housing bottom cover and the lower front cover plate in order to examine the transmission for leakage at the front end.

To correct a leak at the front end the transmission will have to be removed from the car.

1. If the pump oil seal is suspected of leaking fluid, ensure that the seal has been correctly fitted and is not damaged.

When fitting a new seal (see Section T16) ensure that the seal bore in the case is clean and that the seal garter spring is fitted. Examine the finish on the converter neck and the bearing surface in the pump body.

2. Examine the pump square-sectioned 'O' ring and the gasket for damage, renew if necessary.
3. Ensure that the rubber coated washers on the pump securing setscrews are correctly fitted and are not damaged.
4. Examine the torque converter for leakage (see Section T7).

Rear Extension

1. Examine for damage the rear extension housing oil seal.
2. Examine the finish on the sliding coupling.
3. Ensure that the gasket fitted between the joint faces has been correctly fitted and is not damaged.
4. Check the securing setscrews for correct torque tightness (see Chapter P).
5. Examine the housing for cracks or porosity.

Transmission case

1. Examine the speedometer electronic impulse transmitter drive 'O' ring and lip-type seal. Ensure that the securing setscrew is torque tightened.
2. Examine the governor cover gasket. Ensure that the setscrews are torque tightened.
3. Examine the electrical connector 'O' ring for damage.
4. Examine the parking pawl shaft 'O' ring for damage.
5. Examine the manual shaft 'O' ring for damage.
6. Examine the vacuum modulator 'O' ring for damage. Ensure the retaining setscrew is torque tightened.
7. Examine the vacuum modulator for possible damage to the diaphragm.

Note

If the transmission is found to be consistently low on fluid, check the modulator to make certain there is no split in the diaphragm. Apply suction to the vacuum tube and check for leaks. A split diaphragm would allow transmission fluid to be drawn into the engine induction manifold and vacuum line. This condition can usually be detected because the exhaust will be excessively smokey due to the transmission fluid being added to the combustion mixture.

8. Examine the sump gasket. Check the torque tightness of the securing setscrews.
9. Check the torque tightness of the main line pressure tapping plug.
10. Examine the breather pipe for damage.
11. Ensure that the transmission has not been overfilled.
12. Check for coolant in the transmission fluid.
13. Examine the case for cracks or porosity.
14. Ensure that the pump to case gasket is not incorrectly positioned.
15. Ensure that foreign matter is not between the pump and case, or between the pump cover and body.
16. Ensure that the breather hole in the pump cover is not obstructed.
17. Ensure that the 'O' ring on the filter assembly is not cut.

Printed in England
© Rolls-Royce Motors Limited 1980
February 1980
TSD 4200

Heat exchanger connections
Ensure that the heat exchanger transmission fluid pipes are correctly fitted and are not damaged. Ensure that the nuts are tight.

Dipstick and filler tube
Examine the flared end of the dipstick and filler tube for cracks or damage. Examine the spherical seat in the sump. Ensure that the sleeve nut is tightened sufficiently to nip the tube securely to the sump.

Internal leaks
It will be necessary to remove the sump in order to determine the source of internal leaks.
1. Check the governor pipes for security and damage.
2. Examine the rear servo cover gasket for damage. Ensure the square sectioned 'O' ring is fitted correctly and is not damaged. Torque tighten the cover securing setscrews.
3. Examine the control valve unit assembly and oil guide plate gaskets. Check the torque tightness of the unit securing setscrews.
4. Examine the solenoid gaskets for damage. Check the torque tightness of the solenoid securing setscrews.
5. Examine the intake pipe 'O' ring for damage.
6. Check that the case valve body mounting face is not distorted.

Control joints - To lubricate
During initial assembly, the clevis pins in the control linkage are lubricated with Rocol MTS 1000 grease and should be similarly treated whenever they are removed.

When a car is being serviced, the opportunity should be taken to check the controls for correct operation and to lubricate all the control joints with a few drops of engine oil.

Manual shaft - To lubricate
As part of the normal controls maintenance procedure, it is recommended that the manual shaft be lubricated with a few drops of oil at the point where it enters the transmission case.

Section T3

Testing

Printed in England

Before road testing the car to check the functioning of the transmission, carry out the following checks.

The car can then be road tested, using all the selector ranges. Note when any operating faults occur. Check the gearchange pattern as follows.

1. Check the fluid level, top-up if necessary.
2. Ensure that the engine and transmission are at normal operating temperature 77°C. (170°F.).
3. Ensure that the gearchange actuator is operating satisfactorily.
4. Check the operation of the kick-down switch, adjust if necessary (see Chapter K).
5. If the oil pressure is to be checked, fit a gauge.

Gearchange pattern check

Drive range

1. Select 'D' range, then accelerate the car from standstill.
2. A 1-2 and a 2-3 up-change should occur at all throttle openings.

Note

The change points will vary according to throttle opening.

3. As the speed of the car decreases to a stop, the 3-2 and the 2-1 down-changes should occur.

Intermediate range

1. Select 'I' range.
2. Accelerate the car from standstill.
3. A 1-2 up-change should occur at all throttle openings.
4. A 2-3 up-change cannot be obtained in this range.
5. The 1-2 up-change point will vary according to throttle opening.
6. As the speed of the car decreases to a stop, the 2-1 down-change should occur.

Low range

1. Select 'L' range.
2. No up-change should occur in this range, regardless of throttle opening.

2nd. gear overrun braking

1. Select 'D' range.
2. When a speed of approximately 56 k.p.h. (35 m.p.h.) has been reached, move the selector lever to the 'I' range position.
3. The transmission should change down to 2nd gear.
4. An increase in the speed of the engine as well as an engine braking effect should be observed.
5. Line pressure should change from between 4,22/6,32 kgf/sq.cm. (60/90 lbf/sq.in.) to approximately 10,54 kgf/sq.cm. (150 lbf/sq.in.).

1st gear - downhill or overrun engine braking

1. Select 'I' range.
2. When the speed of the car is approximately 48 k.p.h. (30 m.p.h.) [ensure that it does not exceed 64 k.p.h. (40 m.p.h.)] and at constant throttle, move the selector to 'L' range.
3. An increase in engine r.p.m. and a braking effect should be noticed as the down-change occurs.

Oil pressure - To check

Before attempting to check oil pressure or to road test the car, always ensure that the level of fluid in the transmission is correct (see Section T2).

The pressure can be checked with the transmission in the car by using an oil pressure gauge coupled to the main line tapping in the left-hand side of the transmission case.

1. Clean any dirt from around the line pressure plug; remove the plug.
2. Fit the adapter RH 7914 into the main line tapping; tighten the adapter.
3. Screw a pressure gauge, capable of reading between 0 kgf/sq.cm. and 21,09 kgf/sq.cm. (0 lbf/sq.in. and 300 lbf/sq.in.) onto the adapter then position the gauge so that it can be seen from the driver's seat.
4. Connect a tachometer to the engine; this will enable the gear change points to be positively identified.
5. Drive the car until the transmission has reached normal operating temperature 77°C. (170°F.).
6. Check the fluid level, top-up if necessary.

The following checks may be carried out during road test.

Engine idle pressure check

1. Select 'D' range then drive the car at approximately 48 k.p.h. (30 m.p.h.) with the throttle eased back. The line pressure should be 4,92 kgf/sq.cm. (70 lbf/sq.in.).
2. Select 'I' range then drive the car to obtain a steady road speed 40 k.p.h. (25 m.p.h.). Line pressure should be between 10,19 kgf/sq.cm. and 10,89 kgf/sq.cm. (145 lbf/sq.in. and 155 lbf/sq.in.).

Full throttle pressure check

1. Jack up the rear of the car and position blocks so that the rear wheels are clear of the ground.

© Rolls-Royce Motors Limited 1980

August 1980
TSD 4200

2. Disconnect the vacuum line at the induction manifold.
3. Blank off the orifice in the manifold.
4. Run the engine at fast-idle (between 800 r.p.m. and 1 000 r.p.m.) in Neutral. The oil pressure should be 10,20 kgf/sq.cm. (145 lbf/sq.in.).
5. Repeat the procedure in Reverse. Reverse pressure should be between 10,19 kgf/sq.cm. and 10,89 kgf/sq.cm. (145 lbf/sq.in. and 155 lbf/sq.in.).
6. Connect the vacuum pipe.

Towing

The car must not be towed if any mechanical damage to the transmission components is suspected, or if the torque converter transmission fluid is low.

Before towing, check the fluid level in the transmission. The level must be **above** the 'MAX' mark on the dipstick when the engine is **not running.**

Should it be necessary to tow the car, even for a short distance, a solid tow bar must be used. This is important, as without the engine running to maintain the pressure in the hydraulic systems, the efficiency of the braking systems is reduced.

If the pressure in the hydraulic systems has been exhausted by operating the footbrake pedal without the engine running, the footbrake would not stop the car. If a solid tow bar is not available, the car must be transported.

Always tow the car with the torque converter transmission in Neutral.

To select Neutral it is first necessary to insert the ignition key in the switchbox and turn it to the OFF position. Providing the battery is in a charged condition, this action will energise the gearchange actuator mechanism and Neutral can then be selected by operating the gear range selector lever. Should the battery be in a discharged condition however, turning the ignition key will not energise the gearchange mechanism and operating the gear range selector lever therefore will not activate the actuator mechanism. In this event, it will not be possible to move the transmission out of the Park position and it will be necessary to disconnect the propeller shaft before the car can be towed or transported.

Normally, when the ignition key is removed from the switchbox, Park position is automatically engaged and the parking pawl locks the transmission. If it is required to remove the ignition key and still leave the car in Neutral for towing, this can be accomplished by first removing the gearchange actuator thermal cut-out from the fuseboard and then removing the key from the switchbox.

The car can only be towed for distances up to 80 kilometres (50 miles) and the maximum towing speed must not exceed 56 k.p.h. (35 m.p.h.). For greater distances the propeller shaft must be disconnected or the car must be transported.

Section T4

Removal of units

Removable units - Transmission in car

The following units can be removed from the transmission without the transmission being removed from the car.

The removal procedure for all the units is described in the appropriate section, with the exception of the pressure regulator valve, details of which are included in this section.

1. Gearchange actuator (see Section T5).
2. Neutral start and height control switches (see Section T5).
3. Vacuum modulator and valve (see Section T8).
4. Governor assembly (see Section T9).
5. Speedometer drive (see Section T10).
6. Sump, strainer and intake pipe (see Section T11).
7. Control valve unit (see Section T12).
8. Rear servo (see Section T13).
9. Detent solenoid, connector, control valve spacer and front servo (see Section T14).
10. Rear extension (see Section T15).
11. Control rods, levers and parking linkage (see Section T17).

Pressure regulator valve - To remove

The pressure regulator valve is a solid type (see Fig. T15) and must only be used in the pump cover with the squared pressure regulator boss (see Fig. T16).

Earlier pressure regulator valves had oil holes and an orifice cup plug (see Fig. T15). This type of regulator valve may be used to service either type of pump cover.

1. Run the car onto a ramp. Drain the oil from the sump.
2. Remove the sump as described in Section T11.
3. Withdraw the intake pipe and strainer assembly.
4. Remove and discard the intake pipe 'O' ring.
5. Remove the setscrew which secures the detent roller spring; remove the spring and roller.
6. Slacken the lock-nut which secures the detent lever to the manual shaft.
7. Remove the manual shaft pin from the case.
8. Remove the gearchange lever from the manual shaft.
9. Prise the detent lever from the manual shaft then remove the parking actuator rod and detent lever.
10. Ensure that the manual valve does not slide out of its bore in the control valve unit.
11. Push the manual shaft through the bore in the case in order to gain access to the pressure regulator valve bore.
12. Using a screwdriver or a steel rod, push the regulator boost valve sleeve against the pressure regulator spring (see Fig. T17).

Caution
The pressure regulator spring is under extreme pressure and will force the valve sleeve out of its

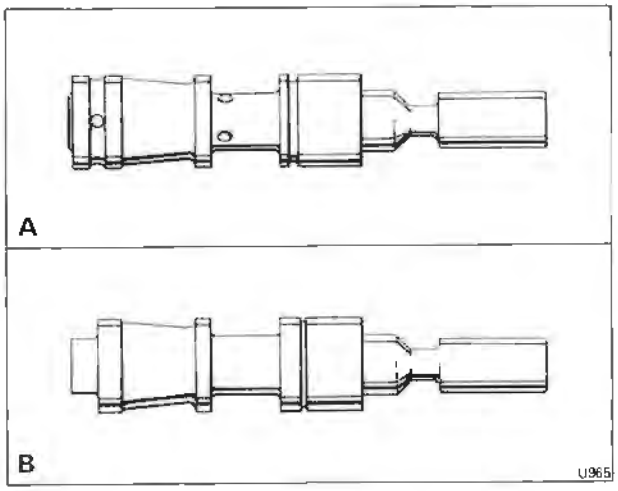

Fig. T15 Pressure regulator valve
A Early type with orifice plug
B Solid type

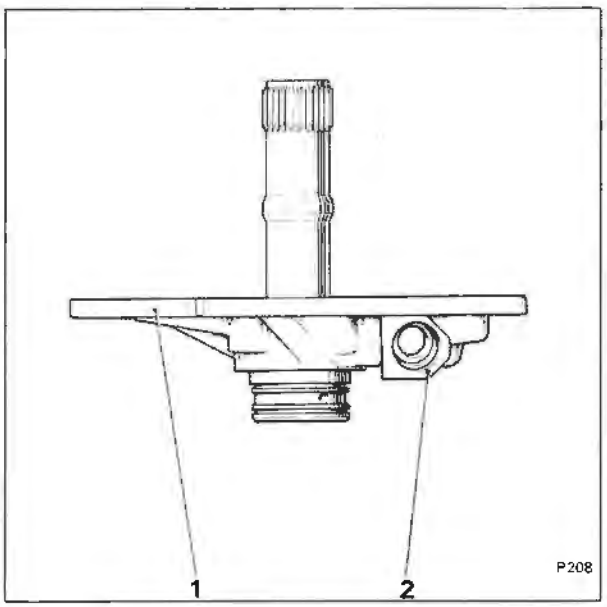

Fig. T16 Pump cover assembly
1 Pump cover
2 Pressure regulator boss

Printed in England
© Rolls-Royce Motors Limited 1980
August 1980
TSD 4200

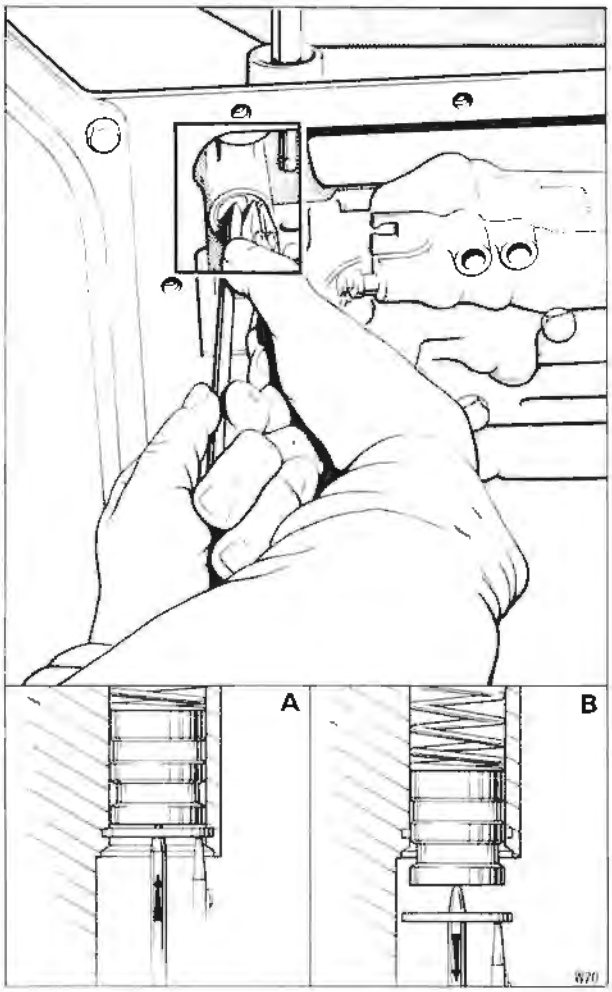

Fig. T17 Removing the pressure regulator valve
A Spring compressed
B Circlip removed

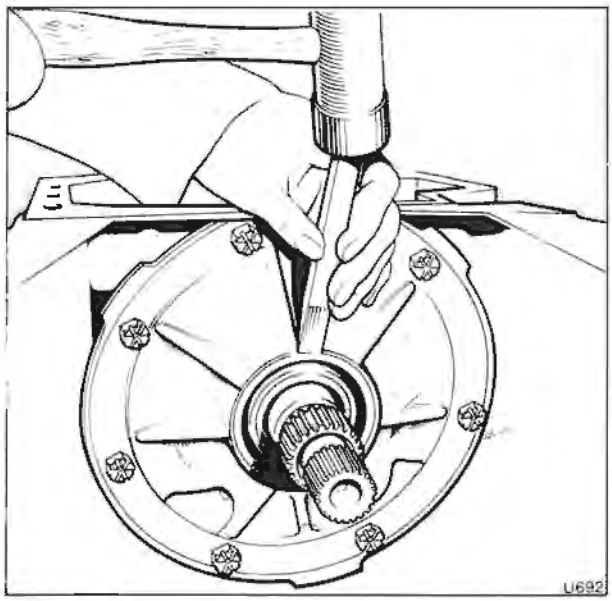

Fig. T18 Removing the oil pump seal

bore when the circlip is removed unless the sleeve is firmly held.
13. Continue to exert pressure on the valve sleeve then remove the circlip. Gradually relax the pressure on the valve sleeve until the spring pressure is released.
14. Carefully remove the regulator boost valve sleeve and valve, then withdraw the regulator spring. Take care not to drop the valves.
15. Remove the pressure regulator valve and spring retainer. Remove the spacers (if fitted).

Pressure regulator valve - To fit
Before fitting, wash and examine all parts.
1. Fit the spring retainer onto the pressure regulator spring. Fit any spacers which were previously removed.
2. Fit the pressure regulator valve, stem end first, onto the spring.
3. Fit the boost valve into the sleeve with the valve stem outward then hold together all the parts so that the pressure regulator spring is against the valve sleeve.
4. Fit the complete assembly into the pressure regulator valve bore, taking care that the parts do not fall.
5. Using a screwdriver or a steel rod, push the regulator boost valve sleeve against the regulator spring pressure until the end of the sleeve has passed beyond the circlip groove.
6. Fit the circlip then relax the pressure on the sleeve.
7. Fit the parking actuator rod and detent lever, ensuring that the rod plunger is under the parking brake bracket and over the parking pawl.
8. Slide the manual shaft into the case and through the detent lever.
9. Fit the gearchange lever.
10. Fit the lock-nut onto the manual shaft. Torque tighten the nut.
11. Ensure that the manual valve is engaging with the pin on the detent lever.
12. Retain the manual shaft with the pin. Straighten the pin to lock it into position.
13. Fit the detent spring and roller assembly;torque tighten the setscrew.
14. Fit the intake pipe and strainer assembly, also the sump as described in Section T11.
15. Top-up the transmission with an approved fluid (see Chapter D).

Oil pump seal - To renew
1. Remove the transmission from the car (see Section T6).
2. Carefully drive the point of a chisel under the lip of the seal then prise the seal out of the pump body (see Fig. T18).
3. Before fitting a new seal, ensure that the body bore is clean and free from burrs and that the garter ring is on the seal.
4. Check the finish of the converter neck and the bearing surface in the pump body.

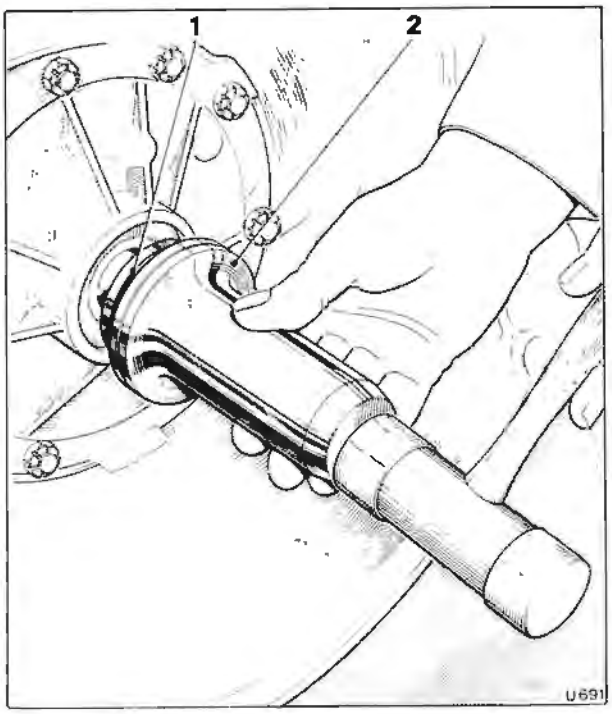

Fig. T19 Fitting the oil pump seal
1 Oil seal
2 Seal fitting tool

5. Lightly smear the outer edge of the seal case with Wellseal then fit the seal to the pump using tool RH 7953 (J-21359) as shown in Figure T19.
6. Fit the transmission to the car (see Section T6).

Printed in England
© Rolls-Royce Motors Limited 1980

Section T5

Gearchange actuator

The electric gearchange actuator (see Figs. T20 and T21) is mounted on a bracket secured to the transmission rear extension.

When the ignition is switched on and the selector lever on the steering column is moved to one of the gear range positions, current is allowed to flow to the actuator motor via a relay.

The motor rotates and turns the wormshaft through the flexible coupling. As the worm gear rotates, the slip ring which is secured to the worm gear also rotates until an insulated slot in the slip ring is aligned with the live contact. When this position is reached, the current is cut off and the motor ceases to rotate.

The electric actuator is wired such that the transmission can be locked by moving the selector lever to the Park position, with the ignition switched either on or off. However, to move the transmission out of the Park position, the ignition has to be switched on, with the battery in a charged condition.

Note
The actuator will also lock the transmission when the ignition key is removed from the switchbox.

Gearchange electric actuator - To remove
The gearchange electric actuator includes a thermal cut-out. This cut-out prevents the motor from being overloaded should the gearchange linkage become obstructed and as a result, gives the impression of actuator failure.

Before removing the actuator, ensure that the controls are free and adequately lubricated, also that the actuator electrical system is sufficiently cooled for the thermal cut-out to permit the motor to operate. Press the reset button in the main fuseboard to reset the cut-out.

It is recommended that the easiest and quickest method of dealing with actuator failure, is by substituting the faulty actuator for a service exchange unit. If a service exchange unit is not obtainable proceed as follows.

1. Disconnect the negative lead from the battery.
2. Remove the split pin and clevis pin from the actuating lever on the electric actuator; disconnect the rod from the lever.
3. Unscrew and remove the 'multi-pin' plug (see Page T5 - 9). Alternatively, from inside the car, pull the carpet to one side and disconnect the electrical plug(s) from the left-hand side of the lower facia and unclip it from the automatic air conditioning servo unit. Remove the setscrew securing the electrical cable to the transmission tunnel and also the three nuts securing the loom/breather connection. Lower the electrical lead, plug(s), etc., down through the transmission tunnel opening.
4. Remove the three bolts which secure the actuator to the rear extension bracket, then remove the actuator.

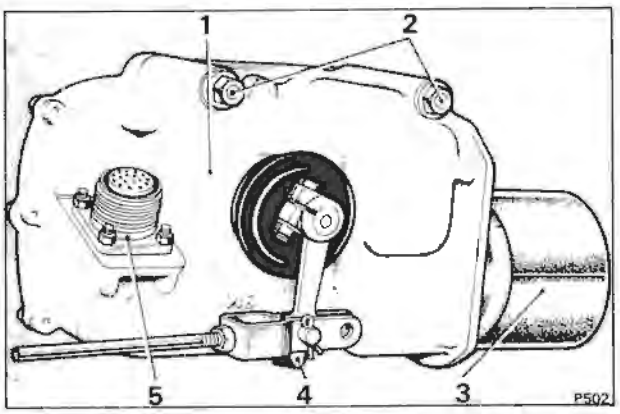

Fig. T20 Electric gearchange actuator - plug connection
1 Actuator casing
2 Actuator securing bolts
3 Motor cover
4 Actuating lever
5 Plug socket

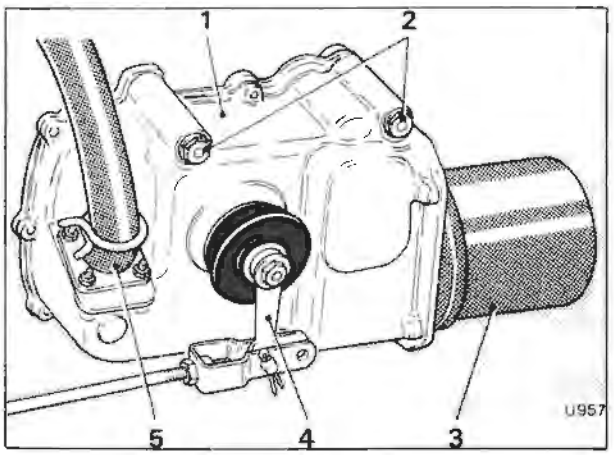

Fig. T21 Electric gearchange actuator - integral loom
1 Actuator casing
2 Actuator securing bolts
3 Motor cover
4 Actuating lever
5 Cable entry

Printed in England
© Rolls-Royce Motors Limited 1980

Gearchange electric actuator - To dismantle
Cars prior to serial numbers
34573 - Silver Shadow II
34601 - Silver Wraith II
33019 - Corniche and Camargue
1. Disconnect the transmission linkage and the actuator loom plug. Remove the actuator from the car.
2. Remove the eight 2 B.A. nuts and washers and carefully withdraw the side casing.
3. Remove the 7/16 in. A/F nut and washer and withdraw the cam noting the relative position between the cam and the output lever.
4. Disconnect all terminals on the contact plate and the micro-switches.
5. Remove the four 3 B.A. nuts and withdraw the contact plate. Remove the relay connections (see Page T5 - 9).
6. Remove the nuts and bolts which secure the micro-switches and the dual relay to the contact plate.
7. Slacken the clamping bolt and remove the output lever.
8. Remove the washer and rubber boot.
9. Remove the circlip and thrust washer.
10. Withdraw the slip ring and gear assembly from the actuator case.
11. Remove the contact segments from the slip ring.
12. Remove the three 7/16 in. A/F setscrews from the side of the actuator casing and carefully remove the motor assembly and drive collars. Remove the sealing ring from the actuator case.
13. Remove the internal circlip holding the bearing into the case and push the wormshaft and bearings out of the casing.
14. Remove the loom socket from the actuator casing.

Gearchange electric actuator - To dismantle
Cars from serial numbers
34573 - Silver Shadow II
34601 - Silver Wraith II
33019 - Corniche and Camargue
1. Disconnect the transmission linkage and the actuator loom plug(s). Remove the actuator from the car.
2. Remove the eight 2 B.A. nuts and washers and carefully withdraw the side casing.
3. Remove the 7/16 in. A/F nut and washer and withdraw the cam.
4. Disconnect all terminals on the contact plate and micro-switches.
5. Remove the four 3 B.A. nuts and washers and withdraw the contact plate. Remove the relay connections (see Page T5 - 9).
6. Remove the nuts and bolts which secure the micro-switches, relay mounting bracket, relays and motor cable connection posts.
7. Remove the securing setscrew and washer and withdraw the output lever.
8. Withdraw the washer and the rubber boot.
9. Remove the circlip and thrust washer.
10. Withdraw the slip ring and gear assembly from the actuator case.
11. Remove the contact segments from the slip ring.
12. Remove the three 7/16 in. A/F setscrews and washers from the side of the actuator casing and remove the motor assembly and drive coupling. Remove the sealing ring from the actuator case.
13. Remove the internal circlip holding the wormshaft; push the wormshaft and bearings out of the casing.
14. Carefully cut and remove the tie wrap from around the electrical wiring.
15. Remove the securing clips from around both ends of the conduit; withdraw the conduit from the cast elbows.
16. With a small diameter shaft, push out the electrical leads from the loom plug. Collect the loom plug, conduit elbow (tunnel connection), securing clips and conduit.
17. Fasten together the electrical cables with tape and pull them back through the cable exit of the actuator casing.

Gearchange electric actuator - To inspect
1. Examine the magnesium casing for cracks or other damage.
2. Ensure that the joint faces are clean and free from burrs.
3. Examine the driving dog slot for excessive wear, also the mating shaft on the drive end of the motor armature shaft. The dog should be an easy sliding fit on the shaft but without excessive side play (see Page T5 - 9).
4. Examine the general condition of the plug(s) assembly.
5. Ensure that no strands of wire are broken where they enter the pins. In the event of the plug being considered unserviceable, it is recommended that the whole assembly be renewed. Special crimping tools and Cannon insert tools are required for assembly purposes and unless these are available the work should not be attempted.
6. Examine the eight spring contacts for security on the insulated base.

Care must be exercised when handling the assembled base plate so that the contacts and the relays are not damaged.

7. Check the height of the contacts from the base plate. The contact point should be approximately 12,32 mm. (0.485 in.) from the contact (lower) side of the base. If excessive wear has occured on the contact points the base assembly should be renewed.
8. If the dual relay assembly is faulty, it is recommended that a new assembly be fitted. The relays are precision units and are accurately set to give the correct operating times. The spring-loaded adjusting screw is set during the initial build of the relay and the setting should not be altered (see Page T5 - 9).
9. Ensure that the terminals and the terminal blocks are secure on the insulated base.

10. Examine the general condition of the wiring.
11. If the components are satisfactory, retain them with adhesive tape until they are required for final assembly.
12. Check the tightness of the four 5 B.A. screws which secure the slip ring assembly to the shaft.
13. Ensure that a 0,64 mm. (0.025 in.) air gap exists on each side of the silver plated segments which are secured to the slip ring.
14. Ensure that the edges of the slip ring around the air gap are free from burrs.
15. Examine the slip ring face for signs of tracking. This should not normally occur but, if signs of tracking are found, the slip ring assembly must be renewed.
16. Examine the teeth on the worm gear and the worm for damage or uneven wear.
17. Examine the bearing bores in the main casing for signs of fretting. The bearing should be a light push fit in the casing. Reject the casing if the push fit cannot be obtained.
18. Examine for wear, the bush which supports the output shaft. The shaft should be a running fit in the bush, without excessive clearance i.e. the shaft should not rock in the bush.

Actuator socket and cable assembly
1. Inspect the cables where they enter the plug(s).
2. Ensure that no corrosion exists and that none of the individual cable strands are broken.

Actuator casing
1. Inspect all the sealing faces and the actuator casing and the side cover.
2. Remove all traces of sealing joint and sealing compound.

Wormwheel
1. Inspect the wormwheel for abnormal wear of the teeth.

Wormshaft bearing
1. Inspect the bearings for undue wear or signs of roughness when rotated.

Micro-switch contacts - To set
1. Remove the low tension cable from the ignition coil, switch on the ignition and check that the actuator will select all six gear stations correctly.
2. Move the gear selector lever to 'D' and fit the micro-switch cam to the actuator output shaft. When tightening the $^{7}/_{16}$ in. A/F nut, the torque reaction should be taken by gripping the output lever such that the tightening force is not absorbed by the nylon teeth of the wormwheel.
3. Move the gear range selector lever to the Park position.
4. Locate the two micro-switches (Neutral start and Height control switches).

Move the switches towards the peak of the cam until the switch plungers are in the centre of the peak and are depressed to within 0,51 mm.(0.020 in.) of the switch body as shown in Figure T26. When both switches are in the correct position, tighten the mounting bolts.
5. Repeat this procedure on the left-hand micro-switches keeping the switch body on the Reverse micro-switch parallel to the bottom micro-switch body.
6. Select Reverse gear and check that all three switches are clear of the cams.
7. Select Neutral and ensure that the right-hand pair of switch plungers are correctly depressed and that the Reverse micro-switch is clear of the cam.
8. Switch off the ignition and fit the coil low tension cable.
9. Remove the actuator from the car and fit the casing side cover, painting both sides of the new gasket provided with a suitable jointing compound. Fit the actuator to the transmission, connecting the loom plug and the actuator linkage.

Gearchange electric actuator - To assemble
Cars prior to serial numbers
34573 - Silver Shadow II
34601 - Silver Wraith II
33019 - Corniche and Camargue
1. Press the output shaft bearing into the actuator casing. The bearing should be fitted such that it is slightly proud on both the inside and outside of the casing.
Note
This bearing is an oil retaining type and should **not** be soaked in any solvent.
2. Fit the wormshaft bearings to the wormshaft ensuring that the bearings are adquately lubricated with Retinax 'A' grease.

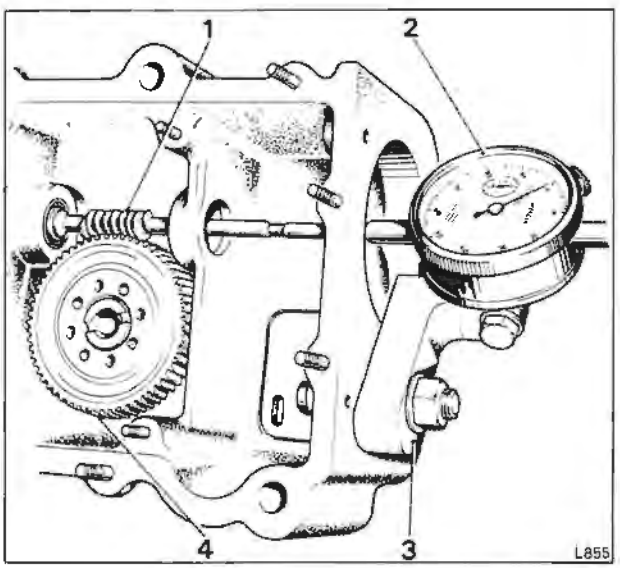

Fig. T22 Checking wormshaft end-float
1 Wormshaft
2 Dial indicator gauge
3 Gauge arm
4 Slave gear

Printed in England
© Rolls-Royce Motors Limited 1980
August 1980
TSD 4200

3. Assemble the wormshaft and bearings into the actuator case. The bearings must be a slide fit in the casing bores. Adjust the end-float of the wormshaft to between 0,005 mm. and 0,012 mm. (0.002 in. and 0.005 in.) using a suitable thickness of packing washer. Fit the circlip.
4. Fit new contact segments to the slip ring. Ensure that the edges of the segments are free from burrs.
5. Fit the slip ring and gear assembly into the main bush checking that the shaft is a slide fit in the bush.
Lubricate the gear teeth with Retinax 'A' grease. Use only the minimum amount of grease.
6. Fit the thrust washer and circlip to the output shaft.
7. Fit the rubber gaiter, washer and output lever to the shaft. Noting the position of the output lever.
8. Check that the wormshaft rotates freely. Rotate the wormshaft until the open circuit sections of the slip ring are at 90°to the wormshaft and the flat side of the 'D' section of the output shaft inner end is uppermost.
9. Fit the splined collar and coupling onto the wormshaft.
10. Fit the new sealing ring to the groove in the case and pass the motor cables through the hole.
11. Mate the splined collar on the motor shaft with the nylon coupling.
12. Fit the three $^{7}/_{16}$ in. A/F motor mounting bolts.
13. Check that the wormshaft is free to rotate.
14. Fit the dual relay provided to the new contact assembly and check the tightness of the 5 B.A. terminal screws on the contact assembly.
Note
This dual relay is a precision component and its internal settings can easily be upset by maltreatment.
15. Loosely fit the micro-switches to the contact plate assembly. Ensure that the spring washers are fitted under the heads of the long 6 B.A. screws in the slotted holes or under the nuts adjacent to the contact plate in the plain holes.
16. Loosely fit the contact plate assembly into the casing. Taking care not to damage the relay assembly, guide the motor feed wires between the casing and the indentation in the contact base plate.
17. Fit the four 3 B.A. nuts and washers to the contact plate and connect the motor feed cables and the suppressor across the relay mounting bolts as shown in Figure T23. All slack in the motor cables should be taken up by rotating the eyelets about the terminal posts.
18. View the layout of the contacts onto the slip ring through the elongated hole in the contact plate and ensure that there is a minimum of 1,27 mm. (0.050 in.) between adjacent contacts. Also ensure that there is approximately 1,58 mm. (0.062 in.) from either the edge of the segments or the countersinkings for the retaining screws.
19. Fit the rubber gasket and socket assembly, guiding the cables through the casing and the aperture in the contact plate.
The socket should be fitted so that the locating tong adjacent to pin A is uppermost on the sloping mounting face of the casing.
20. Fit all cables to their respective connections in accordance with Figures T23 and T24.
The longer cables to the contact plate should be fitted first, followed by the shorter cables and finally the micro-switch and motor connections.
It is recommended that the wires are put into their respective positions before attachment. Also, when making connections to the 5 B.A. terminal screws on the contact plate extreme care should be used when fitting the terminal securing nuts. If these are tightened excessively the first nut on the terminal will be loosened resulting in a poor connection.
21. Fit the actuator onto the gearbox mounting bracket, fit the loom plug to the actuator and connect the linkage.

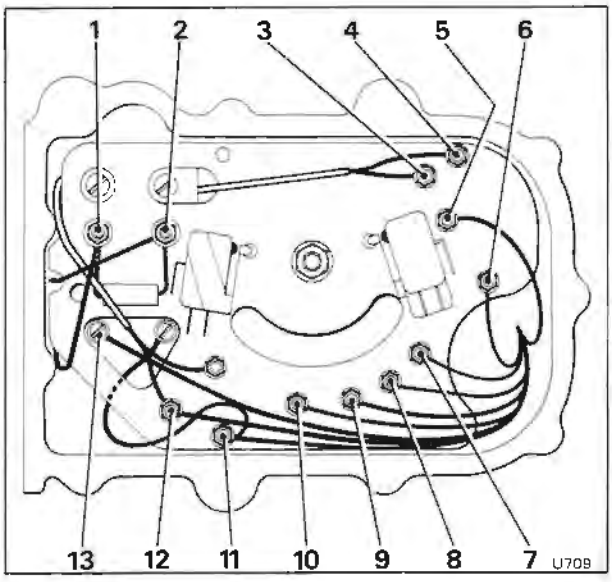

Fig. T23 Cable connections - plug type actuator
1 Blue/green to motor
2 Red/green to motor
3 Red to relay
4 Red to relay
5 Black/brown from plug to terminal P
6 Black/red from plug to terminal R
7 Black/blue from plug to terminal N
8 Black/green from plug to terminal D
9 Black/yellow from plug to terminal I
10 Black/white from plug to terminal L
11 Black from plug to earth terminal
12 Black/slate from plug to ignition terminal
13 Brown/black from plug to relay

Gearchange electric actuator - To assemble
Cars from serial numbers
34573 - Silver Shadow II
34601 - Silver Wraith II
33019 - Corniche and Camargue

1. Fit the main output shaft bearing into the actuator casing. The bearing should be fitted such that it is slightly proud on both the inside and outside of the casing.
2. Inspect the inside edge of the cable entry hole and ensure that it is free from burrs and sharp edges.
3. Check the gear form on the wormshaft is free from burrs and that no foreign particles are trapped between the gear teeth.
4. Fit the bearings to the wormshaft ensuring they are lubricated with Retinax 'A' grease. These should be a push fit.
5. Assemble the wormshaft and bearings into the actuator case. The bearings must be a push fit in the casing bores; on no account should they require a hammer load to assemble them.
6. Adjust the end-float of the wormshaft to between 0,005 mm. and 0,012 mm. (0.002 in. and 0.005 in.) using a suitable washer. Fit the circlip. Check the end-float onto the end of the shaft using a dial gauge (see Fig. T22).
7. Check the gear form on the nylon gear is good and free from blow holes and burrs. Check that the shaft bearing area is free from burrs.
8. Fit the nylon gear onto the output shaft using four 5 B.A. screws so that the holes used are at the end of the 'double D' machined flats.
9. Fit the silver plated segments onto the slip ring base. The corners of the segments must be completely free from burrs.
10. Fit the slip ring assembly onto the output shaft assembly, using four 5 B.A. screws and washers. Check the tightness of the 5 B.A. screws after the initial tightening as the nylon tends to settle slightly after the initial compression.

Note
It is essential that the slip ring runs true to the main output shaft.

11. Ensure that both the shaft bearing surface and the inside of the porous bronze bush are clean. **Do not** clean the bronze bush with any degreasing agent.
12. Fit the main output shaft and slip ring assembly into the bush. This should slide in and no attempt should be made to force it into position.
13. Lift out the shaft and check it has received a smear of oil from the porous bronze bush. Lubricate the nylon gear with Retinax 'A' grease and then fit the assembly into the casing.
14. Fit a bronze washer onto the outside of the shaft and then fit the circlip.

Note
Ensure the wormshaft can turn freely and rotate the assembly until the slip ring open circuit sections are approximately at 90° to the wormshaft, and the flat side of the 'D' on the shaft is uppermost.

15. Fit the rubber gaiter to the outside of the casing and over the shaft. Then fit a bronze washer, connecting shaft, securing setscrew and washer.
16. Fit the nylon coupling onto the driving dog of the wormshaft (see Page T5 - 9).
17. Seat the 'O' ring in its groove in the actuator

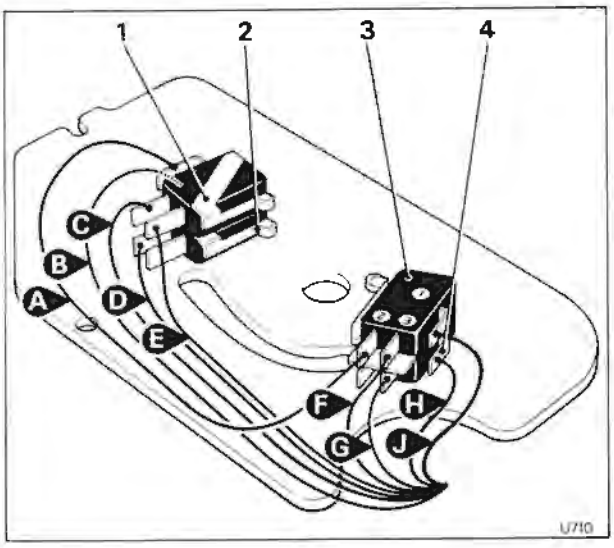

Fig. T24 Micro-switch connections - All cars
1 Reverse micro-switch
2 Hood micro-switch
3 Height control switch
4 Neutral start switch
A Green/yellow
B Blue/brown
C White/brown
D Brown/slate
E Green/blue
F Black
G White/red
H White/yellow
J Light green/green

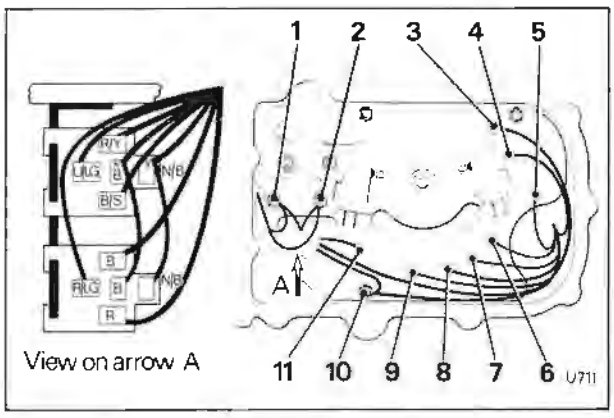

Fig. T25 Cable connections - integral loom actuator
1 Red/green to motor
2 Blue/green to motor
3 Red to loom
4 Black/brown to loom
5 Black/red to loom
6 Black/blue to loom
7 Black/green to loom
8 Black/yellow to loom
9 Black/white to loom
10 Black to earth terminal
11 Red/yellow to relay

Printed in England
© Rolls-Royce Motors Limited 1980

casing and pass the motor feed wires through the hole in the casing. Mate the nylon coupling on the wormshaft with the motor shaft and hold the motor in position.

18. Fit the three mounting setscrews and washers and tighten evenly. Check that the wormshaft can be rotated easily.

19. Fit the sealing gasket and outlet elbow to the cable exit of the casing; secure with four nuts and spring washers.

20. Feed the loom cables through the actuator casing from the inside. A strip of tape around the cable ends may assist in this operation. Pull the loom through until sufficient length of cable is left inside the casing to connect to the contact plate assembly.

21. Check the inside edges of the conduit elbow (tunnel connection) are free of burrs. Feed the loom through the conduit and elbow; push the conduit over the cable exit connection of the casing and the conduit elbow, secure both ends with spring clips. Remove the tape from the cable ends; connect the cables into the 20-way plug (see Fig. T27).

22. At the inside of the actuator casing fit a tie wrap to the loom at the cable exit. This should be passed through the centre of the loom and then wrapped around the loom 1½ times and fixed tightly. The position of the tie wrap must be such that when the actuator is suspended by the loom, the tie wrap takes the load and no electrical connections are under stress.

23. Connect the electrical connections to the relays on the underneath of the contact plate assembly (see Page T5 - 9). Fit a tie wrap around the cables and bracket to avoid a foul between the wires and motor shaft.

24. Loosely fit the contact plate assembly into the casing, taking care not to damage the relay assembly. Guide the motor feed wires between the casing and the indentation in the contact plate tufnol base.

25. Fit the four 3 B.A. nuts and washers, tightening them evenly.

26. View the layout of the contacts onto the slip ring through the elongated hole in the contact plate and ensure that there is a minimum of 1,27 mm. (0.050 in.) between adjacent contacts. Also, ensure that there is approximately 1,58 mm.(0.062 in.) from either the edge of the segments or the countersinks for the retaining screws.

27. Fit the electrical connections, starting with the longest connections on the contact base first.

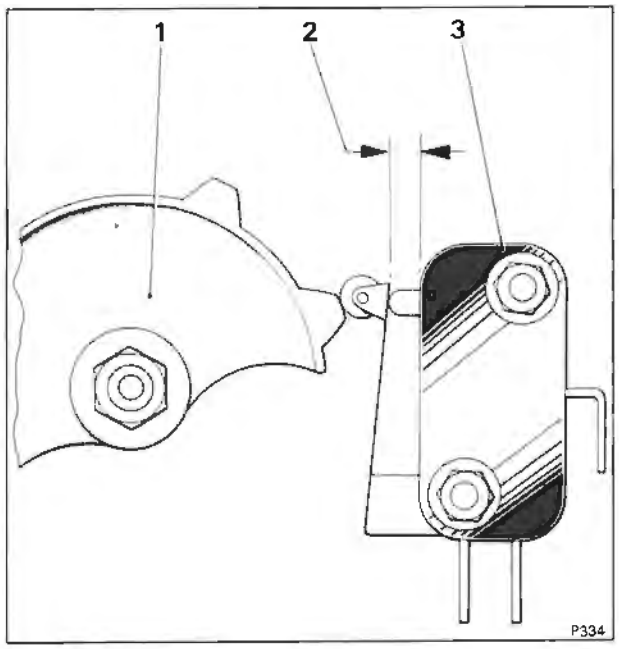

Fig. T26 Adjustment of micro-switches
1 Cam
2 Gap 0,51 mm. (0.020 in.)
3 Micro-switch

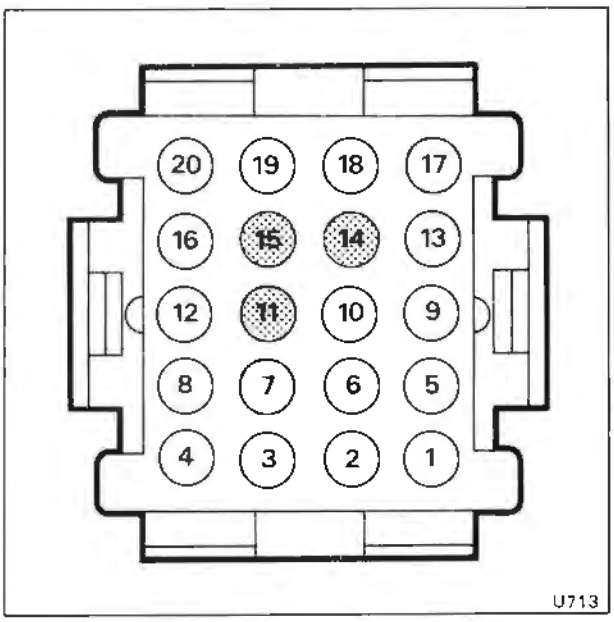

Fig. T27 20-way plug connections
1 Black/white
2 Black/yellow
3 Black/green
4 Black/blue
5 Brown/black
6 Black/red
7 Black/brown
8 Black/slate
9 Light green/green
10 Green/black
11 Not used
12 Black
13 Green/blue
14 Not used
15 Not used
16 Blue/brown
17 White/brown
18 White/red
19 White/yellow
20 Brown/slate

progressing to the shorter wires and then finally the micro-switches, suppressor and motor terminations (see Figs. T24 and T25).
28. Fit the casing lid, with its gasket painted with Wellseal on both sides. Tighten down using nuts and spring washers.
29. Fit the rubber boot over the motor. A smear of grease inside the leading edge of the boot assists the fitting. Retain the boot onto the motor using a wire clip, which, while needing reasonable tightening should not be allowed to cut into the rubber.

Modified electrical connections (loom plug)
The 20-way plug has been superceded by two 9-way plugs (see Page T5 - 9). Therefore the main distribution loom has also been modified. The cable connections for the plugs are as shown in Figure T28.

Gearchange actuator motor - To dismantle
1. Using a suitable puller remove the drive gear from the motor. Alternatively, tap out the driving pin (see Page T5 - 9).
2. Unscrew and withdraw the two bolts securing the motor housing, remove the housing.
3. Remove the armature from the end plate.

Gearchange actuator motor - To inspect
1. Examine the magnets for any damage, cracks or fractures.
2. Examine the brushes for wear; fit new brushes if necessary.
3. Examine the armature commutator for wear or damage, if scored polish with fine emery cloth. If the score marks are heavy and connot be removed with light polishing, fit a new armature.
4. After polishing carefully clean the commutator slots to remove particles of carbon.
5. Examine the bearing bushes for wear, replace if necessary.
6. Examine the armature shaft for wear on the bearing diameter.

Gearchange actuator motor - To assemble
Assemble the actuator motor (see Figs. T29 and T30) by reversing the procedure given for dismantling. Test the motor after assembly, if the current consumption exceeds 7.5 amps. the armature has an electrical fault and should be renewed.

Gearchange electric actuator - To fit
1. Fit the actuator to the rear extension of the transmission.
2. Torque tighten the bolts (see Chapter P).
3. Fit the 'multi-pin' plug and tighten the knurled nut (see Page T5 - 9). Alternatively, feed the plug end of the wiring loom through the hole in the transmission tunnel. Secure the elbow to the tunnel ensuring that a new gasket is fitted. Feed the wiring loom behind the automatic air conditioning servo unit clips and connect the electrical plug(s).
4. Connect the linkage.
5. Connect the battery.

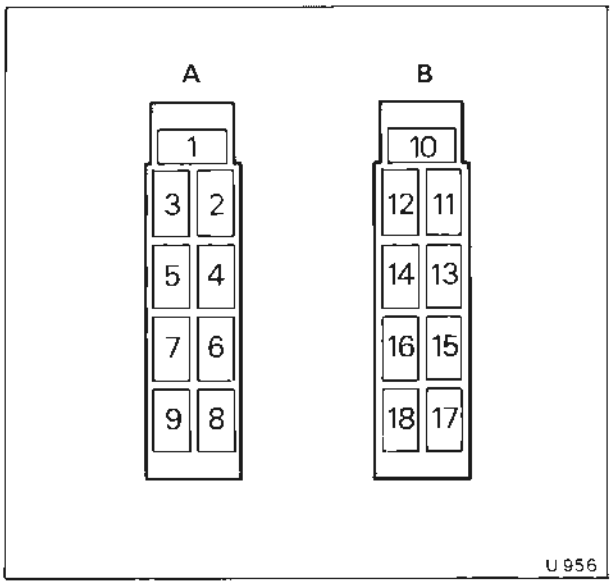

Fig. T28 Modified loom plug connections

A
1 Brown/black
2 Black/red
3 Black/brown
4 Black/green
5 Black/blue
6 Black/white
7 Black/yellow
8 Black
9 Black/slate

B
10 Green/black
11 Not used
12 Light green/green
13 Green/blue
14 White/brown
15 White/yellow
16 White/red
17 Brown/slate
18 Blue/brown

Printed in England
© Rolls-Royce Motors Limited 1980

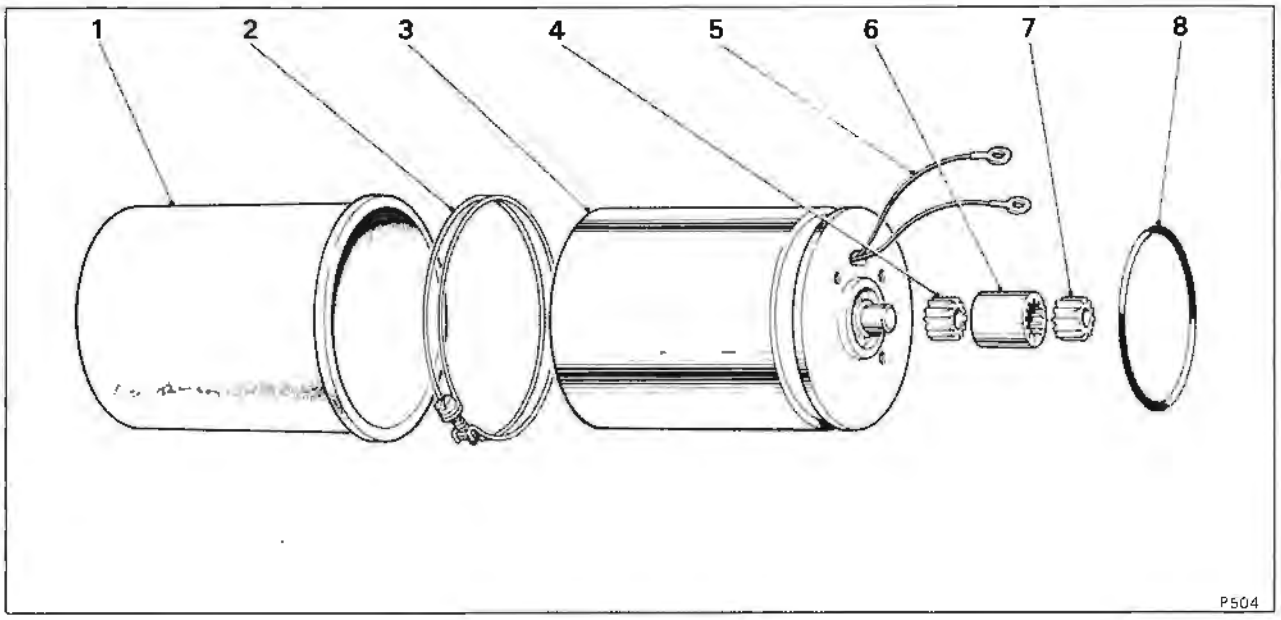

Fig. T29 Gearchange actuator motor - splined coupling

1 Motor cover
2 Motor cover securing clip
3 Motor
4 Motor splined drive
5 Motor flying leads
6 Coupling (splined)
7 Wormshaft splined drive
8 'O' ring

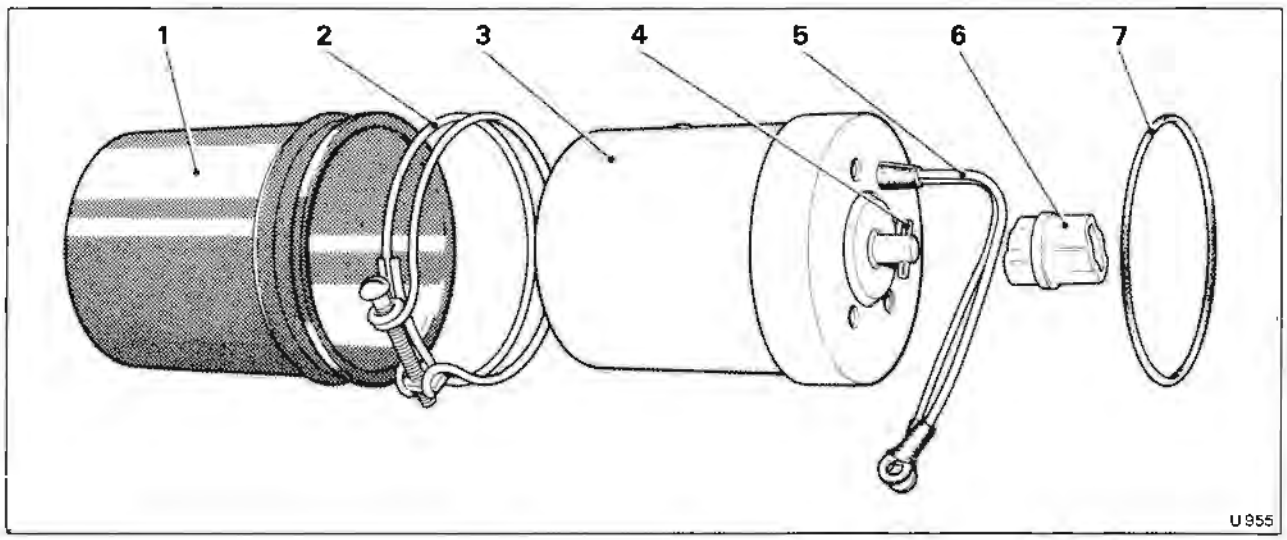

Fig. T30 Gearchange actuator motor - pin coupling

1 Motor cover
2 Motor cover securing clip
3 Motor
4 Motor pin drive
5 Motor flying leads
6 Motor drive coupling
7 'O' ring

Modifications to gear change actuator

Electrical connections with integral loom
From car serial numbers
34573 - Silver Shadow II
34601 - Silver Wraith II
33019 - Corniche and Camargue

Motor to actuator coupling simplified
From car serial numbers
Silver Shadow II - SRX 34573, SRH 34578, SRH 34583, SRH 34591, SRH 34592, SRH 34595, SRH 34599 and onwards.
Silver Wraith II - LRX 34469, LRX 34470 and onwards.
Corniche - CRG 34319, DRG 34322, DRG 34327 and onwards.
Carmargue - JRX 32181 and onwards.

Electrical relays - Lucas part replaced by two Bosch 'mini-relays'
From car serial numbers
Silver Shadow II - SRH 36618, SRH 36638, SRK 36674, SRX 36676, SRK 36822, SRK 36825, SRH 36830, SRK 36832 and onwards.
Silver Wraith II - LRX 36425, LRX 36436, LRK 36493, LRH 36572, LRH 36574, LRK 36705, LRX 36709, LRK 36712, LRH 36718 and onwards.
Corniche - DRK 50045, CRX 50047, CRX 50050 and onwards.
Camargue - JRK 32716 and onwards.

Modified electrical connections between actuator and main distribution loom

Two 9-way plugs replace one 20-way plug from the following car serial numbers.

Silver Shadow II, Silver Wraith II and Bentley T2
Right-hand drive
SBH 0040836, LRH 0040839 and onwards
Left-hand drive
LRX 38632, LRL 39197, LRL 39282, LRL 39351, SRL 39760, SRL 39914, SRL 39939, SRL 39944, SRX 39949, SRX 39953, SRK 39957, SRL 39959, SRX 39962, SRL 39964, SRL 39976, SRX 39981 and onwards.

Corniche
CRH 0050482, DBL 50508C, CRH 0050521 and onwards.

Camargue
JRX 50576 and onwards

Printed in England
© Rolls-Royce Motors Limited 1980

Section T6

Transmission - To remove and fit

Transmission - To remove

1. Drive the car onto a ramp.
2. Ensure that both front road wheels and one rear road wheel are suitably 'chocked' to prevent the car moving.
3. Switch on the ignition and select Neutral position with the gearchange selector lever. This ensures that the transmission and propeller shaft are not locked in the Park position.
4. Switch off the ignition and remove the gearchange thermal cut-out from the fuseboard.
5. Disconnect the battery.
6. Jack up the 'un-chocked' rear road wheel to enable the propeller shaft to be rotated
7. Disconnect and remove the propeller shaft (see Chapter F).
8. Lower the rear road wheel and suitably 'chock'.
9. Raise the bonnet.
10. Drain the transmission fluid (see Section T2).
11. Remove the dipstick and filler tube, together with the vacuum modulator pipe. Blank off the hole in the sump to prevent any remaining transmission fluid from running out as the transmission is removed. Discard the 'O' ring (if fitted) from the filler tube connection.
12. Disconnect the speedometer electronic impulse transmitter electrical connections, noting the cable colours to assist when fitting. Slacken and remove the transmitter retaining nut and withdraw the transmitter.

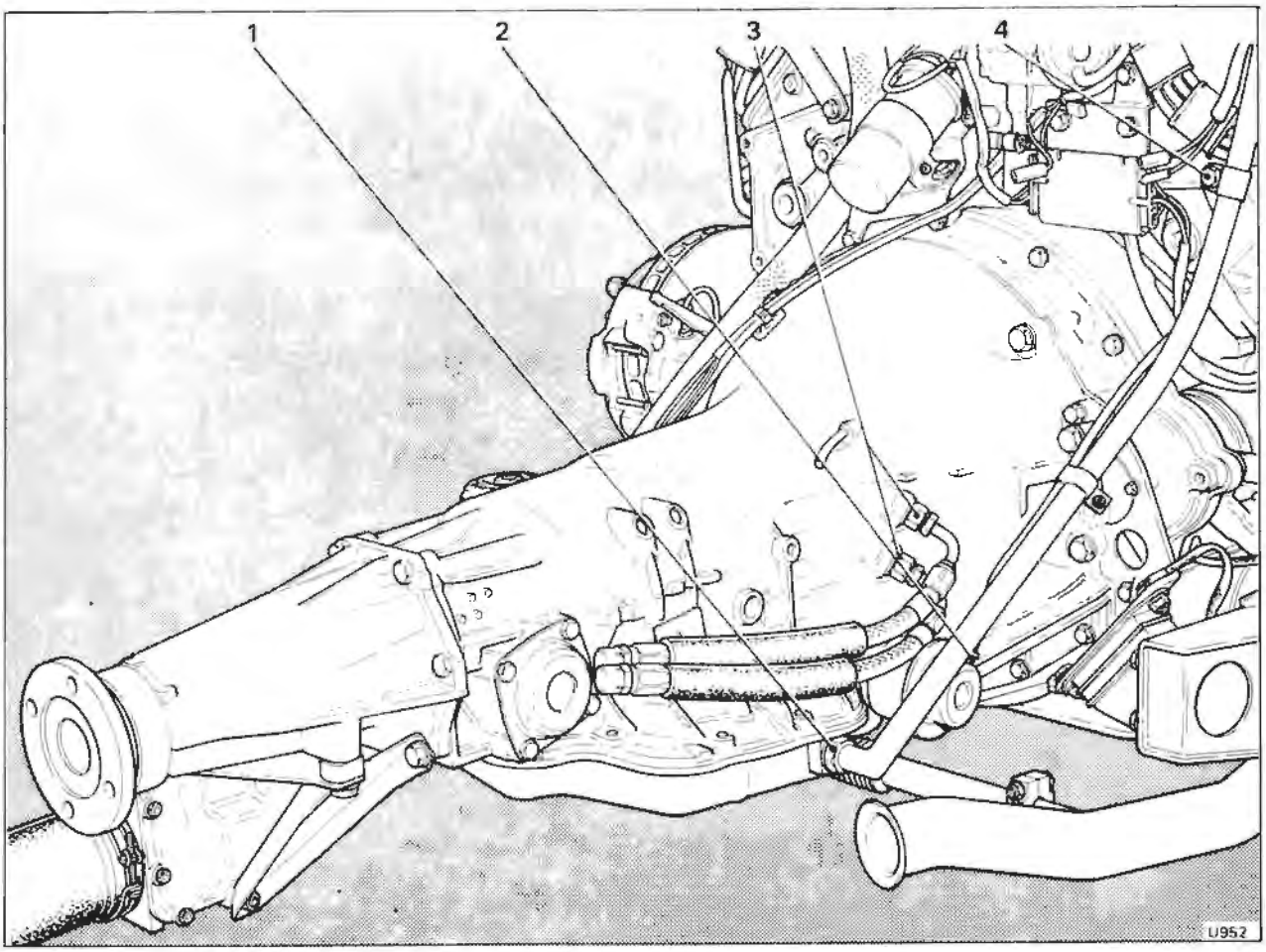

Fig. T31 Transmission disconnecting points - Right-hand side

1 Fluid drain point
2 Modulator pipe
3 Transmission oil cooler pipe connections
4 Dipstick/filler tube clip

Printed in England
© Rolls-Royce Motors Limited 1981

13. Disconnect the top gear switch and detent solenoid electrical connections.
14. Remove the gearchange actuator electrical connections (see Section T5).
15. Disconnect the operating rod from the side of the transmission case.
16. Remove the bolts securing the gearchange actuator to the rear extension, remove the actuator.
Note
Operations 15 and 16 are only required to assist the handling of the transmission.
17. Remove the right-hand front silencer/catalytic converter and fire shield (if fitted).
18. Remove the front balance/E.G.R. balance pipe (if fitted).
19. On cars conforming to a 1980 Californian specification, remove the front section of the exhaust system (see Chapter O).
20. On left-hand drive cars remove the throttle linkage cross-shaft.
21. Disconnect the two transmission fluid flexible pipes leading to and from the heat exchanger situated in the engine coolant radiator. The pipes should be disconnected where the flexible pipe joins the solid metal pipe.
Note
There may be a small quantity of transmission fluid in the pipes which will drain out when the pipes are disconnected therefore, ensure a suitable container is available.
22. Remove the setscrews which secure the front cover plate and bell housing bottom cover; remove the plate and cover.
23. Scribe correlation marks onto the converter and flexplate, then remove the setscrews which secure the engine flexplate to the torque converter.
Note
Take care not to damage the flexplate or starter ring when turning the torque converter to gain access to the setscrews.
24. Using a suitable platform to fit around the transmission sump,support the transmission with the aid of a trolley jack and extension.
25. Unscrew the setscrews which secure the transmission to the adapter.
26. Carefully move the transmission towards the

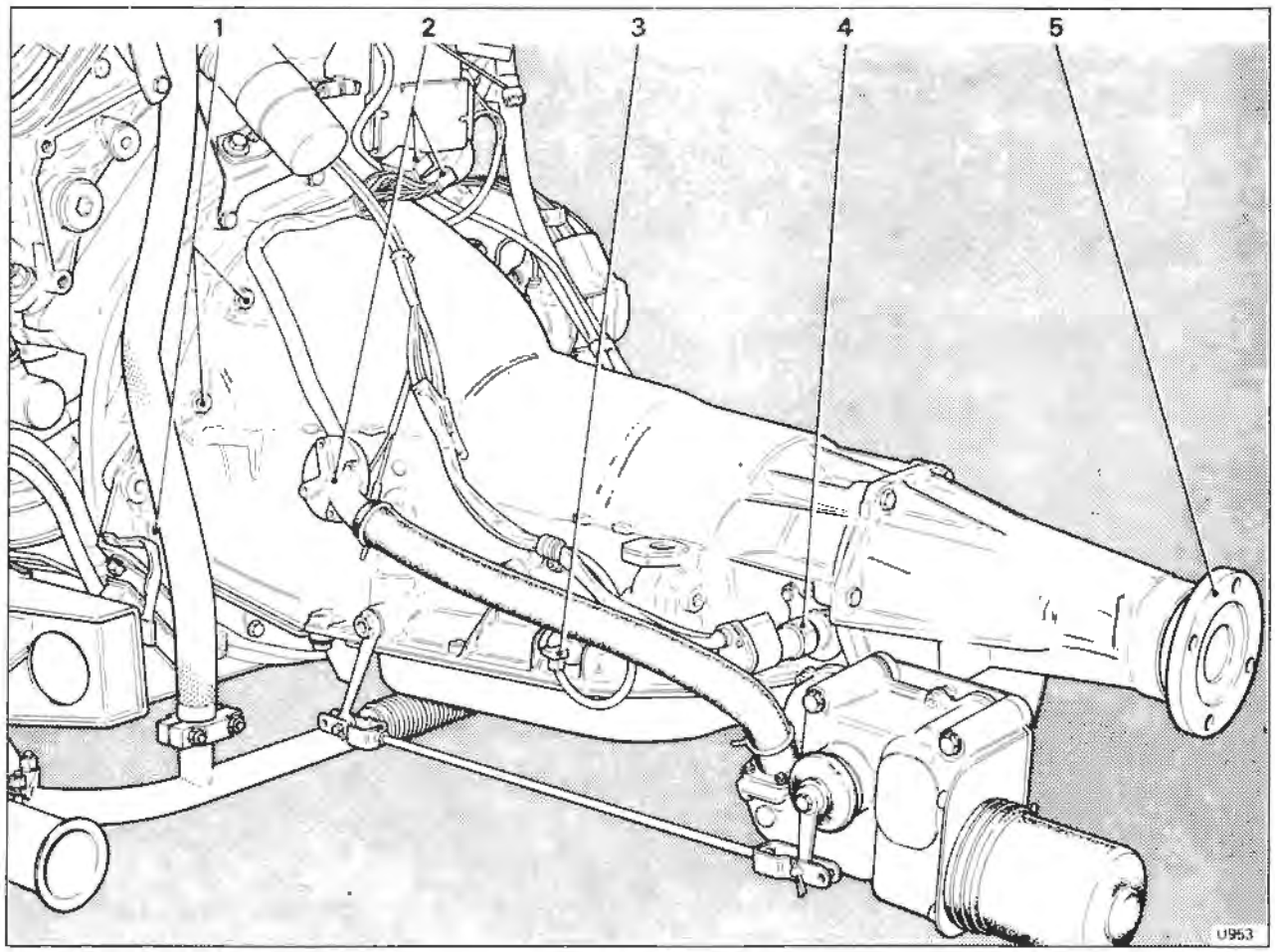

Fig. T32 Transmission disconnecting points - Left-hand side
1 Transmission securing setscrews
2 Gearchange actuator connections
3 Top gear switch/detent solenoid connections
4 Electronic impulse transmitter
5 Coupling flange

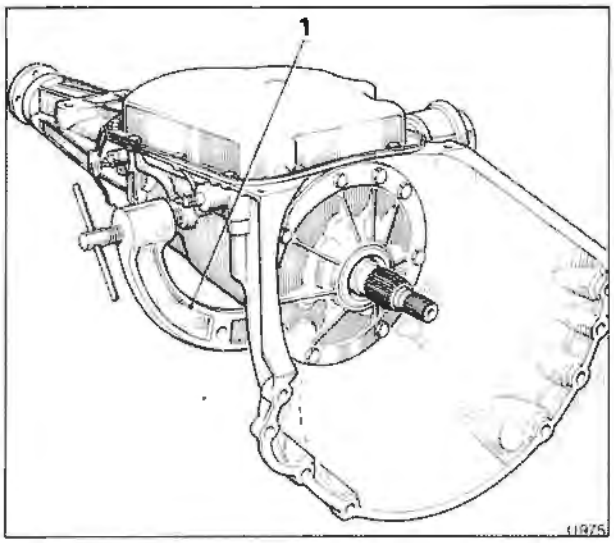

Fig. T33 Transmission in holding fixture
1 Holding fixture

rear of the car until the dowels in the transmission are clear of the mounting plate.
27. Fit the retaining clamp RH 7952 (J-21366) to prevent the converter from becoming disengaged from the transmission.
Note
The retaining clamp must be used, otherwise the converter may fall as the transmission is being removed.
28. Lower the jack until the transmission is clear of the body, then remove the transmission from beneath the car.
29. If overhaul work is to be carried out, remove the retaining clamp and withdraw the converter.
Note
A converter containing oil weighs approximately 22,68 kg. (50 lbs.).
30. Fit the transmission into the holding fixture RH 7955 (J-8763) as shown in Figure T33.

Transmission - To fit
Fit the transmission by reversing the procedure given for removal, noting the following points.
1. Ensure the mating faces of the transmission and the mounting plate are clean and free from damage.
2. Torque tighten the various nuts, bolts, setscrews, etc. to the figures quoted in Chapter P.
3. A liberal coating of Retinax 'A' grease should be applied all over the converter pilot spigot prior to fitting the converter.
4. Rotate the converter until the correlation marks (scribed on during removal) are aligned and then fit the setscrews. **Do not** lever on the starter ring when rotating the converter.
5. If a new transmission is being fitted, the heavy spot marked on the rear face of the flexplate by a radial line of either white or yellow paint must be positioned as close as possible to the light spot (white letter L) on the converter.
6. After completion of the fitting operation, fill the transmission with fluid (see Section T2).
7. Finally, road test the car for satisfactory operation.

Printed in England
© Rolls-Royce Motors Limited 1981
June 1981
TSD 4200

Section T7

Torque converter

The torque converter serves two primary functions. It acts as a fluid coupling to transmit engine torque smoothly to the transmission. It also multiplies the engine torque when additional performance is required.

The torque converter comprises three basic elements; a pump, a turbine and a stator (see Fig. T34).

The converter cover is welded to the pump to seal all three members in an oil filled housing. An engine driven flexplate bolts directly onto the converter cover so that the converter pump is mechanically connected to the engine and turns whenever the engine rotates.

When the engine is running and the converter pump is rotating, oil is picked up at the centre of the pump and discharged at the rim, between the pump blades.

The pump shell and blades are designed so that the oil leaves the pump rotating clockwise, towards the turbine blades. As the oil strikes the turbine blades, it causes the turbine to rotate.

When the engine is idling, the converter pump rotates slowly and the force of oil is not sufficient to rotate the turbine with any efficiency. This situation enables the car to stand in gear with the engine slowly idling. As the engine throttle is opened, the pump speed increases and the force of oil striking the turbine causes it to transmit torque to the gear train. After the oil has imparted its force to the turbine, the oil follows the contour of the turbine shell and blades, leaving the centre of the turbine, and rotating anti-clockwise.

Because the turbine member has absorbed the force required to reverse the direction of the clockwise rotating oil it now has greater torque than is being delivered by the engine.

To prevent the anti-clockwise spinning oil from striking the pump blades at an angle that would hinder its rotation, a stator assembly is interposed between the pump and the turbine. The purpose of the stator is to redirect the oil returning from the turbine so that its direction is altered to suit that of the pump.

The energy of the oil is then used to assist the engine in turning the pump. This increases the force of the oil driving the turbine and as a result, multiplies the torque.

The force of oil flowing from the turbine to the stator blades tends to rotate the stator anti-clockwise. However, a clutch on which the stator is mounted, prevents this.

As both turbine and car speeds increase, the direction of the oil leaving the turbine changes. The oil flows clockwise against the rear side of the stator vanes. If the stator was fixed, the flow of oil would be impeded, but the clutch allows the stator to rotate on its shaft. Once the stator becomes inactive there is no further torque multiplication and the converter functions as a fluid coupling at a ratio of 1:1.

Torque converter - To remove

1. Remove the transmission as described in Section T6.

Note

Do not forget to fit the Converter Holding Clamp RH 7952 (J-21366) otherwise the converter may fall when the transmission is removed.

2. Position a drip tray underneath the converter.

3. Remove the converter retaining clamp from the

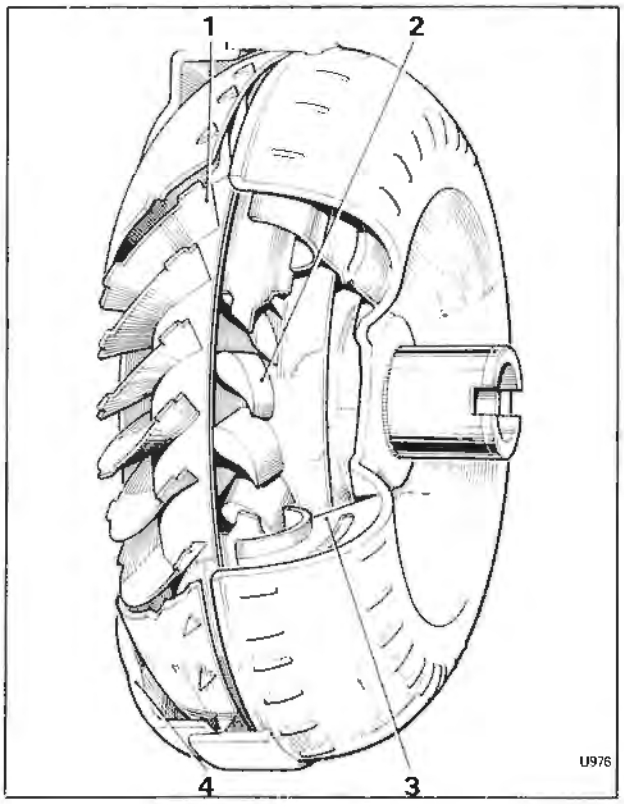

Fig. T34 Torque converter - Cut-away view
1 Turbine
2 Stator
3 Pump
4 Converter cover

Printed in England
© Rolls-Royce Motors Limited 1980

bell housing end of the transmission casing; remove the converter.

Caution

The converter and oil weigh approximately 22,68 kg. (50 lbs.) and care should be taken when removing it to ensure that it is not dropped or damaged.

Torque converter - To inspect

After removing the torque converter from the transmission visually inspect as follows.

1. Examine the converter for signs of damage.
2. Examine the neck of the converter for wear.
3. Examine the pump drive slots for wear.

For a more detailed procedure of inspection refer to Section T21-Fault Diagnosis.

Torque converter - To fit

1. Fit the converter to the transmission, ensuring that the driving slots engage with the tangs in the transmission oil pump.
2. Fit the converter holding clamp RH 7952 (J-21366).

1979 Transmissions

Changes have been made to the threads of the three setscrew holes in the torque converter from UNC to Metric. Either converter may be fitted, therefore, a careful check of the threads must be made before fitting it to the transmission.

The Metric setscrews are identified by a letter M on the head.

Section T8

Vacuum modulator and valve

The vacuum modulator is secured to the right-hand side of the transmission case and is connected by a pipe to the engine induction system. The modulator consists of a metal case which encloses an evacuated metal bellows, a diaphragm and two springs. These components are arranged so that when fitted, the bellows and an external spring apply a force that acts on the modulator valve to increase modulator pressure. Engine vacuum and an internal spring act in the opposite direction to decrease modulator pressure.

To reduce the effect of altitude on shift points, the effective area of the diaphragm is different than that of the bellows. Atmospheric pressure acts on the resulting differential area to reduce modulator pressure.

The vacuum modulator fitted to a transmission can vary dependent upon 'model year' and original build specification of the car. It is therefore, of utmost importance to ensure that the correct parts are fitted to a transmission should replacement parts be required.

To identify the modulator check the prefix letters of the transmission i.e. RS, RR or RC.

A restrictor is fitted at the bottom of the modulator pipe and an error in assembly at this point could result in a blocked signal line especially on cars fitted with full emission control systems.

Modulator pressure is directed to the 1-2 regulator valve which regulates modulator pressure to a lesser pressure which is proportional to modulator pressure. This tends to keep the 1-2 shift valve in the closed or down-change position. Modulator pressure is directed also to the 2-3 modulator valve to apply a variable pressure proportional to modulator pressure. This tends to hold the 2-3 shift valve in the closed, or down-change position. As a result, the gearchange points can be delayed to take place at higher road speeds with heavy throttle application (see Fig. T35).

Main line oil pressure is controlled in Drive range so that it will vary with torque input to the transmission. Since torque input is a product of engine torque and converter ratio, modulator pressure

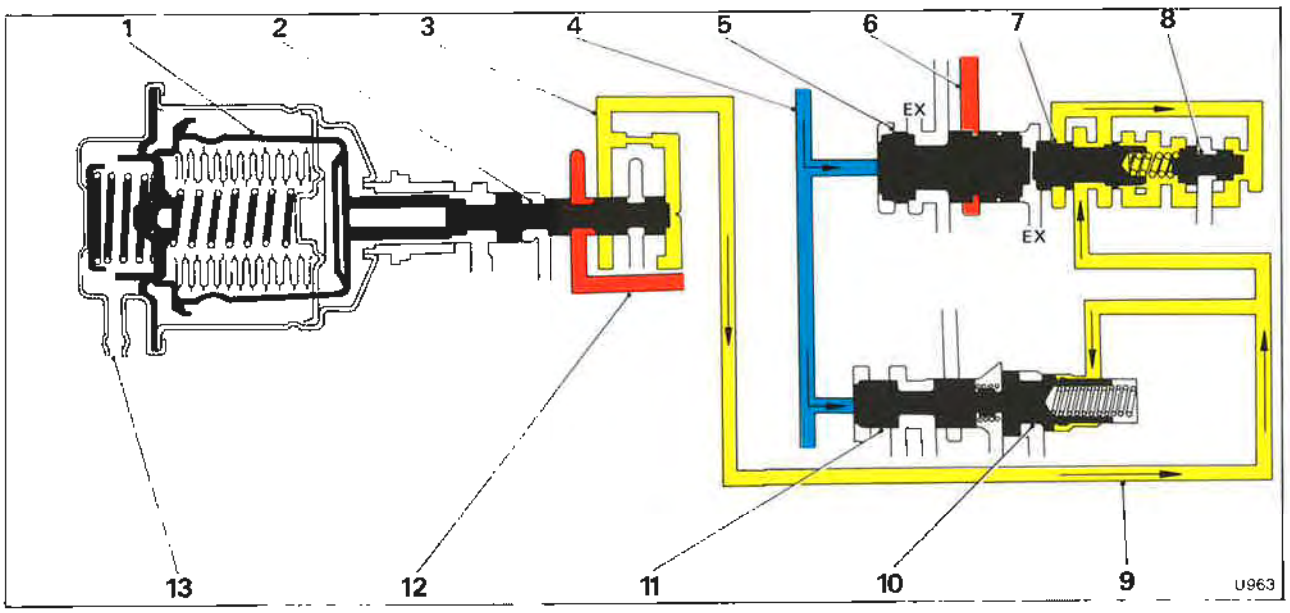

Fig. T35 Vacuum modulator and valve showing modulator pressure

1 Vacuum modulator
2 Modulator valve
3 Modulator oil
4 Governor oil
5 1-2 valve
6 Drive oil
7 1-2 detent valve
8 Regulator valve
9 Modulator oil
10 2-3 modulator valve
11 2-3 valve
12 Line oil
13 Vacuum connection

Drive or Line oil

Governor oil

Modulator oil

Printed in England

© Rolls-Royce Motors Limited 1980

August 1980

TSD 4200

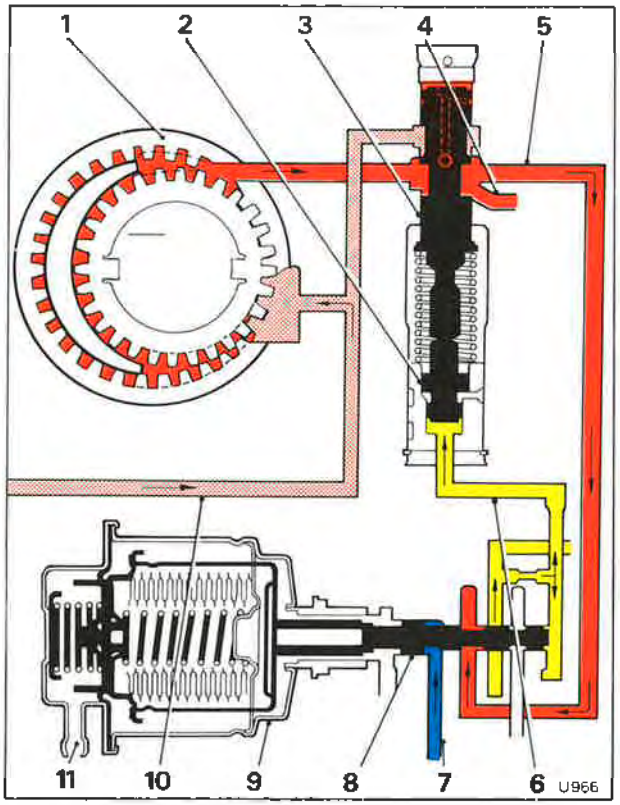

Fig. T36 Vacuum modulator and valve showing line pressure control

1 Pump assembly
2 Boost valve
3 Regulator valve
4 Converter passage
5 Line oil
6 Modulator oil
7 Governor oil
8 Modulator valve
9 Vacuum modulator assembly
10 Intake oil
11 Vacuum connection

Line oil
Governor oil
Modulator oil
Intake oil

is directed to a pressure regulator boost valve, to adjust main line (pump) pressure for changes in either engine torque or converter ratio (see Fig. T36).

To regulate modulator pressure and in turn, line pressure, with the converter torque ratio that decreases as car speed increases, governor pressure is directed to the modulator valve to reduce modulator pressure with increases in car speed. In this way, line pressure is regulated to vary with torque input to the transmission for smooth changes with sufficient capacity for both heavy and light acceleration.

Vacuum modulator and valve - To remove

The vacuum modulator can be removed from the transmission without removing the transmission from the car. The following instructions apply whether or not the transmission has been removed.

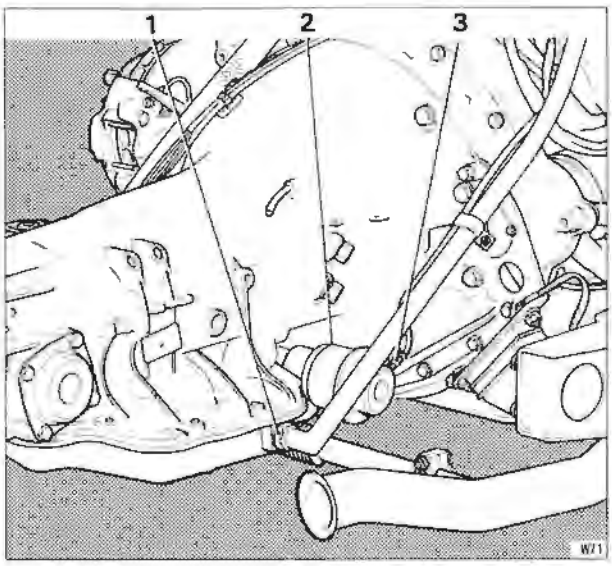

Fig. T37 Vacuum modulator and vacuum pipe

1 Fluid drain point
2 Vacuum modulator
3 Vacuum pipe

1. Place a drip tray beneath the vacuum modulator.
2. Disconnect the vacuum pipe at the modulator end if the transmission is in the car (see Fig. T37).
3. Remove the setscrew and retainer which secure the modulator to the transmission.
4. Remove the modulator and 'O' ring; discard the 'O' ring.
5. Remove the modulator valve from the transmission case.

Vacuum modulator and valve - To inspect

1. Examine the vacuum modulator for signs of distortion.
2. Examine the 'O' ring seat for damage.
3. Apply suction to the vacuum tube on the modulator and check for leakage.
4. Examine the modulator valve for scores or damage.
5. Ensure that the valve will move freely in its bore in the case.
6. Examine the modulator for damaged bellows. The modulator plunger is under approximately 7,25 kgf. (16 lbf.) pressure. If the bellows are damaged, very little pressure will be applied to the plunger.

Vacuum modulator and valve - To fit

1. Fit the valve into the bore in the case with the stem outward.
2. Fit a new 'O' ring to the modulator.
3. Fit the modulator to the case with the vacuum pipe connection toward the front of the car.
4. Fit the retainer together with the retaining setscrew and torque tighten to the figures quoted in Chapter P.
5. Connect the vacuum pipe.

Section T9

Governor assembly

The governor assembly (see Fig. T38) fits into the rear of the transmission casing on the right-hand side and is driven by a gear on the transmission output shaft.

The car speed signal to the transmission is supplied by this governor.

The assembly comprises a regulating valve, two primary weights, two secondary weights, secondary springs, body and driven gear. The weights are arranged so that only the secondary weights act on the valve. The primary weights contribute to the secondary weights through the secondary springs.

Slight changes in output shaft r.p.m. at low speeds result in small governor pressure changes.

The primary weights add additional force to the secondary weights to obtain greater changes in pressure as road speed and output shaft r.p.m. increase. As the primary weights move out at higher car speeds they reach a stop and no longer become effective. From this point, the secondary weights and springs only are used to apply pressure on the governor valve.

Drive oil pressure is fed to the governor where it is regulated by the governor and gives an oil pressure that is proportional to car road speed.

To initiate the gear change from first to second, governor oil pressure is directed to the end of the 1-2 shift valve where it acts against spring pressure which is holding the valve in the down-change (closed) position (see Fig. T39).

As the road speed of the car and subsequently the governor oil pressure increases sufficiently to overcome the spring resistance, the 1-2 shift valve train moves, allowing drive oil to flow into the intermediate clutch passage and through an orifice to apply the intermediate clutch. This makes the intermediate clutch effective which moves the transmission into second gear. Further increases in road speed and governor pressure will cause the transmission to change into third gear when governor pressure overcomes the 2-3 shift valve spring pressure.

Governor pressure is directed also to the modulator valve to regulate modulator pressure as described in Section T8.

Governor lubrication is provided by a flat in the governor sleeve which allows oil to pass to the moving parts of the governor.

Governor assembly - To remove

The governor assembly can be removed from the transmission whether the transmission is fitted to the car or not.

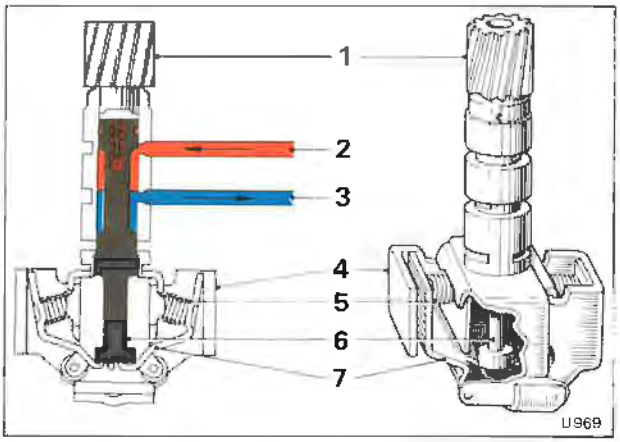

Fig. T38 Governor assembly

1 Driven gear
2 Drive oil
3 Governor oil
4 Primary weight
5 Spring
6 Valve
7 Secondary weight

Drive oil

Governor oil

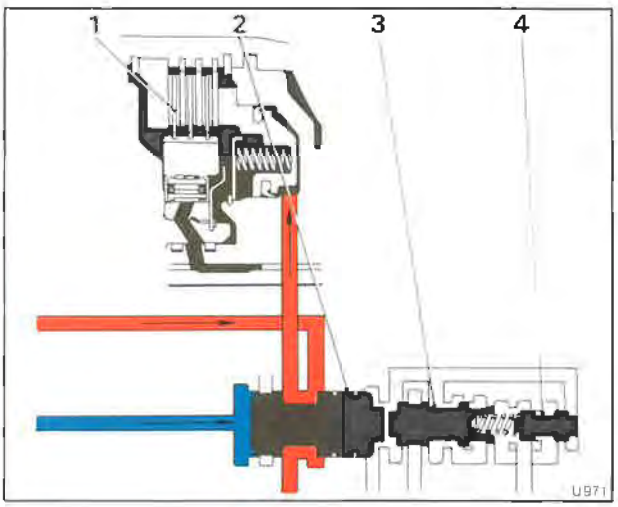

Fig. T39 Governor oil acting on the 1-2 shift valve

1 Intermediate clutch
2 1-2 valve
3 1-2 detent valve
4 Regulator valve

Drive and Intermediate clutch oil

Governor oil

Printed in England
© Rolls-Royce Motors Limited 1980

1. Position a drip tray beneath the governor cover plate.
2. Remove the four setscrews which secure the plate to the case; remove the plate and discard the gasket.
3. Withdraw the governor assembly from the case (see Fig. T40).

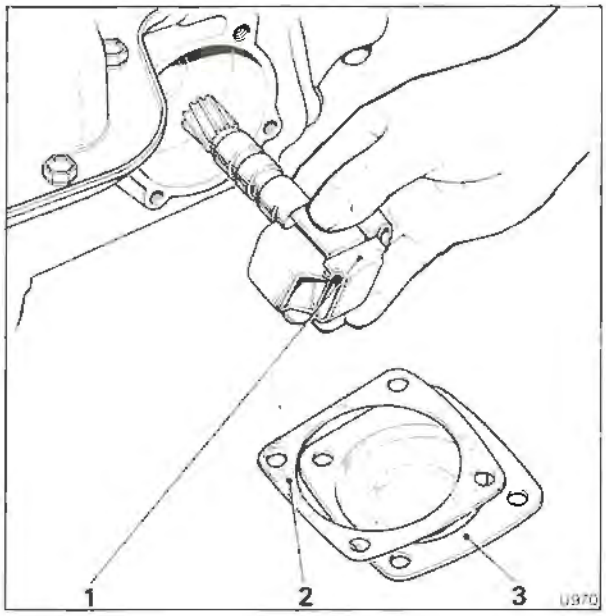

Fig. T40 Removing the governor assembly
1 Governor
2 Gasket
3 Cover plate

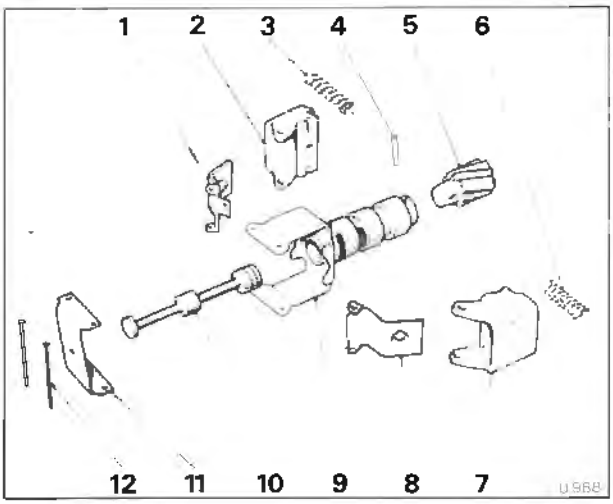

Fig. T41 Governor assembly - exploded
1 Spring retainer (secondary weight)
2 Weight (primary)
3 Spring
4 Gear retaining pin
5 Driven gear
6 Spring
7 Weight (primary)
8 Spring retainer (secondary weight)
9 Sleeve and carrier assembly
10 Valve
11 Thrust cap
12 Retaining pins

Possible causes of governor binding or locking are the pipes to the control valve unit. These may have been fitted too deep into the transmission case, so entering the governor bore.

Therefore, if difficulties are experienced when removing the governor assembly, withdraw the pipes approximately 3,17 mm. (0.125 in.).

Governor assembly - To dismantle

All the governor assembly components, with the exception of the driven gear, are selectively assembled and each assembly is calibrated. Therefore, it is recommended that if the governor assembly becomes unserviceable, it be renewed as an assembly. If the driven gear is damaged, it can be renewed separately.

It is necessary to dismantle the governor assembly in order to renew the driven gear. Dismantling may be necessary also to thoroughly clean the governor should dirt cause it to malfunction. In such cases proceed as follows.

1. Cut off one end of each of the governor weight retaining pins.
2. Remove the pins, thrust cap, governor weights and springs (see Fig. T41). The weights are interchangeable and need not be marked for identification.
3. Carefully remove the governor valve from the sleeve.

Governor assembly - To inspect

1. Wash all the components in clean paraffin, then dry them with compressed air.
2. Examine the governor sleeve for scores or burrs.
3. Ensure that the governor sleeve will slide freely into its bore in the transmission casing.
4. Examine the valve for scores and burrs.
5. Ensure that the valve will slide freely in the governor sleeve bore.
6. Examine the driven gear for damage. Ensure that the gear is secure on the shaft.
7. Examine the springs for damage or distortion.
8. Ensure that the weights operate freely in their retainers.
9. Check the valve opening at inlet and exhaust; the minimum is 0,51 mm. (0.020 in.).
10. Hold the governor as shown in Figures T42 and T43 when carrying out this check.

Governor driven gear - To renew

1. Drive out the gear retaining pin using a hammer and drift (see Fig. T44).
2. Support the governor sleeve on two 2,77 mm. (0.109 in.) thick plates inserted in the exhaust slots in the sleeve.
3. Position the plates on the bed of a press with provision for the gear to pass through, then, using a long drift, press the gear out of the sleeve.
4. Thoroughly clean the governor sleeve to remove

any swarf which may be present from the original gear assembly operation.

Note

Ensure that the new gear is the correct one for the transmission casing in which it is to be fitted.

5. Support the governor sleeve on the two 2,77 mm. (0.109 in.) plates.

6. Position the new gear in the sleeve then, using a suitable drift, press the gear into the sleeve until it is nearly seated.

7. Carefully remove any swarf which may have shaved off the gear hub, then, press the gear down until it abuts the sleeve.

8. Mark the position of a new hole on the sleeve at 90° to the original hole, then using a drill of 3,17 mm. (0.125 in.) diameter, drill a new hole through the sleeve and gear.

9. Fit the gear retaining pin.

10. Thoroughly wash the gear and sleeve assembly in clean paraffin and dry with compressed air.

Governor assembly - To assemble

1. Lightly oil the valve then fit it into the governor sleeve.

2. Fit the governor weights, springs and thrust cap onto the governor sleeve.

3. Align the pin holes in the thrust cap, governor weight assemblies and governor sleeve.

4. Fit new pins and crimp both ends of the pins.

5. Ensure that the governor weights are free to operate on the pins and check that the valve moves freely in the sleeve bore.

Governor assembly - To fit

1. Lightly lubricate the governor sleeve and gear

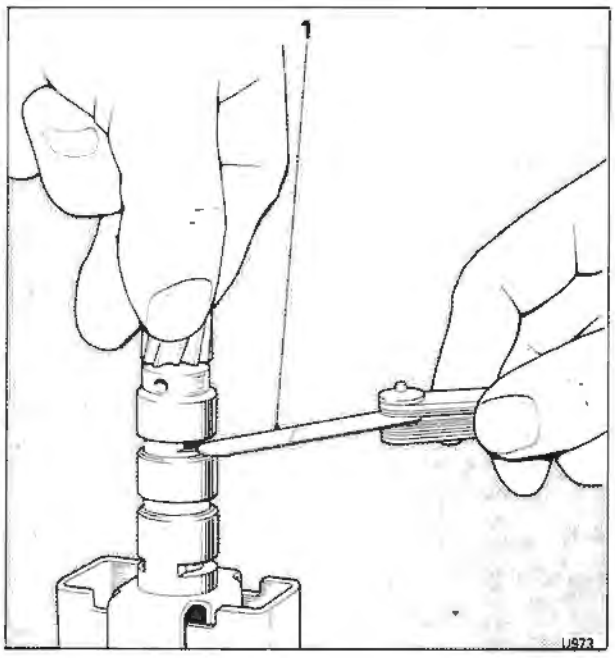

Fig. T42 Check valve opening (inlet)
1 0,51 mm.(0.020 in.) feeler gauge

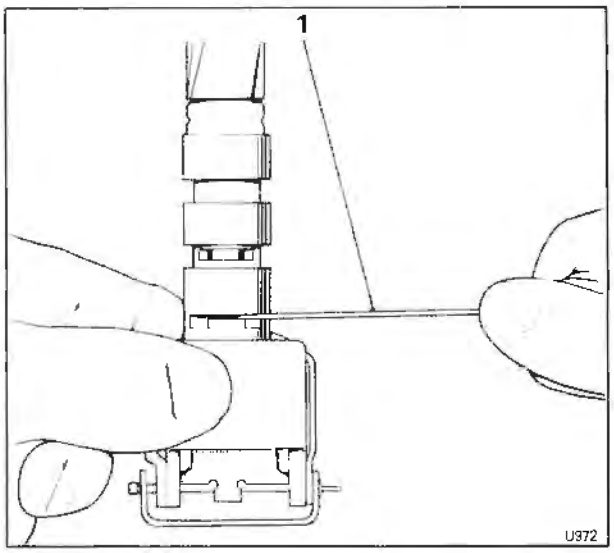

Fig. T43 Check valve opening (exhaust)
1 0,51 mm.(0.020 in.) feeler gauge

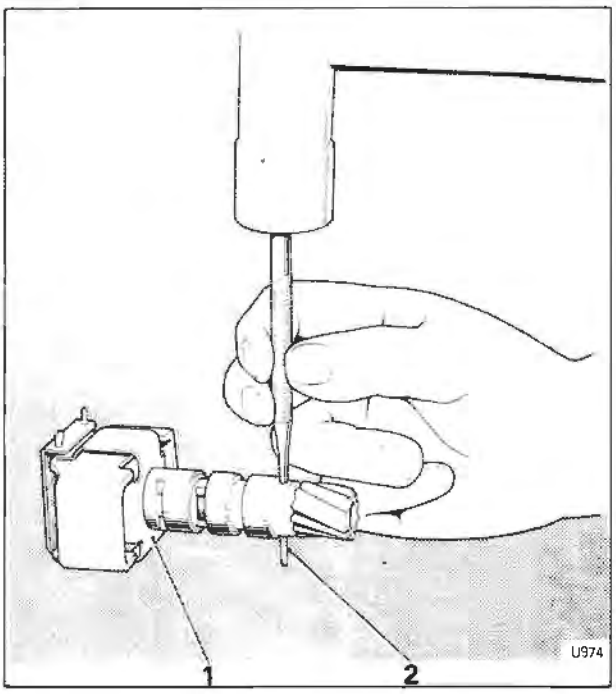

Fig. T44 Removing governor driven gear retaining pin
1 Governor assembly
2 Gear retaining pin

then fit the governor assembly into the transmission case.

2. Fit the cover, together with a new gasket.

3. Fit the four setscrews and torque tighten (see Chapter P).

4. When installing the governor assembly ensure that a clearance of approximately 6,35 mm. (0. 250 in.) is maintained between the governor pipes and transmission case, at a point 25,40 mm. (1 in.) from the right angle bend of the pipes.

Printed in England
© Rolls-Royce Motors Limited 1980
August 1980
TSD 4200

Section T10

Speedometer drive

The speedometer drive is secured to the left-hand side of the transmission main casing by a setscrew and retainer. It is driven by a gear on the transmission output shaft at a ratio of 43:19.

Speedometer drive - To remove

1. Slacken and withdraw the hexagon nut securing the electronic impulse transmitter to the speedometer drive assembly.
2. Remove the setscrew and retainer; then withdraw the speedometer drive. Discard the 'O' ring.

Speedometer drive - To dismantle

1. Hold the gear between soft jaws in a vice.
2. Remove the split pin. Then, remove the nut and washer securing the gear to the drive-shaft.
3. Tap the gear off the shaft using a soft-headed mallet.
4. Utilizing the two machined flats on the oil seal housing, hold the housing between soft jaws in a vice. Then, unscrew the two halves of the assembly.
5. Withdraw the drive-shaft.

Speedometer drive - To inspect

1. Wash all the dismantled parts in clean paraffin.
2. Examine the gear teeth for damage or excessive wear.
3. Examine the squared end of the shaft for cracking.
4. Examine the threads on the oil seal retainer for damage.
5. If the oil seal is to be renewed it should be pressed out of the housing using a suitable drift.
6. Examine the drive-shaft for burrs or sharp edges which may damage the oil seal during assembly.

Speedometer drive - To assemble

To assemble the speedometer drive, reverse the procedure given for dismantling noting the following points.

1. Torque tighten the castellated nut to the figures quoted in Chapter P; then tighten the nut to the nearest split pin hole.
2. Fit a new split pin.
3. Lightly lubricate the drive-shaft before passing it through the oil seal.
4. Ensure that the body and the seal housing are screwed tightly together.
5. Check the drive-shaft end-float; there should be a minimum of 0,38 mm. (0.015 in.).

Speedometer drive - To fit

1. Fit a new 'O' ring to the groove in the speedometer drive housing.
2. Lightly lubricate the 'O' ring to ease the fitting of the speedometer drive; fit the drive to the case.
3. Fit the retainer and setscrew.

Two sizes of setscrews may be fitted dependent upon the year of manufacture of the torque converter transmission.

Torque tighten to the figures quoted in Chapter P.

4. Connect the electronic impulse transmitter.

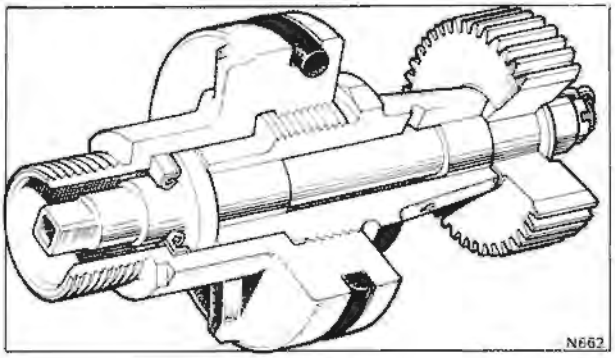

Fig. T45 Speedometer drive

Printed in England
© Rolls-Royce Motors Limited 1980
August 1980
TSD 4200

Section T11

Sump and intake strainer

Sump - To remove
Transmission fitted in the car
1. Position the car on a ramp and raise to a suitable working height.
2. Place a clean container with a minimum capacity of 3 litres (5 Imp. pints, 6 U.S. pints) under the sleeve nut which secures the dipstick filler tube to the side of the sump.
3. Withdraw the transmission dipstick. Slacken the setscrew securing the filler tube clip to the cylinder head.
4. Release the nut securing the dipstick filler tube; withdraw the filler tube and move to one side, draining the fluid into the container. Discard the 'O' ring (if fitted) from the filler tube connection.
5. Remove the setscrews securing the sump.
6. Remove the sump and discard the gasket.
7. Drain the remainder of the fluid from the sump.
8. Clean the sump with paraffin and dry with compressed air.

Transmission removed from the car
1. Position the transmission in the holding fixture RH 7955 (J-8763) with the sump upwards.
2. Carry out Operations 5 to 8 inclusive as described with the transmission fitted in the car.

Sump - To fit
To fit the sump reverse the procedure given for removal noting the following.
1. Ensure a new gasket is fitted.
2. Torque tighten the setscrews to the figures quoted in Chapter P.
3. When filling the transmission with fluid refer to Section T2.

Note
The amount of fluid added depends on whether the intake strainer has been removed.

Intake strainer - To remove
1. Remove the sump.
2. Unscrew and remove the stepped bolt securing the intake strainer to the valve body assembly.
3. Remove the intake strainer assembly.
4. Discard the intake strainer and the 'O' ring from the intake pipe.

Intake strainer - To fit
1. Fit a new 'O' ring onto the intake pipe. Lubricate the 'O' ring with transmission fluid.
2. Ensure a new rubber seal is fitted to the bore in the new intake strainer, then fit the intake pipe into the strainer.

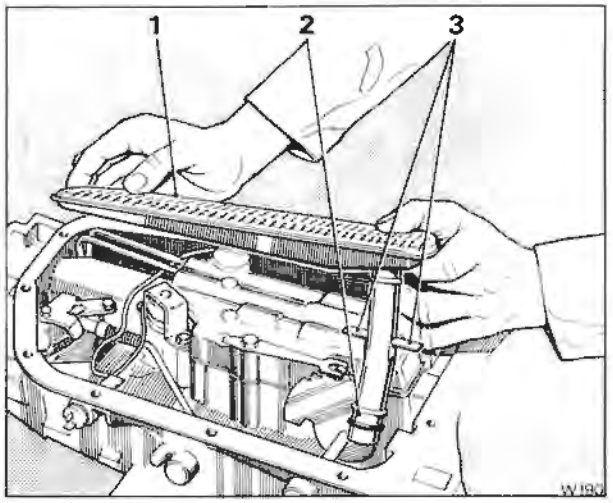

Fig. T46 Removing intake pipe and strainer assembly
1 Strainer assembly
2 Intake pipe with 'O' ring
3 Location tabs

3. Fit the strainer assembly into the transmission case; secure with the stepped bolt. Torque tighten to the figures quoted in Chapter P.
4. Fit the sump and fill with fluid. When filling the transmission with fluid refer to Section T2.

Printed in England
© Rolls-Royce Motors Limited 1980
October 1980
TSD 4200

Section T12

Control valve unit

The control valve unit comprises a cast iron body containing shift valves and regulator valves that control the gear changes. The unit is secured to an oil spacer (guide) plate on the bottom face of the transmission.

Drive range

When the selector lever on the steering column is moved to 'D', the actuator moves the manual valve (through levers and rods) to allow main line oil pressure to be delivered to the forward clutch (see Fig. T47). With the forward clutch applied, mechanical connection between the turbine shaft and the mainshaft is provided. The Low roller assembly becomes effective as the result of power flow through the compound planetary gear arrangement and the transmission is in first gear.

As the speed of the car increases, first gear is no longer suitable and an up-change to second is required.

To initiate the change from first to second, governor pressure (see Section T9) is directed to the end of the 1-2 shift valve. As the car speed increases, governor pressure moves the valve to allow drive oil to apply the intermediate clutch. This makes the intermediate clutch effective and the transmission changes into second gear.

The change to third gear is controlled by the 2-3 shift valve. The operation of the 2-3 shift valve is similar to that of the 1-2 shift valve. Springs acting on the valve tend to hold the valve closed against governor pressure. When the speed of the car is sufficient, the 2-3 shift valve opens and allows intermediate clutch oil to apply the direct clutch. The transmission then moves into third (top) gear. Oil pressure to the direct clutch piston is applied only to a small inner area of the piston in third gear.

Down-change

When the accelerator pedal is released and the car is allowed to decelerate to a stop, the down-changes will occur automatically as the valve springs overcome the diminishing governor pressure.

Delayed up-change

If the hydraulic system was as basic as previously described, the gear change points would always occur at the same road speeds. When accelerating under heavy loads or when maximum performance is required, it is desirable to have the change points occurring at higher road speeds. To achieve this, a modulator valve is used (see Section T8).

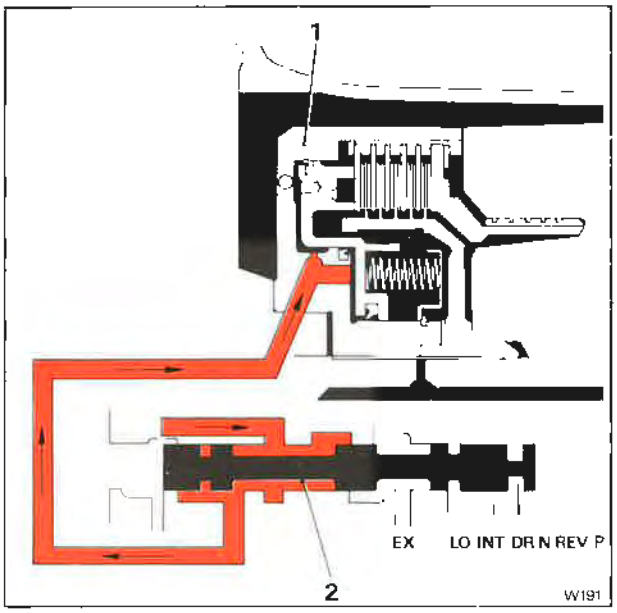

Fig. T47 Manual valve and forward clutch
1 Forward clutch
2 Manual valve

Line oil

Clutch application control

To introduce gearchange 'feel', and to ensure long clutch plate life, the clutch apply pressure is regulated to suit throttle application (see Fig. T48). The intermediate clutch is controlled according to the throttle opening as follows.

Line pressure is varied by the modulator.

A 1-2 accumulator valve train provides a variable accumulator pressure to cushion the clutch application. The 1-2 accumulator valve train is supplied with drive oil and is controlled by modulator pressure. During light throttle application, drive oil is reduced to a low accumulator pressure. During heavy throttle applications, accumulator pressure approaches full main pressure. Accumulator pressure is made to act on one side of the rear accumulator piston in the rear servo (see Section T13). In first gear, the accumulator piston is stroked to its lower position to prepare it for the change to second gear.

When the 1-2 shift valve opens, intermediate clutch apply oil is also directed to the rear servo accumulator piston, stroking the piston against the 1-2 accumulator oil and the accumulator spring

Printed in England
© Rolls-Royce Motors Limited 1980
October 1980
TSD 4200

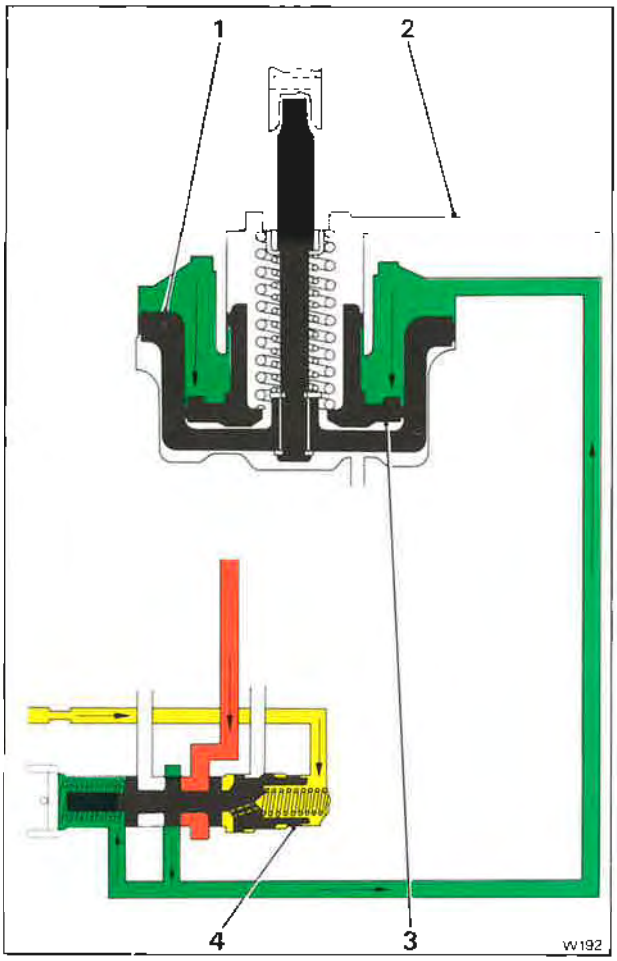

Fig. T48 Rear servo accumulator piston - Prior to 1-2 up-change
1 Servo piston
2 Intermediate clutch passage
3 Accumulator piston
4 1-2 accumulator valve

Drive oil
Modulator oil
1-2 accumulator oil

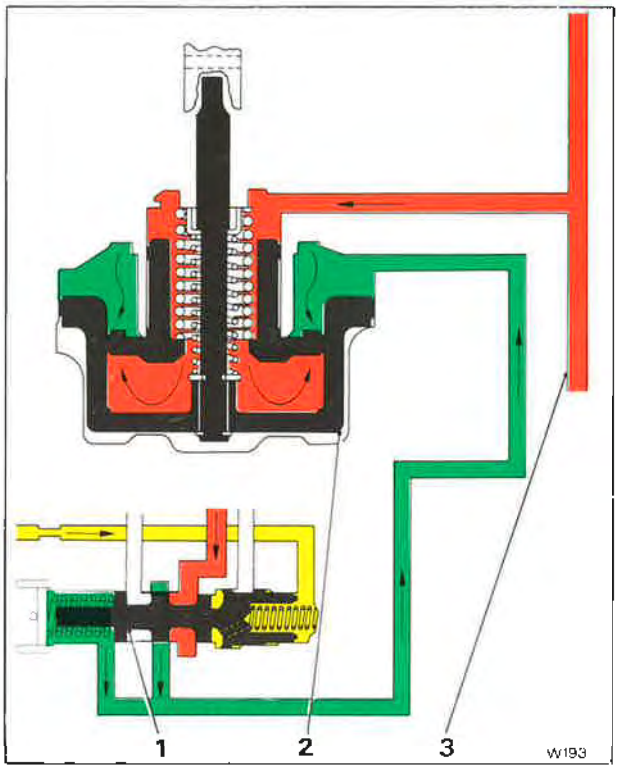

Fig. T49 Rear servo accumulator piston cushioning intermediate clutch application
1 1-2 accumulator valve
2 Servo piston
3 Intermediate clutch passage

Drive and intermediate clutch oil
Modulator oil
1-2 accumulator oil

(see Fig. T49). This action absorbs a small amount of the intermediate clutch apply oil and permits the clutch apply time and pressure to be controlled for the correct gear change feel.

The direct clutch apply rate is controlled by the front accumulator piston. Located in the control valve assembly, it is part of the front accumulator and servo piston system (see Fig. T50). In 'D' range, second gear, the accumulator is stroked against the accumulator spring by servo oil. Because servo oil is main line pressure and varies with the throttle opening, the pressure in the accumulator is varied according to the throttle opening.

When the 2-3 shift valve opens, direct clutch oil flows to the direct clutch and the front accumulator piston (see Fig. T51). Direct clutch pressure rises so that the force from it, plus the accumulator spring force, overcomes the force from the servo pressure and moves the accumulator piston to the stop on the accumulator piston pin. This in turn strokes the servo piston the same amount, allowing it to just contact the band apply washer on the servo pin. However, it will not move the pin or apply the band. The stroking of the accumulator piston absorbs an amount of direct clutch oil and permits the direct clutch to apply at a controlled rate for a smooth 2-3 change.

3-2 valve operation

To take full advantage of the torque converter's ability to multiply torque when required, a 3-2 valve is used. This valve permits the accelerator to be depressed for moderate acceleration at low speeds in third gear without causing the transmission to change down. This allows the torque converter to sense the changes in engine speed and thus provide additional converter ratio for improved performance.

The 3-2 valve system is such that it will permit a 3-2 down-change during moderate to heavy acceleration when modulator pressure reaches approximately 7,59 kgf/sq.cm. (108 lbf/sq.in.) (see Fig. T52). Modulated oil pressure, plus the 3-2 spring pressure, will move the 3-2 valve against the force of direct clutch oil allowing modulator pressure to be directed to the 2-3 modulator valve. Modulator oil can then close the 2-3 valve train against governor pressure causing the part throttle 3-2 down-change.

Forced down-change (kick-down)
At road speeds below approximately 113 k.p.h. (70 m.p.h.) a detent (forced) down-change can be obtained by depressing the accelerator pedal. When the accelerator pedal is fully depressed, the detent valve train takes over from the modulator as the change-point controller.

Main line oil is fed through a small orifice to one end of the detent valve. During normal operation, the port at the orifice end of the valve is sealed by the valve in the detent solenoid assembly. Line pressure thus holds the detent valve in an inoperative or normal position (see Fig. T53).

When the throttle is wide open, an electric micro-switch is closed, energising the detent solenoid. This opens an exhaust port at the solenoid causing a pressure drop on the end of the detent valve. The detent valve is moved by the detent valve regulator valve spring and allows the detent regulator to regulate detent oil to a fixed pressure of approximately 4,92 kgf/sq.cm. (70 lbf/sq.in.).

When the detent valve moves, detent oil is allowed to flow into both the modulator and the detent oil passages to the shift valve trains. The points at which up-changes will then occur is controlled by detent pressure in the modulator passages. Detent down-changes are controlled by detent pressure in the detent passages. These change points are fixed at relatively high speeds by the constant oil pressure.

Detent pressure directed to the 1-2 regulator valve makes a detent 2-1 change available at car speeds below approximately 32 k.p.h. (20 m.p.h.).

To preserve the clutch linings during 1-2 up-changes under full throttle conditions, detent oil is directed to the 1-2 accumulator valve to increase 1-2 accumulator pressure (see Fig. T54).

Detent oil is also directed to the modulator valve to prevent modulator pressure from falling below 4,92 kgf/sq.cm. (70 lbf/sq.in.). This prevents main line pressure from falling below approximately 7,38 kgf/sq.cm. (105 lbf/sq.in.) regardless of altitude or car speed.

Intermediate range

When the selector lever is moved to the Intermediate 'I' position, the manual valve is moved to uncover a passage which will allow intermediate range oil to act on the 2-3 shift valve. Intermediate oil pressure

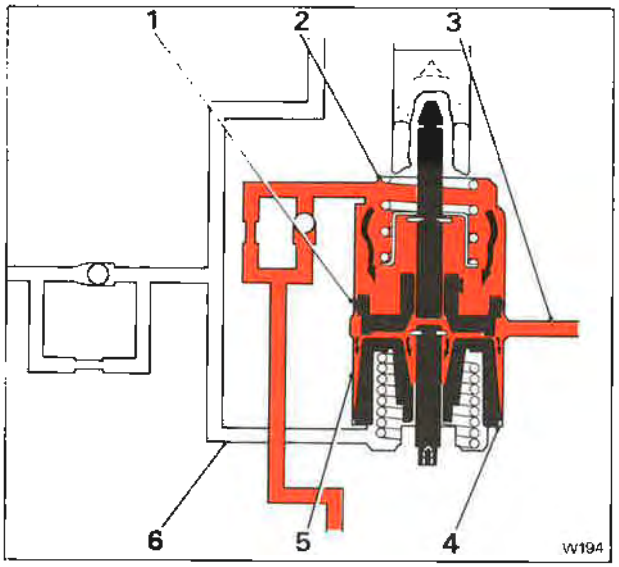

Fig. T50 Front servo accumulator piston - Prior to 2-3 up-change
1 Servo piston
2 Case
3 Intermediate clutch passage
4 Accumulator piston
5 Valve body
6 Direct clutch oil passage

Servo and intermediate clutch oil

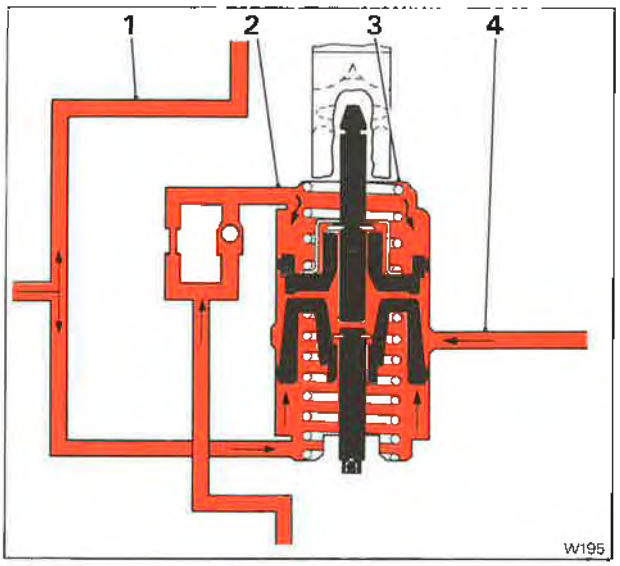

Fig. T51 Front servo accumulator piston cushioning direct clutch application
1 Direct clutch oil
2 Servo oil
3 Accumulator housing
4 Intermediate clutch oil

Direct clutch, front servo and intermediate clutch oil

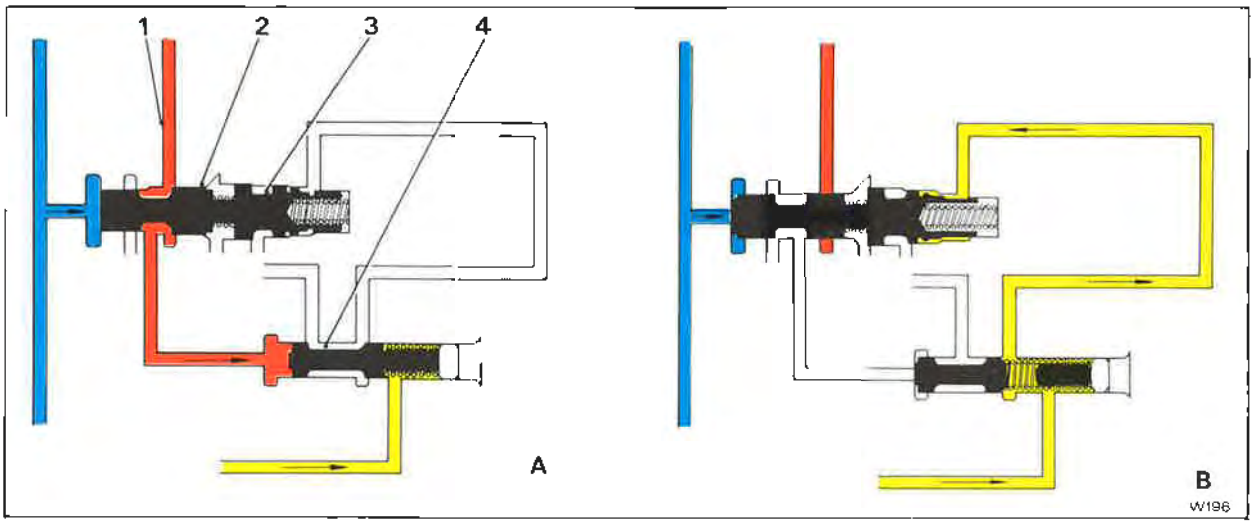

Fig. T52 Part throttle down-change (3-2)

1 Intermediate clutch oil
2 2-3 valve
3 2-3 modulator valve
4 3-2 valve

A Valves in 3rd gear position, modulator pressure below approximately 7,59 kgf/sq.cm. (108 lbf/sq.in.)
B Part throttle down-change valves in 2nd gear position, modulator pressure above 7,59 kgf/sq.cm. (108 lbf/sq.in.)

Intermediate clutch and direct clutch oil

Governor oil

Modulator oil

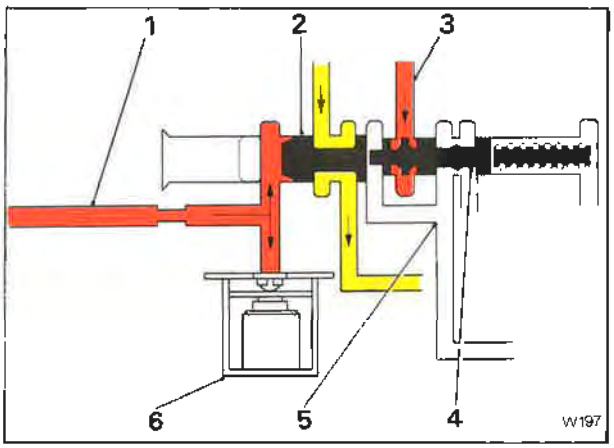

Fig. T53 Detent valve closed

1 Line oil
2 Detent valve
3 Drive oil
4 Detent regulator valve
5 Detent oil passage
6 Detent solenoid

Line and drive oil

Modulator oil

on the 2-3 shift valve will cause the valve to move and the transmission will change down, regardless of car speeds (see Fig. T55).

To provide overrun engine braking, the front band

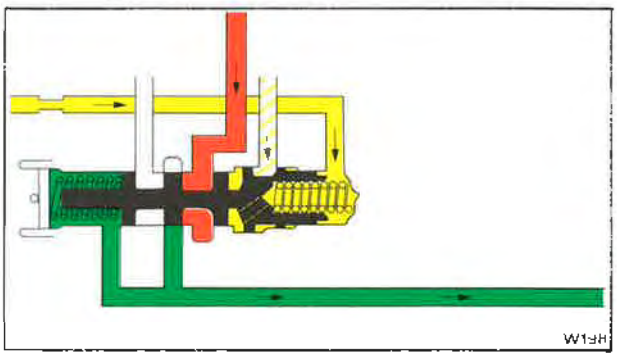

Fig. T54 1-2 Accumulator valve

Drive oil

Modulator oil

1-2 accumulator oil

Detent oil

is applied by the front servo. Intermediate clutch oil flows to the apply side of the servo piston. An orifice is incorporated in the flow path to ensure a smooth piston movement and band application. Intermediate range oil is directed to a check ball which allows the oil to enter the modulator passage leading to the pressure regulator boost valve. The

resultant increase of pressure on the end of the boost valve raises main line pressure to 10,55 kgf/sq.cm. (150 lbf/sq.in.) and provides sufficient holding forces for overrun engine braking.

Low range

When the selector lever is moved to the 'L' range position, the manual valve is moved to allow Low range oil to flow to the detent regulator valve and

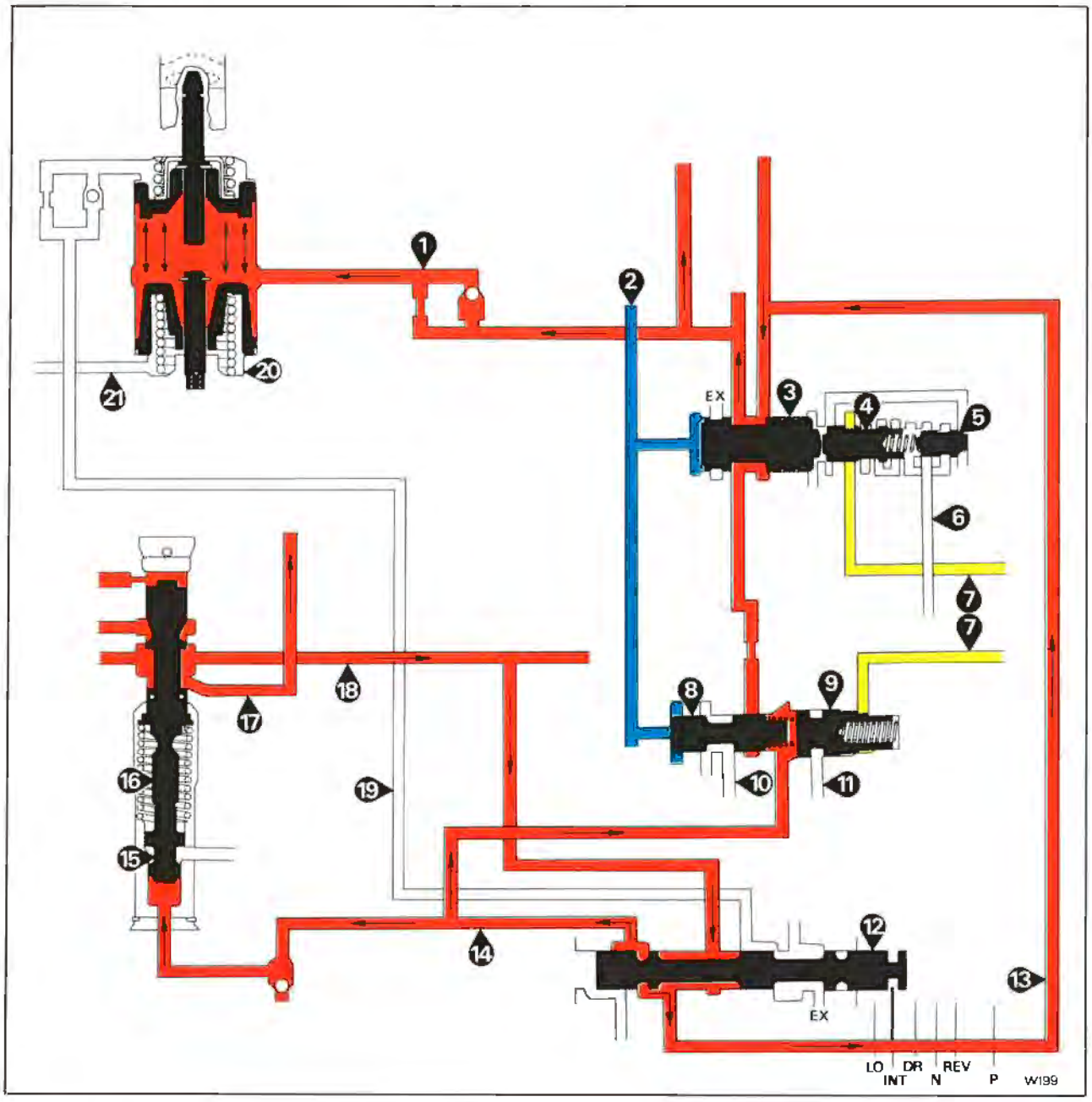

Fig. T55 Valves - Intermediate range - 2nd gear

1 Intermediate clutch oil
2 Governor oil
3 1-2 valve
4 1-2 detent valve
5 Regulator valve
6 Detent passage
7 Modulator oil
8 2-3 valve
9 2-3 modulator valve
10 Direct clutch passage
11 Detent passage
12 Manual valve
13 Drive oil
14 Intermediate oil
15 Boost valve
16 Pressure regulator valve
17 Converter oil
18 Line oil
19 Servo oil passage
20 Front servo
21 Direct clutch passage

Main line oil
Governor oil
Modulator oil

Printed in England
© Rolls-Royce Motors Limited 1980
October 1980
TSD 4200

spacer pin. The spring behind the regulator valve then moves the regulator and detent valves to the opposite end of the valve bore. Low range oil then prevents the regulator valve from regulating and drive oil passes through the hole in the regulator valve into the detent and modulator passages at a Low range pressure of 10,55 kgf/sq.cm. (150 lbf/sq.in.). As a result of this, the 1-2 shift valve will move to cause a down-change at road speeds below approximately 64 k.p.h. (40 m.p.h.) and will prevent an up-change, regardless of the speed of the car.

When the 1-2 shift valve closes, the exhausting intermediate clutch oil lifts two check balls off their seats to enable the front band and the intermediate clutch to release quickly (see Fig. T56).

To provide overrun engine braking, the rear band is applied by directing Low range oil pressure to the rear servo.

Low range oil is directed to the 1-2 accumulator valve during Low range operation to raise 1-2 accumulator pressure to line pressure. The increased pressure, directed to the rear servo accumulator piston, resists servo apply pressure. This slows down the application of the rear band to enable a smooth change to be obtained during manual change to Low range, first gear, or for a 2-1 change in Low range.

Reverse

When Reverse 'R' is selected, the manual valve is moved to allow Drive, Intermediate, and Low range oil to be exhausted, and allows main line oil to enter the reverse passages (see Fig. T57). Reverse oil pressure is directed from the manual valve to the large outer area of the direct clutch piston and

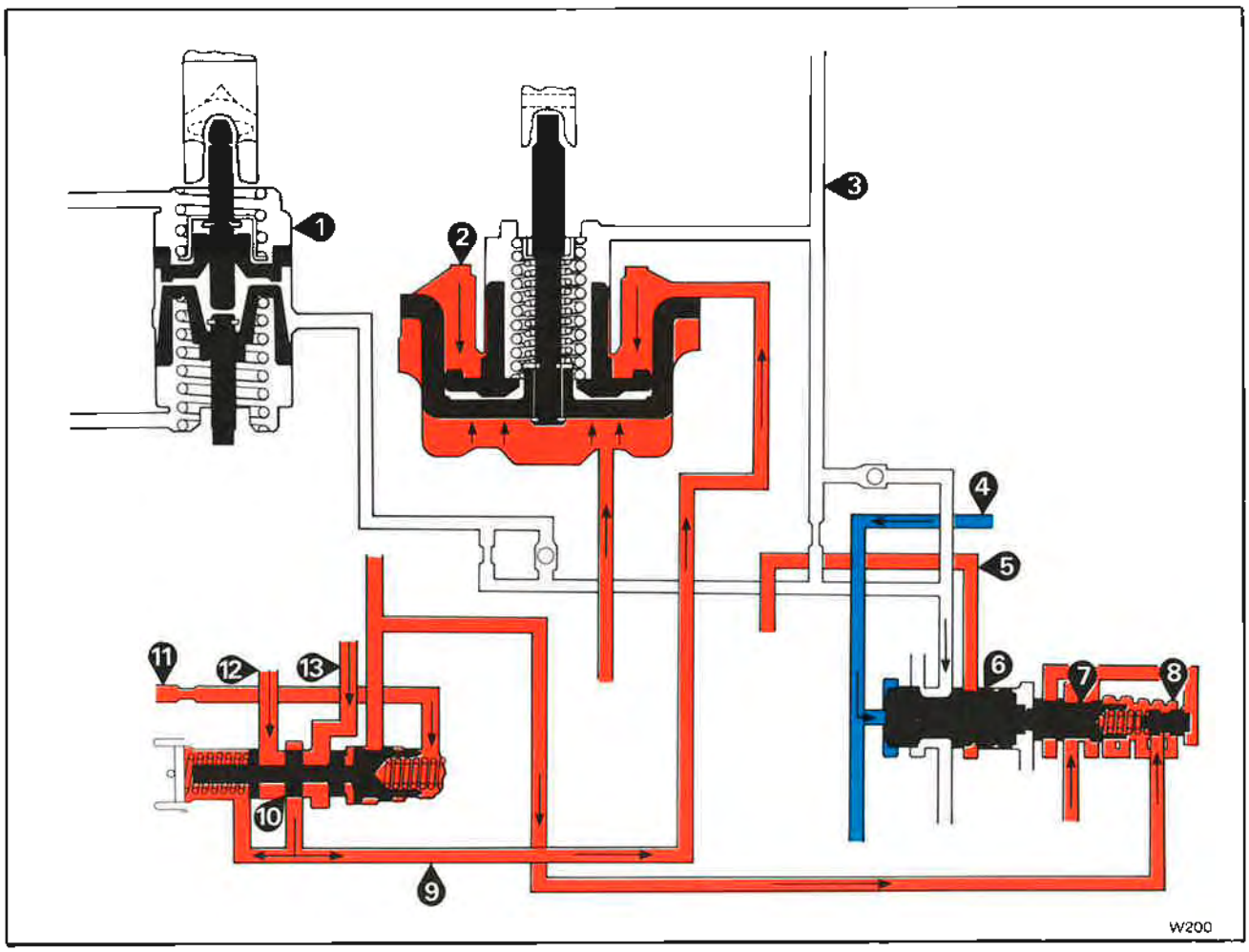

Fig. T56 Low range - 1st gear - rear band applied

1 Front servo
2 Rear servo
3 Intermediate clutch passage
4 Governor oil
5 Drive oil
6 1-2 valve
7 1-2 detent valve
8 Regulator valve
9 1-2 accumulator oil
10 1-2 accumulator valve
11 Modulator oil
12 Low oil
13 Drive oil

Main line oil
Governor oil

to the 2-3 shift valve where it enters the direct clutch exhaust port. Reverse oil then flows past the 2-3 shift valve, which is in the down-change position, and enters the third gear direct clutch apply passage. This passage directs reverse oil pressure to the small inner area of the direct clutch piston. With oil pressure on both inner and outer positions of the piston, the clutch applies. Reverse oil pressure is also directed to a check ball which allows oil to enter the same passage to the rear servo apply piston that Low range oil occupied in Low range; this applies the rear band. To ensure adequate oil pressure for the torque requirements in Reverse, reverse oil pressure is directed to the pressure boost valve which increases line pressure to a maximum of approximately 18,28 kgf/sq.cm. (260 lbf/sq.in.).

Control valve unit - To remove

Note

Before removing the control valve unit from a transmission installed in a vehicle, **take extreme care,** as the front servo piston and related parts may fall from the transmission due to the normal freeness of the 'Teflon' oil sealing rings.

The control valve unit may be removed with the transmission in the car. The oil must be drained

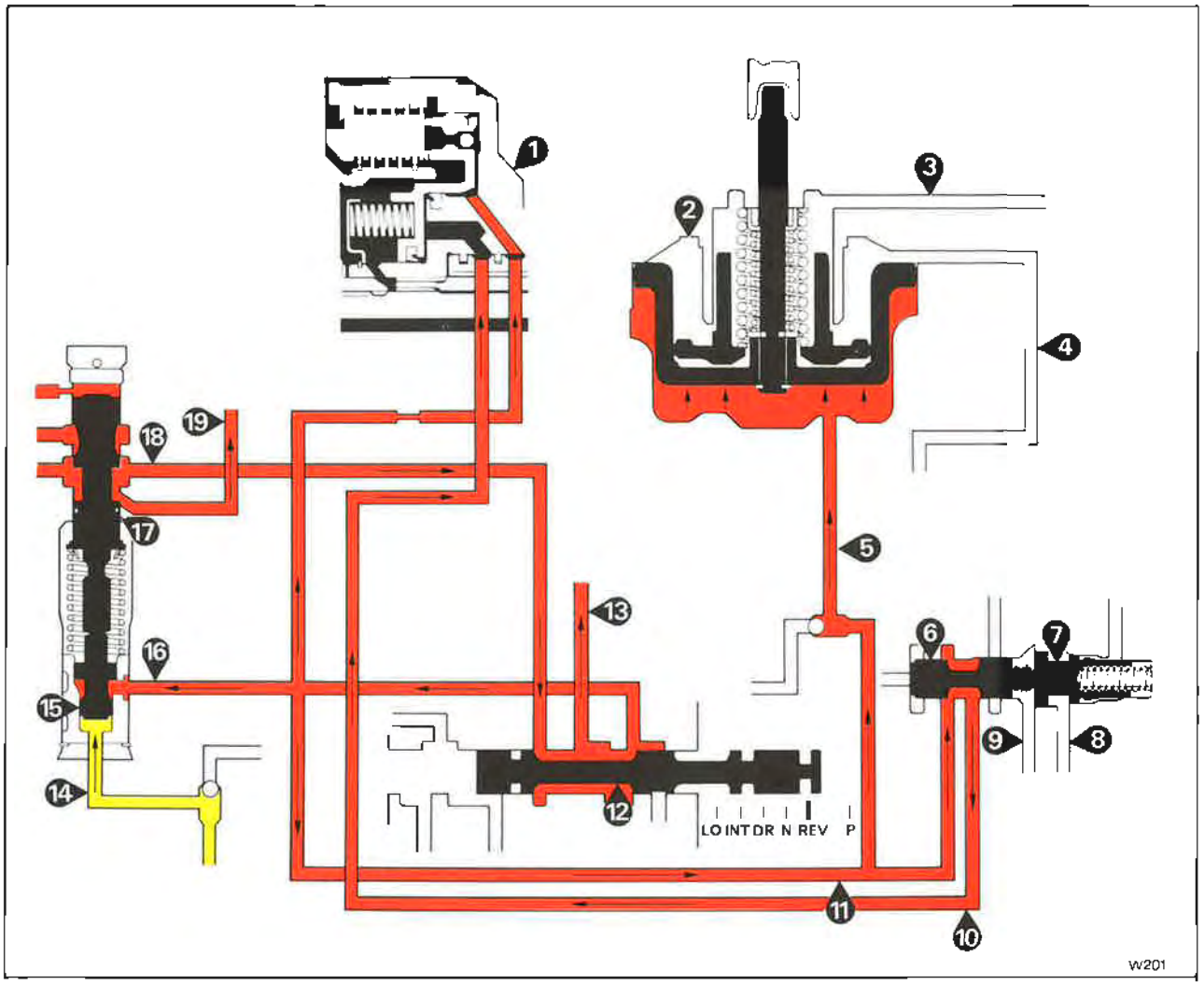

Fig. T57 Reverse - rear band applied

1 Direct clutch
2 Rear servo
3 Intermediate clutch passage
4 1-2 accumulator passage
5 Reverse oil
6 2-3 valve
7 2-3 modulator valve
8 Detent oil passage
9 Intermediate oil passage
10 Direct clutch oil
11 Reverse oil
12 Manual valve
13 Servo oil
14 Modulator oil
15 Boost valve
16 Reverse oil
17 Pressure regulator valve
18 Line oil
19 Converter oil

Modulator or intermediate oil

Main line oil

Printed in England
© Rolls-Royce Motors Limited 1980
October 1980
TSD 4200

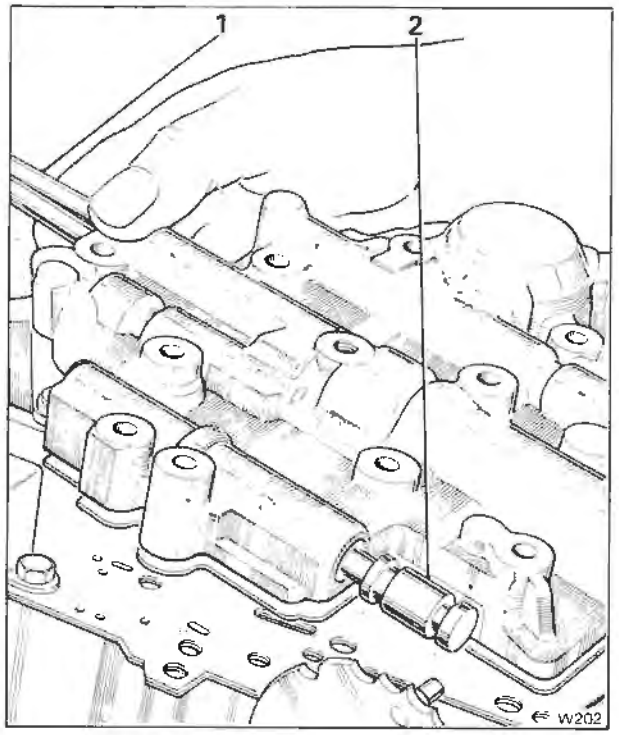

Fig. T58 Removing the control valve unit
1 Governor pipes
2 Manual valve

and the sump removed to gain access to the control valve unit.

1. Unscrew the setscrew which secures the detent spring and roller assembly. Remove the spring and roller assembly.

2. Remove the setscrews that secure the control valve unit to the transmission case.

Do not remove the solenoid securing screws, as the solenoid holds the spacer (guide) plate and gasket in position, therefore, keeping the check balls in their correct positions.

3. Remove the control valve unit, together with the two governor pipes (see Fig. T58).

Caution
Ensure that the manual valve does not slide out of its bore. Take care to retain the front servo piston, should it come out with the control valve assembly.

Remove the governor screen assembly from the end of the governor feed pipe or governor feed pipe hole.

4. Withdraw the governor pipes from the control valve assembly; the pipes are interchangeable and need not be marked for identification.

Control valve unit - To dismantle

1. Hold the control valve unit with the cored passages uppermost and the accumulator piston bore to the front, as shown in Figure T59.

2. Remove the manual valve from its bore.

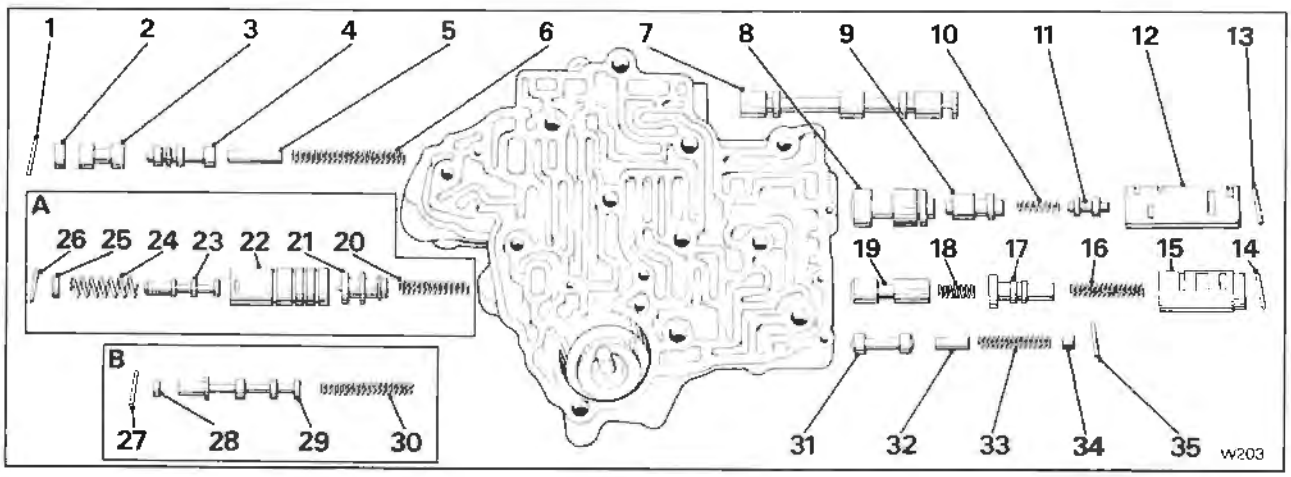

Fig. T59 Control valve unit

1 Retaining pin
2 Bore plug
3 Detent valve
4 Detent regulator valve
5 Spacer
6 Detent spring
7 Manual valve
8 1-2 valve
9 1-2 detent valve
10 1-2 regulator spring
11 1-2 regulator valve
12 1-2 sleeve
13 Retaining pin
14 Retaining pin
15 2-3 sleeve
16 2-3 valve spring
17 2-3 modulator valve
18 3-2 intermediate spring
19 2-3 valve
20 1-2 accumulator primary spring
21 1-2 accumulator primary valve
22 1-2 accumulator sleeve
23 1-2 accumulator secondary valve
24 1-2 accumulator secondary spring
25 Bore plug
26 Retaining pin
27 Retaining pin
28 Bore plug
29 1-2 accumulator valve
30 1-2 accumulator spring
31 3-2 valve
32 Spacer
33 3-2 spring
34 Bore plug
35 Retaining pin
A RR and RS models
B RC model

3. Fit the control valve accumulator installing tool (J-21885) onto the accumulator piston.
4. Compress the accumulator piston and remove the 'E' ring container.
5. Remove the accumulator control valve and spring.
6. Remove the retaining pin, 1-2 sleeve, regulator valve and spring from the upper right-hand bore.
7. Remove the 1-2 detent valve and the 1-2 valve.
8. Remove the retaining pin, 2-3 valve spring, 2-3 sleeve, 2-3 modulator valve and the 3-2 intermediate spring from the middle right-hand bore.
9. Remove the 2-3 shift valve.
10. Remove the retaining pin, bore plug, 2-3 spring together with the spacer and the 3-2 valve from the lower bore.
11. Remove the retaining pin and bore plug from the upper left-hand bore, adjacent to the manual valve bore.
12. Remove the detent valve, detent regulator valve, spring and spacer.
13. Ensure that the 1-2 accumulator valve in the remaining bore is free, by moving the valve against the spring.
14. Remove the 1-2 accumulator valve retaining pin from the machined surface of the valve body; remove the plug.
15.(a) RR and RS transmissions
(i) Remove the 1-2 accumulator secondary spring and 1-2 valve.
(ii) Remove the 1-2 accumulator sleeve, 1-2 primary valve and spring.
15.(b) RC transmissions
(i) Remove the 1-2 accumulator valve and spring.

Control valve unit - To inspect
1. Wash the control valve unit body, valves and the remainder of the parts in Genklene. **Do not allow the valves to knock together as this may cause burrs, or damage to the shoulders of the valves.**
2. Examine all valves and sleeves to ensure that they are free from dirt. Any burrs should be carefully removed with a fine stone, or fine emery paper slightly moistened with oil. Do not round-off the shoulders of the valves.
3. When satisfactory, wash the parts and lightly smear all valves and sleeves with clean transmission fluid.
4. All valves and sleeves should be tested in their individual bores to ensure that free movement is obtainable.
5. The valves should fall under their own weight, with perhaps a slight tapping of the valve body to assist them. During these checks, ensure that the valves and valve bores are not damaged.
6. The manual valve is the only valve that can be renewed separately. If other valves are damaged or defective, a new control valve unit must be fitted.
7. Examine the valve body for cracks or scored bores.
8. Ensure that the cored face is free from damage.

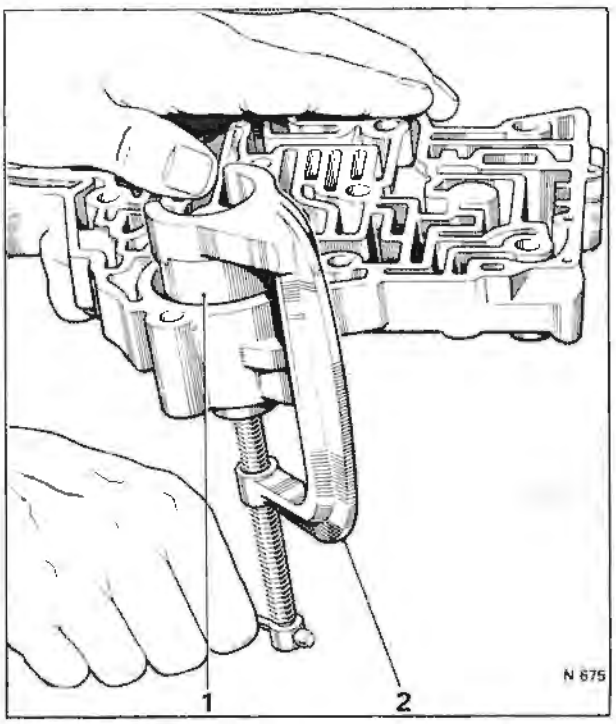

Fig. T60 Fitting the front accumulator piston and spring
1 Accumulator piston
2 Inserting tool

9. Examine all springs for collapsed or distorted coils.

Control valve unit - To assemble
Before commencing assembly, ensure that all springs can be positively identified. If the springs are assembled incorrectly the transmission will not function correctly. Refer to Figure T59 during assembly procedure.
1. Lightly lubricate all parts with clean transmission fluid before assembly.
2. Fit the front accumulator spring and piston into the valve body.
3. Fit the valve body accumulator installing tool (J-21885). Align the piston and spring with the bore then compress the spring and piston (see Fig. T60).
4. Secure the piston with the 'E' ring retainer.
5.(a) RR and RS transmissions
(i) Fit the 1-2 primary spring into the primary 1-2 accumulator valve.
(ii) Fit the spring and valve into the lower left-hand bore. Use a retaining pin to hold the valve in its position.
(iii) Fit the 1-2 accumulator valve into the 1-2 accumulator sleeve. Fit the sleeve into its bore.
(iv) Fit the bore plug and retaining pin.
5.(b) RC transmissions
(i) Fit the 1-2 accumulator primary spring and 1-2 accumulator valve.
(ii) Fit the bore plug and retaining pin.

Printed in England
© Rolls-Royce Motors Limited 1980

6. Fit the detent spring and spacer into the next left-hand bore above.

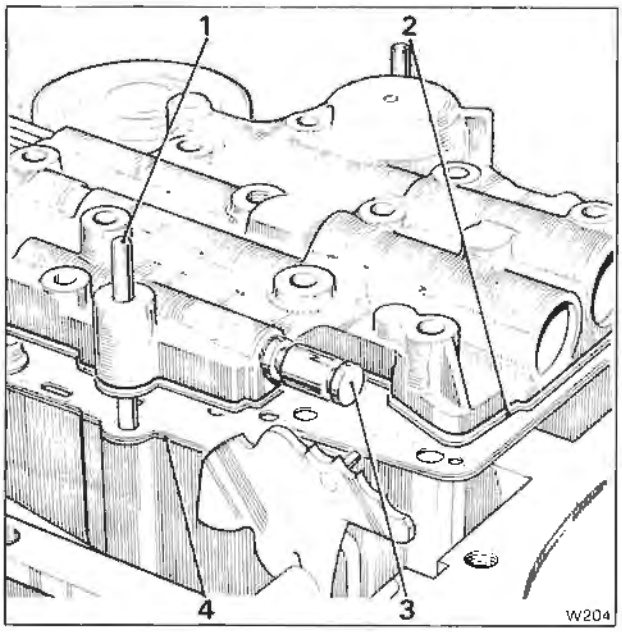

Fig. T61 Fitting the control valve unit
1 Guide pin
2 Control valve gasket
3 Manual valve
4 Spacer (guide) plate gasket

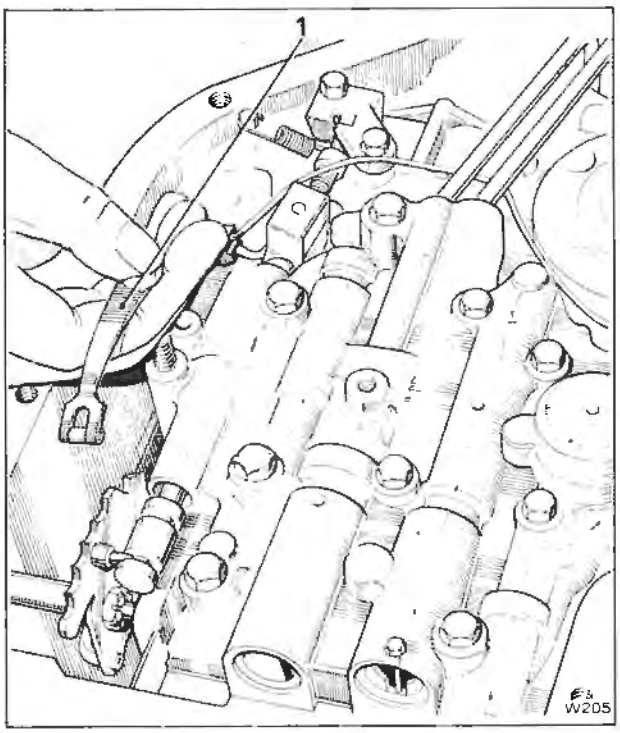

Fig. T62 Fitting the detent spring and roller
1 Detent spring and roller

7. Compress the spring and hold it with a small screwdriver.
8. Fit the detent regulator valve, wide land first.
9. Fit the detent valve, small land first.
10. Fit the bore plug with the hole facing the outside and fit the retaining pin. Remove the screwdriver.
11. Fit the 3-2 valve into the lower right-hand bore.
12. Fit the spacer, the 3-2 spring and bore plug with the hole facing the outside; secure with the retaining pin.
13. Fit the 2-3 shift valve, with the stem facing the outside, in the next right-hand bore above.
14. Fit the 3-2 intermediate spring.
15. Fit the 2-3 modulator valve into the sleeve, then fit both parts into the valve bore.
16. Fit the 2-3 valve spring and the retaining pin.
17. Fit the 1-2 shift valve (stem end out) into the next right-hand bore above.
18. Fit the 1-2 regulator valve (larger stem first), spring and detent valve into the sleeve. Align the spring in the bore of the detent valve. Fit the parts into the valve bore.
19. Push the sleeve inwards against spring pressure and fit the retaining pin.
20. Fit the manual valve with the detent pin groove to the right-hand side (outmost).

Control valve unit - To fit
1. Fit the governor pipes to the control valve unit.
Note
Fit the governor screen assembly, **open end first** into the governor feed pipe hole (hole nearest the centre of transmission).
2. Fit the front servo piston (if removed) ensuring it is correctly aligned in the bore.
3. Using two guide pins screwed into the casing, fit the control valve unit into position (see Fig. T61), with a new valve body/spacer plate gasket.
4. Ensure that the gasket and oil spacer (guide) plate are correctly positioned.
Note
It is important that only a gasket which is a genuine service part be used.
5. Ensure that the governor pipes are correctly aligned and the feed pipe fits over the governor screen.
6. When installing the governor assembly ensure that a clearance of approximately 6,40 mm. (0.250 in.) is maintained between the governor pipes and transmission case, at a point 25,40 mm. (1 in.) from the right-angle bend of the pipes.
Ensure that the manual valve is correctly located by the pin on the detent lever.
7. Remove the guide pins and fit the control valve unit securing setscrews; do not fit the detent spring and roller securing screw.
8. Torque tighten the securing screws (see Chapter P).
9. Fit the detent spring and roller assembly (see Fig. T62); fit the securing screw and torque tighten to the figures quoted in Chapter P.

Printed in England
© Rolls-Royce Motors Limited 1980

Section T13

Rear servo

The rear servo comprises an assembly of pistons and springs. It fits onto the bottom face of the transmission casing, adjacent to the control valve unit and is secured by six setscrews. The purpose of the servo is to act as an accumulator to absorb an amount of intermediate clutch oil, thus cushioning the application of the clutch, also to apply the rear friction band in Low range and Reverse.

Drive - Intermediate - first gear
In first gear, Drive and Intermediate ranges, 1-2 accumulator oil is directed to the rear servo accumulator piston in preparation for the 1-2 up-change.

Drive - Intermediate - second gear
Intermediate clutch apply oil is directed to the rear servo accumulator piston, stroking the piston against the 1-2 accumulator oil and the accumulator spring (see Fig. T63). This action absorbs an amount of intermediate clutch apply oil and permits the intermediate clutch to apply at reduced pressure for a smooth 1-2 up-change.

Low range - first gear
Overrun engine braking in Low range (first gear) is provided by the rear servo which applies the rear band and prevents the reaction carrier from rotating clockwise (see Fig. T64).

The 1-2 accumulator oil is directed to the accumulator piston which attempts to prevent application of the servo. Low range oil is directed to the servo piston which, because it has a larger area, applies the rear band. Because 1-2 accumulator oil is present and is opposing the movement of the piston, the pressure applying the rear band is reduced. This provides a smooth band application.

Low range - second gear
In second gear the rear band is released. Intermediate clutch oil is directed to the release side of the servo piston and together with line oil in the 1-2 accumulator oil passage, balances out the Low range oil on the apply side of the servo piston (see Fig. T65). The servo release spring then strokes the servo piston to the band release position.

Reverse
In Reverse, the rear band is applied to hold the reaction carrier. Reverse oil is directed to the servo piston to apply the band (see Fig. T66). To ensure that the rear band will hold the reaction carrier for the reverse gear ratio, line pressure is increased. No other oil pressures are present in the servo to resist the movement of the servo piston.

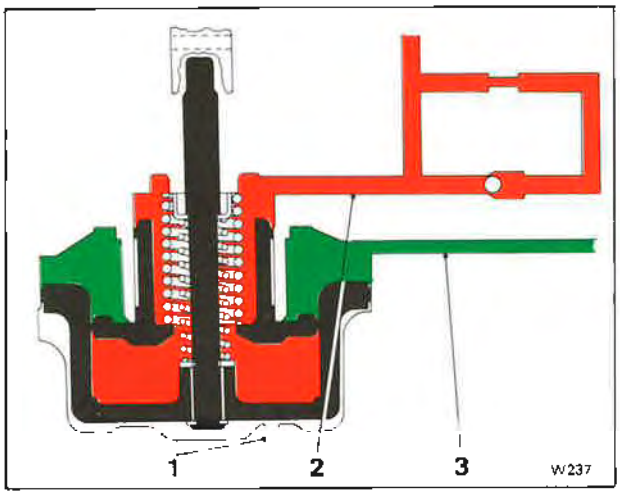

Fig. T63 Drive and Intermediate - 2nd gear
1 Reverse or low oil
2 Intermediate clutch oil
3 1-2 accumulator oil

Intermediate clutch oil

1-2 accumulator oil

Rear servo - To remove
The rear servo can be removed whether the transmission is fitted to the car or not.
1. Remove the sump (see Section T11).
2. Remove the control valve unit (see Section T12).
3. Remove the setscrews that secure the servo cover to the transmission casing.
4. Remove the cover and discard the gasket.
5. Remove the servo unit from the casing (see Fig. T67).
6. Remove the servo accumulator spring.

To ensure that the rear band is correctly adjusted when the rear servo is fitted, the apply pin must be checked as follows.

Rear band apply pin - To select
1. Fit the band apply pin selector gauge (J-21370-6) onto the bottom face of the transmission casing. The gauge must fit over the rear servo bore with the hexagonal nut on the side of the gauge facing the parking linkage. The smaller diameter end of the gauge pin (J-21370-5) should be positioned in the servo pin bore (see Fig. T68).
2. Secure the gauge with two suitable setscrews (e.g. rear servo cover screws) and torque tighten them to the figures quoted in Chapter P.

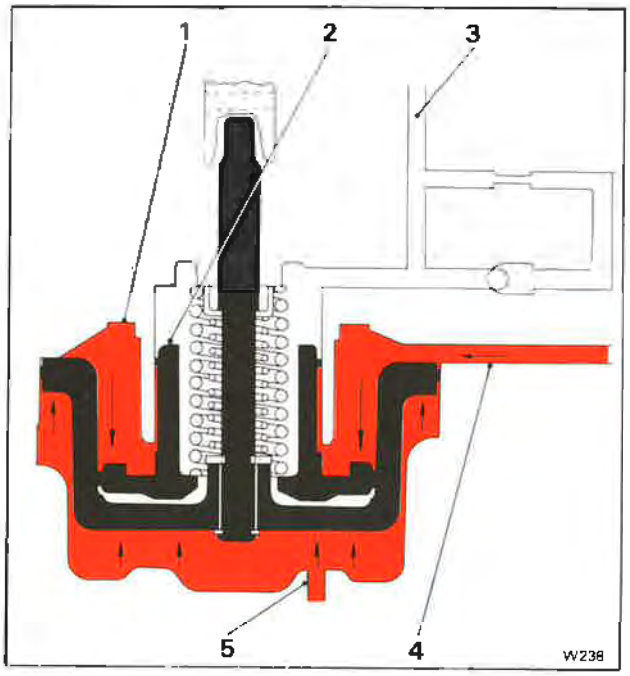

Fig. T64 Low range - 1st gear
1 Rear servo
2 Accumulator piston
3 Intermediate clutch passage
4 1-2 accumulator oil
5 Reverse or low oil

Low and 1-2 accumulator oil

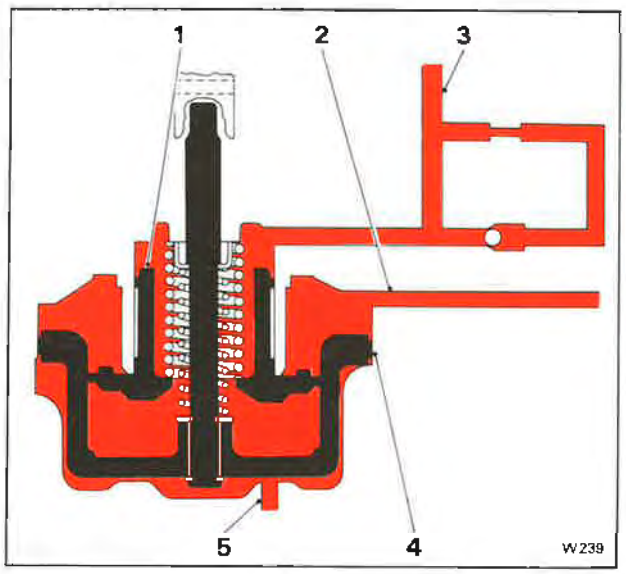

Fig. T65 Low range - 2nd gear
1 Accumulator piston
2 1-2 accumulator oil
3 Intermediate clutch oil
4 Servo piston
5 Reverse or low oil

Low, intermediate and 1-2 accumulator oil

3. Ensure that the stepped gauge pin moves freely in the tool and in the servo pin bore. The stepped side of the pin must face the front of the transmission case.
4. Band apply pins are available in three sizes as shown in the following chart.

Identification	Length
Three rings	Long
Two rings	Medium
One ring	Short

5. The identification ring is located on the band lug end of the pin. Selecting the correct pin is the equivalent of adjusting the rear band.
6. To determine the correct size pin to use, apply 3,46 kgf.m. (25 lbf.ft.) to the hexagonal nut on the side of the gauge (see Fig. T68). This will cause the lever on top of the gauge to depress the stepped gauge pin into the servo pin bore, simulating the actual operation of the servo.
7. Note the relationship between the steps on the gauge pin and the machined surface on the top of the gauge.
8. If the machined surface on top of the gauge is level with, or above the upper step on the gauge pin, a long (3 rings) pin is required.

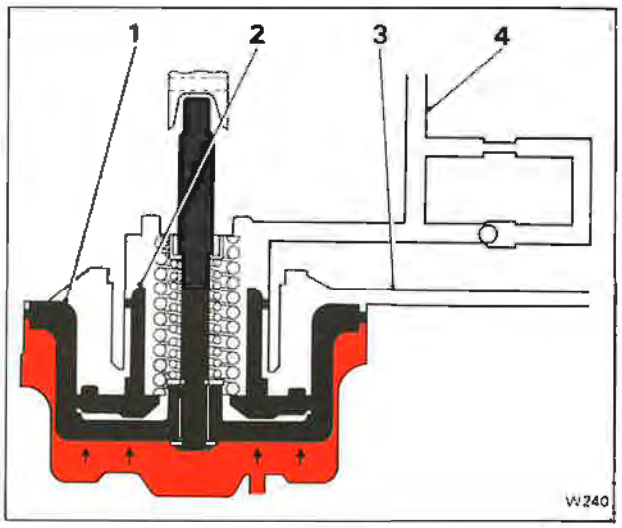

Fig. T66 Rear servo in reverse position
1 Servo piston
2 Accumulator piston
3 1-2 accumulator passage
4 Intermediate clutch passage

Reverse oil

9. If the machined surface on top of the gauge is between the upper and lower steps on the gauge pin, a medium pin (2 rings) is required.
10. If the machined surface on top of the gauge is level with, or below the lower step on the gauge pin, a short (1 ring) pin is required
11. If a new pin is required, make a note of the size of the required pin, then remove the gauge from the transmission.

Rear servo - To dismantle
1. Remove the rear accumulator piston from the rear servo piston (see Fig. T69).
2. Remove the 'E' ring which retains the rear servo piston on the band apply pin.
3. Remove the rear servo piston and the seal from the band apply pin.
4. Remove the washer, spring and retainer.

Rear servo - To inspect
1. Check the fit of the oil sealing rings in the accumulator piston. The rings should be free to turn in the grooves.
2. Fit the accumulator piston lower oil sealing ring into its bore in the casing and check the ring-to-bore fit.
3. Check the fit of the band apply pin in each piston.
4. Examine the band apply pin for scores, cracks or the opening of drilled passages.
5. Examine the accumulator piston for an open bleed passage.
6. Ensure that the pin is the correct size as determined by the check under the heading 'Rear band apply pin - To select'.

Rear servo - To assemble
1. Fit the spring retainer, spring and washer onto the band apply pin.
2. Fit the servo piston onto the pin and secure it with the 'E' ring.
3. If necessary, fit a new oil seal ring onto the servo piston.
4. Fit the accumulator piston into the servo piston.

Do not remove the teflon oil seal rings from the rear accumulator piston, unless they require replacement.

If the teflon inner oil seal ring (small diameter) requires replacement, use the aluminium oil seal ring.

The rear accumulator piston (large diameter) ring groove depth, is machined shallower to take the teflon oil seal ring. Therefore, if replacement is necessary, use only the teflon oil seal ring.

Rear servo - To fit
1. Using clean transmission fluid, lightly lubricate the inner and outer rear servo bores in the transmission casing.
2. Fit the servo accumulator spring into the servo inner bore.

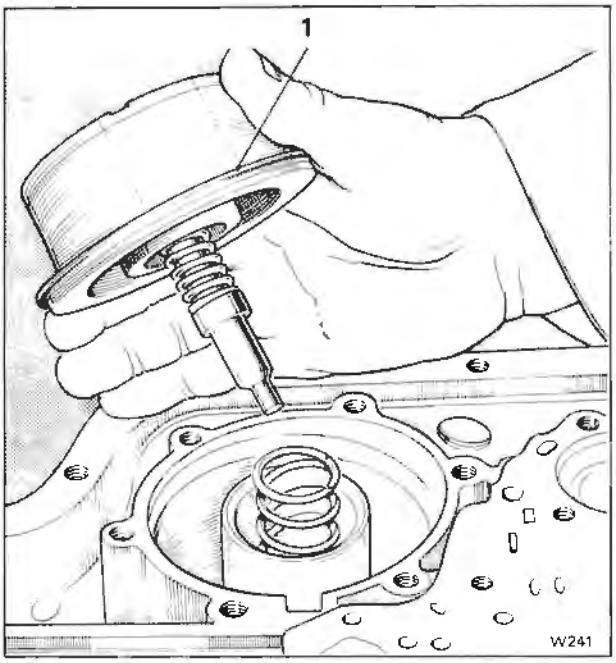

Fig. T67 Removing the rear servo
1 Rear servo

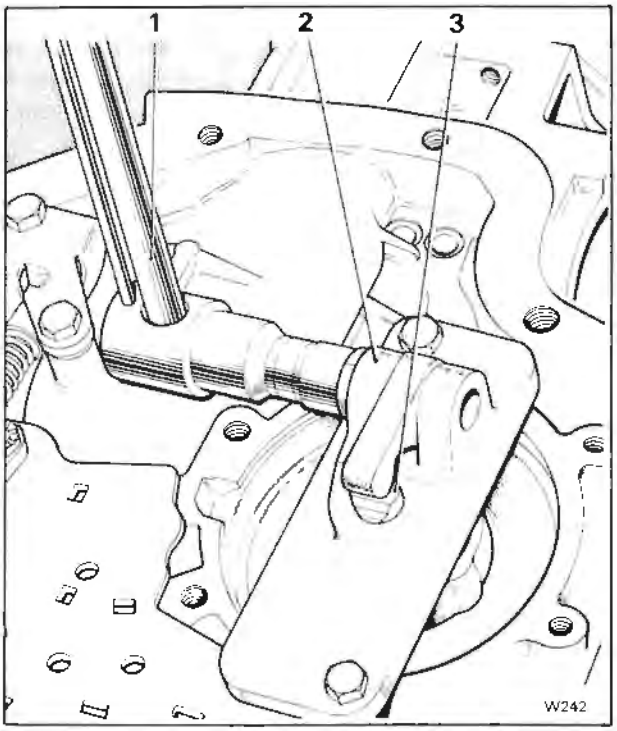

Fig. T68 Selecting the band apply pin
1 Torque spanner
2 Gauge
3 Gauge pin

Note
Before fitting the rear servo to the casing, ensure that the rear band apply lug is aligned with the servo pin bore in the transmission casing. If the lug is not aligned, the servo will not apply the rear band.

Printed in England
© Rolls-Royce Motors Limited 1980

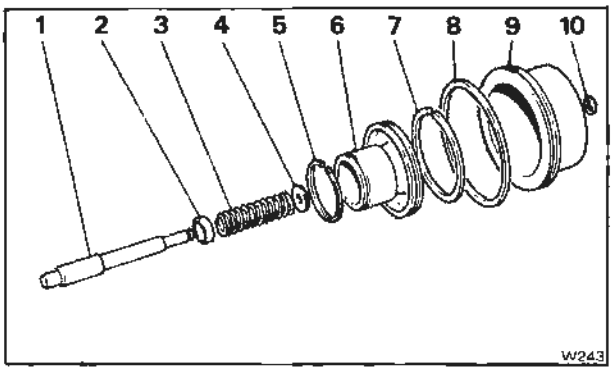

Fig. T69 Rear servo and accumulator - exploded

1 Servo pin
2 Spring retainer
3 Servo spring
4 Washer
5 Oil sealing ring
6 Accumulator piston
7 Oil sealing ring
8 Servo oil seal
9 Servo piston
10 'E' ring

3. Position the rear servo assembly in the transmission casing.
4. Using hand pressure, push the servo into the transmission casing, ensuring that the servo piston sealing ring is correctly seated in the bore.
5. Fit a new gasket and fit the cover.
6. Torque tighten the setscrews to the figures quoted in Chapter P.

Section T14

Detent solenoid, control valve spacer and front servo

The detent solenoid is secured to the lower face of the transmission casing and is connected by a lead to a connector on the left-hand side of the transmission. When the solenoid receives a signal from a micro-switch at full throttle (kick-down button depressed) a valve is caused to move and an exhaust port is opened behind the detent valve. This allows the detent valve spring to move the detent valve and allow oil at high pressure to be fed to the shift valves to oppose governor pressure (see Section T12).

The control valve spacer fits between the control valve unit and the transmission casing and forms part of the hydraulic system which contains restrictors and check balls.

The front servo is an assembly of pistons and springs, similar to the rear servo. It fits partly in the transmission casing and partly in the control valve unit. The servo applies the front band in Intermediate range (second gear) and Low range to provide engine braking. It is used also as an accumulator for the application of the direct clutch and in conjunction with the check balls and orifices, is part of the timing for the release of the direct clutch.

Front servo operation

Drive range - first gear

In Drive range, servo oil from the manual valve charges the accumulator by stroking both the accumulator piston and the servo piston against the accumulator spring. This prepares the accumulator for the controlled application of the direct clutch during the 2-3 up-change. The charging of the accumulator in Drive range (first gear) also makes it possible to have a controlled 1-3 let-up change as the accumulator is prepared in first gear for direct clutch application.

Servo oil and the servo release spring prevent the application of the band in second gear (Drive range) when intermediate clutch apply oil is directed between the servo and accumulator pistons. Servo oil is also present in Reverse and Neutral.

Drive range - second gear

In Drive range (first and second gears), the accumulator is charged with servo oil which strokes the servo and accumulator pistons down against the accumulator spring (see Fig. T70). In second gear, intermediate clutch oil is fed between the servo and accumulator pistons but does not force them apart. This is because the force of the servo oil which holds the piston down is equal to the intermediate clutch oil attempting to stroke the piston up.

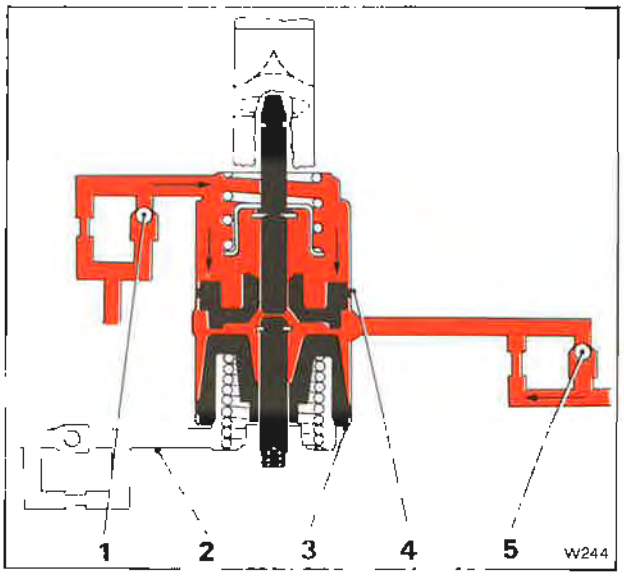

Fig. T70 Drive range - 2nd gear

1 Servo oil (check ball seated)
2 Direct clutch passage
3 Accumulator piston
4 Servo piston
5 Intermediate clutch oil (check ball seated)

Servo and intermediate clutch oil

Drive range - third gear

When the direct clutch is applied, intermediate clutch oil pressure increases. This increased pressure, plus the accumulator spring, overcomes the servo oil pressure and the accumulator piston is moved until it reaches the stop on the pin (see Fig. T71). As the accumulator piston moves, it abuts the servo piston which moves a corresponding distance, until it contacts a retainer ring on the servo pin; it will not, however, move any further and the front band will not be applied.

As the accumulator piston moves, an amount of direct clutch oil is absorbed and this permits the direct clutch to apply at a controlled rate for a smooth 2-3 up-change.

Drive range - 3-2

The release of the direct clutch is controlled by the front servo, two orifices and two check balls. This

Printed in England

© Rolls-Royce Motors Limited 1980

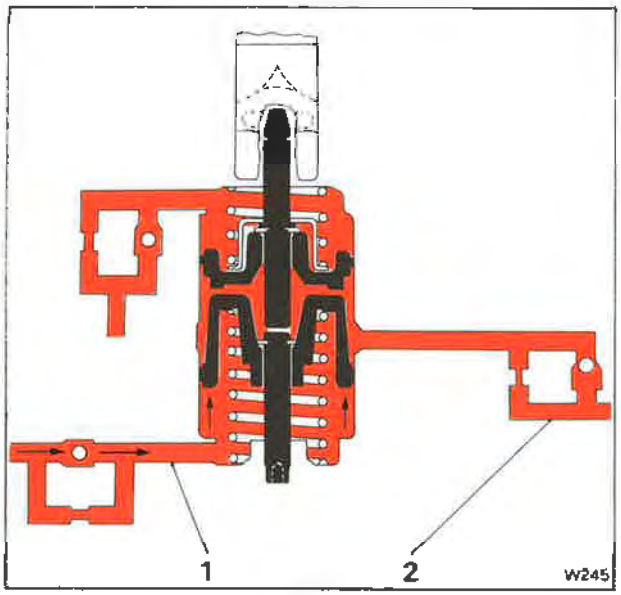

Fig. T71 Drive range - 3rd gear
1 Direct clutch oil
2 Intermediate clutch oil (check ball seated)

Direct clutch and intermediate clutch oil

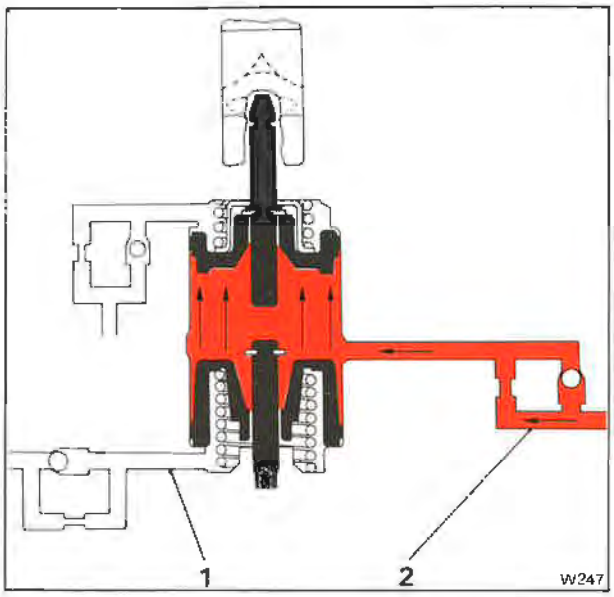

Fig. T73 Intermediate range - 2nd gear
1 Direct clutch passage
2 Intermediate clutch oil (check ball seated)

Intermediate clutch oil

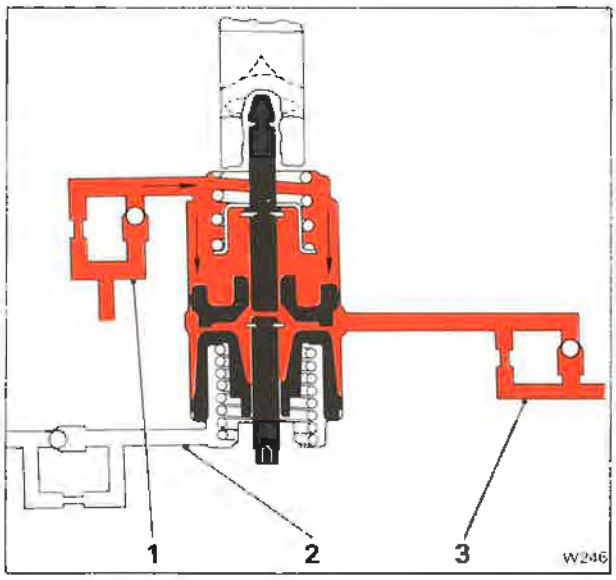

Fig. T72 Drive range - 3-2
1 Servo oil (check ball seated)
2 Direct clutch passage
3 Intermediate clutch oil (check ball seated)

Servo and intermediate clutch oil

allows the driving load to be transferred smoothly to the intermediate roller/sprag.

The controlled release pressure allows the engine to increase its r.p.m. to suit the lower gear ratio of second gear during detent down-changes, resulting in a smooth change with better acceleration.

During the stroking of the servo and accumulator pistons, servo oil seats a check ball and the oil must pass through a restrictor. This slows down the stroking of the pistons (see Fig. T72).

The exhausting oil from the accumulator and the direct clutch seats another check ball and the oil is forced to flow through an orifice. This controls the clutch pressure during direct clutch release.

Intermediate range - second gear

During a manual 3-2 down-change, intermediate clutch oil from the 1-2 shift valve seats a check ball and flows through an orifice to apply the front band (see Fig. T73). The oil which applies the band is also controlled by the stroking of the accumulator piston which is resisted by the accumulator spring and the restricted exhaust of direct clutch oil.

Detent solenoid, control valve spacer and front servo - To remove

These units may be removed from the transmission whether or not the transmission is fitted to the car.

1. Drain the transmission fluid and remove the sump.

2. Remove the control valve unit and governor pipes (see Section T12).

3. Disconnect the leads from the connector terminals.

4. Remove the two setscrews that secure the detent solenoid.

5. Remove the solenoid (and gasket if fitted).

6. Remove the control valve spacer plate and gasket.

Note

If the last operation is being carried out with the transmission in the car, lower the control valve spacer plate in a level plane so that the check balls do not fall out. Remove the check balls from the spacer plate.

7. Remove the six check balls from the cored passages in the transmission case (see Fig. T74).
8. Lift the front servo piston, retaining ring, pin, retainer and spring from the transmission case. An exploded view of the front servo is shown in Figure T76.

Front servo - To inspect

1. Examine the servo pin for damage.
2. Examine the oil seal ring groove in the piston for damage.
3. Ensure that the ring is free in the groove.
4. Examine the piston for cracks and other damage.
5. Check the fit of the servo pin in the piston.

Detent solenoid, control valve spacer and front servo - To fit

When overhauling the front servo or front accumulator piston it will be noticed that the teflon ring allows the piston to slide very freely in its bore. This is a normal characteristic of the ring and does not indicate leakage during operation.

When servicing pistons, the following points should be noted.

Only remove a teflon oil sealing ring from a piston ring groove if the ring is to be renewed.

Only renew a teflon oil sealing ring if it shows evidence of leaking during operation or visual damage.

When changing a front servo teflon oil sealing ring, renew with an aluminium sealing ring.

1. Fit two guide bolts into the transmission case.
2. Place the six check balls into the ball seat pockets in the case.
3. If the transmission is in the car, place the check balls into the ball seat pockets in the spacer plate.

Note

One check ball is non-functional, therefore, **on RC transmissions** omit one ball as shown in Figure T75.

4. Fit the control valve spacer plate to case gasket (gasket with extension for detent solenoid).
5. Fit the control valve spacer plate.
6. Fit the detent solenoid (and gasket if fitted). Do not tighten the setscrews at this time.
7. Fit the front servo spring and retainer into the bore of the transmission case.
8. Fit the retainer ring onto the front servo pin and install the pin into the case so that the tapered end contacts the forward band. Ensure that the retainer ring is installed in the servo pin groove.
9. Fit a new piston sealing ring to the servo piston, if the ring has been removed.
10. Fit the servo piston onto the band apply pin with the flat side of the piston positioned towards the transmission sump.

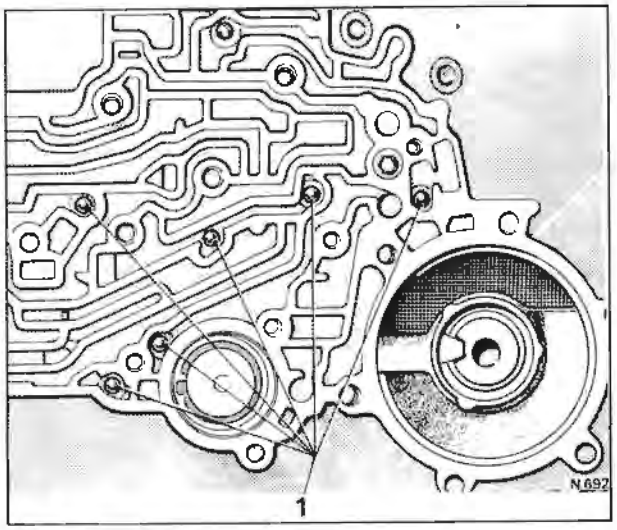

Fig. T74 Location of check balls - transmission case
1 Check balls

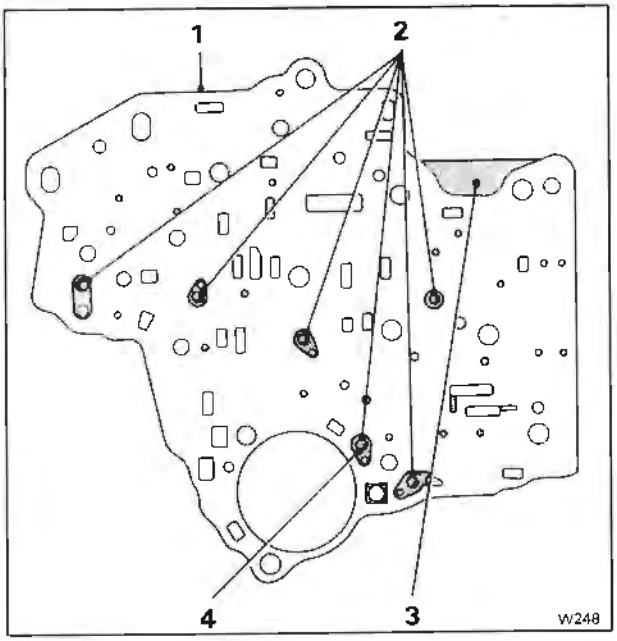

Fig. T75 Location of check balls - spacer plate
1 Spacer plate to case gasket
2 Check balls
3 Spacer plate
4 Non-functional ball (omit on RC transmissions)

If the transmission is in the car, the parts should be assembled as a group (see Fig. T76) and fitted into the servo bore. A length of straight clean feeler gauge [approximately 0,51 mm. (0.020 in.)] should be used to hold the servo assembly temporarily in position as shown in Figure T77. Withdraw the feeler gauge before tightening the control valve body set-screws.

Printed in England
© Rolls-Royce Motors Limited 1980

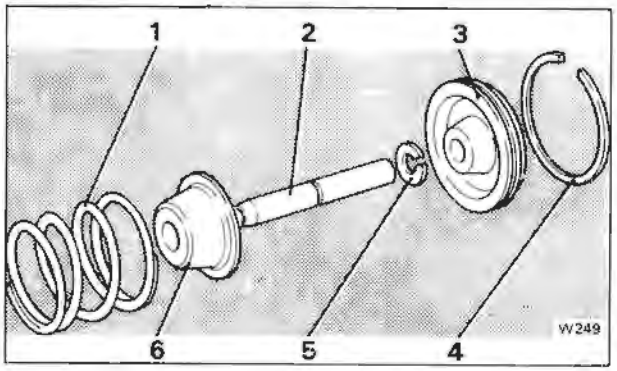

Fig. T76 Front servo - exploded
1 Spring
2 Pin
3 Piston
4 Oil seal ring
5 Retainer ring
6 Spring retainer

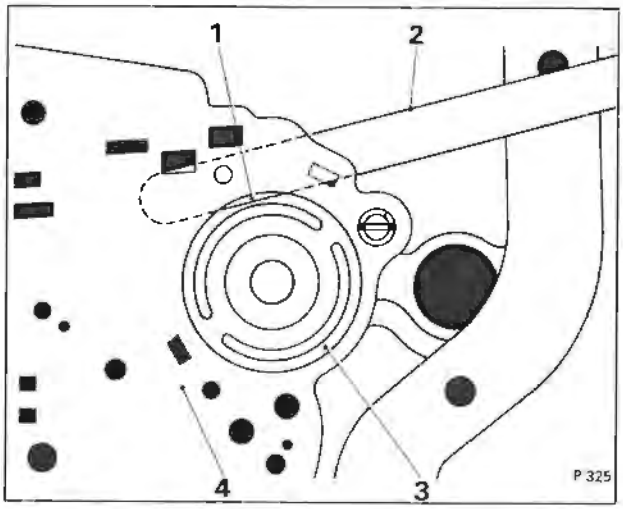

Fig. T77 Method of temporarily holding front servo piston in position (Transmission in car)
1 Correct position of feeler gauge, allowing the accumulator piston to enter the front servo bore before the feeler gauge is withdrawn
2 Feeler gauge
3 Front servo piston
4 Spacer plate

11. Connect the electrical leads from the top gear switch and detent solenoid onto the connector.
12. Fit the control valve as described in Section T12 then torque tighten the setscrews and the detent solenoid setscrews to the figures quoted in Chapter P.

Section T15

Rear extension

Rear extension - To remove

This Section describes the procedure for removal of the rear extension when the transmission is fitted to the car.

The procedure is the same when the transmission is removed from the car except that the gearchange actuator and the propeller shaft will have been removed.

1. Remove the gearchange electric actuator as described in Section T5.
2. Remove the propeller shaft as described in Chapter F.
3. Place a drip tray beneath the rear extension.
4. Remove the coupling flange by withdrawing it from the output shaft.
5. Remove the setscrews that secure the rear extension to the transmission casing.
6. Slide the rear extension rearward and downward until it clears the output shaft.

Caution

Make certain that the output shaft splines do not damage the oil seal in the end of the rear extension.

7. Remove and discard the gasket from the rear extension.

Rear extension - To inspect

1. Examine the rear extension for cracks or damage.
2. Examine the bush for excessive wear or damage.
3. Examine the oil seal for damage.
4. If a new oil seal is to be fitted, push out the old seal using a suitable drift.
5. Ensure that the seal bore in the rear extension is clean and free from damage and that the seal drain-back port is not obstructed.
6. Lightly smear the outer edge of the new seal with Wellseal. Drive in the seal using tool RH 7953 (J-21359).

Note

The webbing on the seal installation tool RH 7953 (J-21359) must be undercut by approximately 3,17 mm. (0.125 in) as shown in Figure T78.

7. Ensure that the rear face of the transmission casing and the front face of the extension are clean and free from burrs.

Rear extension - To fit

1. Fit a new gasket onto the extension housing.
2. Carefully fit the extension casing over the output shaft until the extension abuts the rear of the transmission casing.
3. Ensure that the splines on the output shaft do not touch the oil seal in the end of the extension casing otherwise the seal lip may be damaged.

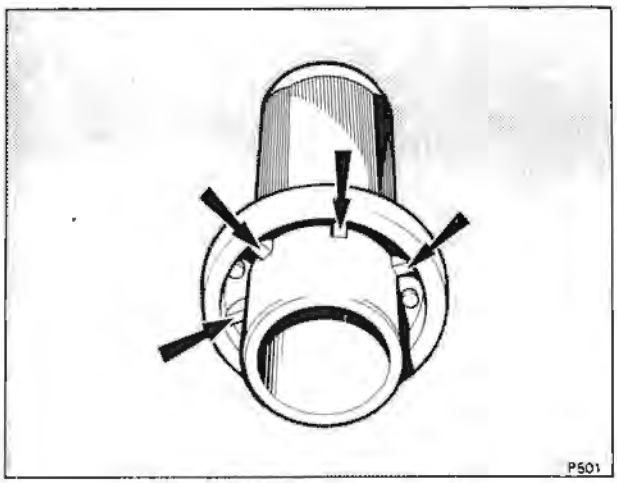

Fig. T78 Seal installation tool RH 7953 (J-21359)

4. Fit the setscrews and torque tighten them to the figures specified in Chapter P.
5. Fit the coupling flange.
6. Fit the propeller shaft.
7. Fit the electric actuator.

Printed in England
© Rolls-Royce Motors Limited 1980

Section T16

Oil pump

The oil pump is an internal/external gear type which is secured to the front face of the transmission casing. Contained within the oil pump cover is an oil pressure regulator valve train. The pump is mechanically connected to the engine flex plate and operates whenever the engine is running.

As the engine flex plate rotates it turns the torque converter pump which is keyed to the inner gear of the oil pump. The inner gear turns the outer gear which causes oil to be lifted from the transmission sump via an oil strainer.

As the gears turn, the oil is carried in pockets formed by the gear teeth, past a crescent shaped projection of the pump. Beyond the crescent, the gear teeth move closer together causing the oil to be forced out at pressure from between the teeth. At this point the oil is delivered through the pump outlet to the pressure system (see Fig. T79).

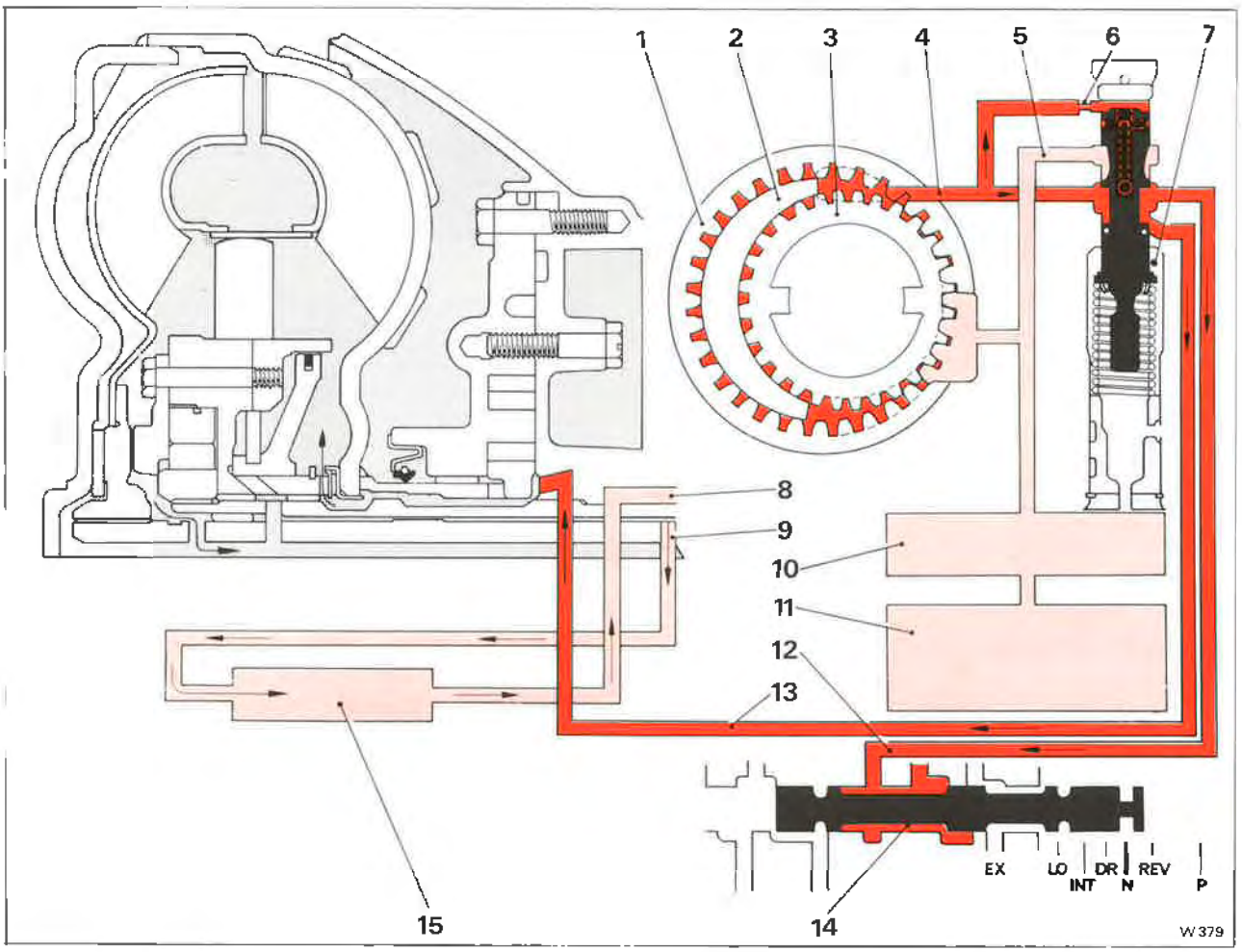

Fig. T79 Oil pump and pressure regulating system

1 Driven gear
2 Pump crescent
3 Driving gear
4 Pump outlet
5 Pump intake
6 Line pressure oil
7 Pressure regulator valve
8 Lubricating oil
9 Converter return
10 Strainer assembly
11 Transmission sump
12 Line pressure oil
13 Converter oil
14 Manual valve
15 Heat exchanger

Line oil

Intake and lubricating oil

Printed in England
© Rolls-Royce Motors Limited 1980
December 1980
TSD 4200

The oil pressure is controlled by a pressure regulator valve. As the pressure builds up, the oil is directed through an orifice to the top of the pressure regulator valve. When the correct pressure is reached, the valve moves against spring pressure, opening a passage which feeds the torque converter.

When the torque converter is full, oil passes to the transmission heat exchanger by way of an external pipe. Upon leaving the heat exchanger, the oil is fed by way of a second external pipe to the transmission lubricating system.

As the pressure continues to increase from the pump, the pressure regulator valve moves further to expose a port which directs excess oil back to the suction side of the pump. The pressure regulator valve is spring balanced to regulate line pressure at approximately 4,92 kgf/sq.cm. (70 lbf/sq.in.).

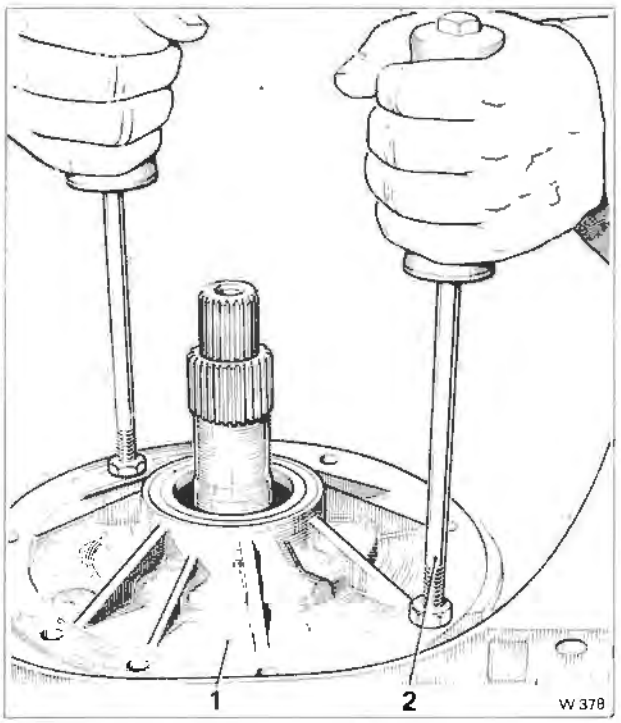

Fig. T80 Removing the oil pump
1 Oil pump
2 Slide hammer

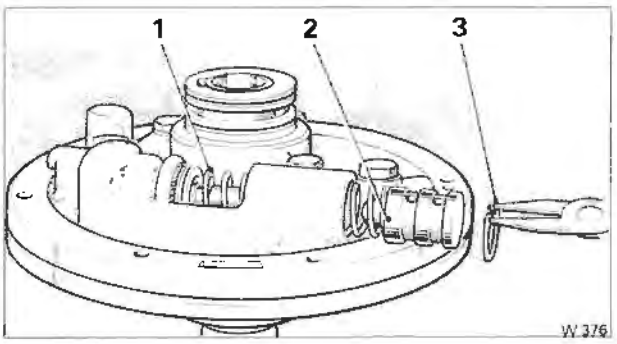

Fig. T81 Removing the regulator valve retaining circlip
1 Regulator valve spring
2 Boost valve sleeve
3 Circlip

Note
There are two types of regulator valves, therefore, reference should be made to Section T4.

Oil pump - To remove

1. Remove the transmission from the car (see Section T6).
2. Remove the retaining clamp RH 7952 (J-21366) and withdraw the converter.

Note
The converter and oil weigh approximately 22,68 kg. (50 lb.) and care should be taken when removing it to ensure it is not dropped or damaged.

3. Install the transmission in the holding fixture RH 7955 (J-8763) with the sump upwards.
4. Remove the pump attaching setscrews.
5. Fit the threaded slide hammers (J-7004) into the setscrew holes in the pump body.

Tighten the lock-nuts and remove the pump assembly from the transmission case (see Fig. T80).

Note
Operate the slide hammers simultaneously otherwise the pump will tilt and jam in the case.

6. Remove the slide hammers.
7. Remove and discard the pump to case sealing ring and gasket.

Oil pump - To dismantle

1. Holding the pump assembly firmly on a bench, push the regulator boost valve sleeve, against spring pressure, then remove the circlip (see Fig. T81).

Note
The pressure regulator spring is under pressure and care should be exercised when removing the boost valve and sleeve.

2. Remove the regulator boost valve and sleeve.
3. Remove the pressure regulator spring.
4. Remove the regulator valve, spring retainer and spacer or spacers (if fitted).
5. Remove the setscrews which secure the pump cover to the pump body. Separate the cover and body, noting that the setscrews are of differing lengths.
6. Mark the driving and driven gears to facilitate correct assembly (an indelible pen or pencil is recommended).
7. Remove the gears from the pump body as shown in Figure T82.
8. Remove the retaining pin and plug from the end of the regulator bore.
9. Remove the oil rings from the pump cover.
10. Remove the pump to forward clutch housing selective washer, noting the thickness to facilitate fitting of a new washer on assembly.

Oil pump - To inspect
Wash all parts in clean paraffin, then dry with compressed air.

1. Examine the pump body gear pocket and the crescent for scoring or other damage.
2. Fit the gears into the pump body, then check the end clearance as shown in Figure T83. The clearance should be between 0,02 mm. and 0,09 mm. (0.0008 in. and 0.0035 in.).
3. Examine the face of the pump body for scores and burrs.
4. Examine the oil passages for blockages and porosity.
5. Examine the threads into which the cover securing setscrews fit.
6. Check the pump cover and body faces for overall flatness.
7. Examine the pressure regulator valve bore for score marks.
8. Ensure that the pressure regulator valve and the boost valve will move freely in their respective bores.

Oil pump - To assemble

1. Fit the oil pump driving and driven gears into the pump body with the alignment marks (made with an indelible pen or pencil) uppermost.

Note

If the pump driven gear has a rectangular or triangular identification mark on one tooth, the gear should be installed with the identification mark downwards.

Fit the drive gear with the drive tangs uppermost (see Fig. T82).

2. Fit the pressure regulator spring retainer, spacer or spacers (if fitted) and spring into the pressure regulator bore (see Fig. T84).
3. Lightly lubricate the pressure regulator valve with clean transmission fluid, then fit the valve into the opposite end of the bore, stem end first.
4. Fit the pressure regulator valve end plug and retaining pin.
5. Lightly lubricate the boost valve and sleeve, then fit the valve into the sleeve (stem end out). Fit both parts into the bore in the pump cover by compressing the sleeve against the pressure regulator valve spring.
6. Retain the sleeve with the circlip.
7. Fit the two oil sealing rings to the pump cover.
8. Lubricate the pump gears with clean transmission fluid then fit the pump cover to the pump body.
9. Fit the cover securing setscrews into their original positions. Leave the setscrews finger tight.
10. Fit the pump body and cover alignment band (J-21368) around the pump assembly. Tighten the band to align the cover with the body (see Fig. T85).
11. With the band in position, tighten the pump body to cover securing setscrews to the figures quoted in Chapter P. Remove the alignment band.
12. Fit a new pump to case 'O' ring.
13. If necessary, fit a new front pump oil seal using the installing tool RH 7953 (J-21359).
14. Fit a new selective washer (pump to forward clutch housing), with a corresponding thickness to the one removed.

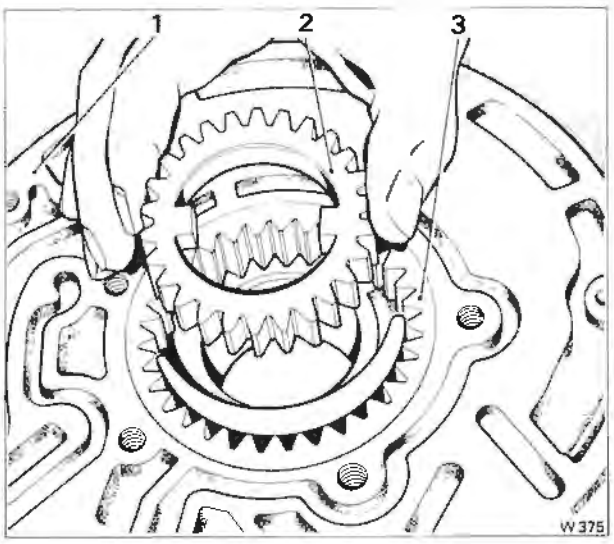

Fig. T82 Removing the pump gears
1 Pump body
2 Driving gear (tangs uppermost)
3 Driven gear

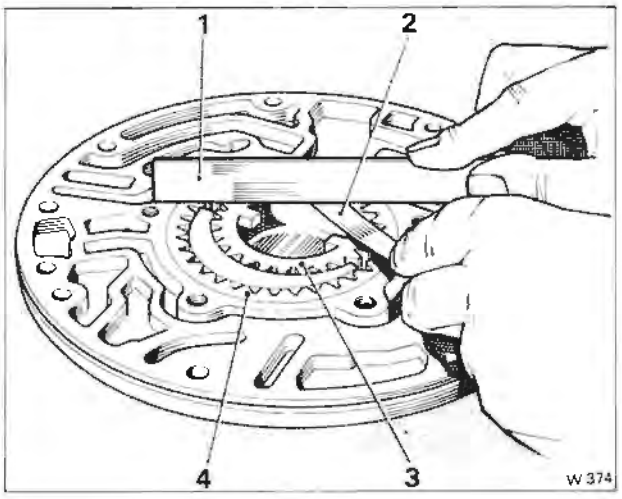

Fig. T83 Checking the gear end clearance
1 Straight edge
2 Feeler gauge
3 Inner (driving) gear
4 Outer (driven) gear

Oil pump - To fit

1. Fit a new gasket and guide pins into the transmission case.
2. Lubricate the turbine shaft journals with clean transmission fluid. Smear the seal rings on the pump delivery sleeve with petroleum jelly, ensuring that the rings are correctly located.
3. Fit the pump assembly (see Fig. T86). Ensure that new seals are fitted to the setscrews.

Do not remove the guide pins until all but two

Printed in England
© Rolls-Royce Motors Limited 1980

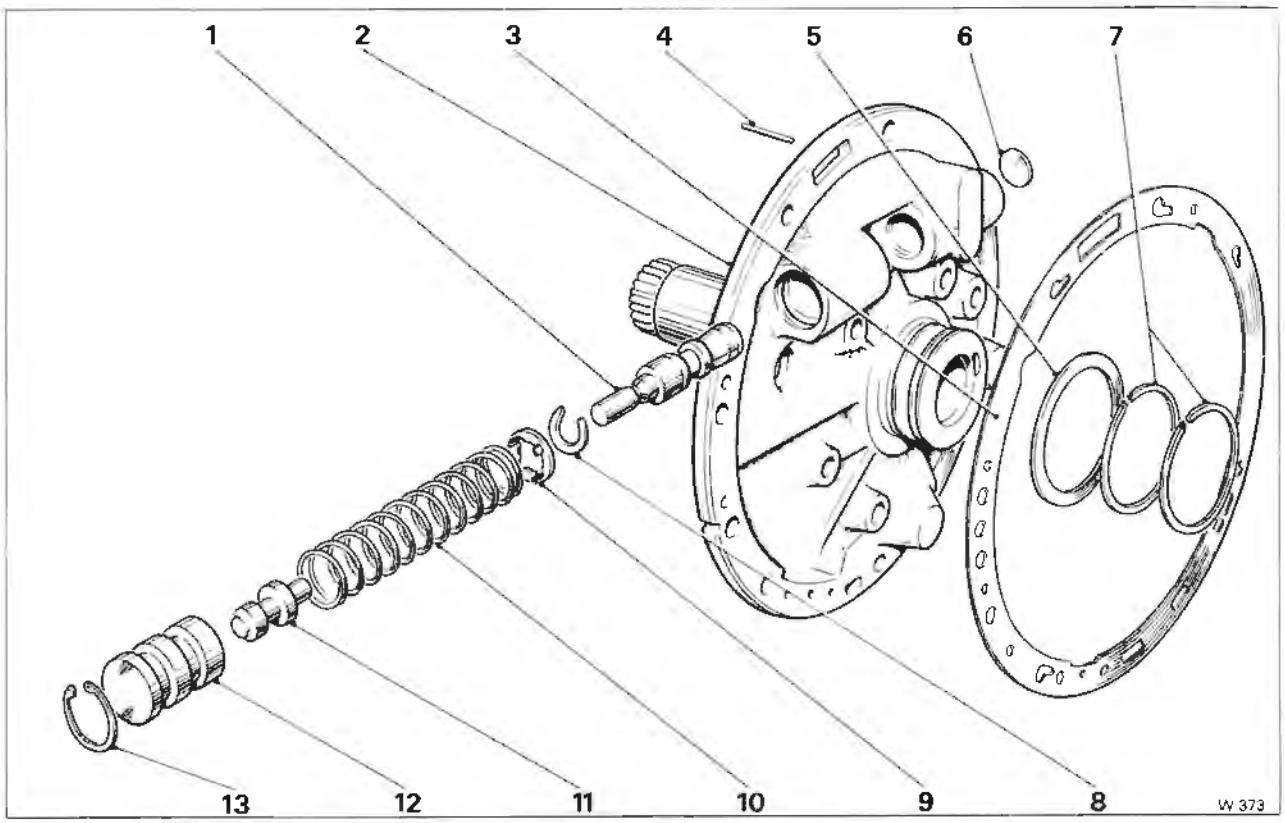

Fig. T84 Pump cover - exploded

1 Pressure regulator valve
2 Pump cover
3 Gasket
4 Retaining pin
5 Selective washer
6 Bore plug
7 Oil sealing rings
8 Spacer
9 Spring retainer
10 Pressure regulator spring
11 Boost valve
12 Sleeve
13 Circlip

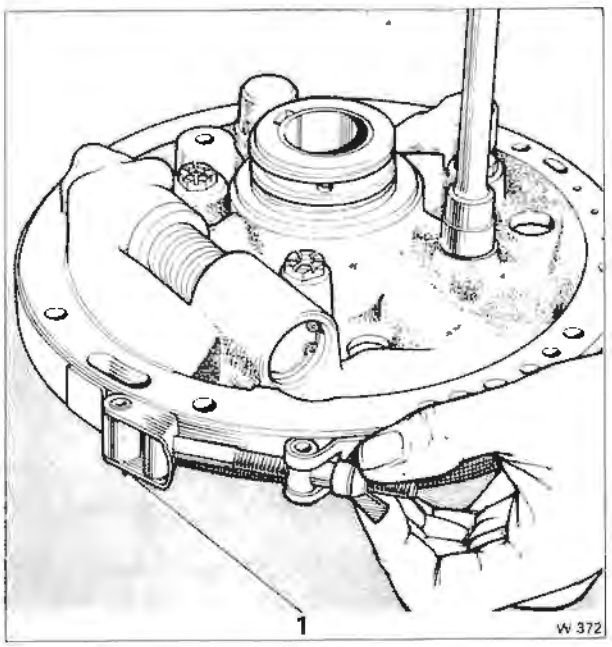

Fig. T85 Aligning the pump cover with the pump body

1 Alignment band

setscrews have been fitted. Leave one setscrew out to assist in checking the end-float.

4. Torque tighten the setscrews to the figures quoted in Chapter P.

Note

If the turbine shaft cannot be rotated as the pump is being pulled into position, it is possible that either the forward or direct clutch housings have not been correctly indexed with all the clutch plates. This condition must be corrected before the pump is finally pulled into position.

5. Check the front unit end-float as follows (see Fig. T87).

(a) Fit a slide hammer (J-7004) into the one remaining bolt hole.
(b) Secure a dial test indicator on the slide hammer bolt. Adjust the indicator to register against the end of the turbine shaft.
(c) Hold the output shaft forward whilst pushing the turbine shaft rearward to its stop.
(d) Set the dial indicator to zero.
(e) Pull the turbine shaft forward, noting the indicator reading (shaft travel).

The end-float should be between 0,08 mm. and 0,61 mm. (0.003 in. and 0.024 in.).

If the end-float is not within the limits, select a new washer, referring to the following chart.

Thickness	Colour	Number
1,52 mm. to 1,63 mm. (0.060 in. to 0.064 in.)	Yellow	0
1,80 mm. to 1,90 mm. (0.071 in. to 0.075 in.)	Blue	1
2,08 mm. to 2,18 mm. (0.082 in. to 0.086 in.)	Red	2
2,36 mm. to 2,46 mm. (0.093 in. to 0.097 in.)	Brown	3
2,64 mm. to 2,74 mm. (0.104 in. to 0.108 in.)	Green	4
2,92 mm. to 3,02 mm. (0.115 in. to 0.119 in.)	Black	5
3,20 mm. to 3,30 mm. (0.126 in. to 0.130 in.)	Purple	6

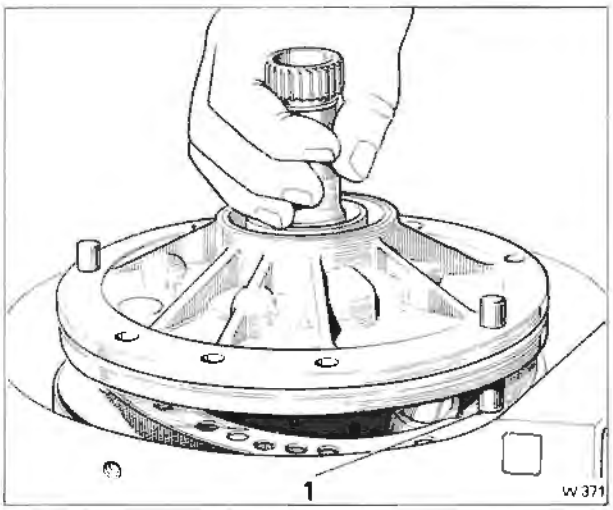

Fig. T86 Fitting the oil pump
1 Guide pin

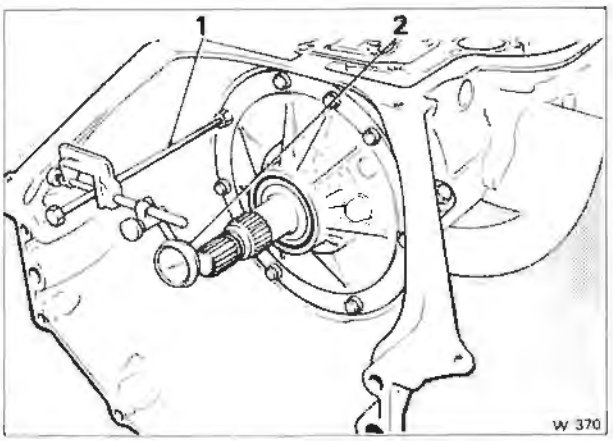

Fig. T87 Checking the front unit end-float
1 Slide hammer bolt
2 Dial indicator

Note
An oil soaked washer may tend to discolour. Therefore, if necessary, measure the washer to ascertain the thickness.

6. Remove the dial test indicator and slide hammer.

7. Fit the final pump securing setscrew and seal. Torque tighten the setscrew to the figures quoted in Chapter P.

Printed in England
© Rolls-Royce Motors Limited 1980

Section T17

Control rods, levers and parking linkage

The control rods, levers and parking linkage consist of an assembly of levers and rods which are operated by the electric gearchange actuator. The detent lever is connected to the manual control valve in the control valve unit and is retained in this position by a spring-loaded detent roller (see Fig. T88).

The parking pawl actuating rod causes the parking pawl to engage the transmission whenever Park is selected. This provides a mechanical lock which will hold the car on the steepest of gradients.

When the gear range selector lever on the steering column is moved, with the ignition on, the electric actuator will move the gearchange operating lever to the required position via an adjustable rod. The gearchange operating lever is secured to the outer end of the manual shaft and the detent lever is secured to the inner end of the shaft. Therefore, the detent lever will move a corresponding distance, moving the manual control valve.

When the gear selector lever on the steering column is moved to Park, the parking pawl actuating rod which is secured to the detent lever causes the parking pawl to engage with a gear ring on the rear unit planet carrier. The rear unit planet carrier is mechanically connected to the transmission output shaft, therefore, the shaft is prevented from rotating.

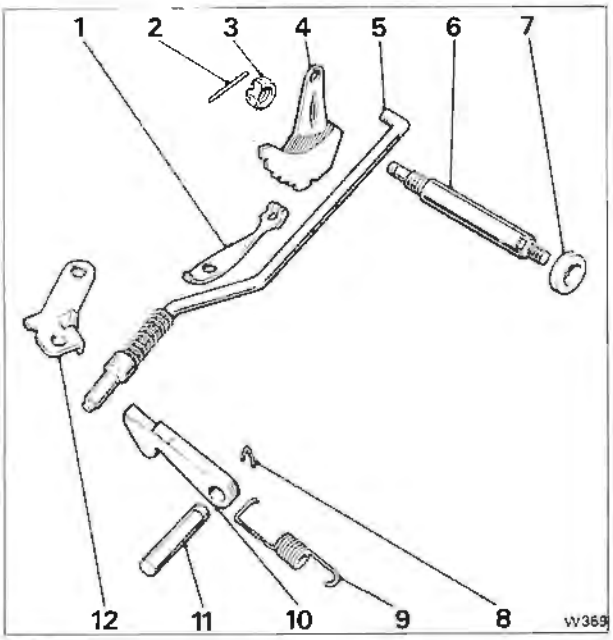

Fig. T88 Manual shaft and parking linkage - exploded

1 Detent roller and spring assembly
2 Retaining pin
3 Lock-nut
4 Detent lever
5 Parking pawl actuating rod
6 Manual shaft
7 Lip seal
8 Spring retainer
9 Pawl return spring
10 Parking pawl
11 Pawl shaft
12 Parking lock bracket

Control rods, levers and parking linkage - To remove

1. The units may be removed from the transmission whether or not the transmission has been removed from the car.

2. If the transmission has not been removed, drain and remove the sump as described in Section T11.

3. If the gearchange electric actuator has not been removed, disconnect the gearchange operating rod by removing the split pin and clevis pin.

4. Remove the split pin and clevis pin from the opposite end of the gearchange operating rod; remove the rod.

5. Remove the lock-nut which retains the gearchange operating lever to the manual shaft; remove the lever.

6. Remove the setscrew that secures the detent spring and roller assembly to the control valve unit; remove the detent spring assembly.

7. Remove the pin which secures the manual shaft to the case.

8. Slacken the lock-nut securing the detent lever to the manual shaft.

9. Remove the detent lever from the manual shaft. Then remove the lock-nut completely.

10. Remove the parking pawl actuating rod, detent lever and manual shaft from the case.

Note
Do not remove the manual shaft seal unless replacement is required.

11. Remove the setscrews securing the parking lock bracket; remove the bracket.

12. Remove the parking pawl return spring.

Note
The following operations are to be completed only if one or more of the parts involved requires replacement.

13. Remove the spring retainer from the parking pawl shaft. Remove the parking pawl shaft cup plug by placing a screwdriver between the parking pawl shaft and the casing; levering outwards (see Fig: T89).

Printed in England
© Rolls-Royce Motors Limited 1980
December 1980
TSD 4200

14. Remove the parking pawl and the shaft.

Control rods, levers and parking linkage - To inspect
1. Wash all parts in clean paraffin, then dry them with compressed air.

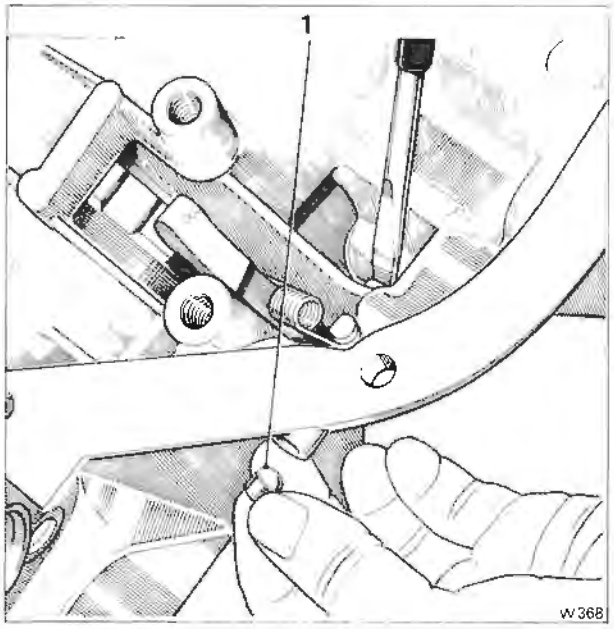

Fig. T89 Removing the cup plug
1 Cup plug

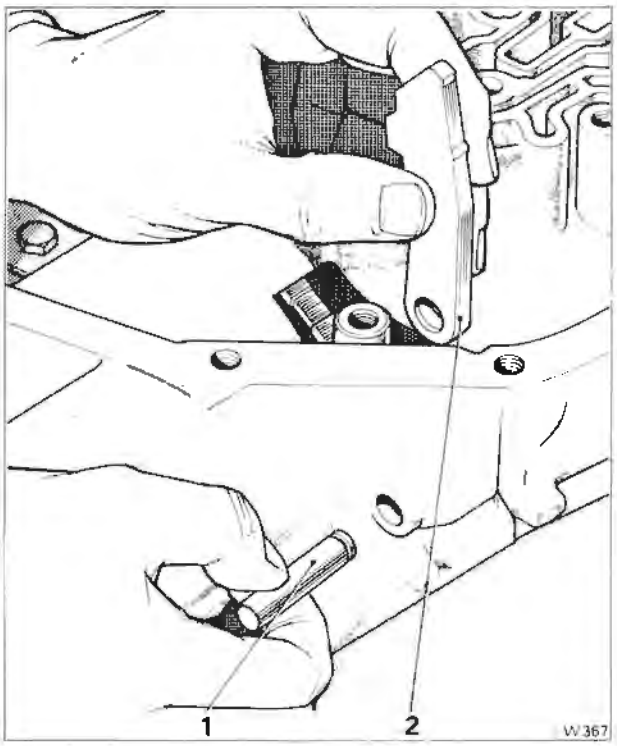

Fig. T90 Fitting the parking pawl and shaft
1 Shaft
2 Parking pawl

2. Examine the parking pawl actuator rod for cracks or broken spring retainer lugs.
3. Examine the actuator spring for distortion or damage. Ensure the actuator fits freely on the actuator rod.
4. Examine the parking pawl for cracks or wear.
5. Examine the manual shaft for damaged threads or shaft roughness (oil seal surface).
6. Examine the detent lever for cracks or a loose pin.
7. Examine the parking pawl shaft for damage to the retainer groove.
8. Examine the parking pawl return spring for distortion or damaged ends.
9. Examine the parking lock bracket for cracks or wear.
10. Examine the detent spring and roller assembly for cracks or damage.
11. Examine the gearchange operating rod for signs of bending.
12. Examine the jaws of the operating rod for cracks or damage.

Control rods, levers and parking linkage - To fit
1. Fit the parking pawl with the tooth towards the centre of the transmission, then fit the parking pawl shaft (see Fig. T90).
2. Fit the parking pawl shaft retaining clip.
3. Fit the cup plug into the case, using a 9,52 mm. (0.375 in.) diameter steel rod, to drive the shaft and plug into the case until the shaft bottoms on the case rib.
4. Fit the parking pawl return spring with the squared end hooked around the pawl.
5. Fit the parking lock bracket with the guides over the parking pawl. Torque tighten the setscrews to the figures quoted in Chapter P.
6. Fit the actuator rod plunger under the parking lock bracket and over the parking pawl.
7. Fit the opposite end of the actuator rod into the detent lever from the side opposite to the pin.
8. If necessary, fit a new manual shaft to case lip type seal into the case, using a 19,05 mm. (0.750 in.) diameter steel rod to seat the seal.
9. Lubricate the manual shaft with Shell Retinax A grease. Fit the shaft into the case and through the detent lever (see Fig. T91).
10. Fit the lock-nut onto the manual shaft, then torque tighten the nut to the figures quoted in Chapter P.
11. Fit the retaining pin into the transmission casing, aligning it with the groove in the manual shaft (see Fig. T92).
12. Fit the detent spring and roller assembly. Torque tighten the setscrew to the figures quoted in Chapter P.
13. Fit the gearchange operating lever to the manual shaft. Fit the lock-nut and torque tighten to the figures quoted in Chapter P.
14. Fit the gearchange operating rod using the clevis pins. Lubricate the clevis pins with Rocol

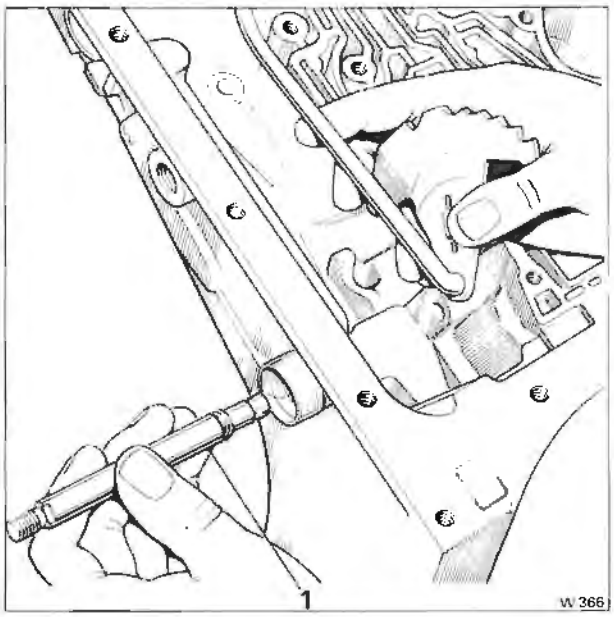

Fig. T91 Fitting the manual shaft
1 Manual shaft

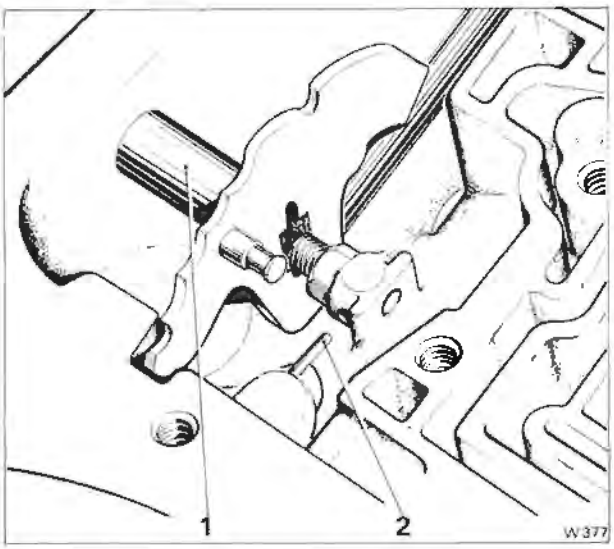

Fig. T92 Fitting the manual shaft retaining pin
1 Manual shaft
2 Retaining pin

MTS 1000 grease, then fit new split pins.
15. Fit the sump (see Section T11).

Control linkage - To check
1. Remove the split pin and clevis pin from the gearchange operating rod, at the actuator end.
2. Select Park on the gearchange actuator. Push the lower end of the gearchange operating lever fully forward (Park position).
3. Ensure that both jaws of the operating rod slide easily about the two levers and check the clevis pin will slide into the jaw and through the lever.
4. Select each of the gear positions in turn on the actuator. At each position, ensure that the clevis pin will slide easily into the jaw and lever.
5. Check that the pin will slide easily into the jaw when Low is selected after Park and conversely when Park is selected after Low.
6. If, in any position the pin will not pass through the jaw and lever, adjust the length of the rod.
7. Finally, lubricate the clevis pin with Rocol MTS 1000 grease. Fit the clevis pin and secure it with a new split pin.

Printed in England
© Rolls-Royce Motors Limited 1980

Section T18

Turbine shaft, forward and direct clutches, sun gear shaft and front band

The turbine shaft is a splined shaft which connects the torque converter to the forward clutch.

The forward clutch comprises a housing, splined onto the turbine shaft. Steel clutch driving plates which are driven by the clutch housing. Composition faced plates which are splined onto a clutch hub and a hydraulically operated clutch piston. The mainshaft is splined into the forward clutch hub.

The direct clutch is similar in construction to the forward clutch (see Fig. T93).

The composition plates are splined to a hub which is integral with the forward clutch back plate. The steel plates are splined to a housing which in turn is splined to the sun gear shaft. The clutch is applied hydraulically by a piston housed in the direct clutch housing.

The front band is a lined steel band which is anchored to the transmission case at one end and is servo operated at the other end. The band fits around the direct clutch housing and when moved by the servo, holds the housing stationary.

Whenever the forward clutch is applied, the drive transmitted by the turbine is connected to the transmission mainshaft. When the forward clutch is released the clutch return springs push back the hydraulic piston, the plates are then released and the connection between the converter and the mainshaft is broken. As a result, the transmission is in Neutral.

Whenever the direct clutch is applied, drive from the forward clutch is divided and follows two different paths to the gear unit (see Section T19).

By following one path, the drive continues through the forward clutch to the mainshaft and the rear gear unit internal (annulus) gear. The other path is via the forward clutch back plate, through the direct clutch to the sun gear shaft.

As the direct clutch is applied, clockwise torque from the converter causes an intermediate inner roller/sprag race to overrun the roller/sprag clutch assembly.

An illustrated summary of the power flow through the transmission is given in Section T19.

Turbine shaft, forward and direct clutches, sun gear shaft and front band - To remove

1. Remove the transmission from the car; withdraw the converter assembly.
2. Remove the oil pump.
3. Withdraw the turbine shaft and the forward clutch from the transmission (see Fig. T94).
4. Remove the thrust washer from between the

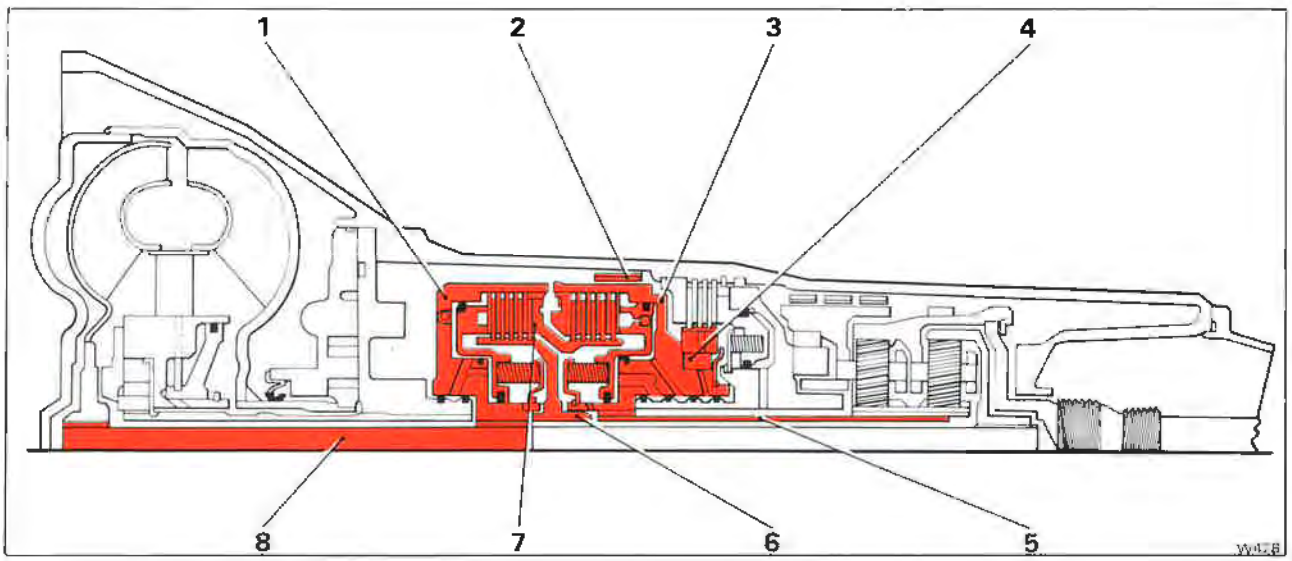

Fig. T93 Sectioned view of transmission showing forward and direct clutches

1 Forward clutch housing
2 Front band
3 Direct clutch housing
4 Intermediate roller/sprag clutch
5 Sun gear shaft
6 Forward clutch hub
7 Direct clutch hub
8 Turbine shaft

Turbine shaft, forward and direct clutches, sun gear shaft and front band.

Printed in England

© Rolls-Royce Motors Limited 1981

forward clutch hub and the direct clutch housing; the washer may have come out with the forward clutch.

5. Withdraw the direct clutch and intermediate roller/sprag assembly (see Fig. T95). The sun gear shaft may come out with the direct clutch assembly.

6. Remove the sun gear shaft if not previously removed.

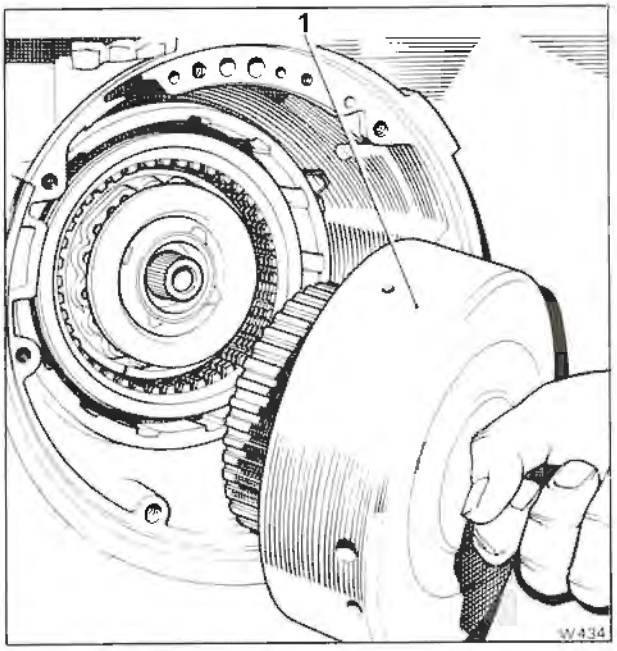

Fig. T94 Removing the forward clutch assembly
1 Forward clutch assembly

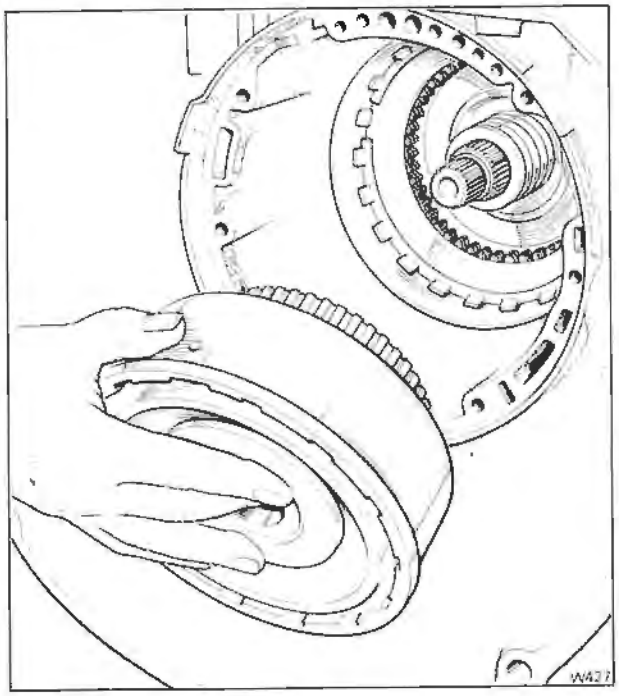

Fig. T95 Removing the direct clutch and intermediate roller/sprag assembly

7. Remove the front band.

8. Check the end-float of the rear unit; proceed as follows.

Rear unit end-float - To check

1. Remove the transmission rear extension housing.

2. Fit a slide hammer bolt (J-7004), or a similar suitable bolt into one of the holes in the end of the transmission case.

3. Mount a dial test indicator onto the bolt so that the indicator stem registers with the end of the out -put shaft (see Fig. T96).

4. Set the dial indicator to zero.

5. Move the output shaft in and out, noting the indicator reading to enable the correct end-float adjusting washer to be used when the transmission is assembled. The end-float should be between 0,18 mm. and 0,48 mm. (0.007 in. and 0.019 in.).

6. The adjusting washer which controls this end-float is a steel washer with three tabs located between the thrust washer and the rear face of the transmission case.

7. If a different washer thickness is required to bring the end-float within the specified limits, it can be selected with the aid of the following chart.

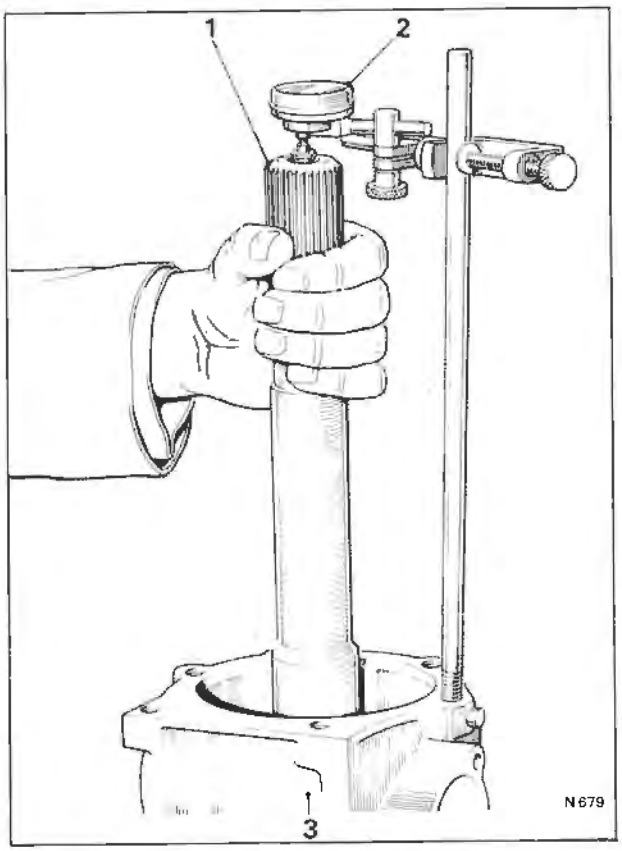

Fig. T96 Checking the rear unit end-float
1 Output shaft
2 Dial indicator gauge
3 Transmission case

Thickness	Number
0 mm. to 0,41 mm. (0 in. to 0.016 in.)	6
0,41 mm. to 0,81 mm. (0.016 in. to 0.032 in.)	5
0,81 mm. to 1,22 mm. (0.032 in. to 0.048 in.)	4
1,22 mm. to 1,63 mm. (0.048 in. to 0.064 in.)	3
1,63 mm. to 2,03 mm. (0.064 in. to 0.080 in.)	2
2,03 mm. to 2,44 mm. (0.080 in. to 0.096 in.)	1

Forward clutch and turbine shaft - To dismantle

1. Remove the large snap ring which retains the direct clutch hub to the forward clutch housing. Remove the direct clutch hub.

2. Remove the forward clutch hub. Remove the thrust washers, one from each side of the hub (see Fig. T97).

3. Remove the composition and steel clutch plates. Remove the clutch apply ring.

4. Place the forward clutch on the bed of a press with the turbine shaft lowermost.

5. Compress the clutch return springs until the retaining snap ring is accessible. Remove the snap ring (see Fig. T98).

6. Remove the tool, then remove the spring retainer and the sixteen clutch release springs. Keep these springs separate from the direct clutch release springs.

7. Remove the piston from the clutch housing (see Fig. T99).

Note

The forward and direct clutch pistons are similar. Ensure that the forward clutch piston is identified during dismantling, so that it can be reassembled correctly into the forward clutch housing.

8. Remove and discard the inner and outer seals from the clutch piston.

9. Remove and discard the piston centre seal from the forward clutch housing.

10. It is not necessary to remove the turbine shaft from the forward clutch housing unless either the shaft or the housing is damaged and requires renewal. Therefore, if renewal is required proceed as follows.

11. Place the forward clutch housing on the bed of a press with the turbine shaft lowermost.

12. Using a 9,53 mm. (0.375 in.) drive extension, approximately 76,20 mm. (3.00 in.) long, or similar

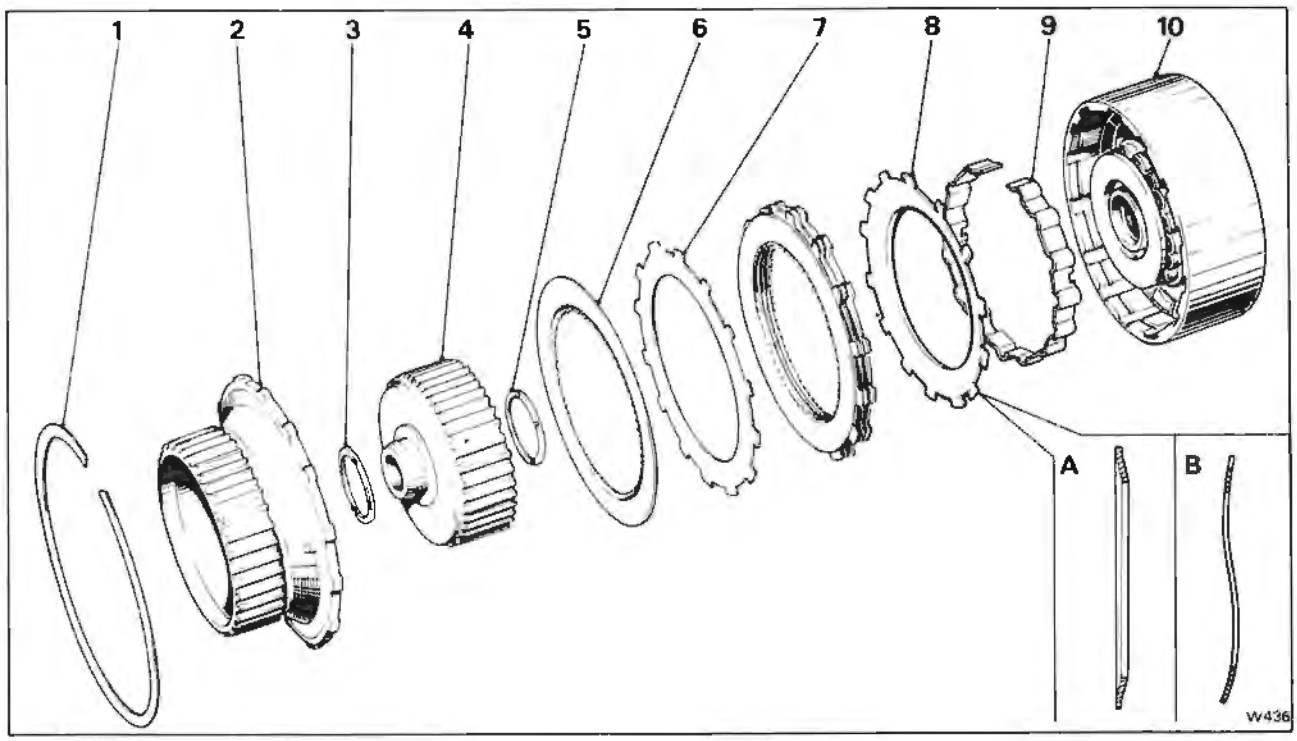

Fig. T97 Forward clutch assembly - exploded

1 Snap ring
2 Direct clutch hub
3 Thrust washer
4 Forward clutch hub
5 Thrust washer
6 Composition plate
7 Flat steel plate
8 Waved/Dished steel plate
9 Apply ring
10 Forward clutch assembly

A Dished steel clutch plate - Fitted to cars produced from 1980
B Waved steel clutch plate - Fitted to cars produced prior to 1980

Printed in England
© Rolls-Royce Motors Limited 1982
September 1982
TSD 4200

tool as a drive, press the turbine shaft out of the forward clutch housing.

Forward clutch and turbine shaft - To inspect

1. Wash all parts in clean paraffin, **except** the composition faced clutch plates. Dry all the parts with compressed air. The composition clutch plate surfaces should be examined for:

(a) Pitting and flaking.
(b) Wear.
(c) Glazing.
(d) Cracking.
(e) Charring.
(f) Metal particles embedded in the lining.

If a composition plate exhibits any of the above conditions, fit new plates.

2. The steel plates should be checked for heat discolouration. If the surface is smooth and an even colour is indicated, the plates can be used again. If severe heat spot discolouration or surface scuffing is indicated, fit new plates.

3. Examine the sixteen clutch release springs for collapsed coils or signs of distortion. If any springs show these symptoms, fit sixteen new springs.

Extreme heat or burning in the area of the clutch may have caused the springs to take a heat set, if this condition is found, fit sixteen new springs.

4. Examine the clutch hubs for worn splines. Ensure that the lubrication holes are clear and that the thrust faces are not scored or damaged.

5. Examine the piston for cracks.

6. Examine the clutch housing for wear, scoring and open oil passages.

7. Ensure that the check ball in the clutch housing is free in its chamber.

8. Ensure that the lubrication holes in the turbine shaft are clear.

9. Examine the splines on the turbine shaft for damage and the shaft for cracks or distortion.

10. Examine the bush journals for damage.

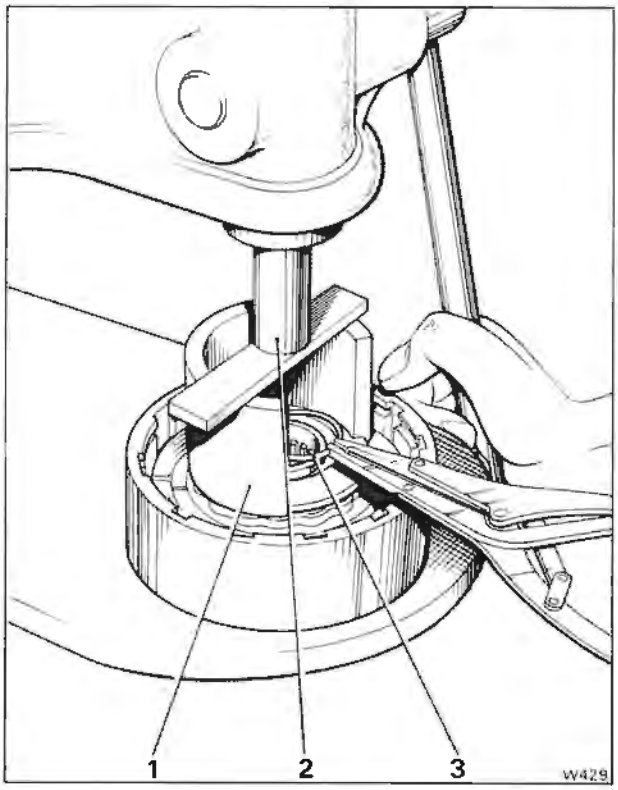

Fig. T98 Removing and fitting the forward clutch housing snap ring
1 Clutch spring compressor
2 Press ram
3 Snap ring

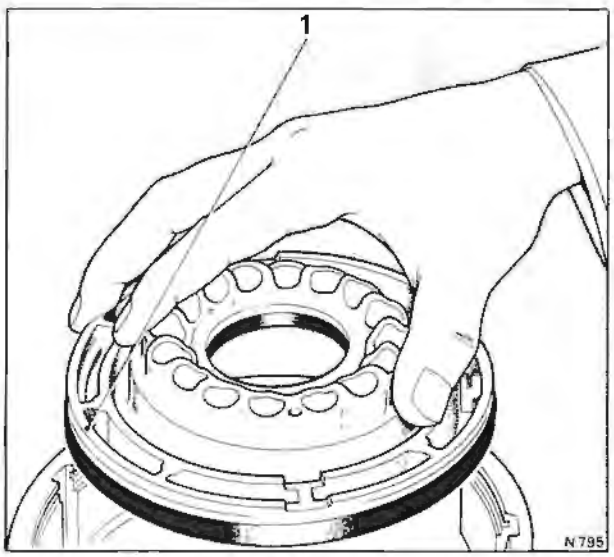

Fig. T99 Removing the forward clutch piston
1 Clutch piston

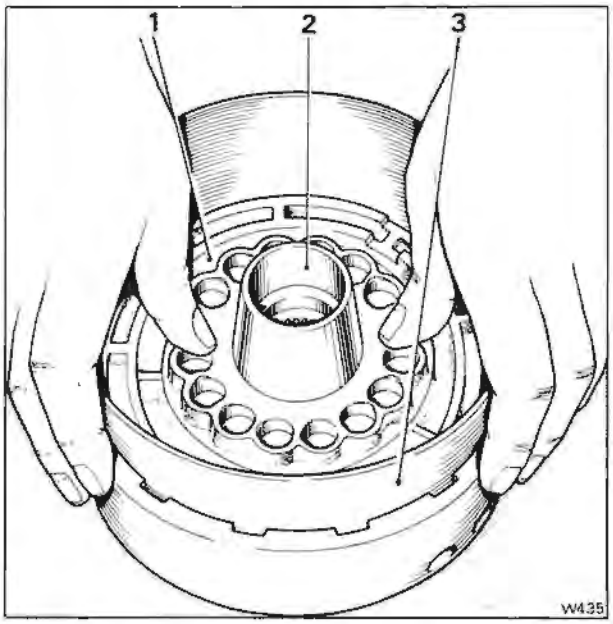

Fig. T100 Fitting the forward clutch piston
1 Forward clutch piston
2 Inner seal protector
3 Outer seal protector

Forward clutch and turbine shaft - To assemble
If the turbine shaft was removed from the forward clutch housing, proceed as follows.
1. Place the clutch housing on the bed of a press with the front face (flat side) uppermost.
2. Lightly lubricate the shorter splined end of the turbine shaft then, align the splines with the mating splines in the forward clutch housing. Using the press, carefully press the turbine shaft into the forward clutch housing until the shaft bottoms on the hub of the housing.
Note
The shaft should be started in the housing, then the pressure on the press arbor relaxed to allow the shaft to straighten itself. Repeat this step several times until it is evident that the shaft is squarely aligned with the housing. If the shaft is not started squarely, damage to the shaft or housing splines may occur.
3. Invert the forward clutch housing on the press so that the turbine shaft is downward.
4. Lubricate the new inner and outer clutch piston seals with clean transmission fluid. Lubricate the seal grooves in the piston with petroleum jelly then fit the seals with the seal lip facing away from the return spring pockets.
5. Lubricate a new piston centre seal with clean transmission fluid. Lubricate the seal groove in the forward clutch housing with petroleum jelly then fit the seal with the lip uppermost.
6. Fit the forward and direct clutch inner seal protector (J-21362) over the forward clutch hub.
7. Fit the clutch piston inside the forward and direct clutch piston seal protector (J-21409), then fit the assembly into the forward clutch housing (see Fig. T100).
8. Fit the clutch piston by rotating it clockwise until it is seated in the housing.
9. Fit the sixteen clutch release springs into the spring pockets in the clutch piston.
10. Place the clutch housing on the bed of a press with the turbine shaft lowermost.
11. Position the spring retainer on the springs.
12. Compress the springs ensuring that the retainer does not catch in the snap ring groove. Fit the snap ring then release the tension on the springs.
Note
Ensure that the release springs are not leaning. If necessary, push the springs into an upright position using a small screwdriver.
13. Fit the forward clutch apply ring into the clutch housing.
14. Fit the thrust washers on either side of the forward clutch hub. Retain the washers in position with petroleum jelly. Ensure the bronze washer is fitted to the side of the hub which faces the forward clutch housing.
15. Fit the forward clutch hub into the forward clutch housing.
16. Lubricate the five flat steel clutch plates, the five composition faced plates and the one dished steel clutch plate with clean transmission fluid.

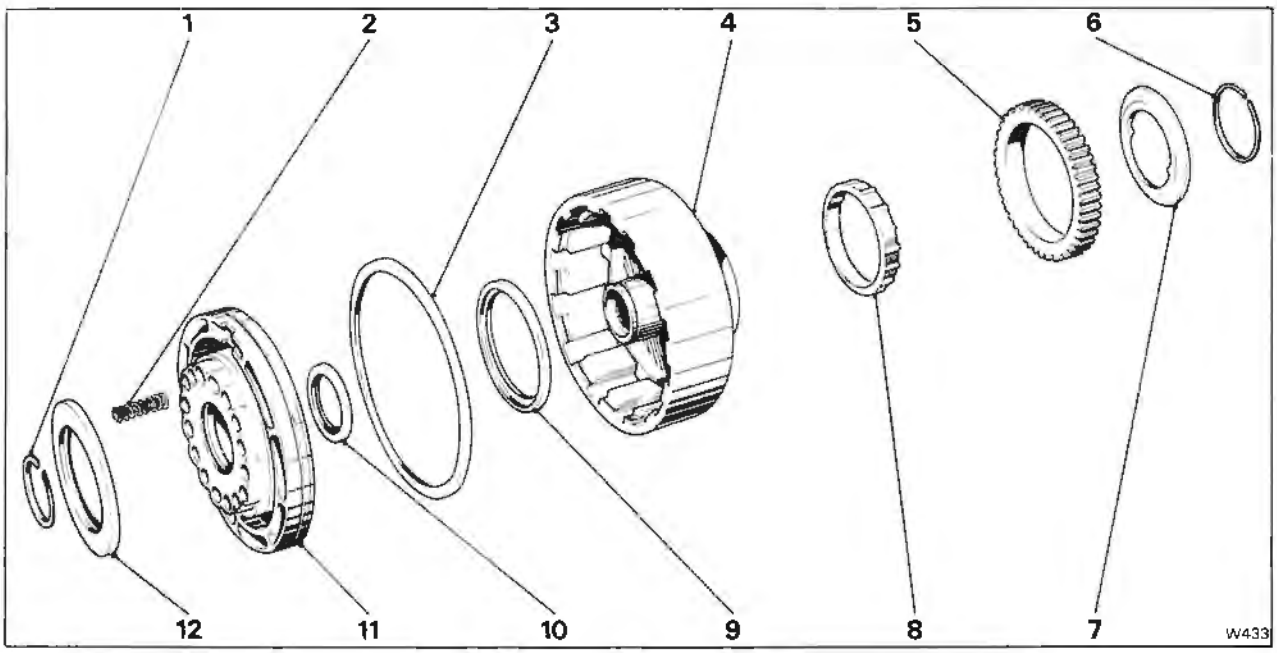

Fig. T101 Direct clutch and intermediate roller/sprag assembly - exploded
1 Snap ring
2 Clutch release spring (14)
3 Piston outer seal
4 Direct clutch housing
5 Intermediate clutch outer race
6 Snap ring
7 Roller/Sprag clutch retainer
8 Roller/Sprag assembly
9 Piston centre seal
10 Piston inner seal
11 Direct clutch piston
12 Clutch spring retainer

Printed in England
© Rolls-Royce Motors Limited 1982
September 1982
TSD 4200

Note
Cars produced from 1980 have a modification to the forward clutch. The **waved** steel clutch plate is superseded by a **dished** steel plate (see Fig. T97). Therefore, if a replacement is required, note the type of plate removed and the number of flat and composition plates to ensure the correct type is refitted.

17. Fit the clutch plates into the forward clutch housing as follows,

Waved steel plate; commence with the waved steel plate and then alternate composition (5) and flat steel plates (4), finishing with a composition plate.

Dished steel plate; commence with the dished steel plate with the concave side uppermost (away from the clutch piston), then alternate flat steel (5) and composition plates (5), finishing with a composition plate.

18. Fit the direct clutch hub into the forward clutch housing; fit the snap ring.

Direct clutch and intermediate roller/sprag clutch assembly - To dismantle

1. Remove the snap ring which retains the roller/sprag retainer.
2. Remove the retainer (see Fig. T101).
3. Remove the roller/sprag outer race, then withdraw the roller/sprag clutch assembly from the outer race.
4. Turn the unit over then remove the large snap ring which retains the direct clutch back plate in the clutch housing; remove the back plate.
5. Remove the five composition plates, four steel plates and one waved steel plate from the clutch housing. Remove the clutch apply ring.
6. Using the clutch spring compressor (J-2590), compress the clutch release springs and remove the snap ring (see Fig. T102).
7. Remove the tool and lift off the spring retainer. Remove the fourteen clutch release springs. Keep these springs separate from the forward clutch release springs.
8. Withdraw the direct clutch piston from the clutch housing.

Note
The forward and direct clutch pistons are similar. Ensure that the direct clutch piston is identified during dismantling so that it can be reassembled correctly into the direct clutch housing.

9. Remove and discard the piston inner and outer seals.
10. Remove and discard the piston centre seal from the direct clutch housing.

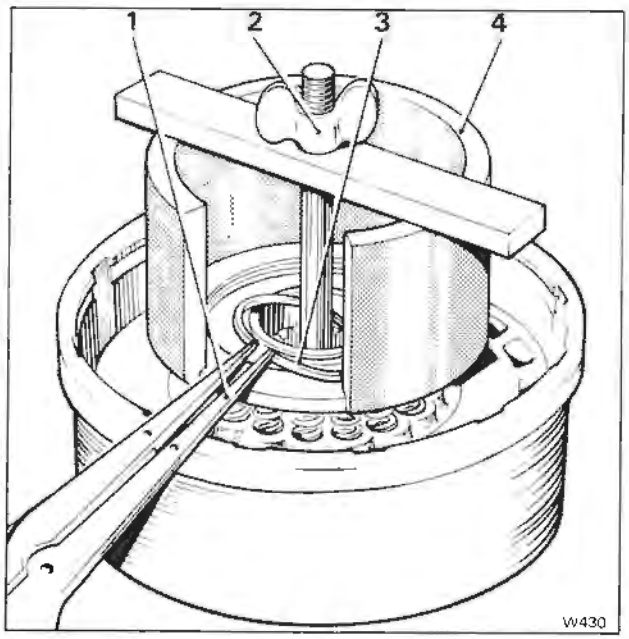

Fig. T102 Removing and fitting the direct clutch housing snap ring
1 Snap ring pliers
2 Spring compressor
3 Snap ring
4 Compressor adapter (seated on retainer)

Direct clutch, sun gear shaft and intermediate roller/sprag clutch assembly - To inspect

1. Wash all parts in clean paraffin, **except** the composition faced clutch plates. Dry all the parts with compressed air.
2. Examine the roller/sprag assembly.
3. Examine the inner cam and outer race for scratches or wear.
4. Examine the clutch housing for cracks. Ensure that the oil passages are clear and look for excessive wear on the clutch plate driving lugs.
5. Examine the composition faced and steel clutch plates.
6. Composition plates should be dried with compressed air and the composition surfaces inspected for.
(a) Pitting and flaking.
(b) Wear.
(c) Glazing.
(d) Cracking.
(e) Charring.
(f) Metal particles embedded in the lining.

If a composition faced plate exhibits any of the above conditions, fit new plates.

7. Steel plates should be inspected for heat discolouration. If the surface is smooth and an even colour is indicated, the plates can be used again. If severe heat spot discolouration or surface scuffing is indicated, fit new plates.
8. Examine the back plate for scratches or other damage.
9. Examine the sun gear shaft for cracks. Examine the splines for damage, the bushes for scoring and the ground bush journals for damage. Ensure the oil feed hole is clear.
10. Examine the housing for free operation of the check ball.
11. Examine the piston for cracks.
12. Examine the **fourteen** springs for collapsed coils or distortion. If any of these springs requires replacement, fit **sixteen** new springs.

13. Examine the front friction band for wear at the anchor and apply lugs, also for the presence of metallic particles in the band lining. Examine the band lining for cracks, flaking, burning, and for the lining becoming loose.

Direct clutch and intermediate roller/sprag clutch assembly - To assemble

1. Lubricate new inner and outer clutch piston seals with clean transmission fluid. Lubricate the seal grooves in the direct clutch piston, then fit the seals with the lips facing away from the spring pockets.
2. Lubricate a new centre seal with clean transmission fluid. Lubricate the seal groove in the direct clutch housing, then fit the seal with the lip uppermost.

Note
Production built transmissions use a direct clutch housing with a check ball. If the housing requires replacement and the replacement housing does not contain a check ball, replace the direct clutch piston with the service piston which has a check ball. **Either the direct clutch housing and/or the piston must contain a check ball otherwise damage may occur to the direct clutch and related parts.**

3. Fit the inner seal protector (J-21362) over the direct clutch hub.
4. Fit the outer seal protector (J-21409) into the clutch housing and fit the piston, turning it clockwise as it is pushed down. Remove the tools.
5. Fit the **fourteen** clutch release springs into the spring pockets in the clutch piston, leaving two pockets directly opposite one another with no springs. If replacement springs are to be fitted, fit all **sixteen.**
6. Position the spring retainer over the springs.
7. Using the clutch spring compressor (J-2590), compress the springs ensuring that the retainer does not catch in the snap ring groove. Fit the snap ring, then remove the tool.

Note
Ensure that the clutch release springs are not leaning. If necessary, push the springs into an upright position using a small screwdriver.

8. Fit the direct clutch apply ring into the clutch housing.
9. Lubricate the four flat steel clutch plates, five composition faced plates and one waved steel plate with clean transmission fluid. Then fit the plates into the clutch housing (see Fig. T103). Commence with the waved steel plate and then alternate composition and steel plates.

Note
Do not use radially grooved compostion plates at this point of the assembly.

10. Fit the direct clutch backing plate over the clutch plates and fit the large snap ring.

Note
Install rollers that may have come out of the roller cage by compressing the energising spring with the forefinger and inserting the rollers from the outside.

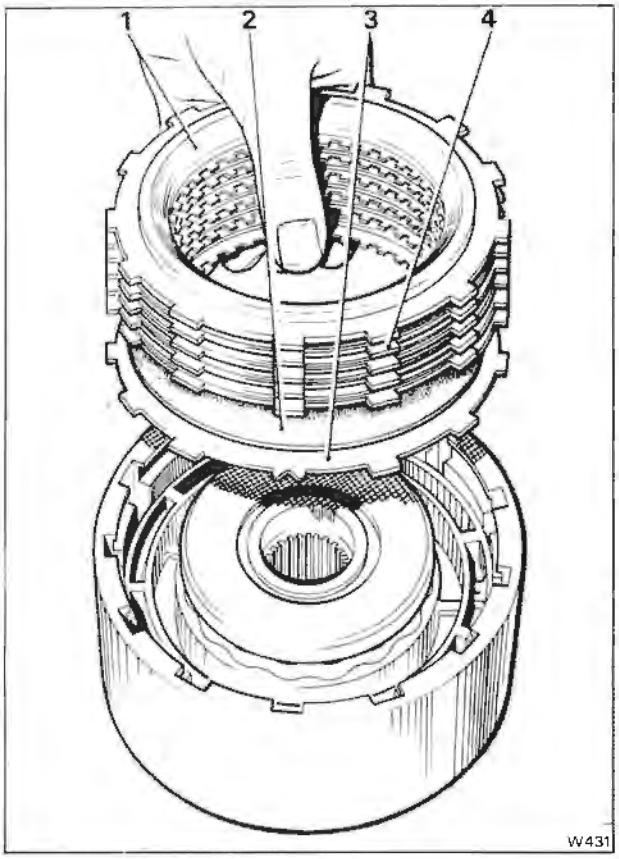

Fig. T103 Fitting the direct clutch plates
1 Backing plate
2 Composition plate (5)
3 Waved steel plate (1)
4 Flat steel plate (4)

11. Turn the clutch unit over and fit the roller/sprag clutch assembly onto the intermediate clutch inner cam.
12. Fit the intermediate roller/sprag outer race with a clockwise turning motion.

Note
When fitted, the outer race should not turn anti-clockwise.

13. Fit the roller/sprag clutch retainer (cup side down) and fit the snap ring.

Turbine shaft, forward and direct clutches, sun gear shaft and front band - To fit

1. Fit the front band so that the band anchor hole fits over the band anchor pin and the band apply lug faces the servo hole (see Fig. T104).
2. Fit the sun gear shaft with the longer splined end innermost.
3. Fit the direct clutch housing and intermediate roller/sprag assembly onto the centre support as follows.
4. Ensure that the ends of the oil sealing rings on the centre support are interlocked, and that the rings are lubricated.

Printed in England
© Rolls-Royce Motors Limited 1982
September 1982
TSD 4200

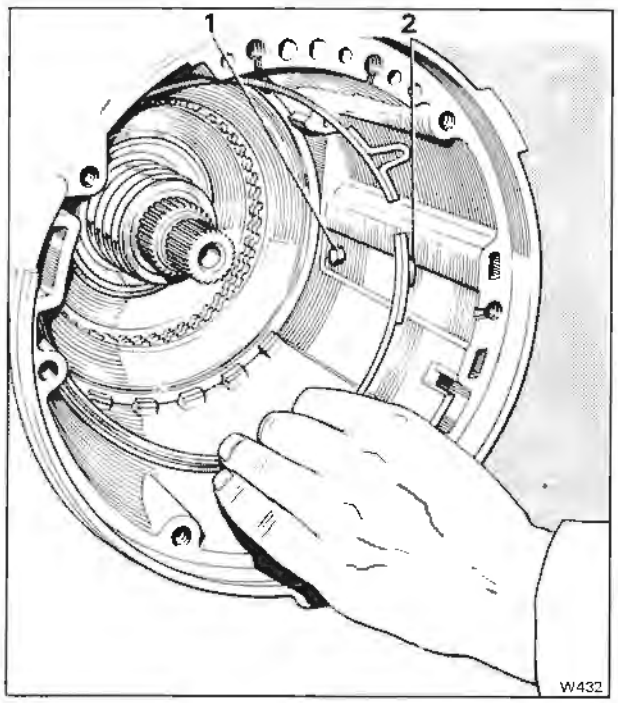

Fig. T104 Fitting the front band
1 Anchor pin
2 Front band location

5. Carefully slide the direct clutch housing onto the centre support sleeve, at the same time engage the housing internal splines with the splines on the sun gear shaft.
6. Ensure that the clutch housing hub 'bottoms' on the sun gear shaft and that the splines on the forward end of the sun gear shaft are flush with the splines in the direct clutch housing.
Note
It will be necessary to rotate the clutch housing to allow the roller/sprag outer race to line up with the intermediate clutch plates. If necessary, remove the direct clutch driving and driven plates to facilitate the handling of the housing.
7. Fit the bronze thrust washer onto the forward clutch hub; retain the washer in position with petroleum jelly.
8. Position the transmission horizontally in the transmission holding fixture, then fit the forward clutch assembly and the turbine shaft.
9. Ensure that the mainshaft 'bottoms' on the end of the forward clutch hub.
10. It will be necessary to rotate the clutch housing to allow the direct clutch driving hub to line up with the clutch plates in the direct clutch.
11. When the forward clutch is correctly seated it should be approximately 31,75 mm. (1.250 in.) from the oil pump face in the transmission casing.
Note
The missing internal splines in the forward clutch hub are lubrication passages and do not have to be aligned with any particular splines on the mainshaft.
12. Fit the oil pump.

Section T19

Intermediate clutch, gear unit, centre support and reaction carrier

The intermediate clutch comprises three steel plates (1 waved and 2 flat), three composition plates and an apply piston. The steel plates are slotted directly into the transmission casing and the composition plates engage in splines machined in the intermediate clutch outer race.

The compound planetary gear unit consists of an internal gear, which is splined onto the mainshaft, an output planet carrier and pinions, an output shaft which is mechanically connected to the output carrier and a sun gear which is splined onto the sun gear shaft (see Fig. T105).

The centre support is keyed and bolted to the transmission casing and forms part of the reaction carrier roller assembly. The oil delivery sleeve, which supplies oil pressure to the direct clutch and the intermediate roller is an integral part of the centre support. The support also houses the piston that applies the intermediate clutch.

The reaction carrier comprises a housing, a set of planet pinions and the outer race of the Low roller.

When the mainshaft rotates, the splined internal gear is driven clockwise. This causes the rear planet pinions to idle clockwise and drive the sun gear anti-clockwise.

The front and rear sun gears are integral so they turn as one. As a result, the front planet pinions also idle clockwise and drive the front internal gear clockwise.

The front internal gear is an integral part of the output carrier and is thus connected to the output shaft. This reacts with a force on the front pinions which are trying to drive the front internal gear clockwise. This reaction tends to rotate the front carrier assembly anti-clockwise instead of allowing the force to turn the internal gear and output shaft against the weight of the car.

To make the gear set effective in driving the car, a roller assembly is used to hold the carrier against anti-clockwise rotation. This roller assembly is in effect a one-way clutch which allows a rotating part to turn one way only.

The roller assembly is fitted in such a manner that its elements will lock and prevent the reaction carrier from rotating anti-clockwise. This provides the required reaction and causes the front planet pinions to drive the front internal gear and output

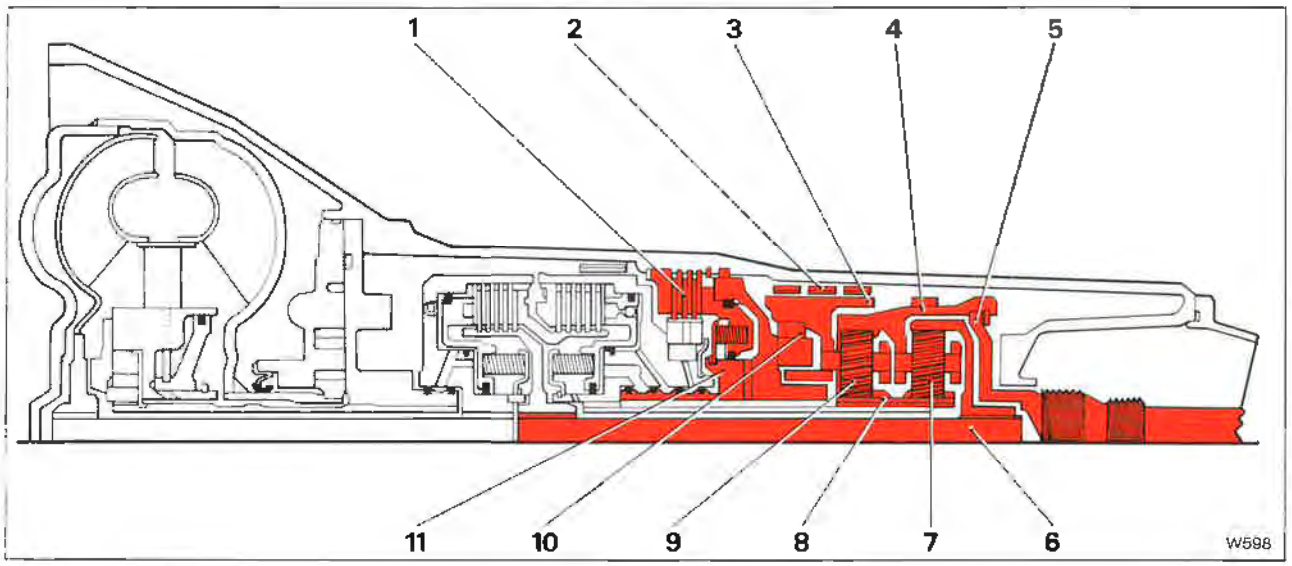

Fig. T105 Sectioned view of the transmission showing the intermediate clutch and gear unit

1 Intermediate clutch
2 Rear band
3 Reaction carrier
4 Output carrier
5 Output shaft driving flange
6 Mainshaft
7 Rear planet pinions
8 Sun gear
9 Front planet pinion
10 Roller clutch assembly
11 Centre support

Intermediate clutch, gear unit, centre support and reaction carrier

Printed in England
© Rolls-Royce Motors Limited 1981

shaft in reduction at a ratio of approximately 2.5:1. This gear ratio, coupled with a maximum torque converter reduction of approximately 2:1 gives an overall ratio of almost 5:1 in first gear.

As the speed of the car increases, less torque multiplication is required so that the coupling will become more efficient, therefore, it is desirable to move to a lower ratio. This is accomplished with the aid of the intermediate roller/sprag assembly, intermediate clutch and sun gear shaft.

A sprag assembly is a device having irregular shaped members wedged between inner and outer races, similar to a roller assembly. It permits a part to rotate in one direction only.

When the intermediate clutch is applied, the drive plates become locked to the reaction plates and by doing so they lock the intermediate roller/sprag outer race to the transmission case.

This, in effect, holds the clutch housing, sun gear shaft and sun gear against anti-clockwise rotation. When the sun gear is stationary, the power flow is as follows.

Converter output is transmitted clockwise through the forward clutch to the mainshaft and rear internal gear. As the rear internal gear turns clockwise, the rear pinions rotate clockwise on their pins and 'walk around' the stationary sun gear. This moves the output carrier and output shaft clockwise in reduction at a ratio of approximately 1.5:1 (or second gear).

The front gear unit is not required for second gear operation. However, because the output carrier is integral with the front internal gear, the front internal gear runs clockwise in reduction. This causes the front planet pinions to run clockwise around the stationary sun gear, turning the reaction carrier clockwise. This clockwise rotation of the reaction carrier causes the rear roller assembly to overrun or to become ineffective.

As the speed of the car increases further, a lower ratio is again required. The transmission is moved to third or direct gear. This is achieved by applying the direct clutch as well as the forward clutch so that both the rear internal gear and the sun gear rotate at the same speed.

In order to obtain Reverse, a rear friction band is used. This band locks the reaction carrier against clockwise rotation which would cause the Low or rear roller to overrun. Power flow through the transmission in Reverse is as follows.

Turbine torque from the converter is transmitted to the forward clutch housing; the forward clutch is released, thus disconnecting the flow of power to the mainshaft and rear internal gear. Instead of power flowing through the forward clutch, it flows from the turbine shaft through the forward clutch housing and through the direct clutch hub to the direct clutch which is applied. This applies power to the sun gear shaft and sun gear, turning them clockwise. With the sun gear driving clockwise, the front pinions revolve anti-clockwise as idlers. This drives the front internal gear and output shaft anti-clockwise or in a reverse direction. The overall ratio in Reverse with maximum converter ratio and gear reduction is approximately 4:1.

In Intermediate range (second gear) with the accelerator pedal released, the car will slow down, using the engine as a brake. In this situation, however, the rear wheels will drive the transmission through the output shaft and as a result, the intermediate roller/sprag would attempt to overrun. To prevent this happening the front band is applied to the direct clutch housing, holding it stationary, thus keeping the transmission in second gear to provide effective engine braking.

For even greater engine braking, the transmission can be placed into Low range. At speeds below approximately 64 k.p.h. (40 m.p.h.) the transmission will move to first gear. When the car is in first gear and the throttle is closed, the Low roller tends to overrun. When the Low/Reverse band is applied, the reaction carrier is prevented from overrunning the roller and the transmission is retained in first gear.

The following is a summary of the flow of power through the transmission in various gears.

Summary of power flow

Neutral - Engine running
Forward clutch released, direct clutch released, intermediate clutch released, low roller clutch ineffective, front band released, intermediate roller/sprag clutch ineffective, rear band released.

In Neutral, all clutches and bands are released; therefore, no power is transmitted from the torque converter turbine to the planetary gear train or output shaft.

Drive range - First gear
Forward clutch applied, direct clutch released, intermediate clutch released, low roller clutch effective, front band released, intermediate roller/sprag clutch ineffective, rear band released.

With the gear range selector in Drive range, the forward clutch is applied. This delivers turbine torque to the mainshaft and turns the rear internal gear clockwise. Clockwise motion of the rear internal gear causes the pinions to turn clockwise, driving the sun gear anti-clockwise. In turn, the sun gear drives the front pinions clockwise, driving the front internal gear, output carrier and output shaft clockwise at a reduction of approximately 2.5:1. The reaction of the front pinions against the front internal gear is taken by the reaction carrier and roller clutch assembly to the transmission case. (The approximate stall ratio equals 5:1.).

Drive range - Second gear
Forward clutch applied, direct clutch released, intermediate clutch applied, low roller clutch ineffective, front band released, intermediate roller/sprag clutch effective, rear band released.

In second gear, the intermediate clutch is

applied to allow the intermediate roller/sprag clutch to hold the sun gear against anti-clockwise rotation. Turbine torque, through the forward clutch, is applied clockwise through the mainshaft, to the rear internal gear. Clockwise rotation of the rear internal gear turns the rear pinions clockwise against the stationary sun gear. This causes the output carrier and outout shaft to turn clockwise at a reduction ratio of approximately 1.5:1.

Drive range - Third gear
Forward clutch applied, direct clutch applied, intermediate clutch applied, low roller clutch ineffective, front band released, intermediate roller/sprag ineffective, rear band released.

In direct drive, engine torque is transmitted to the converter, then through the forward clutch to the mainshaft and the rear internal gear. Because the direct clutch is applied, equal power is transmitted also to the sun gear shaft and the sun gear. Since both the sun gear and the internal gears are now turning at the same speed, the planetary gear set is essentially locked and turns as one unit in direct drive at a ratio of 1:1.

Reverse
Forward clutch released, direct clutch applied, intermediate clutch released, low roller clutch ineffective, front band released, intermediate roller/sprag clutch ineffective, rear band applied.

In reverse, the direct clutch is applied to transmit turbine torque from the forward clutch housing to the sun gear shaft and sun gear. The rear band is applied; this prevents the reaction carrier from turning clockwise. Clockwise torque to the sun gear causes the front pinions and front internal gear to turn anti-clockwise in reduction. The front internal gear is directly connected to the output shaft, thus providing the reverse output gear ratio of approximately 2:1. The reverse torque multiplication at stall (converter and gear ratios) is approximately 4:1.

Intermediate clutch, gear unit, centre support and reaction carrier - To remove
Before the intermediate clutch, gear unit and their associated parts can be removed, the transmission must be removed from the car.

Remove the following units.

1. Sump, strainer and intake pipe assembly.
2. Control valve unit.
3. Rear servo.
4. Control valve spacer, check balls and front servo.
5. Oil pump.
6. Turbine shaft, forward clutch, direct clutch, sun gear shaft and front band.
7. Remove the centre support bolt from the transmission case. This is the socket-headed cap screw located in the lower face of the transmission case at the rear of the control valve unit oil passages.
8. Remove the snap ring which secures the intermediate clutch back plate.

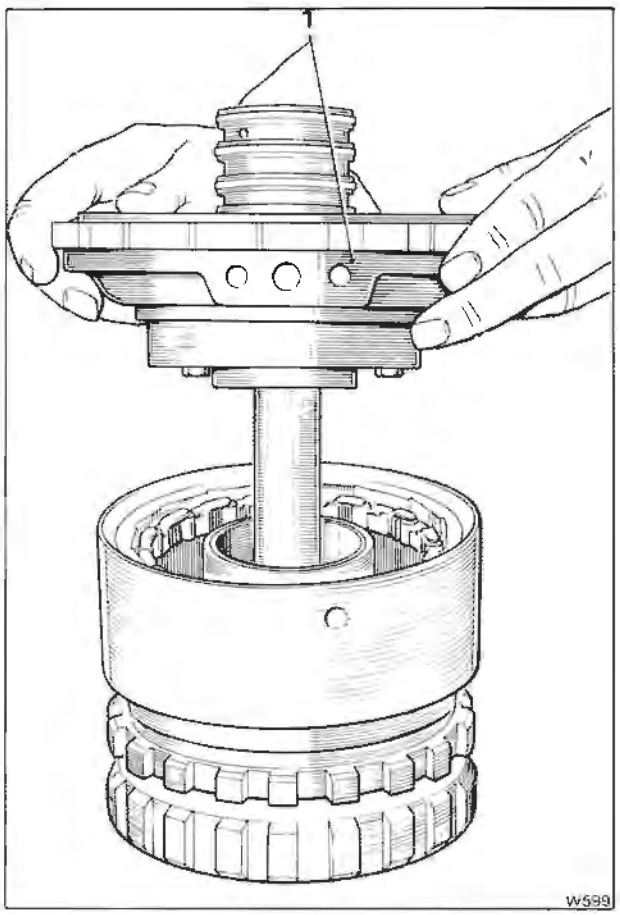

Fig. T106 Removing the centre support assembly
1 Centre support

9. Remove the back plate then withdraw the three composition plates and the three steel plates (two flat and one waved).
10. Remove the snap ring which retains the centre support in the case.
11. Remove the complete gear unit assembly by lifting with the removal tool (J-21795) and a slide hammer (J-7004).
12. Remove the output shaft thrust washer from either the output shaft or the case.
13. Hold the gear unit assembly with the output shaft pointing down (i.e. through a suitable hole in the work bench).
14. Remove the rear unit selective washer from the transmission case.
15. Remove the support to case spacer.
16. Remove the rear band assembly. To facilitate removal, rotate the band lugs away from the pins and pull the band assembly out of the transmission case.
17. Remove the centre support assembly from the reaction carrier (see Fig. T106).
18. Withdraw the centre support to reaction carrier thrust washer.

Note
The thrust washer and the race may have adhered to the back of the centre support. If so, remove them

Printed in England
© Rolls-Royce Motors Limited 1981
March 1981
TSD 4200

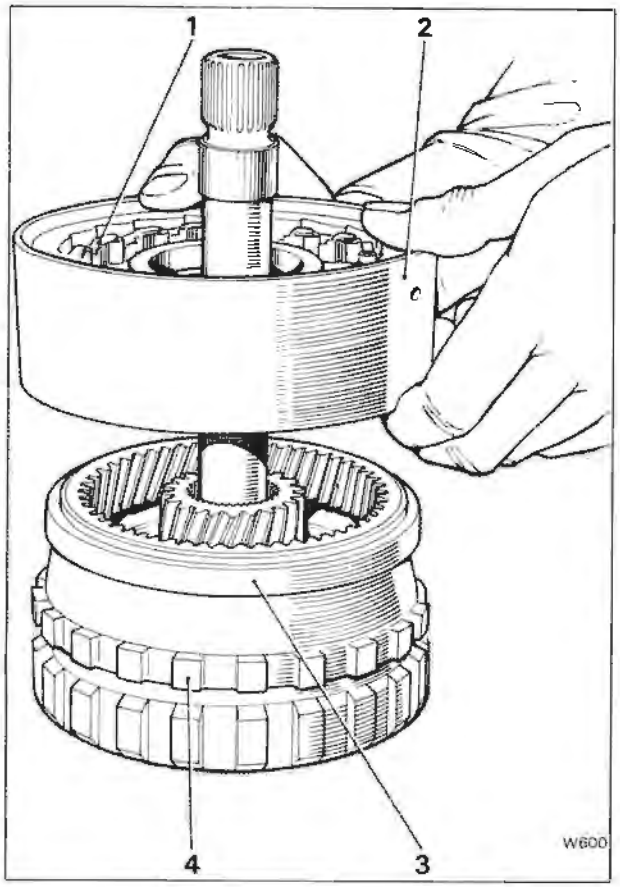

Fig. T107 Removing the reaction carrier assembly
1 Roller clutch assembly
2 Reaction carrier
3 Gear ring
4 Output carrier

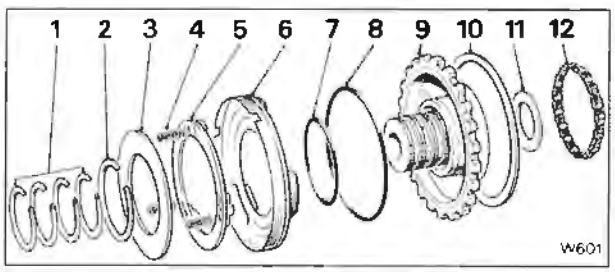

Fig. T108 Centre support assembly - exploded
1 Oil seal rings
2 Snap ring
3 Intermediate clutch spring retainer
4 Intermediate clutch release springs
5 Intermediate clutch spring guide
6 Intermediate clutch piston
7 Intermediate clutch inner seal
8 Intermediate clutch outer seal
9 Centre support assembly
10 Support to case spacer
11 Thrust washer
12 Roller clutch assembly

from the centre support.
19. Remove the reaction carrier and roller clutch assembly from the output carrier (see Fig. T107); remove the roller clutch assembly and spacer ring from the reaction carrier.

Centre support and intermediate clutch piston - To dismantle
1. Remove and discard the four oil seal rings from the centre support (see Fig. T108).
2. Remove the snap ring (see Fig. T109).
3. Remove the spring retainer and the clutch release springs.
4. Remove the intermediate clutch piston from the centre support.
5. Remove and discard the inner and outer seals from the clutch piston.
Note
Do not remove the three setscrews which secure the roller clutch inner race to the centre support.

Centre support and intermediate clutch piston - To inspect
1. Wash all parts in clean paraffin, then dry with compressed air.
2. Examine the roller clutch inner race for scratches and indentations. Ensure that the lubrication hole is clear.
3. Examine the bush for scoring or wear.
4. Ensure that the oil ring grooves are clean and are not damaged.
5. Check that the lubrication passages are clear and are not interconnected, using compressed air.
6. Examine the piston bore in the centre support for scratches or damage.
7. Examine the piston seal grooves for damage and ensure that they are clean.
8. Examine the piston for cracks or porosity.
9. Examine the springs for collapsed coils or signs of distortion. Check the spring length against that of a new spring before deciding whether to renew the complete set of springs.

Centre support and intermediate clutch piston - To assemble
1. Lubricate a new inner and a new outer seal with clean transmission fluid. Lubricate the seal grooves in the intermediate clutch piston and fit the seals with the lips facing away from the spring pockets.
2. Fit the intermediate clutch inner seal protector (J-21363) over the centre support hub.
3. Fit the intermediate clutch piston (see Fig. T110). Ensure that it seats fully in the centre support.
4. Fit the spring guide and the three clutch release springs into the pockets in the clutch piston.
5. Position the spring retainer centrally over the springs.
6. Compress the spring retainer, ensuring that the retainer does not catch in the snap ring groove. Fit the snap ring.
7. Fit four new oil sealing rings onto the centre support.

Gear unit - To dismantle (see Fig. T111)

1. Remove the centre support to sun gear races and thrust bearing. The outer race may have been removed with the centre support.
2. Remove the sun gear from the output carrier assembly.
3. Remove the reaction carrier to output carrier thrust washer and front internal gear ring.
4. Invert the gear unit on the bench so that the mainshaft is pointing downwards.
5. Remove the snap ring which retains the output shaft in the output carrier; remove the output shaft.
6. Remove the thrust bearing and races from the rear internal gear.
7. Withdraw the rear internal gear and mainshaft from the output carrier; remove the thrust bearing and races from the inner face of the rear internal gear.
8. Remove the snap ring from the end of the mainshaft, then remove the rear internal gear.

Output shaft - To inspect

1. Wash the output shaft in clean paraffin, then dry with compressed air.
2. Examine the bushing for wear.
3. Examine the bearing and thrust washer faces for damage.
4. Examine the governor drive gear for rough or damaged teeth.
5. Examine the splines for damage.
6. Examine the drive lugs for damage.
7. Examine the speedometer drive gear for rough or damaged teeth. If a gear is badly worn or damaged, it can be renewed as follows.

Speedometer drive gear - To remove

Note

A nylon speedometer drive gear is installed **only** at the factory. All replacement drive gears are manufactured from steel.

1. If a **nylon gear** is fitted to the shaft, depress the retaining clip and slide the gear off the output shaft (see Fig. T112).
2. If a **steel gear** is fitted to the shaft, install the speedometer drive gear removal tools (J-21427 and J-9578) (see Fig. T113).
3. Tighten the bolt on the puller until the gear is free on the shaft.
4. Remove the tools and the gear from the shaft.

Speedometer drive gear - To fit

1. To fit a **nylon gear,** align the slot in the speedometer drive gear with the hole in the output shaft, then install the retaining clip.
2. To fit a **steel gear,** lightly lubricate the bore of the gear, then fit the gear over the output shaft.
3. Press the gear down the shaft using a suitable length of tube and a press, until the distance from the rear face of the gear to the end of the output shaft measures 291.31 mm.(11.469 in.) (see Fig. T114).

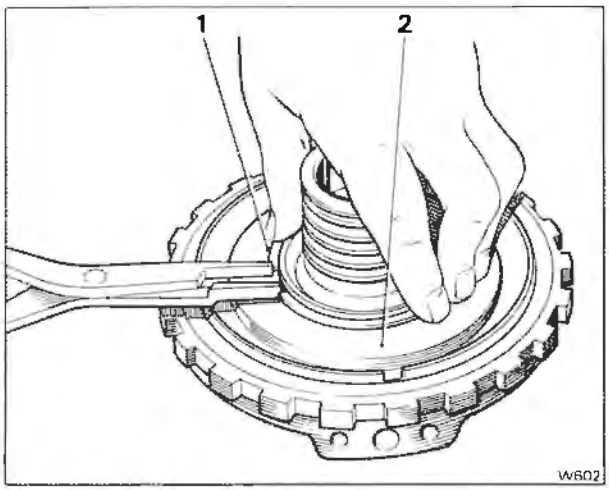

Fig. T109 Removing and fitting the intermediate clutch piston snap ring
1 Snap ring
2 Spring retainer

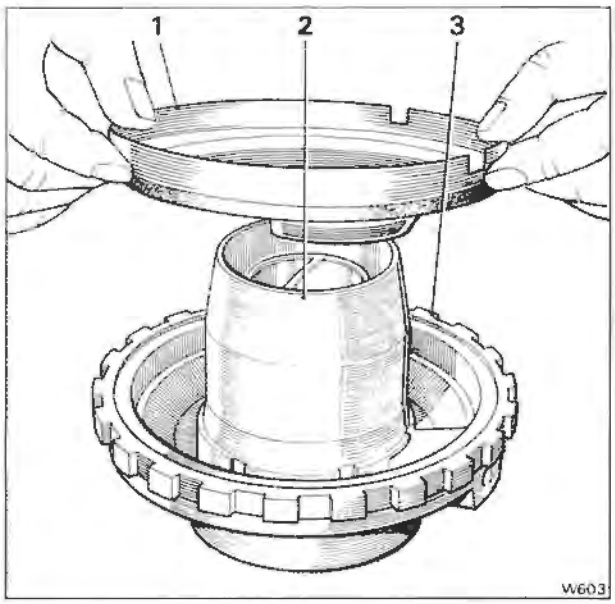

Fig. T110 Fitting the intermediate clutch piston
1 Intermediate clutch piston
2 Guide sleeve
3 Centre support

Mainshaft - To inspect

1. Wash the mainshaft in clean paraffin, then dry with compressed air.
2. Examine the shaft for cracks or distortion.
3. Examine the splines for damage.
4. Examine the ground journals for scratches or damage.
5. Examine the snap ring groove for damage.
6. Ensure the oil lubrication holes are clear.

Printed in England
© Rolls-Royce Motors Limited 1981

Rear internal gear and sun gear - To inspect
1. Wash the rear internal gear and the sun gear in clean paraffin, then dry with compressed air.
2. Examine all the gear teeth for wear or damage.
3. Examine the splines for damage.
4. Examine the gears for cracks.

Output carrier assembly - To inspect
1. Wash the output carrier assembly in clean paraffin, then dry with compressed air.
2. Examine the front internal gear for damaged teeth.
3. Examine the pinion gears for damage, rough bearings or excessive side movement.
4. Check the end-float of the pinions with the aid of a feeler gauge (see Fig. T115). The end-float should be between 0,23 mm. and 0,61 mm. (0.009 in. and 0.024 in.).
5. Examine the parking pawl lugs for cracks or damage.
6. Examine the splines which drive the output shaft for damage.
7. Examine the front internal gear ring for flaking or cracks.

Reaction carrier assembly - To inspect
1. Examine the surface on which the rear band applies, for signs of burning or scoring.
2. Examine the roller outer race for scoring or wear.
3. Examine the thrust washer surfaces for signs of scoring or wear.
4. Examine the bush for damage. If the bush is damaged, the carrier must be renewed.
5. Examine the pinion gears for damage, rough bearings, or excessive side movement.
6. Check the pinion end-float. This should be between 0,23 mm. and 0,61 mm. (0.009 in. and 0.024 in.).

Pinion gears - To renew
1. Support the carrier assembly on its **front** face.
2. Using a 12,70 mm. (0.50 in.) diameter drill, remove the stake marks from the end of the pinion pins. Ensure that the drill does not remove any

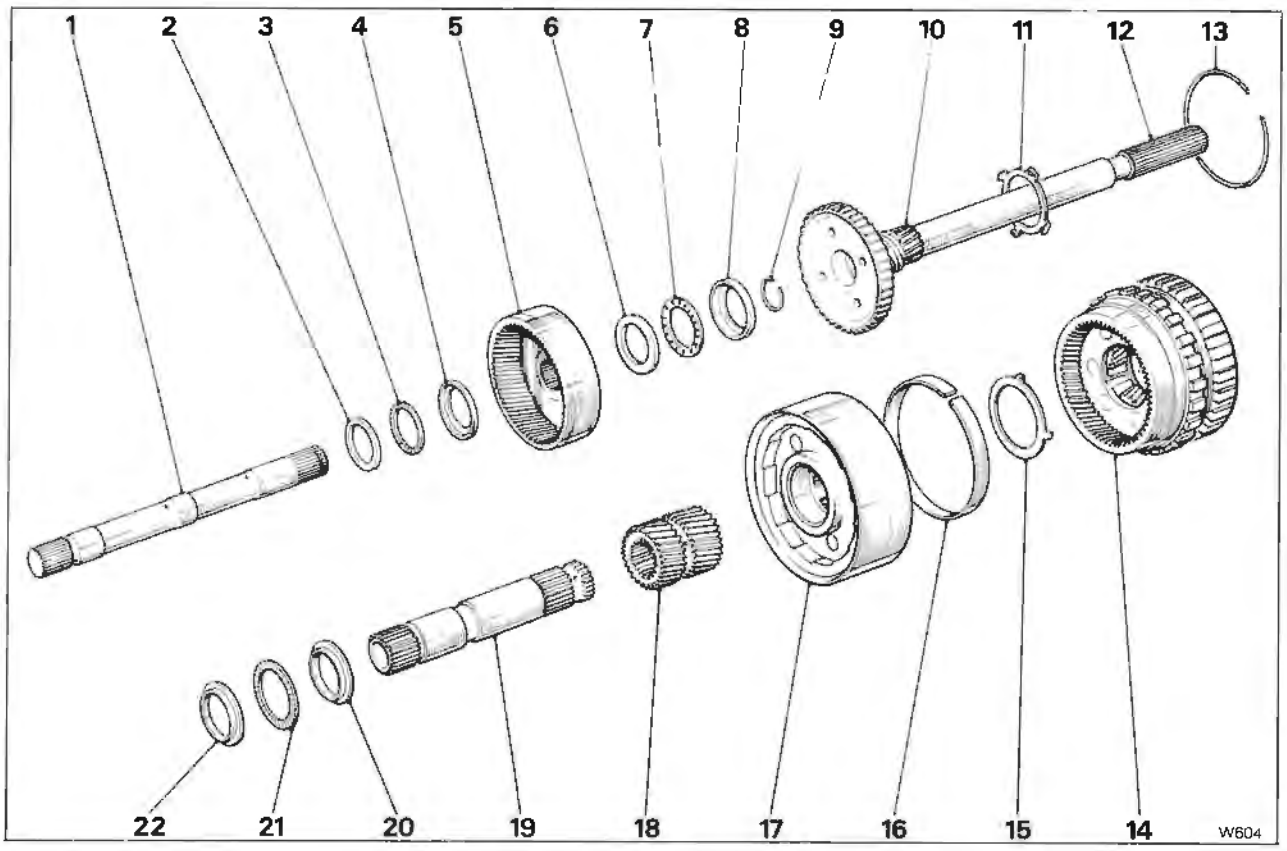

Fig. T111 Gear unit - exploded

1 Mainshaft
2 I/D flanged race
3 Thrust bearing
4 O/D flanged race
5 Rear internal gear
6 I/D flanged race
7 Thrust bearing
8 O/D flanged race
9 Snap ring
10 Speedometer drive gear
11 Thrust washer
12 Output shaft
13 Snap ring
14 Output carrier assembly
15 Thrust washer
16 Front internal gear ring
17 Reaction carrier assembly
18 Sun gear
19 Sun gear shaft
20 I/D flanged race
21 Thrust bearing
22 I/D flanged race

metal from the carrier as this will weaken the component and could result in a cracked carrier.
3. Using a tapered punch, drive or press the pinions out of the carrier.
4. Remove the punch, gears, thrust washers and needle roller bearings.
5. Examine the pinion thrust faces in the pinion gear pockets for burrs and stone off as necessary. Thoroughly wash the carrier in clean paraffin and dry with compressed air.
6. Ensure that the new gears are clean and free from burrs, then fit the eighteen needle bearings into each pinion gear. Use petroleum jelly to retain the bearings and use a pinion pin as a guide when fitting the bearings.
7. Fit a bronze and a steel thrust washer on each side of the pinion gear, with a steel washer next to the gear. Hold the washers in place with a smear of petroleum jelly (see Fig. T116).
8. Fit the pinion gear assembly into position in the carrier, then fit a pilot pin through the rear face of the assembly to centralise and hold the parts in position.
9. Drive a new pinion pin into position from the front, rotating the pinion whilst the pin is being driven in.
10. Ensure that the headed end of the pin is flush or below the face of the carrier.
11. Secure the punch to be used for staking the pins in a bench vice, so that it can be used as an anvil.
12. Support the carrier with the head of the pin resting on the punch, then using a chisel with a radiused end stake the opposite end of the pin in three places (see Fig. T117).

Note
Both ends of the pin must lie below the face of the carrier, otherwise a foul may occur between the pin and the adjacent component.

13. Repeat the procedure for the remaining pins.

Roller clutch - To inspect
1. Wash the assembly in clean paraffin, then dry with compressed air.
2. Examine the roller clutch for damaged rollers or springs.
3. Examine the roller cage for damage.

Intermediate clutch plates and rear band - To inspect
1. Examine the condition of the composition faced and steel plates. **Do not** diagnose a composition drive plate by colour.
2. Dry composition faced plates with compressed air and inspect the composition face for.

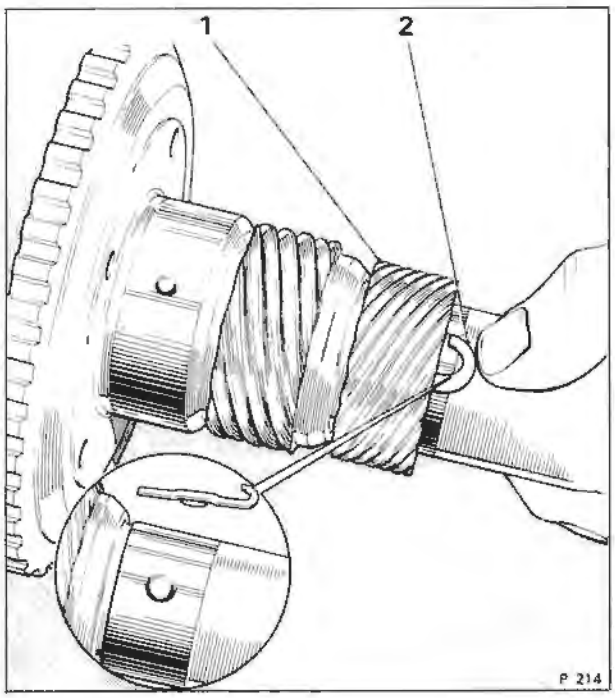

Fig. T112 Removing a nylon speedometer drive gear
1 Nylon gear
2 Retaining clip

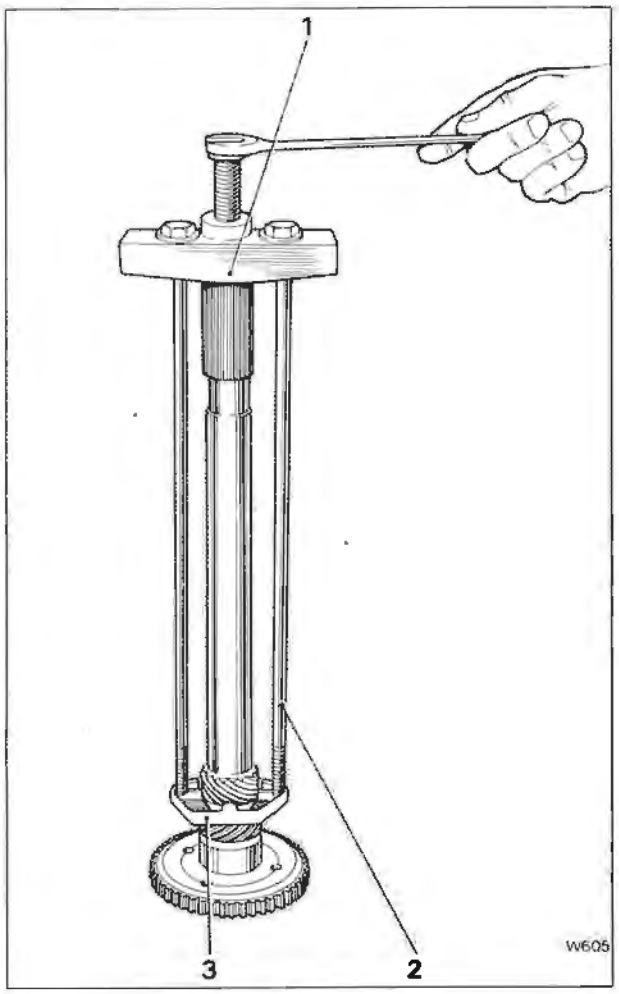

Fig. **T113 Removing a steel speedometer drive gear**
1 (J-9578)
2 Removal bolts
3 (J-21427)

Printed in England
© Rolls-Royce Motors Limited 1981
March 1981
TSD 4200

(a) Pitting and flaking.
(b) Wear.
(c) Glazing.
(d) Cracking.
(e) Charring.
(f) Metal particles embedded in the lining.
If any of the above conditions are evident, replacement is required.
3. Wipe steel plates dry and check for heat discolouration. If the surface is smooth and an even colour is indicated, the plates should be used again. If severe heat spot discolouration or surface scuffing is indicated, the plates must be replaced.
4. Examine the rear band for cracks or distortion.
5. Examine the ends of the band for damage at the anchor lugs and the apply lug.
6. Examine the lining for cracks, flaking and burning.
7. Ensure that the lining is secured to the band.

Gear unit and centre support - To assemble
1. Ensure that all parts are clean. Lightly lubricate with clean transmission fluid all bushes, journals, gears, bearings, etc.
2. Fit the rear internal gear onto the mainshaft; fit the circlip.
3. Fit the races and thrust bearing onto the inner face of the rear internal gear, retaining them with a smear of petroleum jelly (see Fig. T118).
4. Fit the large diameter race first with the outer flange uppermost.

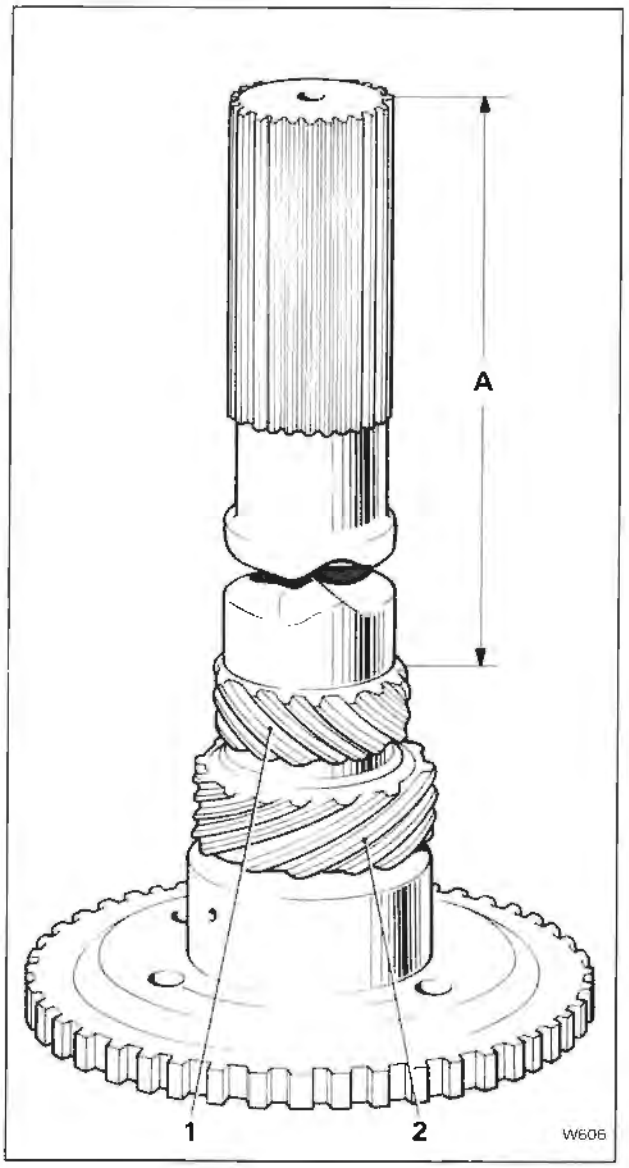

Fig. T114 Speedometer driving gear - fitted
1 Speedometer driving gear
2 Governor driving gear
A 291,30 mm. (11.469 in.)

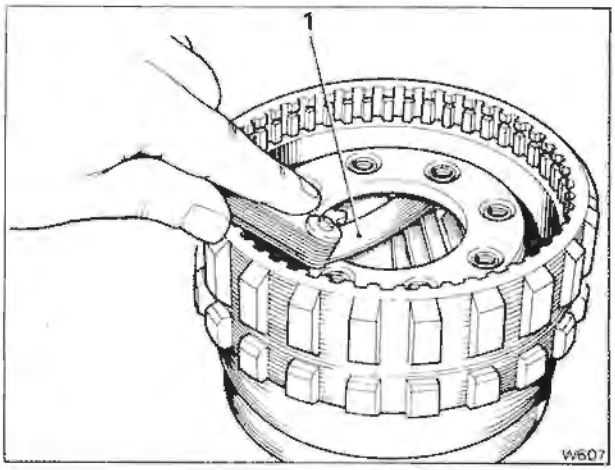

Fig. T115 Checking the output carrier pinion end-float
1 0,23 mm. to 0,61 mm. (0.009 in. to 0.024 in.)

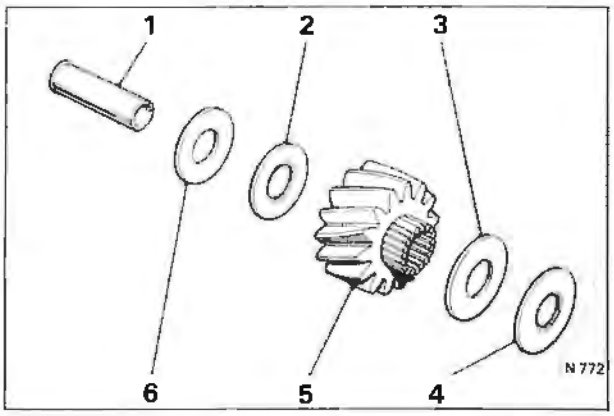

Fig. T116 Planet pinion gear - exploded
1 Pinion pin
2 Steel washer
3 Steel washer
4 Bronze washer
5 Planet pinion
6 Bronze washer

5. Fit the thrust bearing into the race.
6. Fit the smaller diameter race over the bearing with the inner flange towards the bearing.
7. Ensure that the pinion gears are adequately lubricated then fit the output carrier onto the mainshaft so that the pinion gears mesh with the rear internal gear.
8. Position the assembly with the mainshaft pointing downwards through a hole in the bench. Take care not to damage the shaft.
9. Fit the races and thrust bearing onto the outer face of the rear internal gear, retaining them with a smear of petroleum jelly. The small diameter (flanged I/D) race must be fitted first with the flange uppermost (see Fig. T119).
10. Fit the thrust bearing into the race.
11. Fit the large diameter (flanged O/D) race against the bearing with the flange cup over the bearing.
12. Fit the output shaft into the output carrier and fit the circlip.
13. Smear the output shaft to case metal thrust washer with petroleum jelly, then fit the washer into position.
14. Turn the assembly over so that the output shaft points downwards.
15. Smear the reaction carrier to output carrier thrust washer with petroleum jelly, then fit the washer into the output carrier so that the bent tabs engage in the tab pockets.
Note
The factory built transmissions use a non-metal washer, however, the service replacement thrust washer is metal.
16. Fit the sun gear; ensure that the end with the chamfered inside diameter faces downwards.
17. Fit the gear ring over the output carrier.

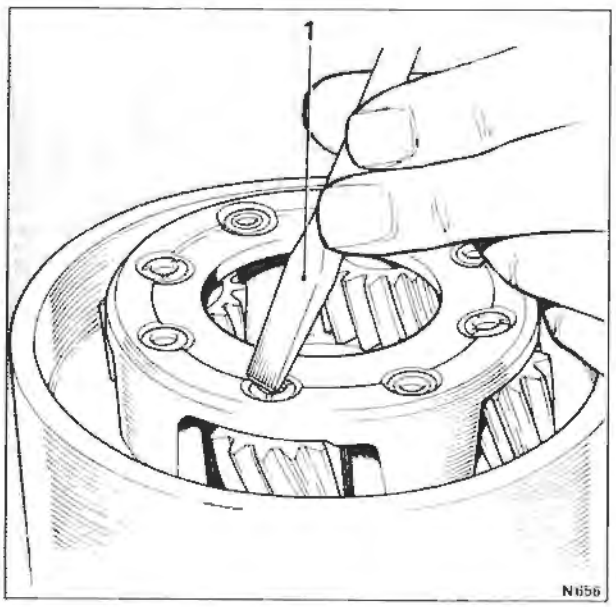

Fig. T117 Staking a pinion pin
1 Chisel

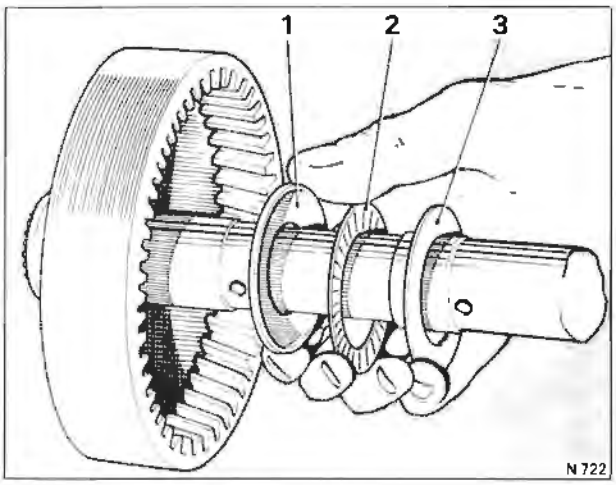

Fig. T118 Fitting the races and thrust bearing to the inner face of the rear internal gear
1 O/D flanged race
2 Thrust bearing
3 I/D flanged race

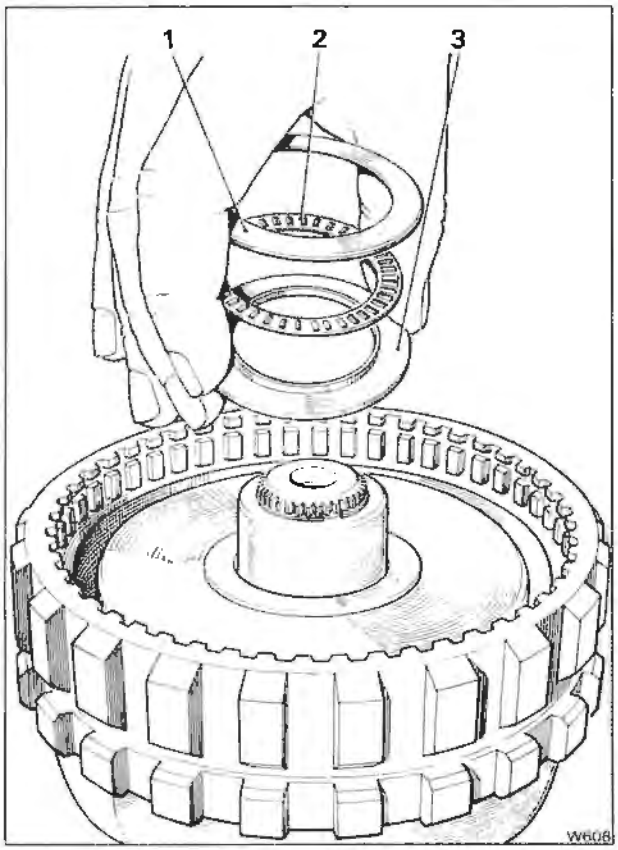

Fig. T119 Fitting the races and thrust bearing to the outer face of the rear internal gear
1 O/D flanged race
2 Thrust bearing
3 I/D flanged race

Printed in England
© Rolls-Royce Motors Limited 1981
March 1981
TSD 4200

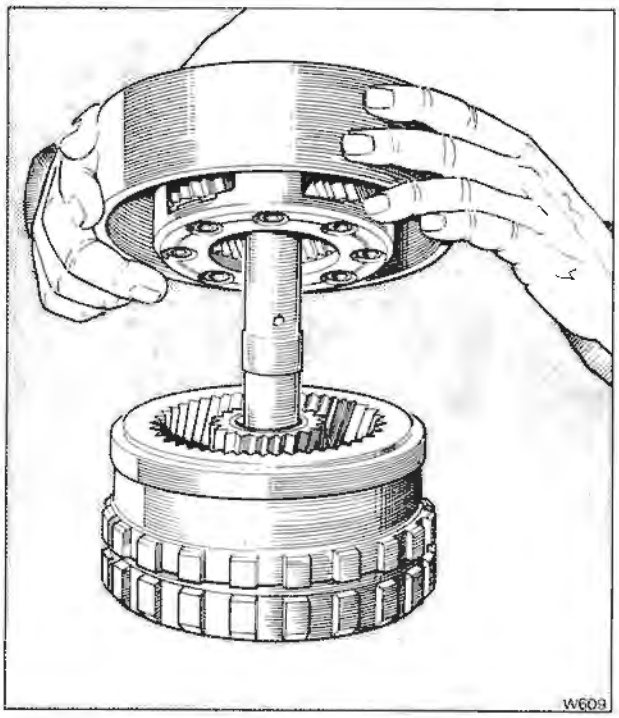

Fig. T120 Fitting the reaction carrier to the output carrier

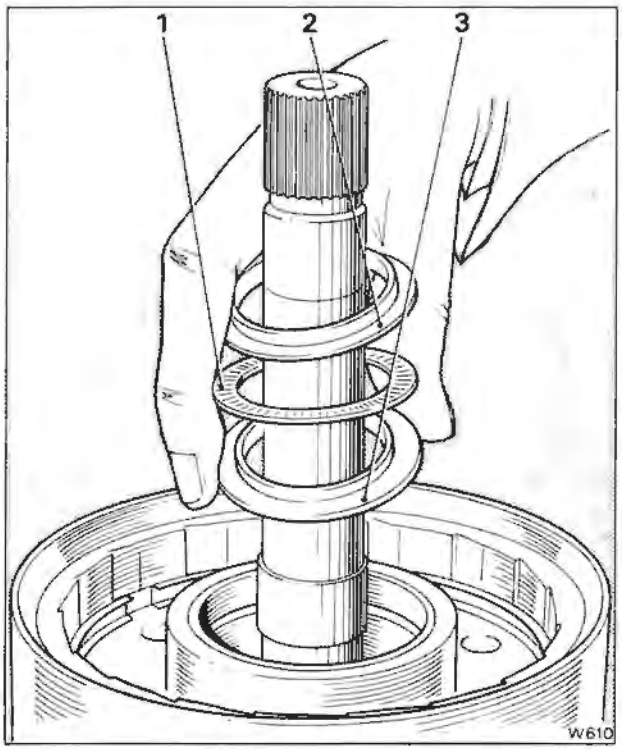

Fig. T121 Fitting the races and thrust bearing to the sun gear
1 Thrust bearing
2 I/D flanged race
3 I/D flanged race

18. Fit the sun gear shaft with the longest splined end first.
19. Ensure that the reaction carrier pinion gears are adequately lubricated, then fit the reaction carrier onto the output carrier as shown in Figure T120. Mesh the pinion gears with the front internal gear.
Note
When a new output carrier and/or reaction carrier is being installed and the front internal gear ring prevents assembly of the carriers, replace the front internal gear ring with the service ring.
20. Smear the centre support to sun gear thrust races and bearing with petroleum jelly and fit as follows (see Fig. T121).
(a) The large outer diameter race, with the centre flange up, over the sun gear shaft.
(b) The thrust bearing onto the large race.
(c) The small diameter race, with the centre flange up.
21. Smear the centre support to reaction carrier thrust washer with petroleum jelly, then fit the washer into the recess in the centre support.
22. Fit the rollers that may have come out of the roller clutch cage, by compressing the energising spring with the forefinger and inserting the roller from the outside (see Fig. T122).
Note
Ensure that the energising springs are not distorted and that the curved end leaf of the springs are positioned against the rollers.
23. Fit the spacer ring and roller clutch assembly into the reaction carrier.
24. Fit the centre support assembly into the roller clutch (see Fig. T123).
Note
With the reaction carrier held, the centre support should turn **anti-clockwise only.**

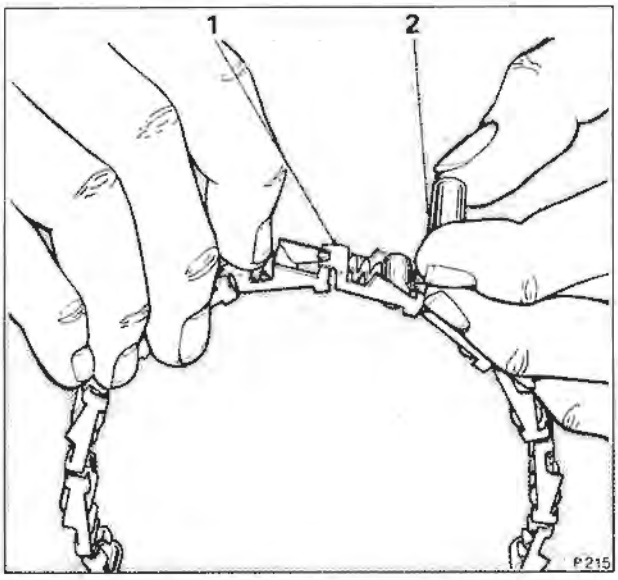

Fig. T122 Fitting a roller to the roller clutch cage
1 Roller clutch cage
2 Roller

Intermediate clutch gear unit, centre support and reaction carrier - To fit

1. Fit the rear band assembly into the transmission case so that the band lugs engage with the anchor pins (see Fig. T124).

2. Inspect the support to case spacer for burrs or raised edges. If necessary, remove the burrs etc. with a stone or fine emery cloth. Ensure that the spacer is clean.

3. Fit the support to case spacer against the shoulder at the bottom of the case splines and the gap adjacent to the band anchor pin.

Note

Do not confuse this spacer [1,02 mm. (0.040 in.) thick and with both sides flat] with either the centre support to case snap ring (one side bevelled) or the intermediate clutch backing plate to case snap ring [2,36 mm. (0.093 in.) thick with both sides flat].

4. Fit the previously selected rear unit adjusting washer (see Section T18) into the slots provided inside the rear of the transmission case. Retain the washer with a smear of petroleum jelly.

5. Fit the transmission case into the holding fixture (if it has been removed). Do not over-tighten the fixture side pivot pin as this will cause binding when the gear unit is fitted.

6. Fit the gear unit assembly into the case. Align the slots, then carefully guide the assembly into the case, making certain that the centre support bolt hole is properly aligned with the hole in the case. Ensure that the tangs on the output shaft to case thrust washer are positioned in the pockets.

7. Lubricate the centre support retaining snap ring with clean transmission fluid, then fit the snap ring into the transmission case with the bevelled side uppermost and the flat side against the centre support. Position the location gap adjacent to the front band anchor pin.

8. Fit the case to centre support bolt by placing the centre support locating tool (J-23093) into the case direct clutch passage, with the handle of the tool pointing to the right as viewed from the front of the transmission and parallel to the bell housing mounting face.

9. Apply pressure downward to the tool handle which will tend to rotate the centre support anti-clockwise as viewed from the front of the transmission.

10. While holding the centre support firmly anti-clockwise against the case splines, torque tighten the case to centre support bolt to the figures quoted in Chapter P, using a ⅜ in. U.N.C. 12 point thin wall, deep socket (see Fig. T125).

Note

When using the locating tool, take care not to create burrs on the case valve body mounting face.

11. Lubricate the three steel (two flat and one waved) and three composition intermediate clutch plates with clean transmission fluid, then fit the clutch plates. Commence with the waved steel plate, then fit alternate composition and flat steel plates (see Fig. T126).

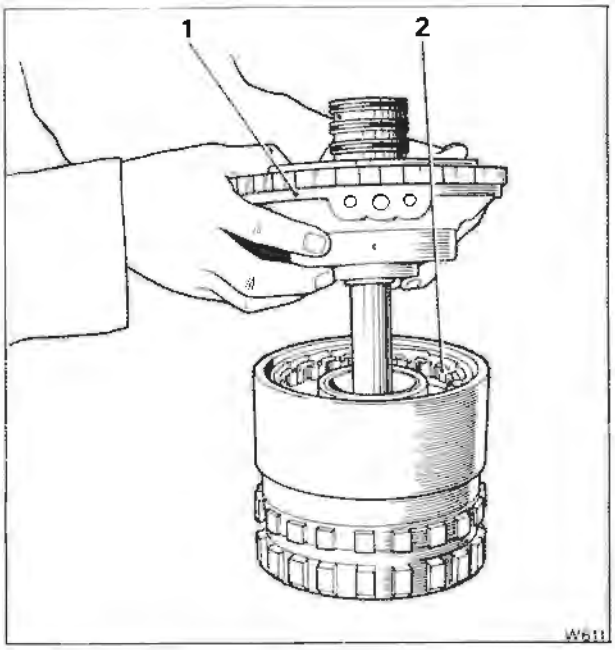

Fig. T123 Fitting the centre support into the reaction carrier (roller clutch)
1 Centre support
2 Roller clutch

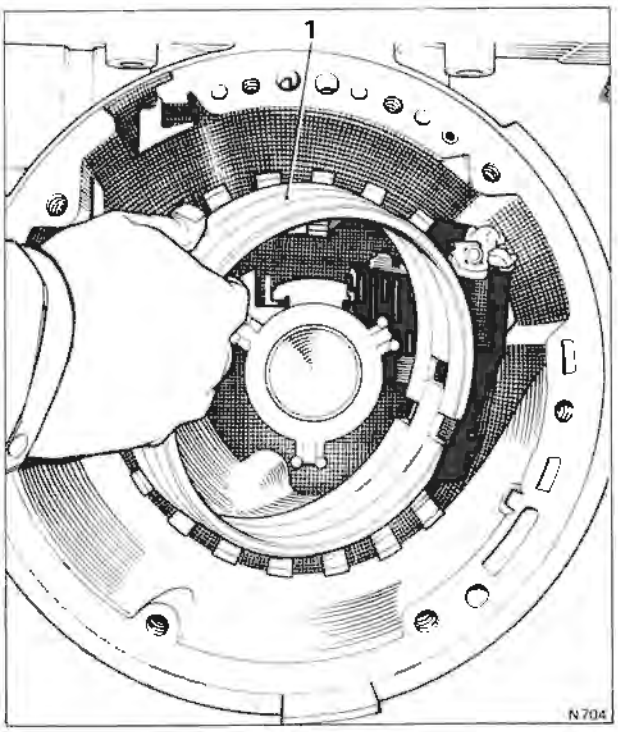

Fig. T124 Fitting the rear band
1 Rear band

12. Fit the intermediate clutch back plate with the ridge uppermost.

13. Fit the intermediate clutch backing plate to

Printed in England
© Rolls-Royce Motors Limited 1981
March 1981
TSD 4200

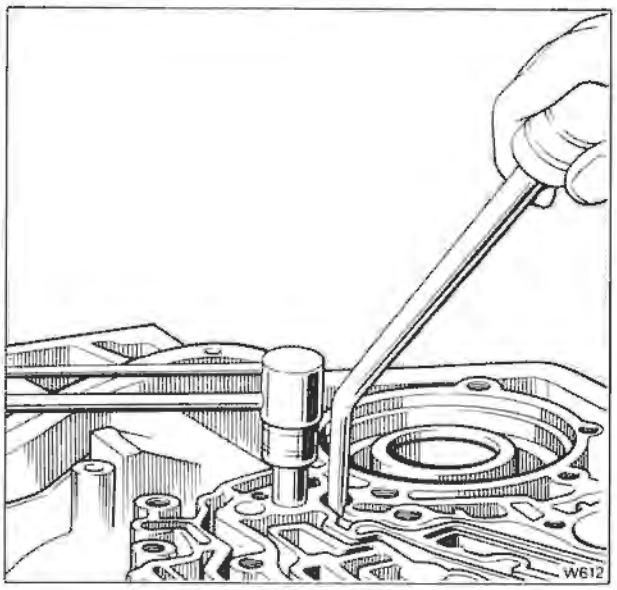

Fig. T125 Locating the centre support

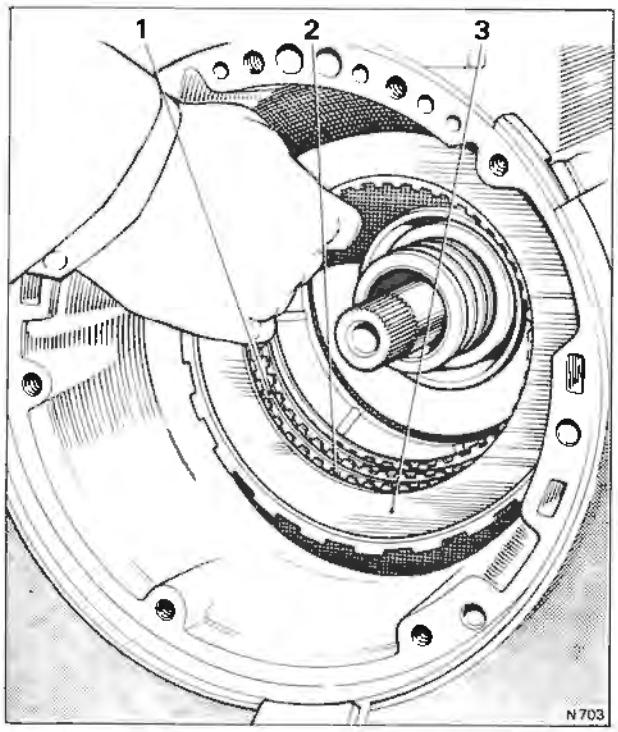

Fig. T126 Fitting the intermediate clutch plates
1 Steel plate
2 Composition plate
3 Back plate

case snap ring, ensuring that the ring gap is opposite the band anchor pin. Both sides of this snap ring are flat and it is 2,36 mm. (0.093 in.) thick.

14. Check the rear unit end-float (see Section T18).

Section T20

Transmission case

The transmission case is an alloy die casting which houses the main transmission components. It also forms the bell housing which encloses the torque converter.

The lower inner face of the case forms part of the hydraulic passages onto which the control valve unit is fitted. The oil pump is fitted to a machined face at the front of the case. This machined face contains oil passages which convey transmission fluid from the pump to various points in the case (see Fig. T127).

The bore in the rear of the case contains a bush in which the output shaft rotates.

Transmission case - To inspect

1. When the transmission has been completely dismantled, the case should be thoroughly washed in clean paraffin, then dried with compressed air.

2. Ensure that all the oil passages are flushed out.

3. Take care not to create burrs on the ends of the passages.

Note

If the case assembly requires replacement, ensure that the centre support to case spacer is removed from the old case and fitted in the new case.

4. Inspect the case assembly for cracks, internal porosity or cross channel leaks in the valve body face passages.

5. Check the retention of the band anchor pins.

6. Inspect all threaded holes for thread damage.

Note

Stripped threads in bolt holes are repairable with heli-coil inserts (see Fig. T129 and Heli-coil chart).

7. Inspect the intermediate clutch plate lugs for damage.

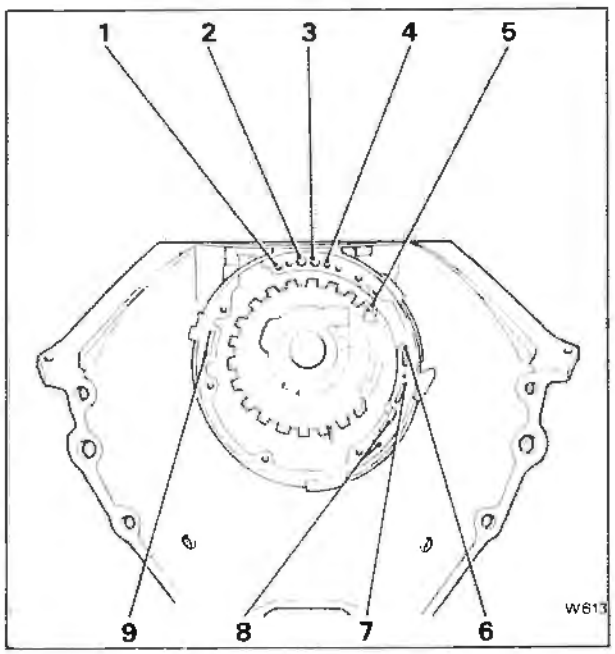

Fig. T127 Transmission case oil passages

1 Reverse
2 Line
3 Drive
4 Modulator
5 Intermediate clutch cup plug
6 To cooler
7 Cooler return
8 Vent
9 Pump intake

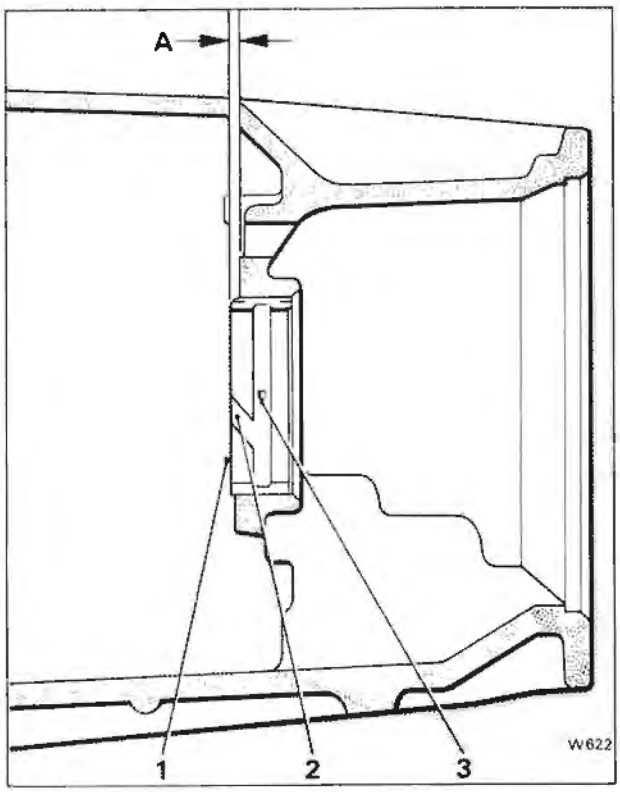

Fig. T128 Fitting a new case bush

1 Bush
2 Oil groove in direction shown
3 Stake mark
A 1,02 mm. to 1,40 mm. (0.040 in. to 0.055 in.)

Printed in England
© Rolls-Royce Motors Limited 1981
March 1981
TSD 4200

8. Inspect the snap ring grooves for damage.
9. Inspect the bore of the governor assembly for scratches or scoring.
10. Inspect the modulator valve bore for scoring or damage.
11. Inspect the intermediate clutch cup plug for retention and sealing. If necessary, fit a new plug.

External damage
External damage is usually caused by handling, road hazards or the converter to flex plate set-screws becoming loose as a result of incorrect fitting. Therefore, when external damage is evident as previously described, fit a new case.

Internal damage
If internal damage is due to the incorrect installation of the spacer and/or the snap rings resulting in damage to the snap ring grooves, fit a new case and ensure that the snap rings are assembled correctly.

High oil pressure (faults usually located in the pressure regulator valve system) can also result in internal damage, if this is the cause, fit a new case and rectify the problem.

If the case bushing is found to be worn or scored, fit new bushing (see Fig. T128).

Repair procedure for minor case porosity
1. Bring the transmission fluid up to the normal operating temperature approximately 82°C.(180°F).
2. Locate the source of the oil leak.
3. Thoroughly clean the area to be repaired with cleaning solvent and a brush; dry the area with compressed air. A clean, dry soldering acid brush may be used to clean the area and also to apply the epoxy cement.
4. Following the manufacturer's instructions, mix a sufficient amount of epoxy cement, such as 3M Scotch Weld 2216 or equivalent, to carry out the necessary repair.
Note
Observe the manufacturer's precautions in handling.
5. While the transmission is still at operating temperature, apply the epoxy cement to the area under repair. Ensure that the area is completely covered.
6. If 3M Scotch Weld 2216 has been used, allow 1

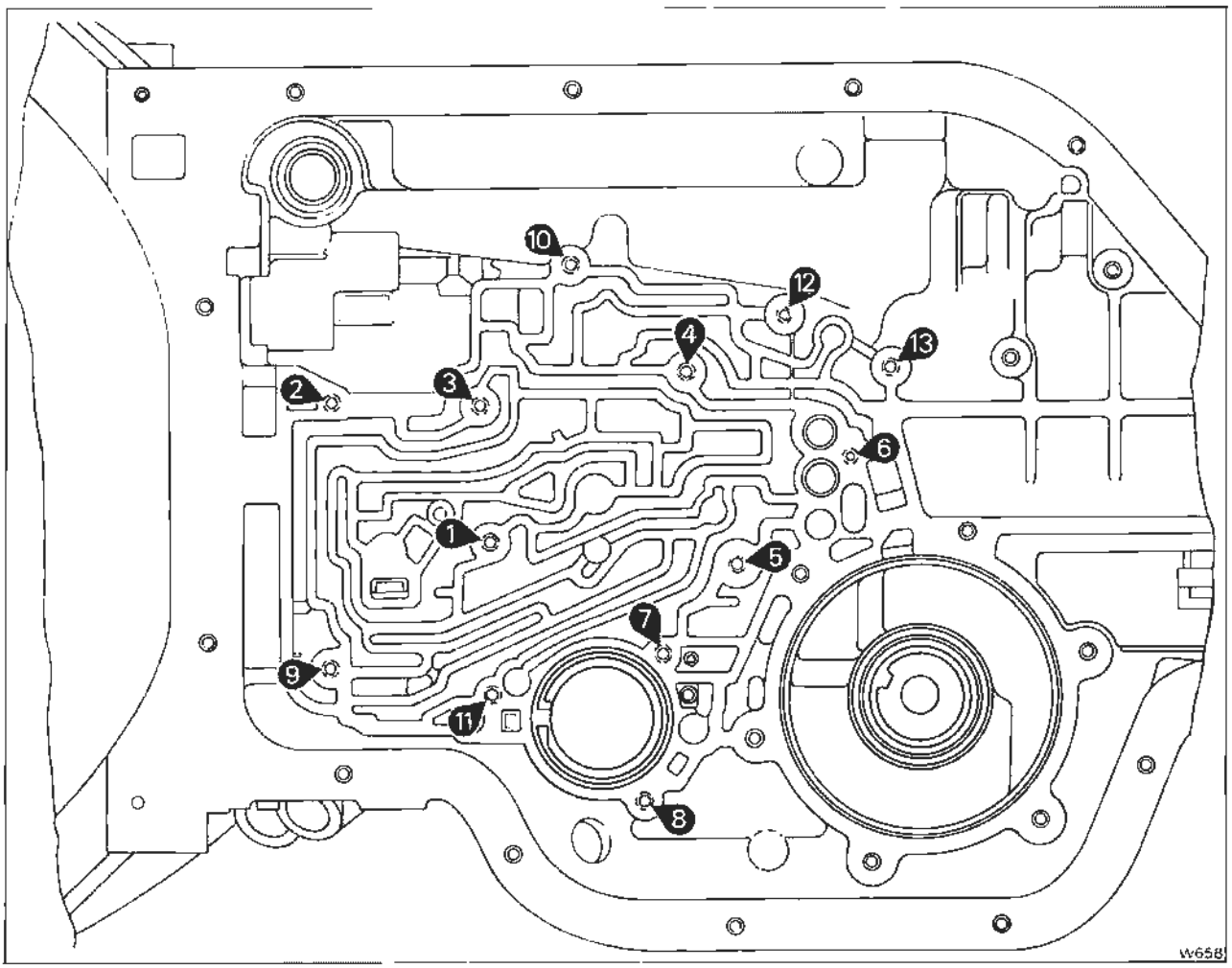

Fig. T129 Heli-coil identification - View of underside of transmission case

Heli-coil information for Torque Converter Transmission

Transmission out of car and partially or completely dismantled

Location	Hole number	Drill size	Tap size	Heli-coil size
Pump to case	All	8,33 mm. (0.328 in.)	5/16-18 UNC-2B	5/16-18 STI-NC
Valve body to case	1 to 4 (see Fig. T129)	8,33 mm. (0.328 in.)	5/16-18 UNC-2B	5/16-18 STI-NC
Valve body to case	5 and 6 (see Fig. T129)	6,76 mm. (0.266 in.)	1/4-20 UNC-2B	1/4-20 STI-NC
*Converter to flex plate	All	9,93 mm. (0.391 in.)	3/8-16 UNC-2B	3/8-16 STI-NC
*Converter to flex plate	All	10,30 mm. (0.406 in.)	M10-1.5	M10-1.5 x 1½D

Transmission in car and partially dismantled

Location	Hole number	Drill size	Tap size	Heli-coil size
Rear extension to case	All	9,93 mm. (0.391 in.)	3/8-16 UNC-2B	3/8-16 STI-NC
Governor cover to case	All	8,33 mm. (0.328 in.)	5/16-18 UNC-2B	5/16-18 STI-NC
Modulator retainer to case	-	8,33 mm. (0.328 in.)	5/16-18 UNC-2B	5/16-18 STI-NC
*Speedometer driven gear assembly to case	-	8,33 mm. (0.328 in.)	5/16-18 UNC-2B	5/16-18 STI-NC
*Speedometer driven gear assembly to case	-	6,20 mm. (0.244 in.)	M6-1.0	M6-1.0 x 2D
Oil sump to case	All	8,33 mm. (0.328 in.)	5/16-18 UNC-2B	5/16-18 STI-NC
Rear servo cover to case	All	8,33 mm. (0.328 in.)	5/16-18 UNC-2B	5/16-18 STI-NC
Parking lock bracket to case	All	8,33 mm. (0.328 in.)	5/16-18 UNC-2B	5/16-18 STI-NC
Valve body to case	7 to 10 (see Fig. T129)	8,33 mm. (0.328 in.)	5/16-18 UNC-2B	5/16-18 STI-NC
Valve body to case	11 (see Fig. T129)	6,76 mm. (0.266 in.)	1/4-20 UNC-2B	1/4-20 STI-NC
Solenoid to case	12 and 13 (see Fig. T129)	6,76 mm. (0.266 in.)	1/4-20 UNC-2B	1/4-20 STI-NC

***Change from UNC to Metric threads early 1979**

Printed in England
© Rolls-Royce Motors Limited 1981
March 1981
TSD 4200

hour to pass before starting the engine. Equivalent epoxy cements may take longer to cure, therefore, always check the manufacturer's instructions.
7. Finally, bring the transmission fluid up to the normal operating temperature of approximately 82°C. (180°F.) and check the transmission for leaks.

Intermediate clutch cup plug - To fit
1. Place the transmission case in the holding fixture and position it with the front end facing upwards.
2. Ensure that the intermediate clutch cup plug hole is thoroughly clean and enter the intermediate clutch cup plug into the hole, open end out. Drive the plug into the case until it is flush or slightly below the top of the hole using a 9,52 mm. (0.375 in.) diameter rod, approximately 254 mm. (10 in.) long.

Note
Ensure that the diameter of the rod is large enough to locate on the lip edge of the plug and not the bottom of the plug.

3. Stake the plug securely in the case.

Case bushing - To remove
1. Support the case in the holding fixture and thread the extension handle (J-21465-13) into the bushing removal tool (J-21465-8). Using drive handle (J-8092) remove the bush.

Case bushing - To fit
1. Support the transmission case and using adapter (J-21465-9) on removal/fitting tool (J-21465-8), together with the drive handle (J-8092) and extension (J-21465-13), press or drive the bush into the case until between 1,02 mm. and 1,40 mm. (0.040 in. and 0.055 in.) **above** the selective thrust washer face (see Fig. T128).

Note
Ensure that the bushing is fitted with the lubrication passage facing the front of the transmission case.

2. Stake the bushing in the oil groove using tool (J-21465-10).

Heli-coils
Note
Always refer to Figure T129 and the Heli-coil information chart, for the correct drill and tap sizes, before commencing any repair work.
1. Blank off the area around the hole to be heli-coiled (if possible), to contain any small particles of metal.
2. Drill out the old threads and clean any particles from the hole.

Note
Drill out only to the depth of the original hole. When drilling hole No.4 (see Fig. T129), the drill may go through to the inside of the case; located just behind this hole are the intermediate clutch splines. Therefore, the burrs **must** be removed from the clutch splines.

3. Tap the hole with the heli-coil tap.
4. Fit the standard insert (STI) heli-coil.
5. Remove any blanks etc. as described in Operation 1 and **ensure that all particles of metal, etc. are removed.**

Section T21

Fault diagnosis

Printed in England

Accurate diagnosis of transmission problems begins with a thorough understanding of normal transmission operation. In particular it is essential to know which units are involved in the various gears and speeds, so that the specific unit or fluid flow can be isolated and investigated further.

The following sequence of tests may help to simplify the diagnosis of defects and should be performed first.

1. Check the fluid level.
2. Warm up the engine and transmission.
3. Check the control linkage.
4. Check the kick-down micro-switch.
5. Check the vacuum lines and fittings.
6. Fit a pressure gauge and road test the car.

Note
If possible, test the car with the customer as a passenger. It is possible that the condition which the customer requires correcting is a normal function of the transmission, thus, unnecessary work can be avoided.

Symptom	Possible cause	Action
1. No drive in Drive range	**1.** Incorrect fluid level in transmission.	1. Top-up as necessary (see Section T2). Check for external leaks or the vacuum modulator diaphragm leaking.
	2. Control linkage.	2. Check and adjust the control linkage (see Section T17).
	3. Low oil pressure.	3. (a) Check for a restricted intake strainer, a leak at the intake pipe, grommet, or the 'O' ring damaged or missing. (b) Check that the oil pump assembly pressure regulator is not sticking. Also check the pump drive gear tang has not been damaged by the converter. (c) Check the case for porosity around the intake bore. (d) Check the items listed on Page T21-14.
	4. Control valve assembly.	4. Check for the manual valve being disconnected from the detent lever.
	5. Forward clutch.	5. (a) Check the forward clutch apply piston for cracks, the seals damaged or missing or the clutch plates burnt (see Page T21-15). (b) Check the oil seal rings (missing or broken) on the pump cover. (c) Check for a leak in the feed circuit or the pump to case gasket mis-positioned or damaged. (d) Check the clutch housing check ball is not sticking or missing.
	6. Roller clutch assembly.	6. Check the clutch assembly for broken springs or damaged cage.

© Rolls-Royce Motors Limited 1981

April 1981

TSD 4200

Symptom	Possible cause	Action
1. No drive in Drive range (continued)	**7.** Actuator inoperative.	**7.** (a) Check the thermal cut-out switch on the fuseboard. (b) Check the charge condition of the battery. (c) Check the operation of the actuator (see Section T5).
2. (a) No drive in Reverse range. **(b) Slips in Reverse range**	**1.** Incorrect fluid level in transmission.	**1.** Top-up as necessary (see Section T2).
	2. Actuator inoperative.	**2.** (a) Check the thermal cut-out switch on the fuseboard. (b) Check the charge condition of the battery. (c) Check the operation of the actuator (see Section T5).
	3. Control linkage.	**3.** Check and adjust the control linkage (see Section T17).
	4. Oil pressure.	**4.** Check the items listed on Pages T21-13/14.
	5. Control valve assembly.	**5.** (a) Check that the valve body/spacer plate gaskets are not damaged or incorrectly fitted. (b) Check that the 2-3 valve train is not sticking open (this would also cause a 1-3 up-change in Drive range). (c) Low/Reverse check ball missing from the case (this will also cause no overrun braking in Low range).
	6. Rear servo and accumulator.	**6.** (a) Check for a damaged rear piston seal. (b) Check for a short band apply pin (this may also cause no overrun braking or slipping in overrun braking - Low range).
	7. Forward clutch	**7.** Check that the clutch unit will release (if it does not release this will also cause drive in Neutral).
	8. Direct clutch.	**8.** (a) Check the outer seal for damage. (b) Check the clutch plates (if burnt, it may be caused by the check ball sticking in the piston) . (c) Check the items listed on Page T21-15.
	9. Rear band.	**9.** Check the band for burnt or loose linings, apply pin or anchor pins not engaged, or the band broken.
3. Drive in Neutral	**1.** Control linkage.	**1.** Check and adjust the control linkage (see Section T17).

Symptom	Possible cause	Action
3. Drive in Neutral (continued)	2. Forward clutch.	2. (a) Check that the clutch is releasing, if the clutch does not release it will also cause 'no Reverse'. (b) Check the items listed on Page T21-15.
	3. Pump assembly.	3. Transmission fluid pressure leaking into the forward clutch apply passage.
4. Will not hold in Park	1. Control linkage.	1. Check and adjust the control linkage (see Section T17).
	2. Internal parking linkage.	2. (a) Check the parking brake lever and actuator assembly. (b) Check the chamfer on the actuator rod sleeve. (c) Check the parking pawl (broken or inoperative). (d) Check that the parking pawl return spring is not broken, missing or incorrectly hooked.
5. No engine braking in Intermediate range - 1st gear	1. Control valve assembly	1. Check the Low-Reverse check ball (missing from case).
	2. Rear servo.	2. (a) Check for a damaged oil seal ring, bore or piston; leaking. (b) Rear band apply pin short or improperly assembled.
	3. Rear band.	3. (a) Rear band broken or burnt (check for cause). (b) Check the rear band assembly engages correctly on the anchor pins and/or servo pin.
6. No engine braking in Intermediate range - 2nd gear	1. Front servo and accumulator.	1. (a) Check for leaking or broken oil sealing rings. (b) Check for scored bores. (c) Check for a sticking servo piston.
	2. Front band.	2. (a) Check to ensure that the front band is not burnt or broken. (b) Check to ensure that the front band is engaged correctly on the anchor pin and/or servo pin.
7. No detent down-changes **Note** Position the car on a ramp. Switch on ignition, but do not start engine	1. Transmission case electrical plug.	1. (a) Disconnect the electrical connections. (b) Connect a test lamp to the detent solenoid terminal of the disconnected wiring loom. (c) Depress the accelerator 'fully', from the normal driving position.
	(d) Light **off**.	(d) Incorrectly adjusted or faulty micro-switch. Faulty electrical circuit.

Printed in England
© Rolls-Royce Motors Limited 1981

Symptom	Possible cause	Action
7. No detent down-changes (continued)	(e) Light **on.**	(e) Check the operation of the detent solenoid. If the solenoid cannot be heard to operate this may be due to. (i) Faulty electrical connection. (ii) Sticking detent valve train. (iii) Restricted oil passage.
	2. Control valve assembly.	**2.** (a) 3-2 valve sticking, spring missing or broken. (b) Detent valve train sticking.
8. Transmission noisy	**1.** Noise in Park, Neutral and all Drive ranges	**1.** (a) Check for pump cavitation. (i) Transmission fluid level low or high, top-up etc., as necessary (see Section T2). (ii) Restricted or incorrect strainer assembly. (iii) Intake 'O' ring damaged or intake pipe split. (iv) Porosity at pump face intake port. (v) Pump to transmission case gasket incorrectly fitted. (vi) Coolant in the transmission fluid. (b) Check pump assembly for. (i) Defective or damaged gears. (ii) Drive gear incorrectly assembled. (iii) Crescent interference. (iv) Seal rings damaged or worn. (c) Check converter for. (i) Damage. (ii) Loose bolts, converter to flywheel.
	2. Noise in First, Second and Reverse.	**2.** (a) Check that the transmission does not contact the body. (b) Check planetary gear train for. (i) Gears or thrust bearings damaged. Thoroughly clean thrust bearings and thrust races. Closely inspect needles and surfaces for pitting and roughness. (ii) Front internal gear ring damaged.
	3. Noise during acceleration in any gear.	**3.** (a) Check that the transmission fluid lines to and from the cooler are not fouling. (b) Check that the engine mounts are not loose or broken.
	4. Squeak at low vehicle speeds.	**4.** Check the speedometer driven gear shaft seal (lubricate or replace).

Symptom	Possible cause	Action
8. Transmission noisy (continued)	**5.** Slight creaking noise, when accelerating gently from the stationary position.	**5.** Check for the converter pilot spigot fretting in the crankshaft tail bore (lubricate the spigot liberally with Retinax 'A' grease).
	6. Clutch application during. (a) Neutral to Drive and/or Park to Drive. (b) 1-2 up-change in Intermediate and Drive ranges. (c) 2-3 up-change in Drive range, Neutral to Reverse and Park to Reverse.	**6.** (a) Check the condition of the forward clutch plates. (b) Check the condition of the intermediate clutch plates. (c) Check the condition of the direct clutch plates.
	7. Converter noise in Reverse, Drive, Intermediate and Low ranges. The noise level is generally lower in Park and Neutral.	**7.** Check for damaged needle bearings in the converter.
9. 1st and 2nd ranges only (no 2-3 up-change)	**1.** Incorrect vacuum.	**1.** Check the items listed on Page T21-14. (Incorrect vacuum at modulator).
	2. Governor system.	**2.** Check line pressure.
	3. Control valve assembly.	**3.** (a) Check for the 2-3 shift valve train sticking (valves should fall under their own weight). (b) Check for damaged, leaking or incorrectly fitted gaskets between the control valve unit, oil spacer plate and case.
	4. Direct clutch burnt.	**4.** (a) Check the modulator bellows. (b) Check the centre support for the oil seal rings missing or broken. (c) Check that the direct clutch piston seals are not missing, cut, or incorrectly assembled. (d) Check that the piston check ball is not sticking or missing.
	5. Kick-down micro-switch.	**5.** Check that the micro-switch is not sticking closed, causing the solenoid to be activated all the time.
	6. Detent solenoid.	**6.** Check that the solenoid is not sticking open.
10. (a) No 1-2 up-change. (b) Delayed up-change	**1.** Incorrect fluid level in transmission.	**1.** Top-up as necessary (see Section T2).

Printed in England

© Rolls-Royce Motors Limited 1981

Symptom	Possible cause	Action
10. (a) No 1-2 up-change. (b) Delayed up-change (continued)	**2.** Kick-down micro-switch.	**2.** Check that the micro-switch is not sticking closed, causing the solenoid to be activated all the time.
	3. Detent solenoid.	**3.** Check that the solenoid is not sticking open.
	4. Governor assembly.	**4.** (a) Check for the governor valve sticking. (b) Check that the driven gear is not loose, damaged or worn (also check the output shaft drive gear, if the driven gear shows damage). (c) Check that the driven gear securing pin is not loose, broken or missing.
	5. Control valve assembly.	**5.** (a) Check that the 1-2 shift valve train is not sticking closed. (b) Check that the governor feed channels are not blocked, leaking, or the pipes out of position. (c) Check that the valve body spacer plate geskets ere not leaking, damaged or incorrectly fitted.
	6. Case.	**6.** (a) Check for the intermediate clutch plug leaking or blown out. (b) Check for porosity between channels. (c) Check that the governor feed channel is not blocked, the governor bore scored or worn allowing a cross pressure leak.
	7. Intermediate clutch.	**7.** (a) Check that the clutch piston seals are not cut, improperly fitted or missing. (b) Check that the centre support oil rings are not missing or broken. (c) Check that the orifice cup plug is fitted.
11. Rough 1-2 up-change	**1.** Incorrect fluid level in transmission.	**1.** Top-up as necessary (see Section T2).
	2. Vacuum modulator	**2.** (a) Check for loose fittings, restrictions in line, or the modulator assembly inoperative. (b) Check that the modulator valve is not sticking.
	3 Oil pressure.	**3.** (a) Check that the oil pump regulator or boost valve has not jammed. (b) Check for the pump to case gasket being incorrectly fitted or damaged.
	4. Check condition of engine.	**4.** Tune the engine.

Symptom	Possible cause	Action
11. Rough 1-2 up-change (continued)	**5.** Control valve assembly.	**5.** (a) Check that the 1-2 accumulator valve train is not sticking. (b) Check that the valve body to case bolts are not loose. (c) Check that the valve body spacer plate gaskets are not damaged, incorrectly fitted or the wrong gasket fitted.
	6. Case	**6.** (a) Check the intermediate clutch ball (missing or not sealing). (b) Check for porosity between channels.
	7. Rear servo accumulator assembly.	**7.** (a) Check the oil seal rings for damage. (b) Check that the piston has not jammed. (c) Check that the spring is not broken or missing. (d) Check that the servo bore is not damaged.
	8. Intermediate clutch.	**8.** (a) Check that only one waved plate has been fitted. (b) Check that the clutch plates are not burnt.
12. Slipping 1-2 up-change	**1.** Incorrect fluid level in transmission.	**1.** Top-up as necessary (see Section T2).
	2. Check condition of engine.	**2.** Tune the engine.
	3. Vacuum line and components.	**3.** Check the vacuum system for response at the modulator.
	4. Line pressure.	**4.** (a) Check the oil pressure (it should vary and respond rapidly to quick changes in throttle openings). (b) Check the vacuum modulator for possible failure. (c) Check that the modulator valve is not sticking.
	5. Control valve assembly.	**5.** (a) Check for the 1-2 accumulator valve train sticking. (b) Check for porosity in the valve body or case. (c) Check the valve body attaching bolts for tightness.
	6. Front accumulator.	**6.** Check the oil seal ring (damaged or missing).
	7. Rear accumulator.	**7.** Check the oil seal ring (damaged or missing) or the case bore damaged.
	8. Oil pump.	**8.** (a) Check that the pump to case gasket is not mispositioned or damaged. (b) Check that the pressure regulator valve is not sticking.

Printed in England
© Rolls-Royce Motors Limited 1981

Symptom	Possible cause	Action
12. Slipping 1-2 up-change (continued)	**9.** Case.	**9.** (a) Check that the intermediate clutch plug is not leaking excessively. (b) Check for porosity between channels.
	10. Intermediate clutch.	**10.** (a) Check the piston seals (damaged or missing). Also check for burnt clutch plates. (b) Check the centre support for leaks in the feed circuit (oil rings or grooves damaged). Also, for an excessive leak between the tower and the bush, or the orifice bleed hole blocked. (c) Check that the centre support bolt has seated properly in the case. (d) Check that only one waved plate has been fitted.
13. Rough 2-3 up-change	**1.** Incorrect fluid level in transmission.	**1.** Top-up as necessary (see Section T2).
	2. Check condition of engine.	**2.** Tune the engine.
	3. Oil pressure - High.	**3.** (a) Check the vacuum modulator assembly. (b) Check that the modulator valve is not sticking. (c) Check that the oil pump regulator valve and boost valve are operating correctly.
	4. Front servo accumulator or assembly.	**4.** (a) Check that the accumulator spring is not missing or broken. (b) Check that the accumulator piston is not sticking.
	5. Direct clutch.	**5.** (a) Check that only one waved clutch plate has been fitted. (b) Check the direct clutch for leakage to the outer area of the clutch piston. (c) Check the centre support for damage.
14. Slipping 2-3 up-change	**1.** Incorrect fluid level in transmission.	**1.** Top-up as necessary (see Section T2).
	2. Check condition of engine.	**2.** Tune the engine.
	3. Oil pressure - Low.	**3.** (a) Check the vacuum modulator assembly. (b) Check the modulator valve. (c) Check the oil pump pressure regulator valve and/or the boost valve for operation. (d) Check the oil pump to case gasket for damage or incorrect location

Symptom	Possible cause	Action
14. Slipping 2-3 up-change (continued)	**4.** Control valve assembly.	**4.** (a) Check the front accumulator piston pin for a leak at the swaged end. (b) Check for sticking valves. (c) Check for damage or leaking oil passages. (d) Check the spacer plate for damage, blocked direct clutch feed orifice or mis-positioned gasket.
	5. Case.	**5.** Check the case for porosity cross leaks etc.
	6. Direct clutch.	**6.** (a) Check the piston seals and check ball for leaks. (b) Check the centre support oil seal rings for damage and for an excessive leak between the tower and bush. (c) Check that only one waved plate has been fitted.
	7. Front servo.	**7.** (a) Check for a broken or missing front servo spring. (b) Check for a leak at the servo pin.
15. (a) Delayed up-changes. (b) No up-changes	**1.** Incorrect fluid level in transmission.	**1.** Top-up as necessary (see Section T2).
	2. Detent system (kick-down) micro-switch.	**2.** Disconnect the white/green wire from the connector on the side of the transmission case. Test the up-changes (a) If the up-changes occur, the problem is in the micro-switch or wiring. (b) If the fault persists continue to Operation 3.
	3. Incorrect modulator vacuum.	**3.** Connect a gauge to the lower end of the modulator vacuum pipe and check for normal vacuum. (a) If the vacuum is low or not present, check for leaks and restrictions. (b) If the fault persists continue to Operation 4.
	4. Incorrect line pressure.	**4.** Connect a gauge to the transmission adapter and check the line pressure in Drive range with an engine speed of 1 000 r.p.m. Normal pressure is between 4,57 kgf/sq.cm. and 5,27 kgf/sq.cm. (65 lbf/sq.in. and 75 lbf/sq.in.). **Note** Normal line pressure in Drive range with the car stationary should vary from approximately 4,57 kgf/sq.cm. (65 lbf/sq.in.) at idle speed to 10,55 kgf/sq.cm. (150 lbf/sq.in.) at full throttle. The pressure increases as the engine vacuum decreases.

Printed in England
© Rolls-Royce Motors Limited 1981

Symptom	Possible cause	Action
15. (a) Delayed up-changes. (b) No up-changes (continued)	**5.** Line pressure between 6,68 kgf/sq.cm. and 7,73 kgf/sq.cm. (95 lbf/sq.in. and 110 lbf/sq.in.).	**5.** Check the complete detent system.
	6. Line pressure between 9,49 kgf/sq.cm. and 10,55 kgf/sq.cm. (135 lbf/sq.in. and 150 lbf/sq.in.).	**6.** With the correct vacuum at the modulator, check. (a) Modulator valve. (b) Pressure regulator components.
	7. Normal line pressure between 4,57 kgf/sq.cm. and 5,27 kgf/sq.cm. (65 lbf/sq.in. and 75 lbf/sq.in.).	**7.** Remove the governor assembly; check for freedom of operation and presence of dirt etc. Clean if necessary.
	8. Detent system.	**8.** (a) Check that the detent solenoid is not loose or defective. (b) Check that the solenoid feed orifice is not blocked. An incorrectly fitted gasket could block the hole. (c) Check that the detent valve spacer pin has been fitted. (d) Check that the detent valve bore plug has not been pushed too far and tilted. The plug should be seated against the retaining pin. (e) Check that the detent valve bore plug is not undersize or eccentric, causing an excessive leak at the detent valve.
16. 1-2 Up-change - Full throttle only	**1.** Kick-down micro-switch.	**1.** Check that the micro-switch is not sticking.
	2. Detent solenoid.	**2.** (a) Check that the solenoid securing bolts are torque tightened. (b) Check that the gasket (if fitted) is not leaking. (c) Check that the solenoid is not sticking open.
	3. Control valve assembly.	**3.** (a) Check the valve body spacer plate gasket for. (i) Leaks (ii) Damage (iii) Incorrectly fitted. (b) Check that the detent valve train has not jammed. (c) Check that the 3-2 valve has not jammed.
	4. Case.	**4.** Check the case for porosity.

Symptom	Possible cause	Action
17. Slips in all ranges	**1.** Incorrect fluid level in transmission.	**1.** Top-up as necessary (see Section T2).
	2. Oil pressure.	**2.** (a) Check that the vacuum modulator valve is not sticking. (b) Check that the oil strainer assembly is not blocked or leaking, or the grommet or 'O' ring missing or damaged. (c) Check the oil pump assembly for the regulator or boost valve sticking, or for a cross leak. (d) Check that the oil pump to case gasket is not damaged or incorrectly fitted.
	3. Case.	**3.** Check the case for cross leaks or porosity.
	4. Forward and direct clutches slipping.	**4.** (a) If the clutches appear burnt, look for the cause in 'Burnt clutch plates' on Page T21-15. (b) Check the oil pump sealing rings on the pump cover for wear or damage.
18. No part throttle down-changes	**1.** Oil pressure.	**1.** Check the vacuum modulator assembly, modulator valve, and pressure regulator valve etc., for leaks, sticking valves and restrictions.
	2. Control valve assembly.	**2.** Check that the 3-2 valve is not sticking, or the spring missing or broken.
19. Low or High up-changes	**1.** Oil pressure.	**1.** (a) Check the engine vacuum at the transmission end of the modulator pipe. (b) Check for loose vacuum connections at the engine and transmission. Also, check the modulator valve, pressure regulator valve train etc., for leaks, sticking valves and restrictions.
	2. Governor.	**2.** (a) Check that the governor valve is not sticking. (b) Check the feed holes, lines etc., for leaks or restrictions, or the pipes damaged or mispositioned.
	3. Detent solenoid.	**3.** Check that the solenoid is not sticking open, or become loose etc., as this will cause late up-changes.
	4. Control valve assembly.	**4.** (a) Check the detent valve train for free movement or restrictions. (b) Check the 3-2 valve train.

Printed in England
© Rolls-Royce Motors Limited 1981

Symptom	Possible cause	Action
19. Low or High up-changes (continued)		(c) Check the 1-2 valve train, if the 1-2 regulator valve is sticking this would cause a constant 1-2 shift point, regardless of throttle opening. (d) Check that the valve body spacer plate gaskets are not mispositioned, or the spacer plate holes missing or blocked.
	5. Case.	**5.** Check the case for porosity, intermediate plug leaking or missing.
20. Torque converter leaks	**1.** Converter welding.	**1.** Check the converter welding and if at all suspect, fit a new converter.
	2. Damaged or worn converter hub.	**2.** Inspect the converter hub for wear, also, scoring that can damage the seal.
21. Torque converter vibrations	**1.** Converter/flex -plate out of balance.	**1.** (a) Isolate the cause of the vibration. (b) Alter the position of the converter on the flexplate 120° at a time until the out of balance condition is corrected.
	2. Converter balance weight.	**2.** Check the converter for the loss of balance weight(s), change the converter if a balance weight is lost.
	3. Crankshaft pilot.	**3.** (a) Check to ensure that the converter to crankshaft pilot is not broken. (b) Change the converter if the pilot is broken.
22. Torque converter slipping or noisy. (Most converter noise occurs under light throttle in Drive range with the brakes applied)	**1.** Loose flexplate to converter set-screws.	**1.** (a) Check the flexplate and converter for damage. (b) If **no damage** is apparent, tighten the bolts. (c) **If damage** is apparent replace the components.
	2. Cracked flexplate.	**2.** (a) Check for a cracked flexplate (engine to case dowel pins missing can result in a cracked flexplate). (b) Replace the damaged components.
	3. Items listed under Operation 21 - Torque converter vibrations.	**3.** See items listed under Operation 21 - Torque converter vibrations.
	4. 'Fretting' of the converter pilot spigot in the crankshaft tail bore.	**4.** Apply a liberal coating of Shell Retinax 'A' grease all over the spigot.

Symptom	Possible cause	Action
22. Torque converter slipping or noisy (continued)	**5.** Converter balance weights lifting (spot welds breaking and one end lifting up and catching on the case).	**5.** (a) Check for welds breaking on the balance weights. (b) Change the converter if the balance weights have broken away.
	6. Internal damage to converter.	**6.** (a) Check the thrust roller bearing, thrust races and roller clutch for damage. Fit a new converter if damage is apparent.
	7. Converter fluid.	**7.** (a) Check the colour of the fluid, if it has the appearance of 'aluminium paint', the converter is damaged internally. (b) Check that anti-freeze has not contaminated the converter fluid. (c) Fit a new converter.
	Note It is not necessary to change the converter if a failure in some other part of the transmission has resulted in the converter containing dark discoloured fluid. The full flow strainer used in the transmission will remove all harmful residue from failures (other than converter to pump failures) before the oil is pumped into the converter.	Correct the transmission problem, then, change the intake strainer and fluid.

High line pressure

If either the idle or full throttle pressure check is high, the cause may be as follows.

1. Vacuum leak
(a) Full leak (vacuum line disconnected).
(b) Partial leak in the line from the engine to the modulator.
(c) Incorrect engine vacuum.
(d) Leak in vacuum operated accessories.

2. Damaged Modulator
(a) Sticking valve.
(b) Water in modulator.
(c) Incorrect operation of modulator.

3. Detent system
(a) Kick-down switch actuated (plunger sticking) or shorted.
(b) Detent wiring shorted.
(c) Detent solenoid sticking open.
(d) Detent feed orifice in spacer plate blocked.
(e) Detent solenoid loose.
(f) Detent valve bore plug damaged.
(g) Detent regulator valve pin short.

4. Pump
(a) Pressure regulator and/or boost valve sticking.
(b) Incorrect pressure regulator spring.
(c) Excessive number of pressure regulator valve spacers.

Printed in England
© Rolls-Royce Motors Limited 1981

(d) Faulty pump casting.
(e) Pressure boost valve installed incorrectly or otherwise defective.
(f) Aluminium bore plug defective.
(g) Pressure boost bush defective.

5. Control valve assembly
(a) Spacer plate-to-case gasket incorrectly fitted.
(b) Incorrect plate-to-case gasket.

Low line pressure

If either the idle or full throttle pressure checks are low, the cause may be as follows.

1. Transmission oil level low

2. Modulator assembly

3. Intake strainer
(a) Blocked or restricted.
(b) 'O' ring on intake pipe omitted or damaged.
(c) Incorrect strainer fitted.

4. Split or leaking intake pipe

5. Pump
(a) Pressure regulator or boost valve sticking.
(b) Gear clearance,damaged or worn (pump will become damaged if the drive gear is installed the wrong way or if the converter pilot does not enter the crankshaft freely).
(c) Pressure regulator spring weak.
(d) Insufficient spacers in pressure regulator.
(e) Pump to case gasket incorrectly positioned.
(f) Defective pump body and/or cover.

6. Leaks in the internal circuit
(a) Forward clutch leak (pressure normal in Neutral and Reverse - pressure low in Drive).
  (i) Check pump rings.
  (ii) Check forward clutch seals.
(b) Direct clutch leak (pressure normal in Neutral, Low, Intermediate and Drive - pressure low in Reverse).
  (i) Check centre support oil seal rings.
  (ii) Check direct clutch outer seal for damage.
  (iii) Check rear servo and front accumulator pistons and rings for damage or missing.

7. Case assembly
(a) Porosity in intake bore area.
(b) Check case for intermediate clutch plug leak or blown out.
(c) Low - Reverse check ball incorrectly positioned or missing (this condition will cause no Reverse and no overrun braking in Low range).

Note
When checking item 3 - Intake strainer, it should be noted that there is no approved method for either checking or cleaning the strainer. If the performance of the strainer is suspect **a new strainer must be fitted.**

Incorrect vacuum at modulator

1. Engine
(a) Requires tune-up.
(b) Loose vacuum fittings.
(c) Vacuum operated accessory leak.

2. Vacuum line to modulator
(a) Leak.
(b) Loose fitting.
(c) Restricted orifice, or incorrect orifice size.
(d) Carbon build-up at modulator vacuum fitting.
(e) Pinched line.
(f) Grease or varnish material in pipe (no or delayed upchange - cold).

Oil leaks

1. Transmission oil sump leaks
(a) Securing bolts not correctly torque tightened.
(b) Improperly installed or damaged sump gasket.
(c) Oil sump gasket mounting face not flat.

2. Case extension leak
(a) Securing bolts not correctly torque tightened.
(b) Rear seal assembly damaged or incorrectly installed.
(c) Gasket (extension to case) damaged or incorrectly installed.
(d) Porous casting.

3. Case leak
(a) Modulator assembly 'O' ring damaged or incorrectly installed.
(b) Electrical connector 'O' ring damaged or incorrectly installed.
(c) Governor cover, gasket and bolts damaged or loose; case face leak.
(d) Damage or porosity. Leak at speedometer driven gear housing or seal.
(e) Manual shaft seal damaged or incorrectly installed.
(f) Line pressure tap plug stripped.
(g) Vent pipe (refer to item 5).
(h) Porous case or crack at pressure plug boss.

4. Front end leak
(a) Front seal damaged (check converter neck for score marks etc., also for pump bushing moved forward), garter spring missing.
(b) Pump securing bolts and seals damaged; bolts missing or loose.
(c) Converter (leak in weld).
(d) Pump 'O' ring seal damaged. (Also check pump oil ring groove and case bore).
(e) Porous casting (pump or case).
(f) Pump drain back hole not open.

5. Oil comes out of vent pipe
(a) Transmission over-filled.
(b) Water in oil.
(c) Strainer 'O' ring damaged or incorrectly assembled causing oil to foam.

(d) Foreign material between pump and case or between pump cover and body.
(e) Case porous, pump face incorrectly machined.
(f) Pump porous.
(g) Pump to case gasket mispositioned.
(h) Pump breather hole blocked or missing.
(i) Hole in intake pipe.
(j) Check ball in forward clutch missing or sticking.

6. Modulator assembly
(a) Diaphragm defective.

Control valve assembly - Governor line pressure check

1. Install a line pressure gauge.
2. Install a tachometer.
3. Disconnect the vacuum line to the modulator.
4. With the car on a ramp (rear wheels off the ground), foot off the brake, in Drive, check line pressure at 1 000 r.p.m.
5. Slowly increase the engine revolutions to 3 000 r.p.m. and determine if a line drop occurs of 0,49 kgf/sq.cm. (7 lbf/sq.in.) or more.
6. If a pressure drop occurs, dismantle, clean and inspect the control valve assembly.
7. If no pressure drop occurs:
(a) Inspect the governor.
  (i) Sticking valve.
  (ii) Weight freeness.
  (iii) Restricted orifice in governor valve.
(b) Governor feed system.
  (i) Check screen in governor feed pipe hole in case assembly.
  (ii) Check for restrictions in governor pipe.

Burnt clutch plates

Note
Burnt clutch plates can be caused by incorrect usage of clutch plates. Also, anti-freeze in transmission fluid can cause severe damage, such as large pieces of composition clutch plate material peeling off.

1. Forward clutch
(a) Check the ball in the clutch housing for damage, sticking, or missing.
(b) Clutch piston cracked, seals damaged or missing.
(c) Low line pressure.
(d) Manual valve mispositioned.
(e) Restricted oil feed to forward clutch. (Clutch housing to inner and outer areas not drilled, restricted or porosity in pump).
(f) Pump cover oil seal rings missing, broken or undersize; ring groove oversize.
(g) Case valve body face not flat or porosity between channels.
(h) Manual valve bent and centre land not ground properly.

2. Intermediate clutch
(a) Rear accumulator piston oil ring, damaged or missing.
(b) 1-2 accumulator valve sticking in control valve assembly.
(c) Intermediate clutch piston seals damaged or missing.
(d) Centre support bolt loose.
(e) Low line pressure.
(f) Intermediate clutch plug in case missing.
(g) Case valve body face not flat or porosity between channels.
(h) Manual valve bent and centre land not ground properly.

3. Direct clutch
(a) Restricted orifice in vacuum line to modulator (poor vacuum response).
(b) Check ball in direct clutch piston damaged, sticking, or missing.
(c) Defective modulator bellows.
(d) Centre support bolt loose (bolt may be tight in support but not holding support tight to case).
(e) Centre support oil rings or grooves damaged or missing.
(f) Clutch piston seals damaged or missing.
(g) Front and rear servo pistons and seals damaged.
(h) Manual valve bent and centre land not cleaned up.
(i) Case valve body face not flat or porosity between channels.
(j) Intermediate roller clutch installed backwards.
(k) 3-2 valve, 3-2 spring or 3-2 spacer pin installed in wrong location in 3-2 valve bore.

Note
If direct clutch plates and front band are burnt, check manual linkage.

Vacuum modulator assembly

The following procedure is recommended for checking modulator assemblies in service before replacement is undertaken.

1. Vacuum diaphragm leak check
Check with a vacuum pump or insert a pipe cleaner into the vacuum connector pipe as far as possible and check for the presence of transmission oil. If oil is found, replace the modulator.

Note
Petrol or water vapour may settle in the vacuum side of the modulator. If this is found **without** the presence of oil, the modulator should **not** be changed.

2. Atmospheric leak check
Apply a liberal coating of soap bubble solution to the vacuum connector pipe seam and the crimped upper to lower housing seam. Using a short piece of rubber tubing, apply air pressure to the vacuum pipe by blowing into the tube and observe for leak bubbles. If bubbles appear, replace the modulator.

Note
Do not use any method other than human lung power

Printed in England
© Rolls-Royce Motors Limited 1981
April 1981
TSD 4200

to apply air pressure, as pressures over 0,42 kgf/sq.cm.(6 lbf/sq.in.) may damage the modulator.

3. Bellows comparison check
Make a comparison gauge (see Fig. T130), and compare the load of a known good modulator with the assembly in question.
(a) Install the modulator that is known to be acceptable on either end of the gauge.
(b) Install the modulator in question on the opposite end of the gauge.
(c) Holding the modulators in a horizontal position, bring them together under pressure until either modulator sleeve end just touches the line in the centre of the gauge. The gap between the opposite modulator sleeve end and the gauge line should then be 1,59 mm. (0.0625 in.) or less. If the distance is greater than this amount the modulator in question should be replaced.

4. Sleeve alignment check
Roll the main body of the modulator on a surface and observe the sleeve for concentricity to the body. If the sleeve is concentric and the plunger is free, the modulator is acceptable. Once the modulator assembly passes all of the above tests, it is an acceptable part and should be fitted again.

Detent (down-change) solenoid circuit - To check

Note
Before checking the detent solenoid circuit, make certain that the transmission kick-down switch is properly adjusted as described in Operation 5.

1. With the transmission gear range selector lever in Park, turn the ignition switch to the 'ON' position but **do not start the engine.** Leave the ignition switch 'ON' throughout the checking procedure.

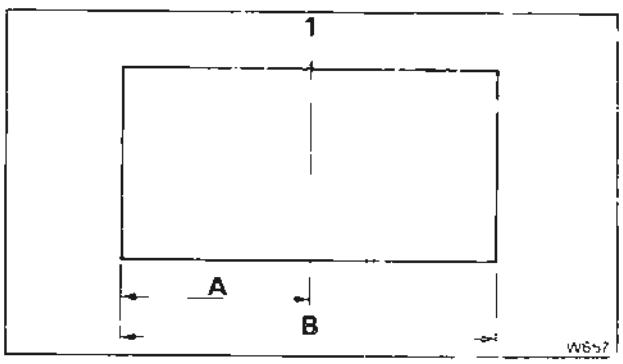

Fig. T130 Comparison gauge
1 Scribed centre line
A 12,70 mm. (0.50 in.)
B 25,40 mm. (1.0 in.)
Note
Round bar between 9,52 mm. and 10,32 mm. (0.375 in. and 0.406 in.) diameter.
Ends to be square within 0,39 mm. (0.015 in.).

2. Working under the car, slowly advance the throttle position. One click should be heard from the transmission.
3. Allow the throttle to return to the closed position. One click should be heard from the transmission.
4. If the system performed as described above, the detent circuit is operating properly. If the system does not perform as described above, proceed to Operation 5.
5. Disconnect the white/green cable from the detent solenoid terminal on the side of the transmission case, connect a test lamp into the circuit between the white/green cable and the terminal on the side of the transmission case.Ensure that the test lamp bulb illuminates when the throttle linkage is in the full throttle position, operated from the normal driving position. The bulb should be extinguished when the throttle is released.
(a) If the system operates as described above, but did not perform properly during Operations 1-3, replace the solenoid after first checking to see that the internal wiring is operational.
(b) If the test lamp bulb fails to illuminate with the throttle in the wide open position, the circuit is open, proceed to Operation 6.
(c) If the test lamp bulb illuminates,with the throttle closed, the circuit is shorted, proceed to Operation 9.

6. Remove the white/green cable from the transmission kick-down switch. Connect the test lamp between the switch terminal and a good earth; at full throttle ensure that the bulb of the test lamp illuminates.
(a) If the test lamp bulb illuminates, reconnect the white/green cable to the switch. Re-check the system.
(b) If the test lamp fails to illuminate, proceed to Operation 7.

7. Check the white feed cable at the transmission kick-down switch, with the test lamp connected between the white cable and a good earth.
(a) If the test lamp bulb illuminates, replace the transmission kick-down switch. Re-check the system.
(b) If the test lamp fails to illuminate, proceed to Operation 8.

8. Check the transmission thermal cut-out on the fuseboard.
(a) If it is necessary to reset or replace the cut-out, re-check the system.
(b) If the cut-out is correct it will be necessary to locate the fault in the wiring. Test for circuit continuity from the white feed cable at the kick-down switch to fuse No.2 at the fuseboard.

9. Remove the white/green cable at the transmission kick-down switch. Connect the test lamp between the exposed terminal at the switch and a good earth, with the throttles closed.
(a) If the test lamp bulb does not illuminate the system is correct.

(b) If the test lamp bulb illuminates, proceed to Operation 10.

10. With the throttle in the closed position, connect the test lamp between the white feed cable at the transmission kick-down switch and a good earth.

(a) If the test lamp bulb illuminates, replace the transmission kick-down switch. Re-check the system.

(b) If the test lamp bulb fails to illuminate, it will be necessary to locate the short in the wiring. Test the circuit between the white feed cable from the kick-down switch and fuse No. 2 at the fuseboard.

Printed in England
© Rolls-Royce Motors Limited 1981

Section T22

Workshop tools

Workshop tools with either R or RH prefix letters are obtainable from the Parts Distribution Centre at Crewe. However, certain other tools prefixed with the letter 'J' may be obtained from the Kent-Moore or General Motors Organisation.

Tool Number	Description
R 5244	Oil pressure gauge
R 5280	Adapter - air checking
RH 7674	Circlip and snap ring pliers
RH 7794 (J-8092)	Universal handle - case bush
RH 7914	Adapter - oil pressure tapping
RH 7952 (J-21366)	Retaining clamp - converter
RH 7953 (J-21359)	Insertion tool - oil pump and rear extension housing oil seals
RH 7955 (J-8763)	Holding fixture - transmission
RH 7956 (J-3289-20)	Base - holding fixture (used with RH 7955)
(J-2590)	Spring compressor - forward and direct clutches
(J-7004)	Slide hammers
(J-9578)	Removal tool - steel speedometer gear (used with J-21427)
(J-21362)	Inner seal protector - forward and direct clutches
(J-21363)	Inner seal protector - intermediate clutch
(J-21368)	Alignment band - oil pump body and cover
(J-21370-5)	Selector pin - rear servo (used with J-21370-6)
(J-21370-6)	Band apply pin selector gauge - rear servo (used with J-21370-5)
(J-21409)	Outer seal protector - forward and direct clutches
(J-21427)	Removal tool - steel speedometer gear (used with J-9578)
(J-21465-8)	Removal tool - case bush [used with J-21465-13 and RH 7794 (J-8092)]
(J-21465-9)	Adapter - fitting case bush (used with J-21465-8 and J-21465-13)
(J-21465-10)	Staking tool - case bushing
(J-21465-13)	Extension - case bushing
(J-21795)	Removal tool - gear unit assembly
(J-21885)	Fitting and removal tool - control valve accumulator piston
(J-23093)	Locating tool centre support to case

Printed in England
© Rolls-Royce Motors Limited 1981

S 263

Printed in England

© Rolls-Royce Motors Limited 1977

January 197

T.S.D. 4200

Chapter U

Emission control systems

Applicable to 1977 model year cars destined for Australia

Section

U1 Introduction
U2 Exhaust emission control system
U3 Fuel evaporation emission control system
U4 Crankcase emission control system
U5 Carburetters and Automatic choke system
U6 Ignition system
U7 Electrical components
U8 Fault diagnosis
U9 Workshop tools
U10 Running changes

Chapter U - 1977 Australia

Issue record sheet 1

November 1979

The dates quoted below refer to the issue date of individual pages within this chapter.

Section	U1	U2	U3	U4	U5	U6	U7	U8	U9	U10		
Page No.												
1	Jan 77	Jan 77	Jan 77	Jan 77	Jan 77	Nov 79	Jan 77	Jan 77	Jan 77	Jan 77		
2	Jan 77	Jan 77	Jan 77	Jan 77	Jan 77	Nov 79	Jan 77	Jan 77				
3	Jan 77	Dec 77	Jan 77		Jan 77		Jan 77	Jan 77				
4	Jan 77	Dec 77	Jan 77		Jan 77		Jan 77					
5		Nov 79	Jan 77		Jan 77							
6		Nov 79	Jan 77		Jan 77							
7		Jan 77	Jan 77		Jan 77							
8			Jan 77		Jan 77							
9			Jan 77		Jan 77							
10			Jan 77		Jan 77							
11					Jan 77							
12					Jan 77							
13					Jan 77							
14												
15												
16												
17												
18												
19												
20												
21												
22												
23												
24												
25												
26												
27												
28												
29												
30												
31												
32												
33												
34												
35												
36												
37												
38												
39												
40												
41												
42												
43												
44												
45												
46												
47												
48												

Printed in England
© Rolls-Royce Motors Limited 1979

T.S.D. 4200
(Australia 1977 Model year)

Section U1

Introduction

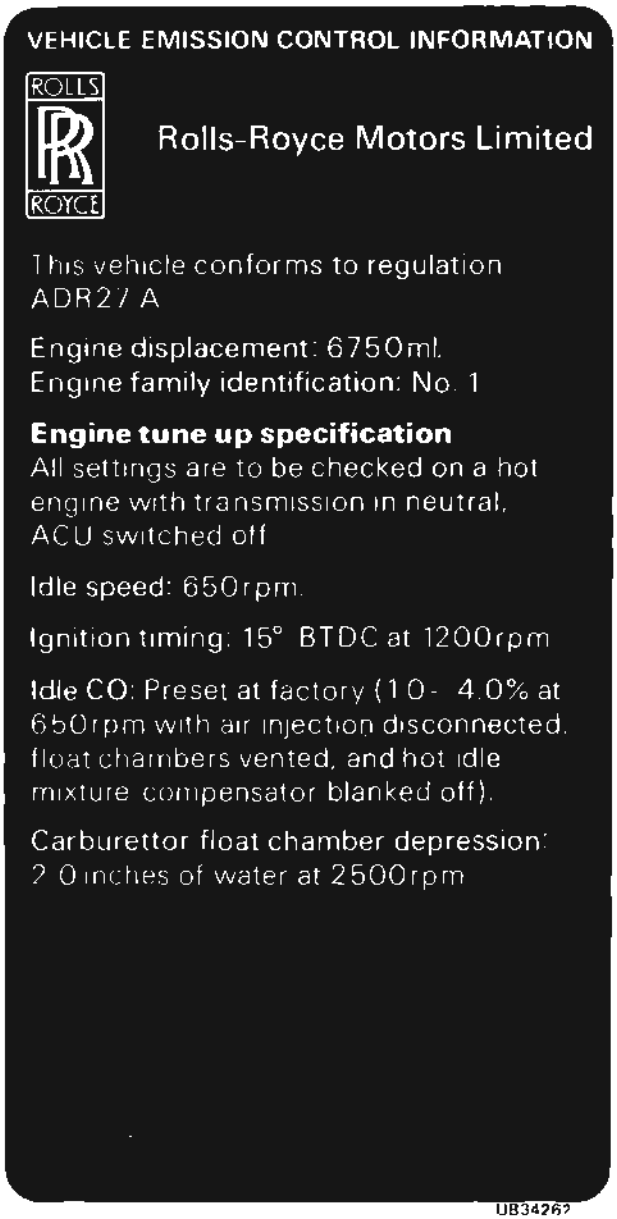

Fig. U1 Emission control certification label

This Chapter has been written specifically for cars fitted with Emission Control Systems conforming to the Australian emission control regulations, applicable to 1977 model year new motor vehicles.

It is important therefore that Service Personnel fully understand the contents of this Chapter so that the special servicing can be correctly carried out.

Rolls-Royce and Bentley motor cars conforming to the above regulations and produced to the 1977 model year specification can be readily identified as follows.

1. **Emission Control Certification Label**
A 1977 Emission Control Certification Label (illustrated) located on the wing valance to the rear of the right-hand front suspension spring cover.

Engine compartment
Figures U2 and U3 overleaf show the location of the major emission control system components within the engine compartment.

Hose routing diagram
Figure U4 within the Introduction section gives details of the various hose 'runs' and connections in and around the engine compartment, that are associated with the emission control systems components.

Torque tightening
When fitting the various emission control systems components, ensure that the securing nuts and set-screws are tightened to the torque figures given in Chapter P, unless otherwise stated in this Chapter.

Printed in England
© Rolls-Royce Motors Limited 1977

January 1977
T.S.D. 4200 (Australia)

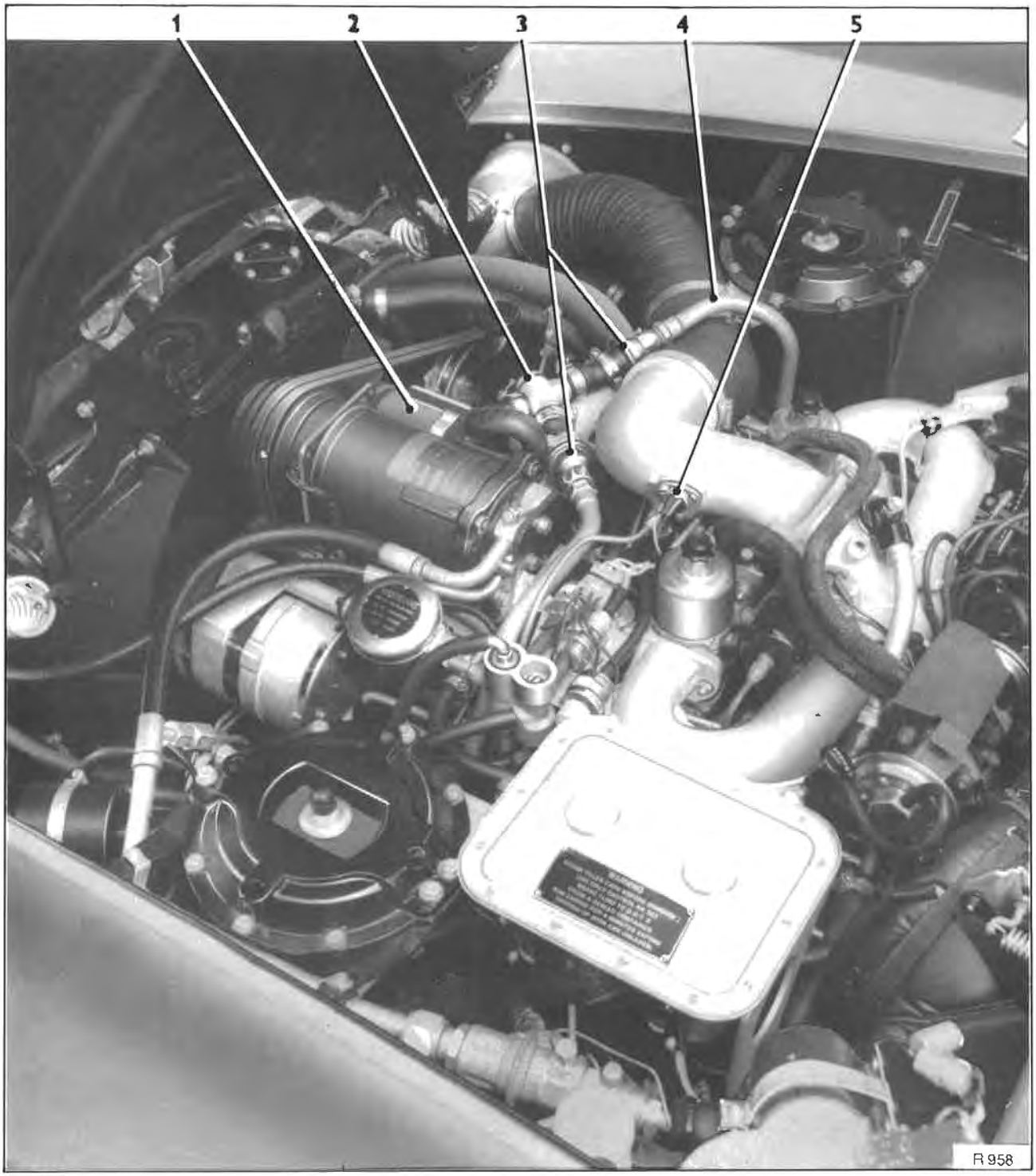

Fig. U2 Engine compartment details (L.H. side)

1 Air pump
2 Connection block and relief valve
3 Check valves
4 'A' bank air manifold
5 Weakening device cut-out switch

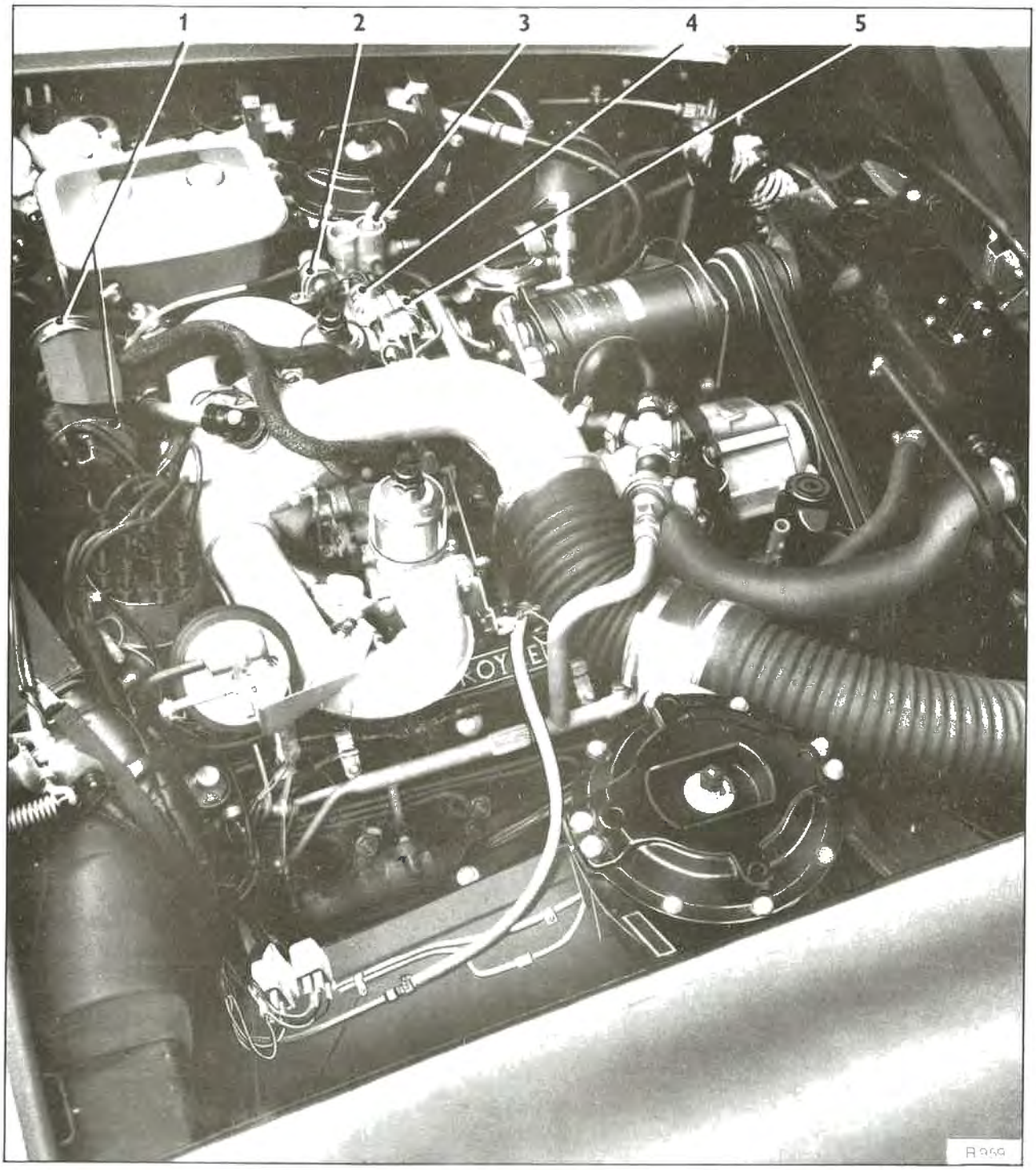

Fig. U3 Engine compartment details (R.H. side)

1 Exhaust gas recirculation valves
2 Exhaust gas recirculation cut-off solenoid
3 Weakening device assembly
4 Weakening device cut-off solenoid
5 Anti 'run-on' solenoid

Printed in England
© Rolls-Royce Motors Limited 1977

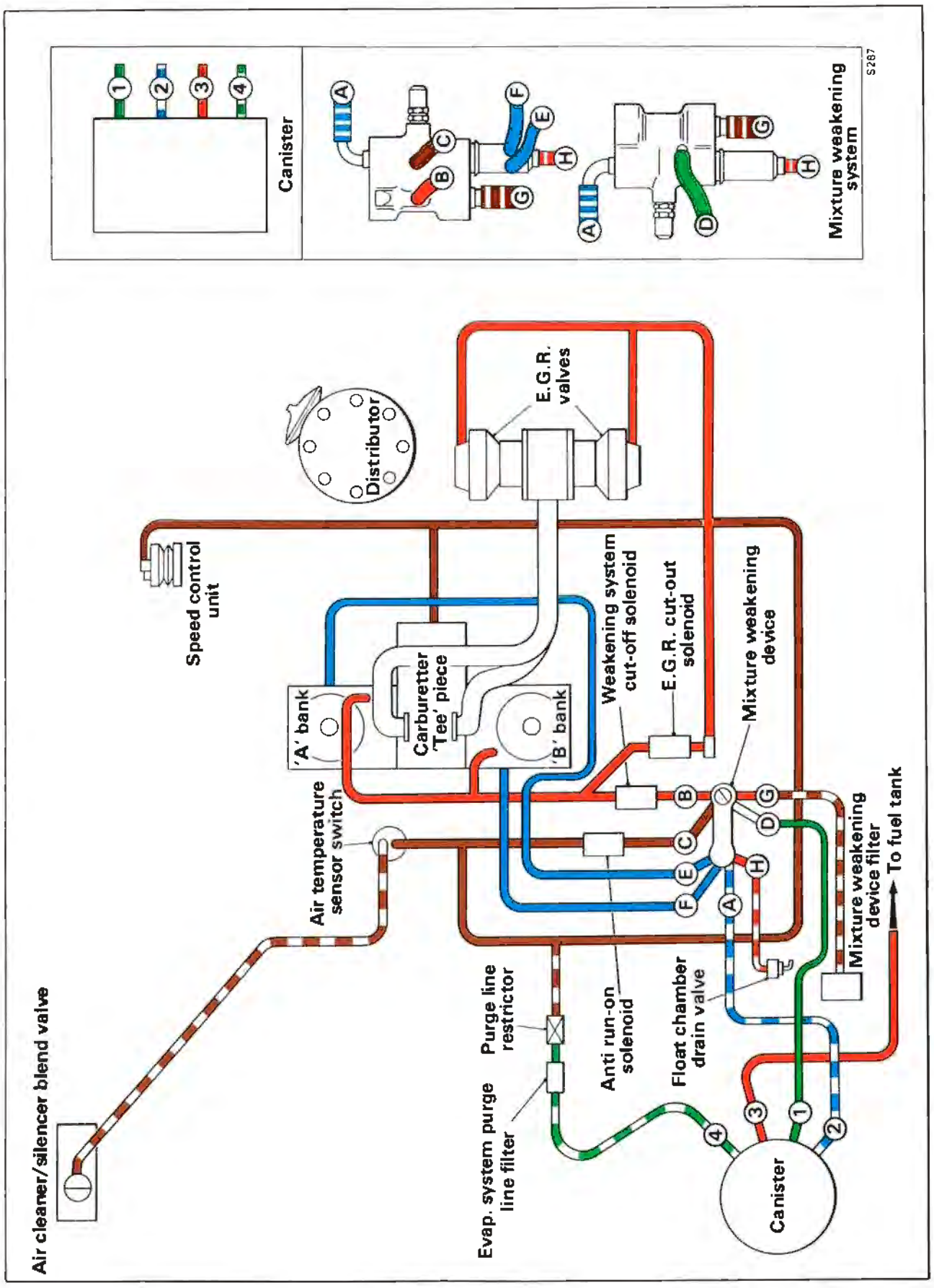

Fig. U4 Hose routing diagram - 1977 model year cars

Printed in England
© Rolls-Royce Motors Limited 1977
January 1977
T.S.D. 4200 (Australia)

Section U2

Exhaust emission control system

The Exhaust Emission Control System is designed to reduce the carbon monoxide, unburnt hydrocarbon and oxides of nitrogen content in the exhaust gases.

The system does not eliminate the danger caused by inhaling exhaust gases in a confined area.

Air from the atmosphere is drawn into the engine driven air injection pump through a centrifugal filter. From the pump, a quantity of air proportional to engine speed passes via a three-way connection block (containing a relief valve), through check valves to the air manifolds and then into the exhaust ports. This air combines with the exhaust gases discharged from the combustion chambers and promotes the oxidation process in the exhaust system. The gases then pass through the exhaust system to atmosphere.

In addition, a proportion of the exhaust gas from the exhaust balance pipe situated between the two downtake pipes, is recirculated through vacuum operated metering valves into the carburetter 'tee' piece, just downstream of the throttle plates. The recirculated exhaust gas mixes with the inlet charge of fuel/air mixture in the induction manifold and is distributed to the cylinders, lowering the peak combustion temperature and reducing oxides of nitrogen emissions.

Before commencing work on the exhaust emission control system, care should be taken to ensure that the relevant components are not hot.

The system is illustrated in Figure U5 and comprises the following main components.

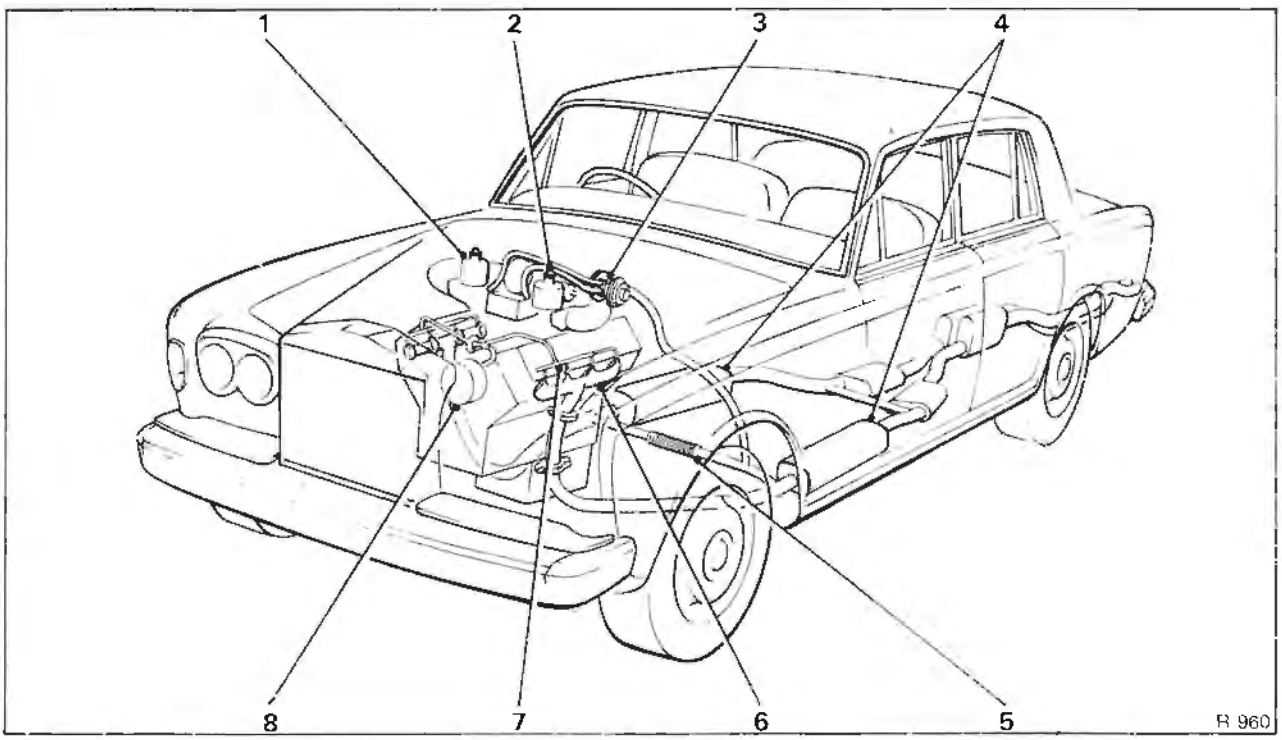

Fig. U5 Exhaust emission control system

1 'A' bank carburetter
2 'B' bank carburetter
3 Exhaust gas recirculation valves
4 Exhaust system front silencers
5 Exhaust system balance pipe
6 'B' bank exhaust manifold
7 'B' bank air manifold
8 Air pump

Air injection system (see Fig. U6)
Air manifolds
Air pump
Check valves
Centrifugal air filter
Pressure relief valve
Three-way connection block

Exhaust gas recirculation system (E.G.R.) (see Fig. U9)
Cut-off solenoid (see Section U7)
Cut-out switch (see Section U7)
Distribution pipes
E.G.R. valves
E.G.R. valves heatshield
Feed pipe
Full throttle cut-out micro-switch (see Section U7)

Exhaust system (see Fig. U5)
(For details of the Exhaust system refer to Chapter Q).

For details of the servicing and maintenance requirements of the Exhaust Emission Control System, refer to the Service Schedules Manual - T.S.D. 4117

Air injection system (see Figs. U5 and U6)
A detailed description of the air injection system is given at the beginning of this section.

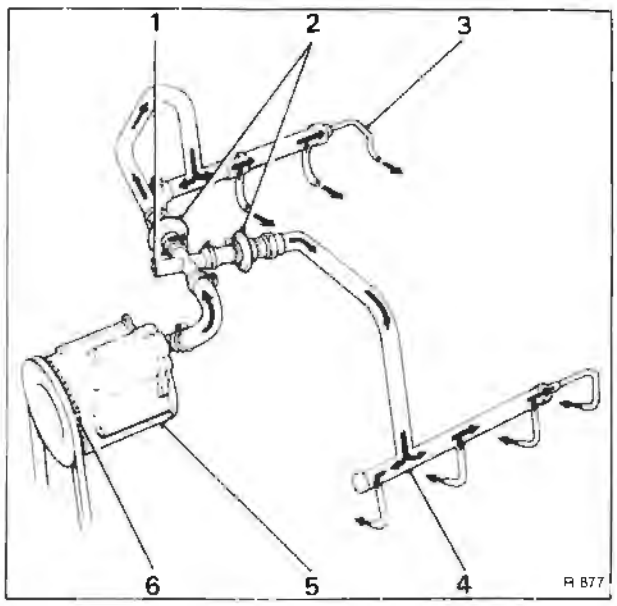

Fig. U6 Air injection system
1 Relief valve
2 Check valves
3 'A' bank air manifold
4 'B' bank air manifold
5 Air pump
6 Air pump intake

Air injection system - To test
1. Connect an electric impulse tachometer to the engine in accordance with the manufacturer's instructions.
2. Start and run the engine at a constant speed of 2 000 r.p.m., check that air does not escape from the relief valve.
3. If air does escape during Operation 2, check that the correct (blue) setting plug is fitted to the pressure relief valve.
4. If the system does not operate as described in Operation 2, stop the engine and fit a new three-way connection block assembly (containing the pressure relief valve).
5. Repeat Operation 2.
6. Stop the engine and remove the test equipment.

Air injection system - Leak check
Check the air injection system for air leaks by carrying out the following sequence of operations.
1. Ensure that the ignition is switched off.
2. Visually inspect the condition of all hoses, pipes and joints associated with the air injection system.
3. Ensure that all worm drive clips are tight.
4. Start the engine and listen carefully for any evidence of an air leak from the system.
5. If an air leak is suspected it is permissible to coat the component or hose with a soap solution; soap bubbles will confirm an air leak.

Air injection system - Fault diagnosis
To diagnose malfunctioning of the air injection system refer to Section U8 - Fault diagnosis.

Air manifolds
The air manifolds convey air from the check valves to the engine exhaust ports. One air manifold is fitted to each bank of cylinders and is identified as 'A' bank air manifold or 'B' bank air manifold.

To remove an air manifold, unscrew the check valve union and the four ¾ in. A/F adapters in the cylinder head.

The 'A' bank air manifold is reasonably straight forward to withdraw but 'B' bank air manifold will require the disconnecting of several other hoses and pipes (e.g. choke stove pipes, fuel evaporation weakening device hoses and pipes, etc.), to facilitate withdrawal.

Fit the air manifolds by reversing the procedure given for removal, noting that the check valve union has a tapered thread. All the adapters in the cylinder head should be torque tightened to the figures given in Chapter P.

Air pump
The air pump is of the rotary vane type and is belt driven from the engine coolant pump. The centrifugal air filter is an integral part of the pump and is situated between the pump body and the pump driving pulley.

Air pump - To remove (see Fig. U7)
1. Disconnect the battery (refer to Chapter M).
2. Unscrew the worm drive clip and detach the hose from the pump to the three-way connection block, at the pump. Blank off the hose and pump connections to prevent the ingress of dirt, etc.
3. Slacken the two 3/16in. A/F setscrews on the drive belt adjustment strut; remove the upper bolt.
4. Remove the drive belt from the pulley.
5. Support the air injection pump and unscrew and remove the 3/16in. A/F mounting setscrew situated on the opposite side of the pump pulley.

Air pump - To fit
Fit the air pump by reversing the procedure for removal noting the following.
1. Ensure that the driving belt is adjusted so that an applied force of 5,5 kg. (12 lbs.) mid-way between the air injection pump pulley and the coolant pump pulley causes the belt to deflect 9,5 mm. (0.375 in.).

Air pump pulley
1. To remove, unscrew and remove the three setscrews situated around the centre of the pulley. Withdraw the pulley.
2. To fit the pulley, reverse the procedure given for removal ensuring that the setscrews are torque tightened to the correct figure (see Chapter P).

Check valves
The check valves are non-return valves (one-way valves) and one is fitted into the air injection system between the air pump and the air manifolds, for each bank of cylinders.

The check valves prevent the backflow of exhaust gases into the air lines or air pump, they operate whenever the exhaust back pressure exceeds the air pump delivery pressure at high speed and/or in the case of air pump drive belt failure.

To remove a check valve, slacken the worm drive clip situated on the air pump to check valve hose. Unscrew the union from the air manifold and withdraw the check valve. Fit a check valve in the reverse order.

Pressure relief valve (see Figs. U6 and U8)
The spring loaded pressure relief valve is permanently housed within the three-way connection block, its function is to allow excess air to escape from the air injection system when the check valves are closed. The relief valve prevents damage to the pump vanes and excess exhaust temperatures under extreme operating conditions.

If it becomes necessary to remove the pressure relief valve three-way connection block, slacken the worm drive clips on the three connecting hoses and withdraw the assembly.

To test the pressure relief valve, blank off the two connections for the check valves and apply pressure to the connection from the pump; ensure that the relief valve operates within the following acceptable limits.
0,5 kg/sq.cm. to 0,6 kg/sq.cm.
(7.4 lb/sq.in. to 8.4 lb/sq.in.)

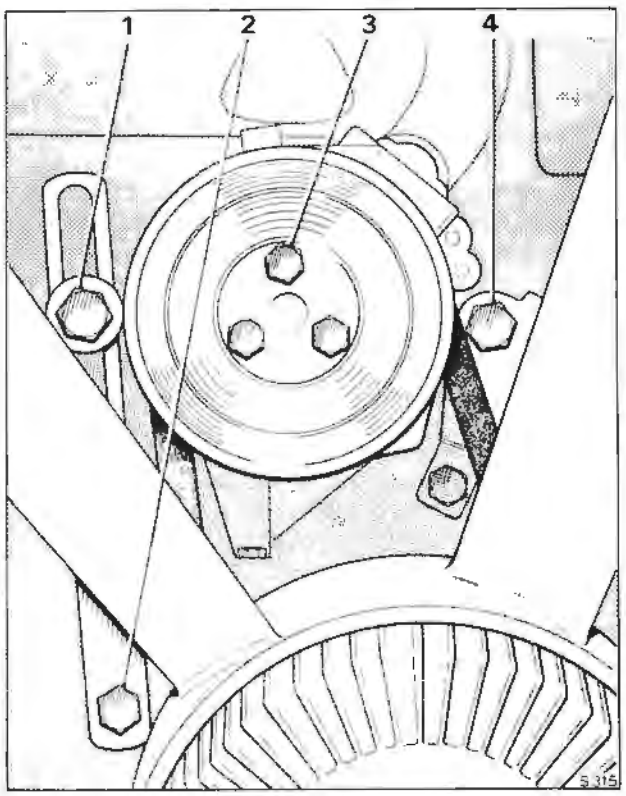

Fig. U7 Air injection pump
1 Adjustment strut upper setscrew
2 Adjustment strut pivot setscrew
3 Pulley retaining setscrews
4 Air pump mounting setscrew

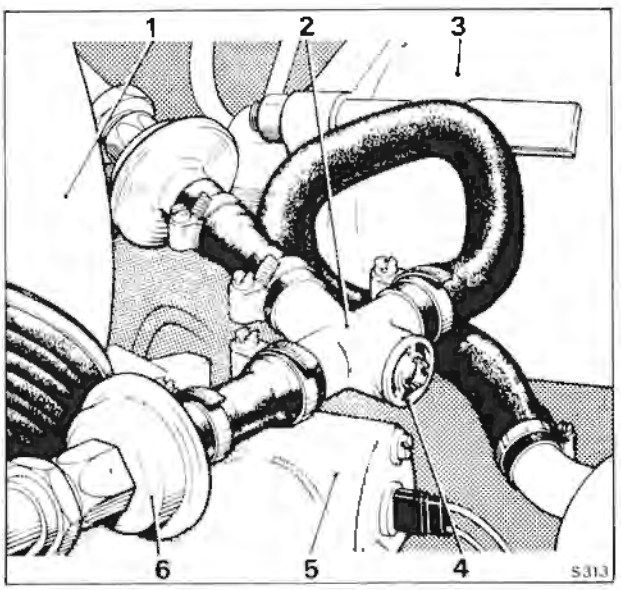

Fig. U8 Three-way connection block
1 Carburetter air intake
2 Three-way connection block
3 Refrigeration compressor
4 Air injection system pressure relief valve
5 Thermostat elbow
6 Check valve

Printed in England
© Rolls-Royce Motors Limited 1977
December 1977
T.S.D. 4200
(Australia)

Exhaust gas recirculation system (E.G.R.)

(see Figs. U5 and U9)

A detailed description of the exhaust gas recirculation system (E.G.R.) is given at the beginning of this section.

Distribution pipes

The distribution pipes convey the recirculated exhaust gas from the E.G.R. valves into the carburetter 'tee' piece.

Distribution pipes - To remove

1. Using a 7/16 in. A/F spanner unscrew and remove the two nuts and washers securing the distribution pipes to the E.G.R. valve mounting block.
2. Unscrew the 7/16 in. A/F setscrews retaining the heatshield to 'B' bank air horn; collect the washers.
3. Ease the mounting block rearward to free the joint face; discard the gasket.
4. Support the weight of the distribution pipes.
5. Unscrew and remove the four 2 B.A. setscrews and washers securing the two distribution pipe flanges to the carburetter 'tee' piece.
6. Withdraw the distribution pipes and discard the gaskets.

Distribution pipes - To fit

Fit the distribution pipes by reversing the procedure given for removal, noting the following points.

1. Ensure that all joint faces are clean and free from carbon deposits.
2. Coat the joint faces and gaskets at the carburetter 'tee' piece with 'Wellseal'.

Distribution pipes - To clean

1. Remove the distribution pipes as described in Distribution pipes - To remove.
2. With a pointed scraper clean as much carbon deposit as possible from inside the distribution pipes and the joint faces. Particular attention should be given to the carburetter end of the pipes, because the majority of the carbon deposit will be found in this area.
3. Using wire brushes complete the cleaning operation on the distribution pipes.
4. With a pointed scraper remove the carbon deposits from the carburetter 'tee' piece connection orifices.
5. Before fitting the distribution pipes thoroughly blow-out the pipes and carburetter 'tee' piece connections with compressed air.
6. Fit the distribution pipes as described in Distribution pipes - To fit.

E.G.R. valves (see Fig. U10)

A proportional flow recirculation system is used. Exhaust gas from the balance pipe between the two downtakes of the dual exhaust system passes through twin metering orifices and is recirculated into the carburetter 'tee' piece. Atmospheric pressure is maintained downstream of the metering orifices by means of the control valves so that the recirculation flow is proportional to the relative effective areas of the metering orifices and the main exhaust system.

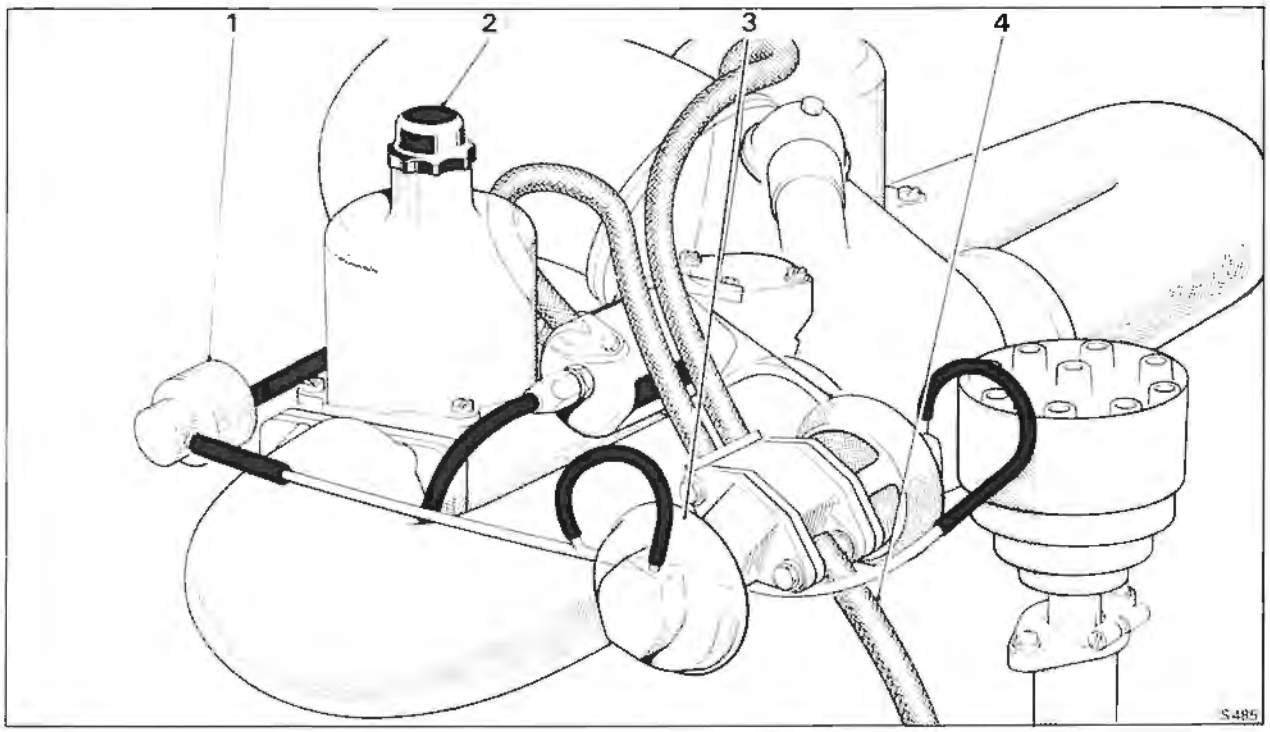

Fig. U9 Exhaust gas recirculation system

1 E.G.R. cut-off solenoid
2 'B' bank carburetter
3 E.G.R. valves
4 E.G.R. feed pipe

Dilution of the inlet charge with exhaust gas lowers the peak combustion temperature and reduces the formation of oxides of nitrogen.

Twin vacuum operated control valves each with an integral pressure transducer are used and the metering orifice of each valve is incorporated in an extension of the valve seat. A carburetter throttle gated vacuum signal is used to operate the valve. This signal is modulated by the integral transducer valve and applied to the control valve diaphragm so that the control valve lift is adjusted to maintain a constant control pressure, just above atmospheric pressure between the metering orifice and the control valve seat.

When the engine load is increased, the control pressure exceeds the transducer valve setting and the transducer valve closes applying the full vacuum signal to the control valve diaphragm and thus opening the control valve and increasing the E.G.R. flow. Similarly, as the engine load is reduced, the control pressure becomes less than the transducer valve setting and the transducer valve opens, venting the diaphragm chamber to atmosphere and causing the control valve to close and reduce the E.G.R. flow. The transducer valve constantly cycles adjusting the control valve lift to maintain a constant control pressure under all normal operation conditions.

The use of a throttle gated vacuum signal ensures complete control valve closure at idle to maintain good idle quality.

To improve starting and drive-away under low temperature conditions a solenoid valve (see Section U7) interrupts the carburetter vacuum signal to the E.G.R. valves until a predetermined coolant temperature is reached.

A micro-switch operated by the throttle lever (see Section U7) also controls this solenoid to provide E.G.R. cut-out at full throttle. At high engine speed the exhaust gas back pressure is high. As a result, the integral transducer valve directs full carburetter vacuum signal to the control valves. At high engine speed under full throttle operation the air intake restriction is sufficient to produce a carburetter vacuum signal large enough to open the control valves, this results in excessive flow under these conditions which would seriously degrade performance and reduce the safety margin for overtaking.

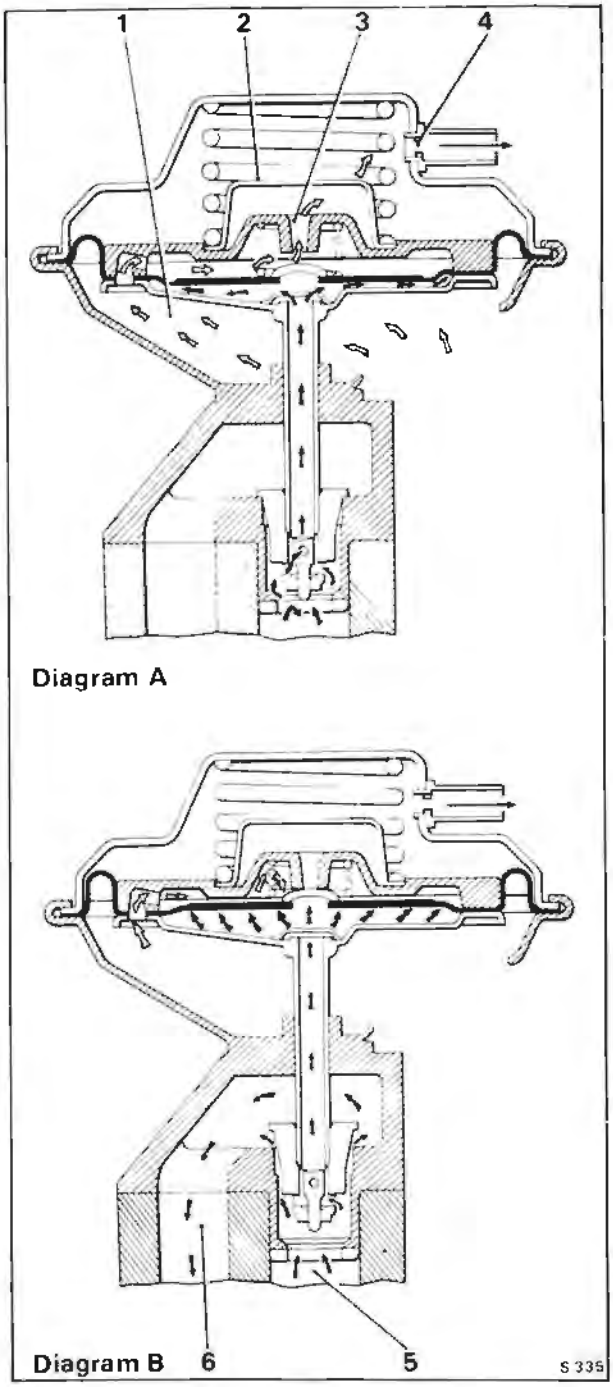

Fig. U10 Exhaust gas recirculation valve

Ambient air ⇦
Exhaust gas ⬅

Diagram A - Exhaust pressure below operating value

1 Ambient air
2 Air filter
3 Air bleed
4 Restrictor

Diagram B - Exhaust pressure above operating value

5 Exhaust gas from balance pipe
6 Exhaust gas to carburetter 'tee' piece

E.G.R. valves - To remove

1. Detach the small diameter rubber hose from the valve.
2. Unscrew and remove the two ⅜ in. A/F nuts retaining the valve to the mounting flange; collect the two washers.
3. Withdraw the valve and remove the gasket from the mounting flange.
4. Repeat Operations 1 to 3 inclusive on the second valve.

Printed in England
© Rolls-Royce Motors Limited 1979
November 1979
T.S.D. 4200
(Australia 1977 Model year)

E.G.R. valves - To fit
Fit the valves by reversing the procedure for removal, noting the following points.
1. Ensure that the valve pintle (see Fig. U10) is secure on the valve stem.
2. Ensure that the valve and mounting flange joint faces are clean and free from carbon deposits.
3. Always use a new mounting flange gasket.

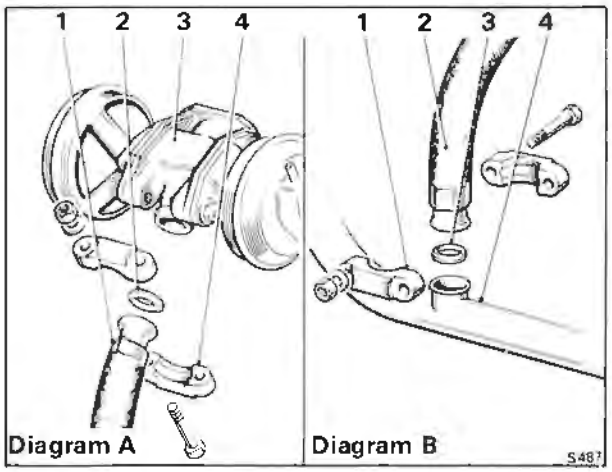

Fig. U11 E.G.R. feed pipe joints
Diagram A - Upper joint
1 Feed pipe
2 Sealing ring
3 E.G.R. valves assembly
4 Clamp bracket
Diagram B - Lower joint
1 Clamp bracket
2 Feed pipe
3 Sealing ring
4 Exhaust balance pipe

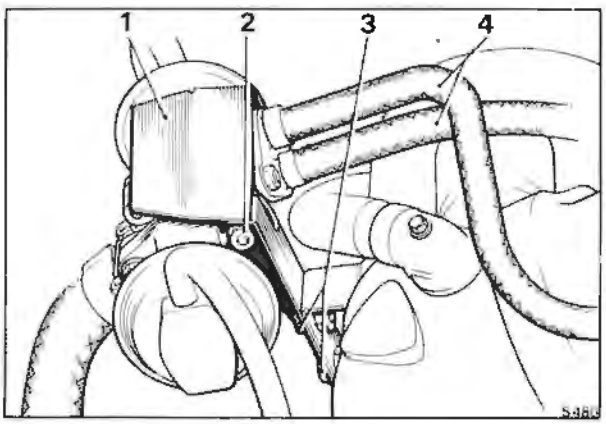

Fig. U12 E.G.R. heatshield
1 Heatshield
2 Retaining nut
3 Retaining screws
4 Distribution pipes

E.G.R. valves - To clean
1. Remove the valves as described in E.G.R. valves - To remove.
2. Using a scraper, remove all carbon film from the valve and mounting flange faces; complete the operation with a wire brush.
3. Clean the carbon from the valves using a wire brush fitted into a portable drill. Take care not to damage the valve seating area.
4. Thoroughly blow out the valves with compressed air to ensure that all loose carbon particles are removed.
5. Upon completion of the cleaning operations, fit the valves to the engine mounting flange as described in E.G.R. valves - To fit.

E.G.R. valves - To check
The E.G.R. system is automatically controlled by exhaust backpressure to maintain a constant E.G.R. proportion over normal road load conditions. Checks to ensure the correct operation of the valves are only required under no load conditions as follows.
1. Connect an electric impulse tachometer to the engine in accordance with the manufacturer's instructions.
2. Ensure that the parking brake is firmly applied and that the gear range selector is in the Park position.
3. Ensure that the pressure tapping cap fitted to the weakening device is correctly tightened.
Start and run the engine until normal operating temperature is attained.
4. Ensure that the engine has run for at least 25 mins. after the engine coolant thermostat has opened.
5. Allow the engine to return to the idle speed.
6. Increase the engine speed slowly noting the operation of the E.G.R. valves.
7. The E.G.R. valves should commence to open between 800 r.p.m. and 1 100 r.p.m.
If the valves either fail to open or open late check for the following possible causes.
a. Failed E.G.R. cut-out switch (see Section U7).
b. Failed E.G.R. cut-off solenoid (see Section U7).
c. Failed E.G.R. full throttle cut-out micro-switch (see Section U7).
d. Leak or blockage in the carburetter signal pipe to weakening device cut-off solenoid.
e. Leak or blockage in the E.G.R. valve signal pipe or hose from the E.G.R. cut-out solenoid to the E.G.R. valves.
f. Advanced ignition timing (see Section U6).
If the valves begin to open early check for the following possible cause.
a. Retarded ignition timing (see Section U6).
8. If the E.G.R. valves do not function correctly after carrying out Operations 1 to 7 inclusive, replace the offending valves with new units.
9. Carry out Operations 1 to 7 inclusive.

E.G.R. feed pipe (see Fig. U5)
The E.G.R. feed pipe conveys exhaust gas that is to be recirculated from the exhaust balance pipe to the exhaust gas recirculation valves.

E.G.R. feed pipe - To remove
1. Unscrew the two 7/16 in. A/F nuts from the clamp at the upper end of the feed pipe (see Fig. U11).
2. Collect the two washers and 'split' the clamp from the spherical joint.
3. Repeat Operations 1 and 2 on the lower joint adjacent to the exhaust system balance pipe.

E.G.R. feed pipe - To fit
Fit the E.G.R. feed pipe by reversing the procedure given for removal, noting the following.
1. Ensure that the joint faces are clean and free from carbon deposits.

E.G.R. valves heatshield - To remove (see Fig. U12)
1. Slacken the two forward ½ in. A/F nuts one on either side of the mounting flange.
2. Unscrew and remove the two 7/16 in. A/F set-screws retaining the heatshield to the rear of 'B' bank air horn; collect the washers.
3. Ease the assembly forward to release the heatshield slots from the retaining studs.
4. Withdraw the heatshield.

E.G.R. valves heatshield - To fit
Fit the heatshield by reversing the procedure given for removal.

Printed in England
© Rolls-Royce Motors Limited 1977
January 1977
T.S.D. 4200
Australia)

Section U3

Fuel evaporation emission control system

The Fuel Evaporation Emission Control System eliminates direct venting of the fuel system, thus preventing the release of unburnt hydrocarbons into the atmosphere.

Vapour from the fuel system is collected and stored in a charcoal filled canister. The canister is purged whenever the engine is running and the stored fuel vapour is extracted from the charcoal and burnt in the engine.

The system is illustrated in Figure U13 and comprises the following main components.

Canister (see Fig. U14)
Carbon granules (charcoal)
Float chamber connection
Fuel tank connection
Polyurethane air filter
Purge line connection
Weakening device connection

Fuel tank (see Fig. U16)
Combined pressure/vacuum relief valve
Expansion tank
Fuel trap assembly

Purge line (see Fig. U13)
Air filter
Restrictor

Weakening device (see Figs. U23 and U24)
Adjustable orifice
Air filter
Anti 'run-on' solenoid
Cut-off solenoid
Cut-out switch
Float chamber drain valve
Float chamber vent valve
Fuel receiver chamber
Non-return valves
Venturi chamber

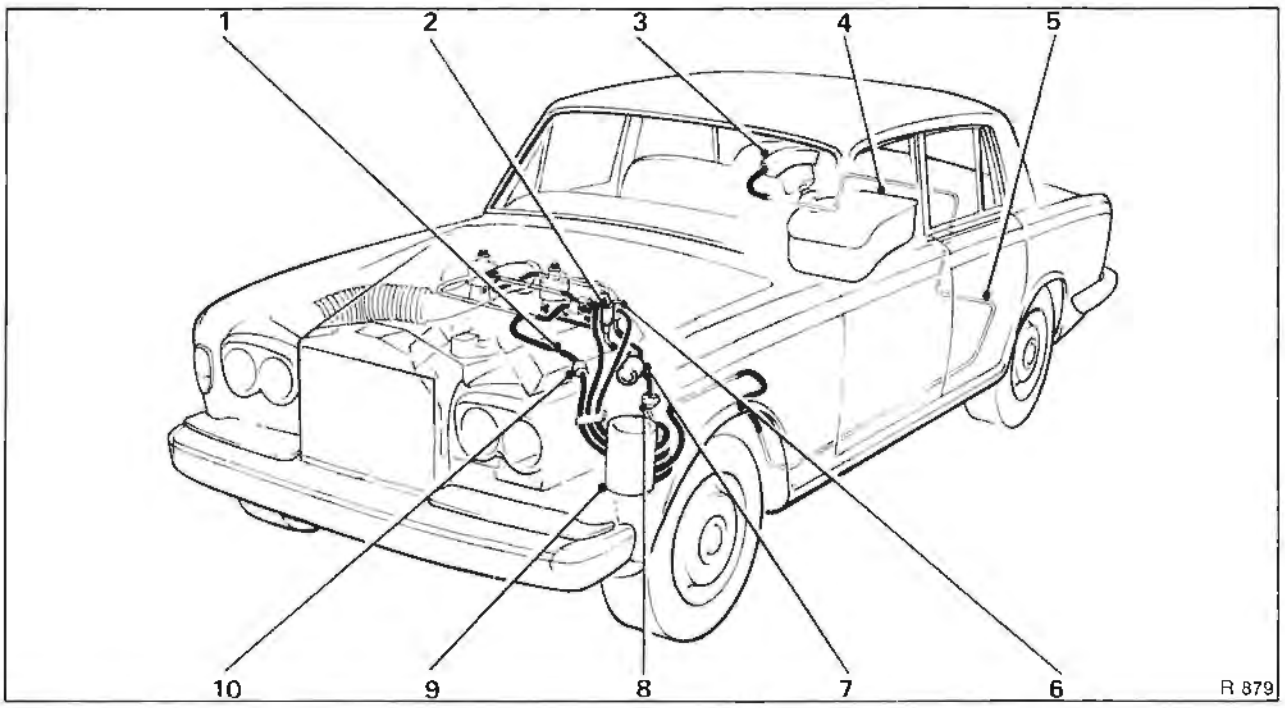

Fig. U13 Fuel evaporation emission control system

1 Purge line restrictor
2 Float chamber vent valve
3 Fuel trap assembly
4 Fuel tank
5 Fuel vapour line
6 Weakening device
7 Weakening device filter
8 Float chamber drain valve
9 Evaporation loss control canister
10 Purge line filter

Printed in England
© Rolls-Royce Motors Limited 1977
January 1977
T.S.D. 4200 (Australia)

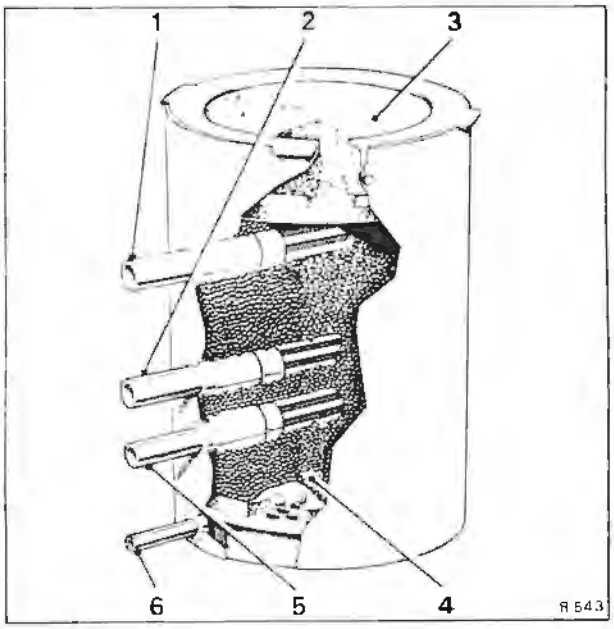

Fig. U14 Control canister
1 Weakening device connection
2 Float chamber vent connection
3 Polyurethane filter
4 Carbon
5 Fuel tank vent connection
6 Purge line connection

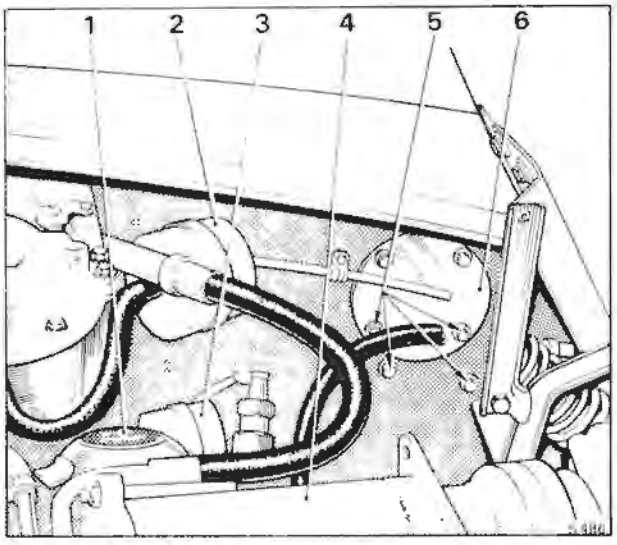

Fig. U15 Foam filter access cover, purge line filter and weakening device filter
1 Engine oil filler cap
2 Weakening device filter
3 Purge line filter
4 Refrigeration compressor
5 Canister securing setscrews
6 Foam filter access cover

For details of the servicing and maintenance requirements of the Fuel Evaporation Emission Control System, refer to the Service Schedules Manual T.S.D. 4117.

Control canister (see Figs. U13 and U14)
The evaporation emission control canister is situated under the left-hand front wing. It is a cylindrical container filled with activated carbon granules which adsorb and retain fuel vapour. There are connections for the mixture weakening device vent, the fuel receiver vent, the fuel tank vent and the purge line. The top of the canister is open to atmosphere and contains a Polyurethane foam filter element.

When the engine is running air is drawn from the atmosphere through the foam filter element and carbon granules to the lowest connection on the canister. The air, containing fuel vapour from the carbon granules then passes into the engine via the purge line.

Control canister - To remove
1. Remove the front left-hand road wheel as described in Chapter R.

Note
Left-hand is determined when viewed from the driver's seat.

2. Remove the front section of the underwing sheet by unscrewing the small screws situated around the outer edge of the sheet. Resistance may be experienced when the sheet is being freed, as it is sealed around the edge with Bostik Sealing Compound 771.
3. The canister will be clearly visible towards the front of the vehicle.
4. Using the special pliers (RH 8090), remove the steel retaining clips from the four hose connections to the canister. Label the hoses to facilitate identification and withdraw the four hoses from the canister.
5. Raise the bonnet and from inside the engine compartment locate the canister foam filter access cover (see Fig. U15).
6. Unscrew and remove the four setscrews indicated as securing setscrews in Figure U15. Before removing the final setscrew support the control canister.
7. Withdraw the canister from beneath the wing.

Control canister - To fit
Fit the canister by reversing the procedure described for removal, noting the following points.
1. Ensure that the rubber hoses are in a good condition and new hose retaining clips are fitted.
2. Ensure that the underwing sheet is sealed with Bostik Sealing Compound 771.

Polyurethane foam filter element - To renew
It is not necessary to remove the canister from the car in order to extract the polyurethane foam filter element. A detachable cover is situated in the left-hand valance (see Fig. U15).

1. Unscrew the four screws retaining the access cover, lift off the cover and withdraw the filter element from the top of the canister.

When fitting a new element, ensure that it is correctly positioned inside the retaining rim of the canister. Fit the access cover and tighten the setscrews.

Fuel tank assembly
The fuel tank assembly comprises the fuel tank, the expansion tank and the fuel trap assembly (see Fig. U16).

The fuel tank is vented from three positions to the fuel trap assembly which is mounted above the fuel filler. One vent is from the fuel filler neck and the others are from the fuel tank.

The three vent lines join at a common junction block situated adjacent to the fuel filler neck, the main vent line then passes to the fuel trap assembly.

From the fuel trap a vent line passes under the floor of the car to the evaporation loss control canister.

The fuel trap assembly acts as a liquid separator and prevents liquid fuel from being transferred to the evaporation loss control canister under severe driving manoeuvres when the fuel tank is full or during expansion of the fuel at high ambient temperatures.

A combined relief and vacuum valve fitted into the end of the fuel trap assembly prevents an excessive pressure 'build up' in the fuel tank due to vapourisation or depression (as fuel is consumed), in the event of a blockage in the vent line to the evaporation loss control canister.

Included in the main fuel tank is a small expansion tank (see Fig. U16) of 3,125 litres (5.5 Imp. pt. — 6.7 U.S. pints) capacity. The expansion tank inhibits complete filling of the main fuel tank and provides additional fuel expansion volume to contend with extreme temperature conditions.

When the car is being filled with fuel, the main fuel tank (without an expansion tank) could normally be completely filled, leaving only the filler neck, vent connector pipes and fuel trap assembly to accommodate the expansion of the fuel. An expansion tank is therefore situated in the upper part of the main fuel tank and as the fuel level rises above the lower part of the assembly it flows inside through two small holes in the base. Two additional holes in the top of the expansion tank allow air to escape.

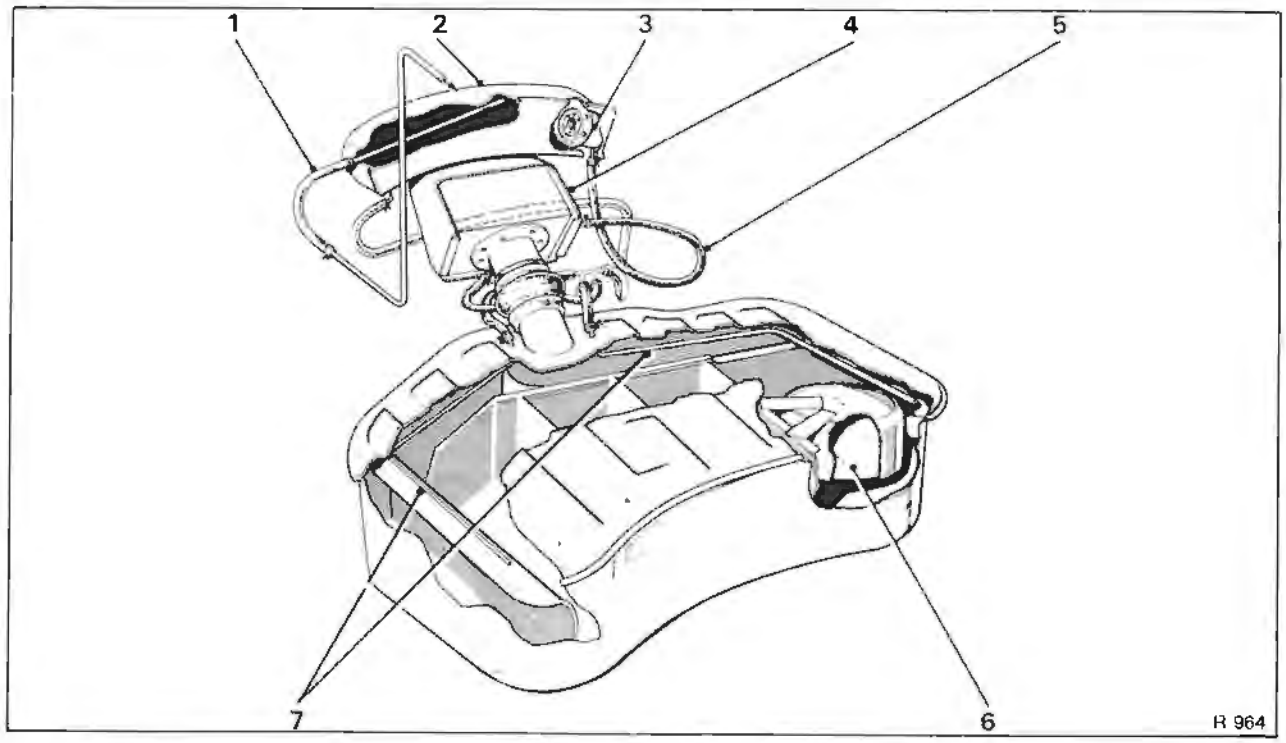

Fig. U16 Fuel tank
1 Fuel vapour line
2 Fuel trap assembly
3 Combined relief and vacuum valve
4 Fuel filler box
5 Relief valve vent
6 Expansion tank and overfill limiter
7 Vent pipes

Printed in England
© Rolls-Royce Motors Limited 1977

Fuel tank - To remove

1. Carry out the usual workshop safety precautions.
2. Disconnect the battery.
3. Drain the fuel from the tank.
4. Remove the carpet and underlay from the luggage compartment floor to reveal the fuel tank (see Fig. U17).
5. Unscrew the four screws securing the circular metal cover over the float assembly (see Fig. U17); withdraw the cover.
6. Disconnect the three electrical leads from the float assembly (see Fig. U18); tape the loom away from the vacinity of the fuel tank.
7. Using the special pliers (RH 8090) remove the steel clip from the rubber hose situated one on either side of the fuel tank filler (see Fig. U19).

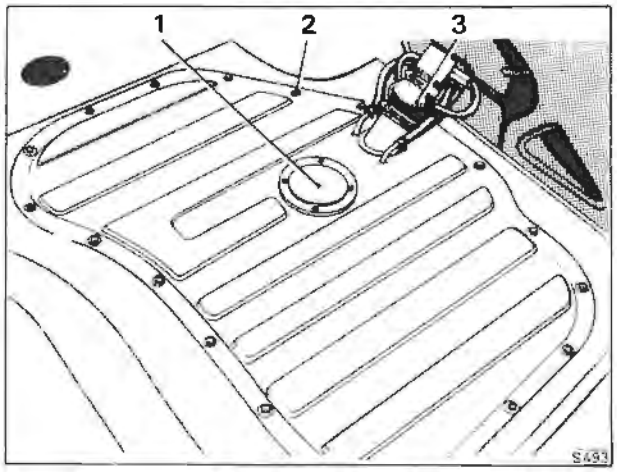

Fig. U17 Fuel tank installation

1 Float assembly cover
2 Fuel tank securing setscrews
3 Fuel filler assembly

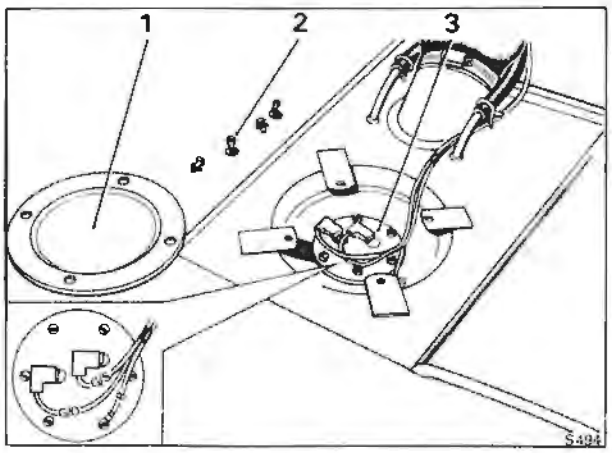

Fig. U18 Float assembly

1 Cover
2 Cover securing screws
3 Float assembly

8. Unscrew the worm drive clips securing the convoluted rubber filler hose to the filler box and tank filler connections; detach the convoluted hose from the fuel tank and blank off both open ends of the connection.
9. From under the car, unscrew the adapter securing the fuel feed pipe to the fuel tank (see Fig. U20), blank off both open ends of the connection.
10. Inside the luggage compartment, unscrew the $\frac{7}{16}$in. A/F setscrews situated around the fuel tank.
11. Carefully 'break' the seal between the fuel tank and the luggage compartment.
12. Withdraw the fuel tank by lifting it out through the luggage compartment.

Fuel tank - To fit

Fit the fuel tank assembly by reversing the procedure given for removal, noting the following points.

1. Apply a sealant such as 'Glasticon' to the luggage compartment floor around the area of the fuel tank securing setscrew holes (this area is used for seating the lip of the fuel tank), to provide a good seal when the fuel tank assembly is installed.
2. Ensure that all rubber hoses are in a good condition.
3. Always fit new steel clips to retain the various vent hoses.
4. After fitting the fuel tank, ensure that the adapter securing the feed pipe does not leak fuel with the fuel pumps operating.

Fuel trap assembly - To remove

1. Disconnect the battery and ensure that the usual workshop safety precautions are carried out.
2. Remove the carpet and underlay in the luggage compartment.
3. Remove the tool kit.
4. Remove the fuel filler door release ring.
5. Unscrew the five 'Phillips' headed screws from the side carpet; four secure the brackets retaining the tool kit and the fifth is positioned at the front of the side carpet.
6. Release the 'Tenax' clip situated adjacent to the rear lamps access point.
7. Remove the side carpet and the carpet covering the fuel filler neck. The carpet panel covering the filler neck is retained by a setscrew at the top (accessible from within the fuel filler box) and a small screw at the rear (that screws into the luggage compartment floor).
8. Using special pliers (RH 8090) remove the steel clips from the rubber hoses. Withdraw the hoses from their respective pipes.
9. Locate the electric loom that is fitted adjacent to the fuel trap assembly (see Fig. U21). Straighten the three clips securing the loom in the vacinity of the fuel trap assembly.

Gradually ease the loom in a downwards direction until it lies as shown in Figure U21; in this position the loom will not impede the removal of the fuel trap.

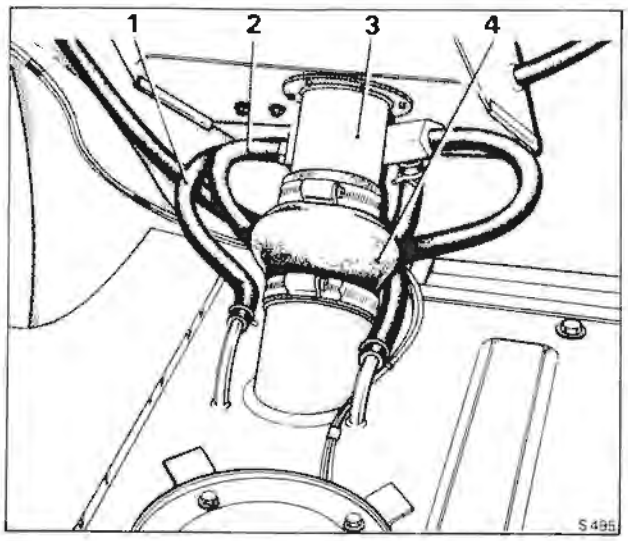

Fig. U19 Fuel filler assembly
1 Vent - Tank to junction block
2 Vent - Filler to junction block
3 Metal filler pipe
4 Convoluted filler hose

10. Unscrew and remove the three 2 B.A. setscrews securing the fuel trap assembly.
11. Slowly move the fuel trap rearward and downward until the lower end can be turned into the luggage compartment and the assembly withdrawn from the car.

Fuel trap assembly - To fit
Fit the fuel trap assembly by reversing the procedure given for its removal noting the following points.
1. Ensure that the rubber hose connections are in good condition.
2. Ensure that new steel retaining clips are used.

Fuel trap relief and vacuum valve - To remove
1. Remove the fuel trap assembly as described in Fuel trap assembly - To remove.
2. Unscrew the retaining setscrews, taking care not to lose the washers.
3. Withdraw the relief and vacuum valve.

Fuel trap relief and vacuum valve - To fit
Fit the relief and vacuum valve by reversing the procedure given for its removal noting the following points.
1. Ensure that the joint faces of the relief and vacuum valve and fuel trap assembly are clean and in good condition.
2. Fit a new gasket.

Fuel filler - To remove
1. Refer to Fuel trap assembly - To remove and carry out Operations 1 to 8 inclusive.
2. From inside the luggage compartment unscrew and remove the metal connection for the vent hose situated half-way up the metal filler pipe.
3. Unscrew the worm drive clips securing the convoluted rubber hose.
4. From inside the filler box remove the screws securing the filler assembly to the body.
5. Withdraw the metal filler assembly.

Fuel filler - To fit
Fit the fuel filler by reversing the procedure given for removal, noting the following points.
1. Fit new gaskets if necessary.

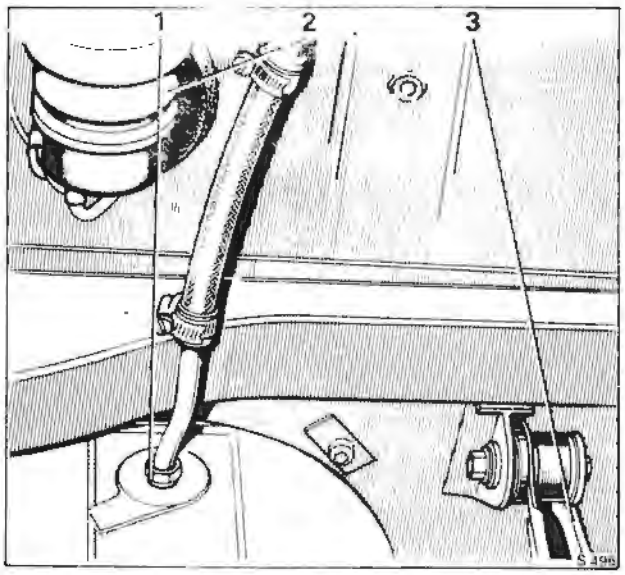

Fig. U20 Fuel feed pipe.
1 Adapter - Fuel tank to feed line
2 Fuel pump
3 Spare wheel carrier pivot

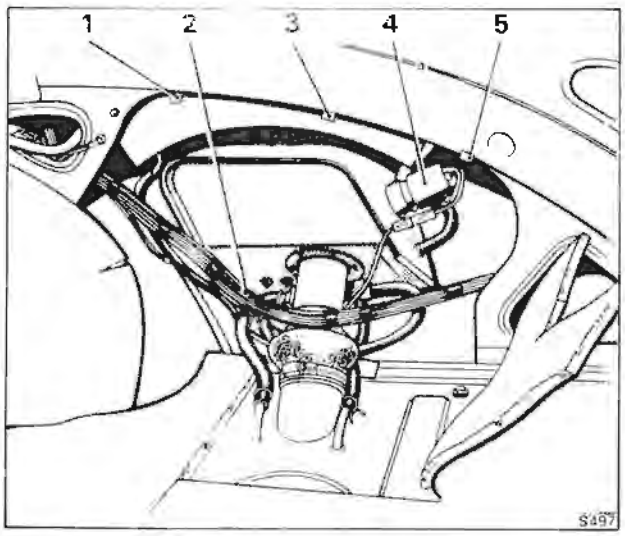

Fig. U21 Fuel trap removal/fitting
1 Loom retaining clip
2 Loom
3 Loom retaining clip
4 Fuel filler door release solenoid
5 Loom retaining clip

Printed in England
© Rolls-Royce Motors Limited 1977
January 1977
T.S.D. 4200 (Australia)

Fuel evaporation emission control system - To leak check

Whenever the various pipes, hoses and components of the fuel evaporation emission control system are disturbed, the system should be checked for air leaks upon assembly.

To test the system proceed as follows.

1. Position the vehicle on a ramp and carry out the usual safety precautions (i.e. ensure that the gear range selector lever is in 'Park' position, the parking brake firmly applied, the engine switched off, etc.,). Raise the ramp.
2. Remove the left-hand horn assembly (left-hand is decided when standing under the vehicle, looking towards the front), see Chapter M.
3. Through the resultant gap between the front wing and wing sheet, locate the emission control canister and identify the hose connection from the fuel tank (second from the bottom).
4. Using the special pliers (RH 8090), remove the steel retaining clip from the fuel tank connection hose at the control canister.
5. The fuel tank hose should be detached from the canister and connected to the test equipment (see Fig. U22).
6. Apply air pressure to the fuel tank hose via the test equipment until a reading of 38 cm. (15 in.) H_2O is attained and close the pressure supply.

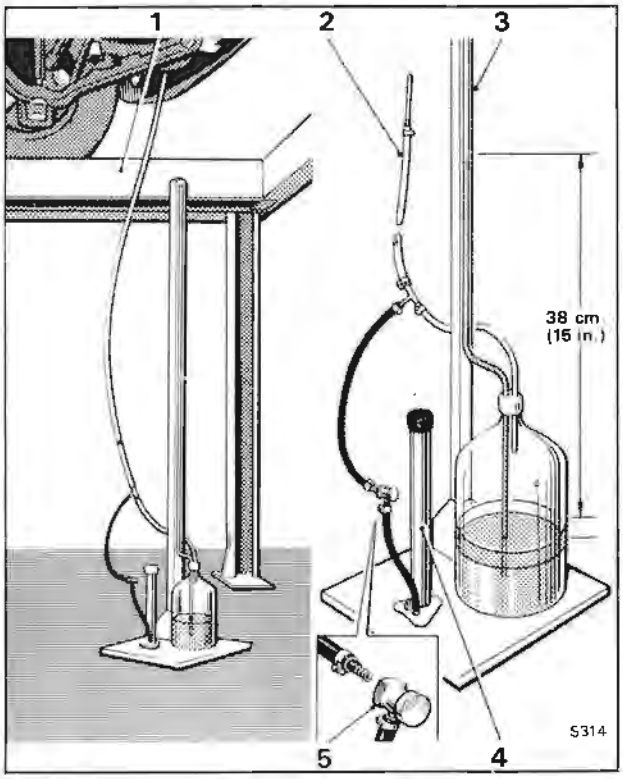

Fig. U22 Leak check test equipment

1 Ramp
2 Connection to fuel tank/canister hose
3 Test equipment
4 Pump
5 One way pressure valve

7. After 5 minutes again check the pressure reading, this should not have fallen by more than 12,7 mm. (0.5 in.).
8. If the pressure drop is more than 12,7 mm. (0.5 in.), progressively treat all joints in the system with soap solution to detect air leaks.
9. Rectify any air leaks and again leak check the system.
10. When the system is satisfactory, detach the test equipment and connect the hose to the control canister, secure with a new steel retaining clip.
11. Fit the left-hand horn assembly as described in Chapter M.

Purge line

The purge line consists of a rubber hose, passing from the lowest connection on the canister through the valance junction piece to the induction manifold connection on the opposite side of the engine (see Fig. U13). Incorporated into this hose is the purge line filter and restrictor.

When the engine is running, air drawn through the canister filter and carbon picks up the stored fuel vapours and passes them via the hoses, to the induction system at a point just below the choke housing. The restrictor in the line controls the flow rate at between 1,41 cu.m. per hr. and 1,98 cu.m. per hr. (50 cu.ft. per hr. and 70 cu.ft. per hr.) to maintain carburetter metering accuracy and the paper element line filter is fitted to prevent blockage of the restrictor.

Purge line filter

The purge line filter is situated on the left-hand valance just forward of the front road spring pot (see Fig. U15). The air filter assembly is a sealed unit and no attempt should be made to clean the element.

At the mileage intervals specified in the Service Schedules the purge line filter should be removed and a new assembly fitted as follows.

Purge line filter - To remove

1. Using the special pliers (RH 8090) remove the two steel retaining clips situated one on either side of the filter assembly.
2. Detach the inlet and outlet hoses.
3. Slacken the small setscrew that secures the clamp bracket around the filter assembly.
4. Swivel the clamp bracket to enable the filter assembly to be withdrawn.

Purge line filter - To fit

Fit the purge line filter by reversing the procedure given for removal, noting the following points.

1. Ensure that the filter assembly is fitted the correct way around; the word 'IN' moulded into the end of the casing should be towards the front of the vehicle.
2. Ensure that the rubber hoses are in a good condition and that new hose retaining clips are used.

Purge line restrictor
The purge line restrictor is situated in the purge line between the air filter and the induction manifold connection (see Fig. U13). The function of the restrictor is to maintain the air flow through the purge line within predetermined limits.

Purge line restrictor - To remove
1. Hold the restrictor firmly and slide the rubber hosing from both ends.

Purge line restrictor – To fit
Fit the restrictor by reversing the procedure given for removal, noting the following point.
1. Ensure that the purge line restrictor is fitted into the line correctly. This can be determined by comparing the diameters of the restrictor ends with those of the rubber hoses.

Purge flow rate - To check
1. Disconnect the hose from the engine side of the purge line filter and insert a flowmeter assembly (RH 8725) into the line between the filter and the restrictor. The flowmeter is a rotameter type capable of measuring between 1,4 cu.m/hr. and 2,0 cu.m/hr. (50 cu.ft/hr. and 70 cu.ft/hr.). The pressure drop across the meter must not exceed 5,08 cm.Hg. (2.0 in.Hg.).
2. Start and run the engine at 650 r.p.m.; the reading on the flowmeter should be between 1,41 cu.m/hr. and 1,99 cu.m/hr. (50 cu.ft/hr. and 70 cu.ft/hr.).
3. If the flow is less than the minimum figure quoted in Operation 2, stop the engine and substitute the purge line restrictor with a straight piece of metal pipe having an internal diameter larger than 4,76 mm. (0.187 in.).
4. Start and run the engine at 650 r.p.m.; the reading on the flowmeter should be in excess of 1,99 cu.m/hr. (70 cu.ft/hr.).
5a. If the flowmeter reading is above 1,99 cu.m/hr. (70 cu.ft/hr.) fit a new purge line restrictor and repeat Operation 2.
b. If the flowmeter reading is below 1,99 cu.m/hr. (70 cu.ft/hr.) the cause could be as follows.
(i) An air leak in any of the vacuum hoses that connect to the induction manifold connection (vacuum manifold).
(ii) A blockage in the vacuum manifold or any of the connecting hoses.

Any leaks or blockages should be rectified; the restrictor should be fitted and Operation 2 repeated. If the flow rate is still incorrect fit a new restrictor and again, repeat Operation 2.
6. Remove the test equipment and connect the hose to the purge line filter.

Weakening device
The mixture weakening device (see Fig. U23) is fitted adjacent to 'B' bank carburetter and incorporates a fuel receiver.

For any given position of the fuel metering needle, the rate of the discharge from the carburetters is governed by the difference in air pressure existing over the fuel in the float chamber and that over the jet.

The weakening device is designed to reduce the air pressure (create a depression) in the float chamber at part throttle, thereby reducing the rate of discharge from the jet.

The weakening device housing contains two chambers, (see Fig. U24), the venturi chamber, and the fuel receiver chamber, the two being interconnected by a passage and an adjustable venturi.

The venturi chamber is connected to a small drilling on the edge of the butterfly plates of both carburetters via the weakening device solenoid valve, with the throttle slightly open the drillings are subjected to manifold depression thus creating a depression in the venturi chamber which draws air from the weakening device air filter. This depression is also apparent in the fuel receiver chamber and subsequently in the carburetter float chambers.

The value of the depression is set by the position of the weakening device adjusting screw.

To obtain adequate float chamber venting to cope with hot soak conditions there is an additional vent from the fuel receiver. This incorporates a low pressure non-return valve to maintain float chamber depression under normal running conditions. In addition to this valve, a one-way valve is fitted into the venturi chamber to prevent any evaporating fuel being discharged to atmosphere.

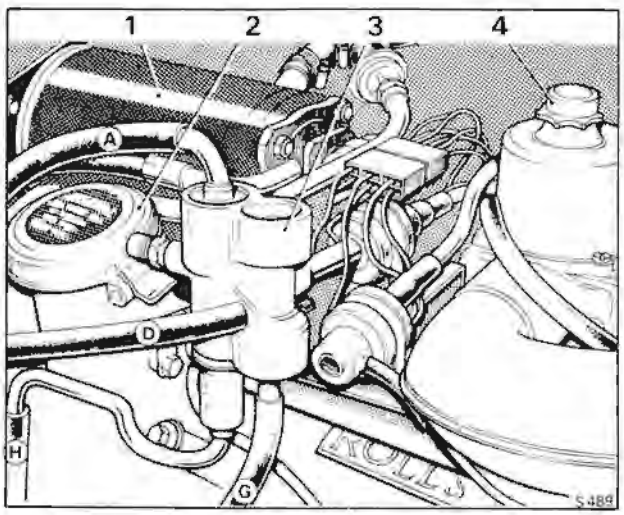

Fig. U23 Position of mixture weakening device
1 Refrigeration compressor
2 Engine oil filler
3 Mixture weakening device
4 'B' bank carburetter

Printed in England
© Rolls-Royce Motors Limited 1977

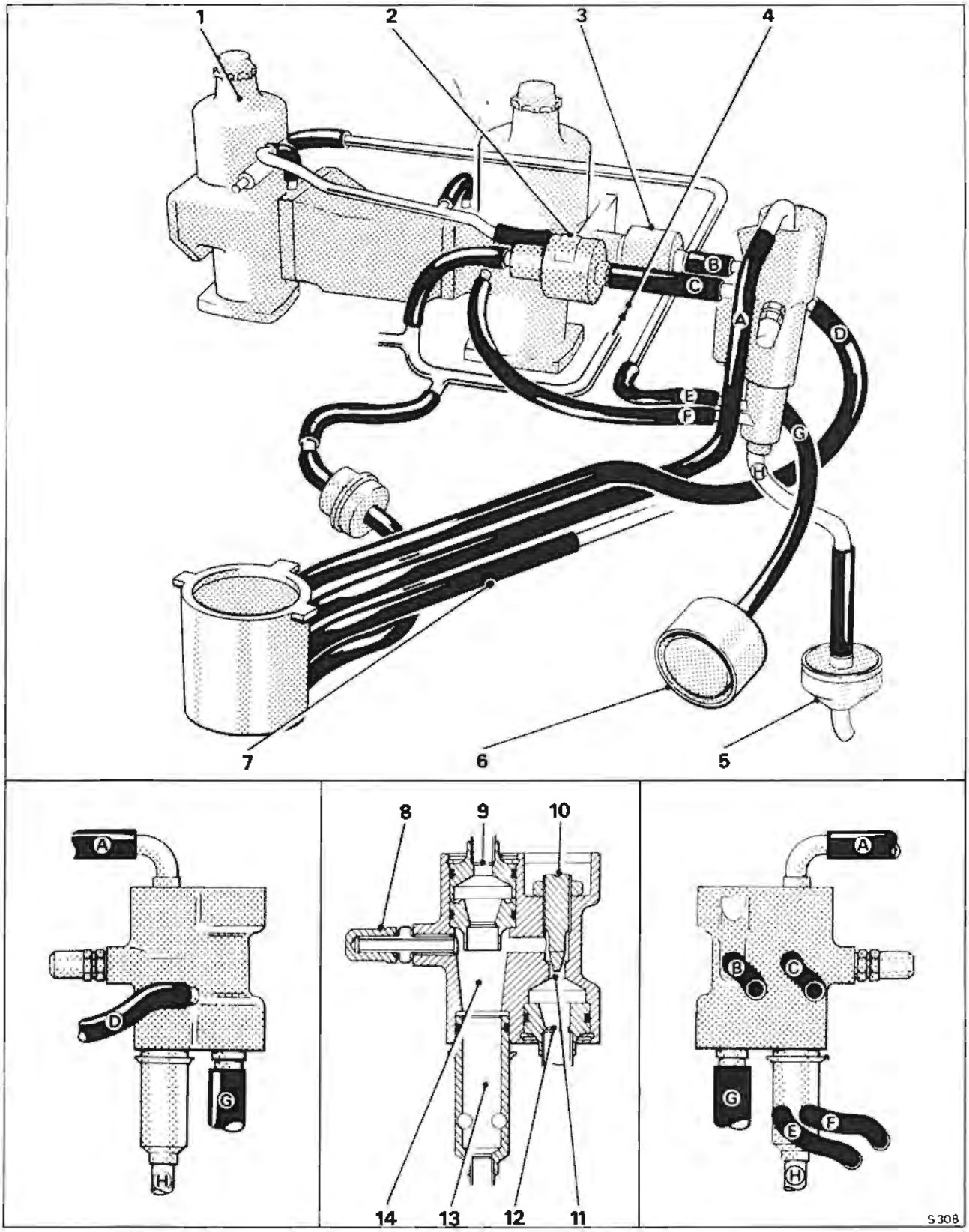

Fig. U24 Mixture weakening device

1	'A' bank carburetter	5	Float chamber drain valve	10	Adjusting screw
2	Anti 'run-on' solenoid	6	Weakening system air filter	11	Venturi chamber
3	Weakening device cut-off solenoid	7	Vent from fuel tank	12	Air intake valve
4	Induction manifold connection	8	Weakening device signal cap	13	Fuel receiver
		9	Float chamber vent valve	14	Fuel receiver chamber

A float chamber drain, also incorporating a low pressure non-return valve is mounted at the front of the engine adjacent to the oil filter, this valve is connected to the fuel receiver. Should flooding occur the head of fuel in the receiver is sufficient to open the drain valve thus preventing engine stalling if the float chamber needle valves stick.

Weakening device - To remove
1. Label all hoses connected to the weakening device assembly, this will facilitate assembly.
2. Disconnect all hoses to the weakening device.
3. Unscrew and remove the two small setscrews that retain the weakening device to the solenoid platform; the two screws are situated just below the pipe/hose connections for the anti 'run-on' solenoid and weakening device cut-off solenoid.
4. Withdraw the weakening device.

Weakening device - To fit
Fit the weakening device by reversing the procedure given for removal, noting the following point.
1. Ensure that all hoses connecting to the assembly are in a good condition and that all connections are 'air tight'.

Weakening device - To dismantle (see Fig. U24)
1. Remove the weakening device from the vehicle.
2. Remove the small screw that secures the fuel receiver assembly into the base of the weakening device, withdraw the assembly.
3. Unscrew the weakening device signal cap, collect the cap fibre washer. Unscrew the signal line adapter from the casting and withdraw the aluminium washer from the adapter.
4. Remove the circlip from the top of the fuel receiver chamber, withdraw the float chamber vent pipe (slight resistance may be felt due to the rubber sealing ring). With a soft drift (e.g. wooden pencil), push the float chamber vent valve out of the weakening device assembly (the drift is required because the rubber sealing ring fitted around the vent valve will cause a small resistance).
5. Remove the circlip from the base of the venturi chamber, withdraw the **air intake pipe** containing a one-way valve (slight resistance may be felt due to the rubber sealing ring).
6. Remove the **anti-tamper cover** from the top of the venturi chamber, unscrew the lock-nut and using a screwdriver unscrew the **adjusting screw.**

Weakening device - To assemble
To assemble the weakening device, reverse the procedure given for removal, noting the following.
1. Ensure that all components are clean before assembly.
2. Ensure that the rubber sealing rings are in a good condition and lightly smeared with the minimum amount of grease. Ensure that no grease is applied to the valves otherwise a malfunction may occur due to the grease making the valves stick.
3. After assembly, the operator should check that he can blow but not suck on the metal pipes, one on top of the fuel receiver chamber and the other at the bottom of the venturi chamber.

Weakening device signal strength - To check
The **float chamber depression** should be checked as follows.
1. Start and run the engine until normal setting conditions are attained (i.e. engine cooling system thermostat opened, air conditioning unit switched off and the automatic choke is off).
2. Stop the engine.
3. Connect an electric impulse tachometer to the engine in accordance with the manufacturer's instructions.
4. Disconnect the E.G.R. cut-off solenoid to carburetter signal pipe hose at the solenoid and blank off the hose.
5. Unscrew and remove the weakening device signal cap and connect a 0 to 15,5 cm. (0 to 6 in.) water manometer to the weakening device adapter.
6. Start and run the engine at 2 000 r.p.m. in 'Park' until a steady manometer reading is obtained, this should be 5,08 cm. (2.0 in.) of water depression.

A low or zero reading may be caused by
a. A blockage in the weakening device venturi to the weakening device cut-off solenoid.
b. A blockage or restriction in the signal pipe(s).
c. An air leak in the hoses or pipes from the float chambers to the emission control canister.
d. Faulty float chamber vent valve or drain valve.
e. Low engine temperature below 14°C. (57°F.) a faulty weakening device solenoid or weakening device switch.

A high reading may be caused by
a. An obstruction in the weakening device bleed orifice (weakening device signal strength adjusting screw).
b. Obstructed weakening device air filter or evaporation loss control canister.
c. Incorrect connection or blockage in the weakening device to either the valance connection or the evaporation loss control canister.
d. Weakening device air intake valve sticking closed.
e. Obstructed weakening device air filter hose.
f. Incorrect operation of anti 'run-on' solenoid.
7. If the float chamber depression is still incorrect after checking through the possible causes in Operation 6, set the weakening device signal strength (float chamber depression) by unlocking and turning the adjusting screw (see Fig. U24) until the correct manometer reading is obtained. Turning the adjusting screw clockwise increases the depression.
8. Remove the blank from the E.G.R. cut-off solenoid to signal pipe hose and connect the hose to the solenoid.

Printed in England
© Rolls-Royce Motors Limited 1977
January 1977
T.S.D. 4200 (Australia)

9. Raise the engine speed slowly noting both the manometer and tachometer readings. The maximum steady manometer reading should be obtained between 1 200 r.p.m. and 1 500 r.p.m.
10. Allow the engine speed to return to the idle setting (650 r.p.m.) and check the float chamber depression reading on the manometer.
If the float chamber depression at idle speed is above 10.16 mm. H_2O (0.4 in. H_2O) check the ignition timing at idle as this condition may result in unsatisfactory driveability.
11. Fit the tamperproof cover into the top of the venturi chamber.

Weakening device air filter - To remove
The air filter container is mounted on the left-hand valance just forward of the road spring pot (see Fig. U15).

This is a sealed unit and no attempt should be made to clean the element.
1. To remove the air filter assembly, detach the hose and unscrew the worm drive clip situated around the assembly.
2. Withdraw the assembly.

Weakening device air filter - To fit
Fit the air filter container by reversing the procedure given for removal.

Section U4

Crankcase emission control system

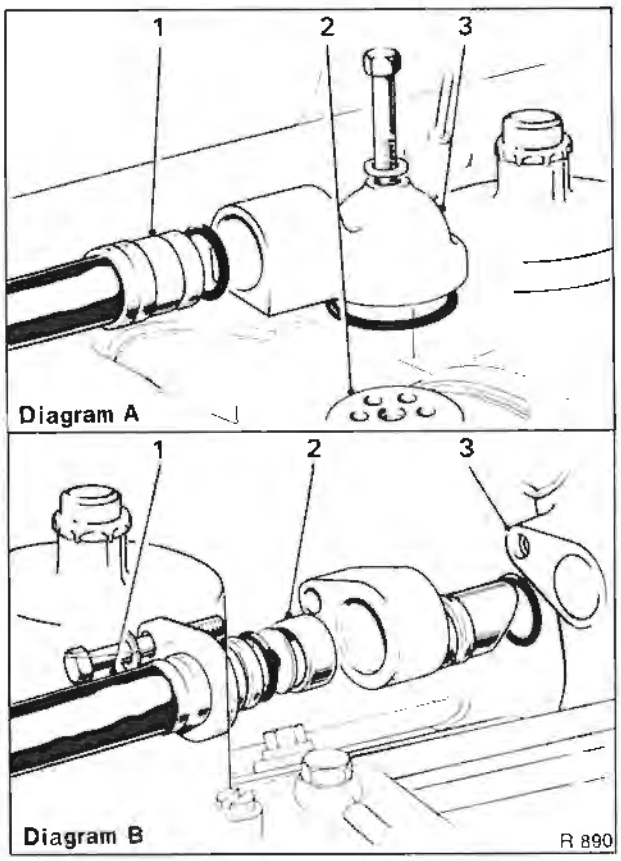

Fig. U25 Crankcase breather pipe connections

Diagram A		Diagram B	
1	Breather tube	1	Breather tube
2	Choke housing	2	Flame trap
3	Breather connection	3	Oil filler housing

Crankcase emissions are controlled by a recirculatory closed breather system.

An insulated draught tube connects the crankcase via the oil filler which is fitted with a sealed cap, to the choke housing upstream of both the choke butterfly and the carburetters. A flame trap capsule containing three wire mesh discs is fitted in a housing at the crankcase end of the draught tube. Engine emission (blow-by) is drawn into the induction system via the draught tube, due to the depression in the choke housing.

1. The flame trap fitted to the breather pipe should be cleaned in the following manner, at the specified mileage.
2. Unscrew the setscrew securing the breather pipe connection to the oil filler pedestal; withdraw the connection from the pedestal (slight resistance may be felt due to the rubber 'O' ring connections).
3. Withdraw the connection from the pipe flange and collect the restrictor.
4. Wash the flame trap assembly in clean petrol, then dry with a high pressure air line. The flame trap assembly consists of 3 gauzes crimped together as shown in Figure U25.
5. To clean the adapter fitted to the choke housing, remove the single setscrew from the breather pipe end connection and detach the pipe.
6. Clean the adapter fitted to the choke housing and ensure that the holes in the adapter are clear.
7. Assembly of the flame trap and breather pipe is in the reverse order, ensuring that the 'O' rings are in good condition.

Printed in England
© Rolls-Royce Motors Limited 1977

January 1977
T.S.D. 4200
(Australia)

Section U5

Carburetters and Automatic choke system

The Carburetter and Automatic Choke System can be seen illustrated in Figure U26 and comprises the following main components.

Automatic choke
'Fast-idle'
Stove pipe
(For the remainder of the Automatic Choke System refer to Chapter K).

Carburetters (see Fig. U28)
Bi-metal jet lever
Carburetter fuel filter
Carburetter idle airflow balance
Float
Float chamber
Float needle
Jet assembly
Jet needle
Overrun valve
Piston
Piston damper
Piston damper retainer (Piston ball race clip)
Suction chamber
Tamperproof caps
Throttle disc
Throttle linkage
Viscosity compensator

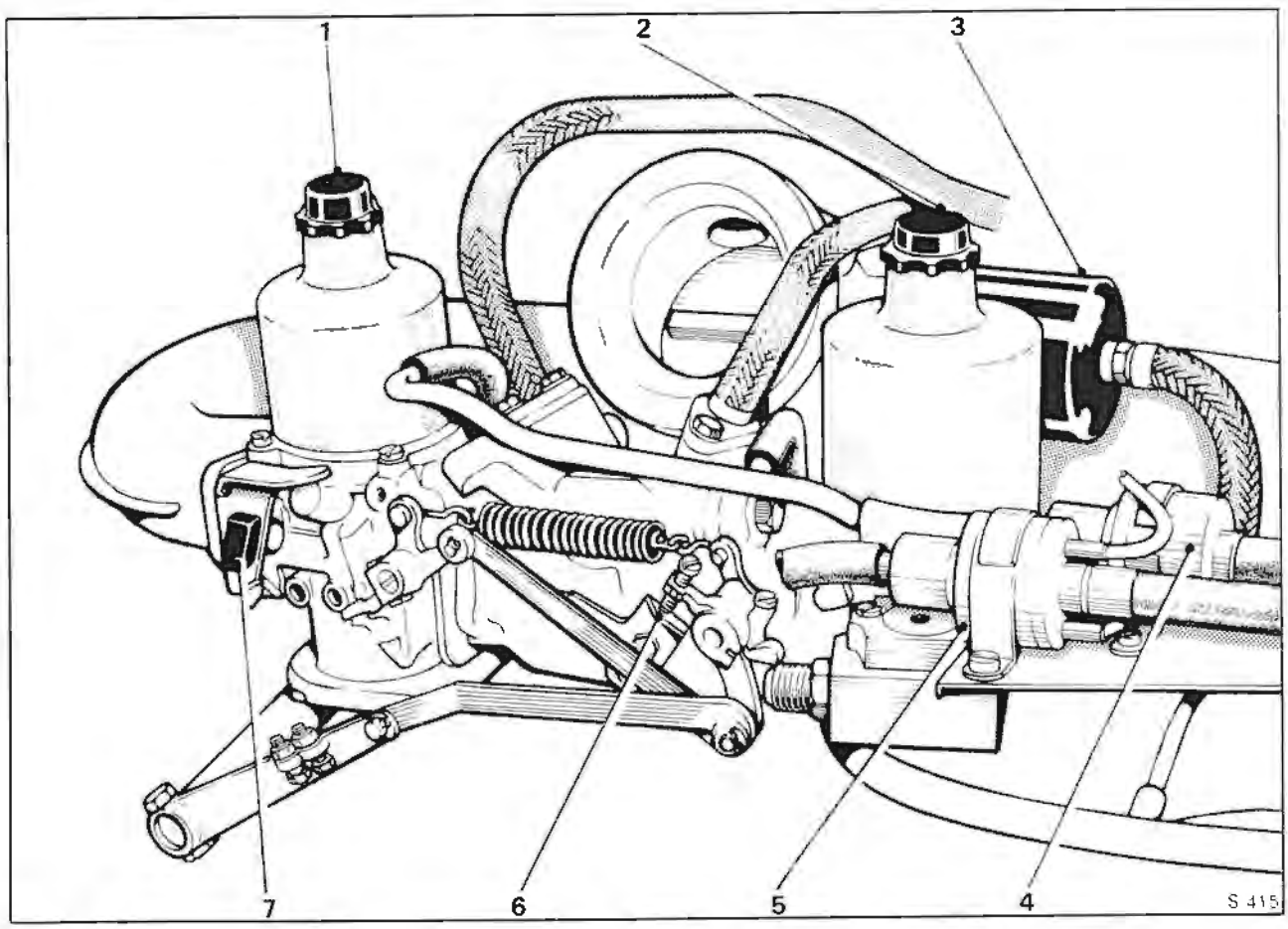

Fig. U26 Carburetters and linkage

1 'A' bank carburetter
2 'B' bank carburetter
3 Choke bi-metal housing
4 Weakening system cut-off solenoid
5 Anti 'run-on' solenoid
6 Idle speed adjusting screw
7 E.G.R. full throttle cut-out micro-switch

Printed in England

© Rolls-Royce Motors Limited 1977

January 1977

S.D. 4200
Australia)

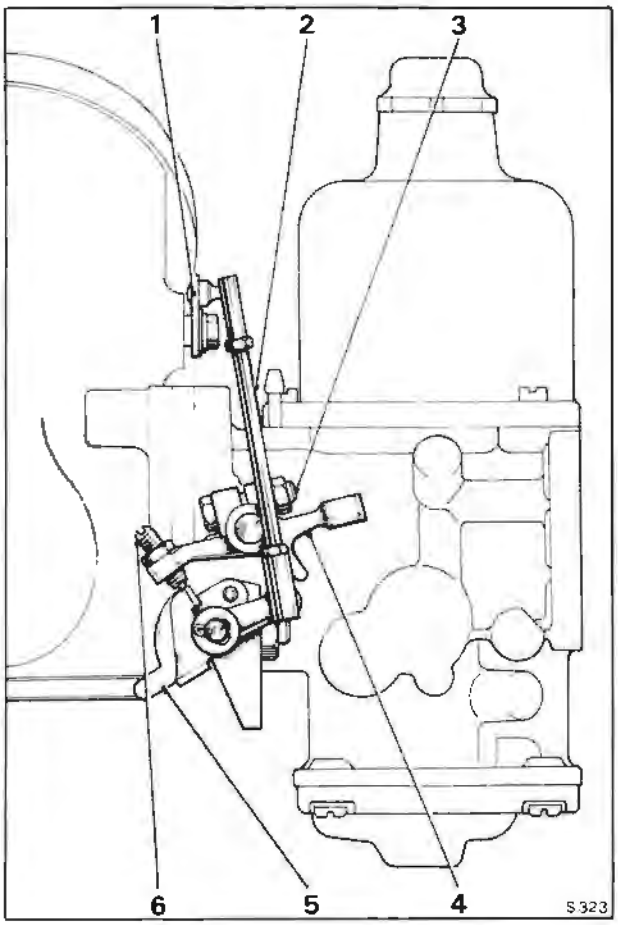

Fig. U27 Fast-idle mechanism
1 Control rod lever
2 Butterfly rod
3 Lever clamp bolt
4 'Fast-idle' lever
5 Cam
6 Adjusting screw

Temperature controlled air intake
Air cleaner/silencer
Air blend valve
Cold air intake
Hot air scoop
Manifold vacuum hose
Resonator
Temperature sensor

Weakening device
(Refer to Section U3).

Automatic choke
All details for the Automatic Choke System are given in Chapter K, except for the checking and setting procedures of the following.

'Fast-idle' - To set
1. Ensure that the usual safety precautions are carried out (i.e. parking brake firmly applied, gear range selector lever in 'Park' etc.) and connect an impulse tachometer in accordance with the manufacturer's instructions.
2. Disconnect the signal hose to the E.G.R. cut-off solenoid (not the hose from the solenoid to the E.G.R. valve), at the solenoid and blank the hose.
3. Remove the pressure tapping cap from the weakening device (see Fig. U24).
4. Open the throttles and close the choke butterfly against the bi-metal tension using control rod lever (item 1 - Fig. U27) until the adjusting screw (item 6 - Fig. U27) is resting on the tip of the fast-idle cam. At this point an extra load will be felt due to the action of the extended fast-idle plunger coasing.
5. Start the engine, if the speed is outside a range of 850 r.p.m. to 900 r.p.m. stop the engine, open the throttles to gain access to the adjusting screw and turn the screw approximately ⅛ turn for each 20 r.p.m. required. Tighten the lock-nut.
6. Start the engine and again check the fast-idle speed.
7. When the engine speed has been adjusted to within the prescribed limits open the throttles to release the fast-idle mechanism.
8. Stop the engine, disconnect the tachometer, remove the blank from the E.G.R. signal hose to the cut-off solenoid and fit the hose to the solenoid. Fit the pressure tapping cap to the weakening device.

Choke stove pipe - To flow check
1. Ensure that the usual safety precautions are carried out (i.e. parking brake firmly applied, gear range selector lever in 'Park' etc.) and connect an impulse tachometer in accordance with the manufacturer's instructions.
2. Start and run the engine until normal operating temperature is attained. Stop the engine.
3. Disconnect the stove pipe union at the intake elbow (see Fig. U42) and connect a flowmeter to the pipe via a connector (RH 8945). The flowmeter must be a rotameter type capable of measuring 2,9 cu.m/hr. (100 cu.ft/hr.).
4. Start and run the engine at idle speed (650 r.p.m.); observe the flowmeter, a correct reading is between 1,41 cu.m/hr. and 1,55 cu.m/hr. (50 cu.ft/hr. and 55 cu.ft/hr.)
5. If the flow is less than 1,41 cu.m/hr. (50 cu.ft/hr.) check the choke stove pipe unions for leaks.
6. If the flow is in excess of 1,55 cu.m/hr. (55 cu.ft/hr.), fit a new restrictor in the choke bi-metal housing (see Chapter K).

Carburetters
Two S.U. HIF7 (Horizontal Integral Float Chamber) carburetters with 4,76 cm. (1.875 in.) choke bores (see Fig. U28) are fitted to the engine on a central 'tee' piece which is mounted over an eight branch induction manifold.

This type of carburetter automatically adjusts both its choke and jet area to meet the demand of the engine which is dependent on engine speed and

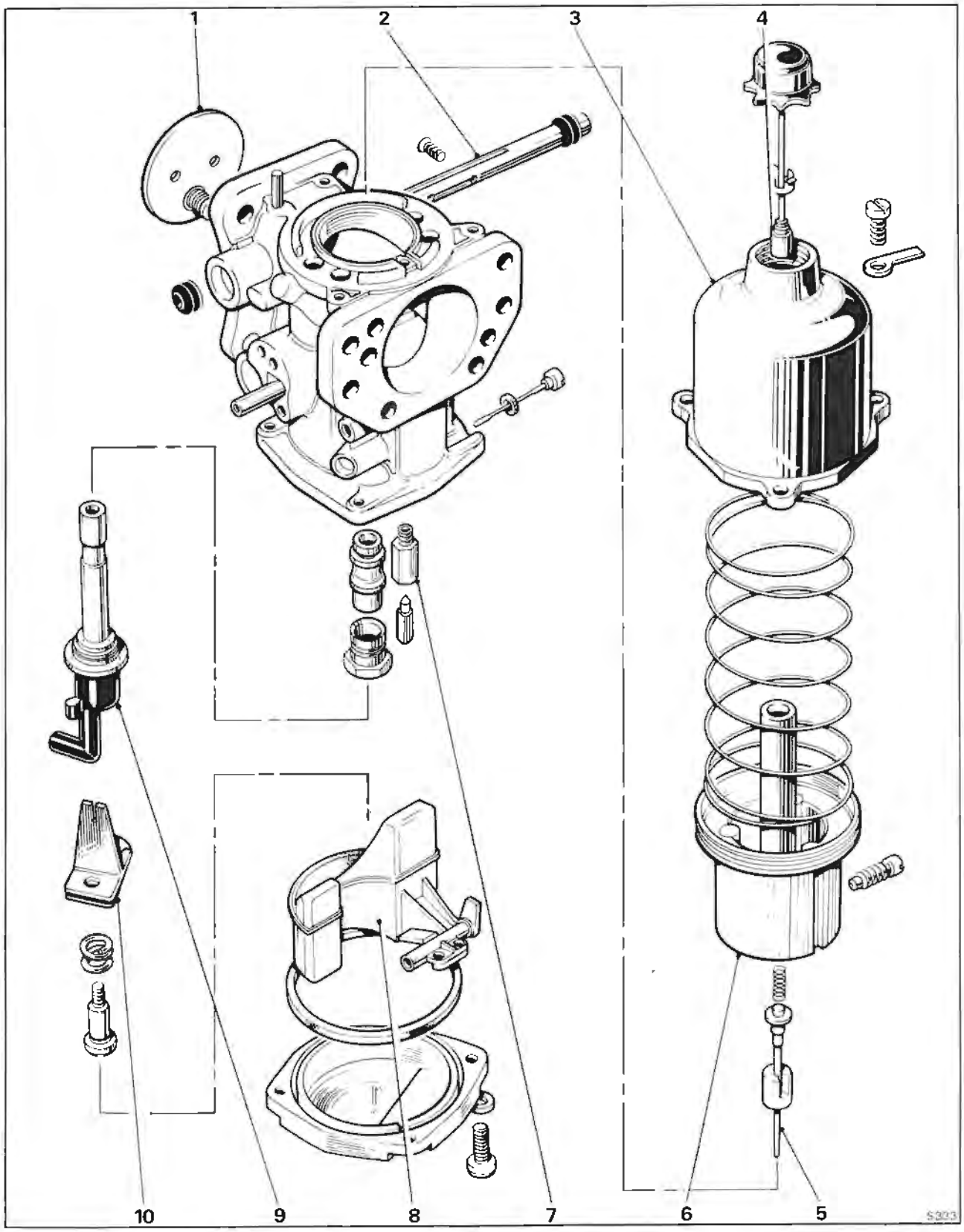

Fig. U28 SU HIF7 carburetter

1 Throttle disc with overrun valve
2 Throttle spindle
3 Suction chamber
4 Piston damper
5 Jet needle
6 Piston
7 Float needle valve assembly
8 Float
9 Jet assembly
10 Bi-metal jet lever

Printed in England
© Rolls-Royce Motors Limited 1977
January 1977
T.S.D. 4200
(Australia)

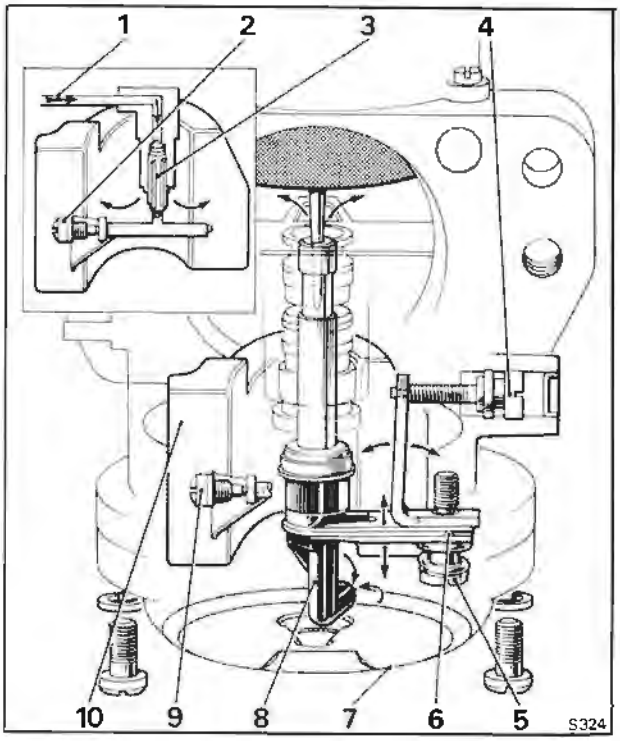

Fig. U29 Float chamber layout

1 Fuel inlet
2 Float fulcrum screw
3 Needle valve
4 Jet adjusting screw
5 Bi-metal pivot screw
6 Bi-metal assembly
7 Bottom cover-plate
8 Jet head
9 Float fulcrum screw
10 Concentric float

loading. As air is drawn through the carburetter, the piston acting as an obstruction will cause a depression to be formed in the area between the throttle and the piston. This depression is communicated by means of transfer holes in the base of the piston to the area above the piston, causing an upward force to be imposed on the piston. The piston will rise in response to this force relieving the depression in the area between the piston and the throttle as it does so until a point is reached where the force acting on the piston is balanced by the weight of the piston and the load exerted by the piston spring.

A spring-loaded jet needle is fitted to the carburetters, which is biased downstream and operates in a 2,54 mm. (0,10 in.) diameter main jet; this jet does not require centralising.

Float chamber (see Fig. U29)

The float chamber is incorporated in the main body casting; access to the chamber is obtained by removing the bottom cover-plate (item 7). The moulded float (item 10) is shaped so that it surrounds the jet tube and is pivoted along a line parallel to the inlet flange. The float is retained by a spindle (items 2 and 9) which screws into the body casting.

Entry of the fuel into the float chamber is via a brass tube (item 1) in the side of the carburetter body to a needle valve assembly (item 3).

The jet is pressed into the top of an aluminium tube which is in turn pressed into a plastic moulding (item 8). This hollow moulding known as the jet head is open at its lower end allowing fuel to enter the jet tube.

Mixture adjustment (see Fig. U29)

The jet tube of the HIF type carburetter is moved in the vertical plane to provide mixture adjustment.

The jet adjustment assembly is comprised of a right-angled adjusting lever of unequal length arms riveted to a bi-metal blade (item 6).

The blade is cut out to accept the jet head (item 8) and the shape of the jet head is formed so that any movement of the bi-metal blade is transmitted to the jet head, moving it in the vertical plane.

The right-angled adjusting lever and bi-metal blade (item 6) are attached to the body casting by a spring-loaded retaining screw (item 5) positioned in the short arm of the lever. This attachment allows the adjusting lever to be pivoted at the outer edge of its short arm and is loaded by the spring towards the jet adjusting screw (item 4).

The jet adjusting screw is located at the outer end of the long arm of the adjusting lever; screwing the adjusting screw inward will lower the jet, enriching the mixture and unscrewing the adjusting screw will allow the spring to return the lever together with the jet, weakening the mixture.

After the mixture has been set the jet adjustment can be sealed by fitting a plug into the jet adjusting screw recess of the carburetter body.

HIF7 carburetters are set and balanced by accurate flow measuring techniques during manufacture and therefore, adjustment of the mixture screws should not be necessary.

Fuel temperature compensation (Viscosity compensator) (see Fig. U29)

This device alters the jet position in relation to the metering needle to compensate for changes in fuel viscosity which take place with changes in fuel temperature.

When the fuel temperature rises, the viscosity is lowered, and in an uncompensated assembly this would allow more fuel to flow for a given jet/needle relationship.

In the HIF jet assembly the jet head is attached to a bi-metal blade (item 6). This bi-metal is immersed in the fuel in the float chamber and will move in the vertical plane in response to changes in fuel temperature. The jet will be raised to a weaker position on the jet needle when the fuel

temperature rises and will be lowered to a richer position when the temperature falls.

From this it will be seen that once the jet position has been selected by adjusting the mixture screw, alterations of fuel temperature will bring about slight alterations in jet position to compensate for the change in fuel viscosity.

The effect of this device is that drivability is improved over wide ranges of temperature, and that exhaust emissions can be kept within closer limits during cold starting and the warm-up period. Temperature compensation also allows carburetters to have the mixture setting pre-set and sealed before the car is delivered.

Overrun valves (see Fig. U30)

During overrun (i.e. when decelerating with the throttles closed), insufficient mixture is supplied to the engine to maintain satisfactory combustion. The overrun valves alleviate this condition by allowing some mixture to pass through the throttle plates (butterflies) at high inlet manifold depressions.

An overrun valve is fitted into the throttle plate of each carburetter.

An overrun valve consists of a small disc retained in each throttle plate by a spring loaded plunger. Under normal conditions the disc is seated against the throttle plate. When the throttle is suddenly closed, the increased inlet manifold depression lifts the disc from its seating and allows a metered quantity of air/fuel mixture to pass through the throttle plate.

The action of the overrun valves maintains satisfactory combustion on overrun, thus reducing hydrocarbon emissions.

After the sudden closure of the throttles and as soon as the manifold depression falls, the overrun valve disc returns to its seat on the throttle plate.

Spring-loaded jet needle (see Fig. U31)

The jet needle fitted to each carburetter is biased towards a predetermined position in the jet orifice by means of a spring-loaded fixing.

The shoulder of the needle abuts a protrusion formed on the needle guide. Under the pressure of a spring the needle is held permanently in one position relative to the air flow. As the needle is retained in a predetermined position no jet centring is required and a non-centreable jet bearing is fitted. To ensure correct fitting the needle guide carries an etched alignment mark which should be positioned mid-way between the two cut-outs in the piston.

Carburetter fuel filter

A filter element is fitted into the fuel filter housing attached to the side of each carburetter. At the intervals specified in the Service Schedules these two filter elements should be discarded and new ones fitted as described in Chapter K.

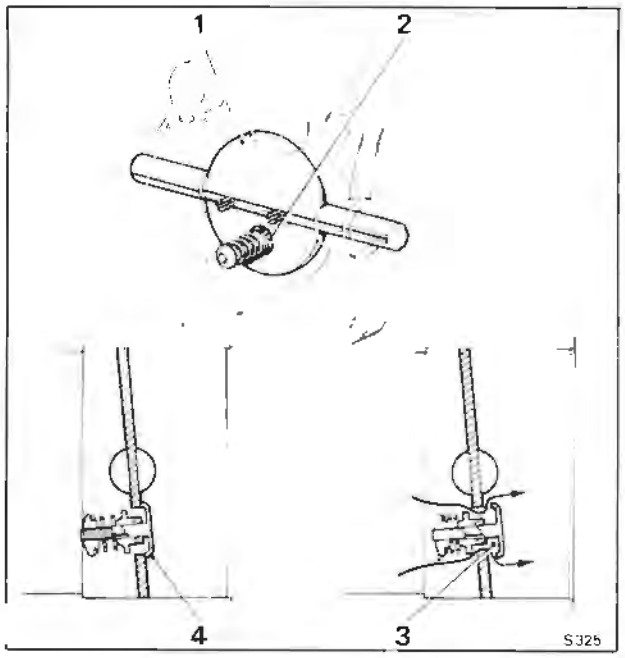

Fig. U30 Overrun valve

1 Throttle butterfly disc
2 Overrun valve
3 Overrun valve open
4 Overrun valve closed

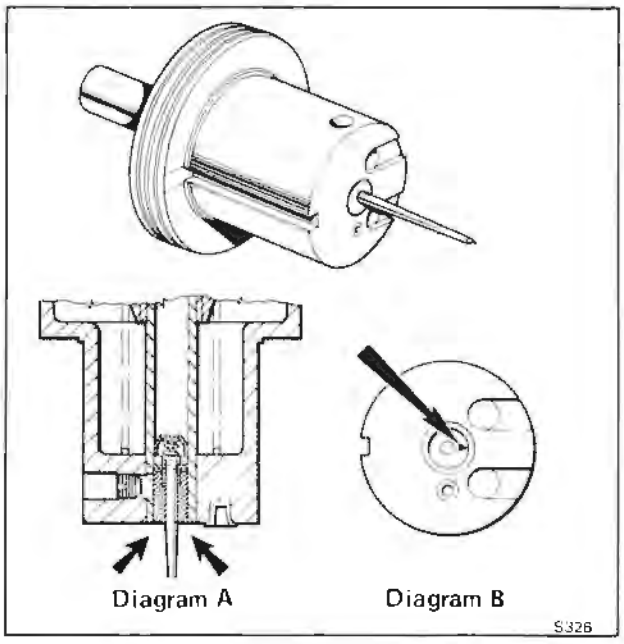

Fig. U31 Spring-loaded jet needle

Diagram A
Needle guide height setting
Diagram B
Needle guide alignment setting

Printed in England
© Rolls-Royce Motors Limited 1977
January 1977
T.S.D. 4200 (Australia)

Carburetters and air horns assembly - To remove
Before commencing to remove the carburetters observe the following points.
1. When disconnecting the various hoses, pipes and wiring connections ensure that they are suitably labelled to assist identification when assembling.
2. Ensure that all open ends of pipes, hoses, etc. are suitably blanked off to prevent the ingress of dirt, etc.
3. Ensure that the usual safety precautions are carried out (i.e. parking brake firmly applied, gear range selector lever in Park, battery disconnected, etc.).

To remove the carburetter and air horn assembly proceed as follows
From 'A' bank side
1. Remove the air intake elbow casting (refer to Air intake - To remove in Chapter K).
2. Disconnect the fuel feed pipe fitted adjacent to 'A' bank carburetter.
3. Withdraw the 'Lucar' electrical connections from the E.G.R. full throttle cut-out micro-switch.
4. Withdraw the 'Lucar' electrical connections from the speed control unit. Disconnect the chain link from the throttle linkage to the speed control unit. Withdraw the vacuum hose from the speed control unit. Unscrew and remove the 'steady' bolt from the speed control bracket.
5. Remove the split pin, washer and clevis pin from the throttle linkage just forward of 'A' bank carburetter.

From 'B' bank side
6. Disconnect the E.G.R. feed pipe upper joint (refer to E.G.R. feed pipe - To remove, Section U2).
7. Unscrew the union on the choke stove pipe at the bi-metal housing.
8. Unscrew the fuel feed pipe union at 'B' bank carburetter filter housing.
9. Remove the crankcase emission control system pipe from the choke butterfly housing; withdraw the housing from the end of the pipe.
10. Disconnect the electrical cables to the choke solenoid at the 'snap connector' joints, adjacent to the butterfly housing.
11. Disconnect the 'Lucar' electrical connections to the anti run-on solenoid, E.G.R. cut-off solenoid and the weakening device cut-off solenoid.
12. Detach the following hoses from the weakening device.
a. the hose from the float chamber vent valve
b. the hose from the fuel receiver
c. the hose to the air filter
d. the hose from the venturi chamber
These hoses are labelled A, H, G and D in Figure U4.
13. Disconnect the purge line at the restrictor.
14. Unscrew the 7/16 in. A/F nut from the dipstick bracket; collect the washer.
15. Unscrew the ½ in. A/F setscrew from the centre of the carburetter 'tee' piece; withdraw the setscrew and washer.
16. Carefully withdraw the carburetters and air horn assembly, ensuring that no pipes, hoses or electrical items are still connected.

Carburetters and air horns assembly - To fit
Fit the carburetters by reversing the procedure given for their removal, noting the following points.
1. Ensure that all joint faces are clean.
2. Fit new gaskets.

Carburetters - To remove
Remove the carburetters and air horn assembly from the car (refer to Carburetters and air assembly - To remove) and then, remove the carburetters from the air horns assembly as follows.

'A' bank carburetter
1. Unscrew the two ½ in. A/F nuts securing the air horn to 'A' bank carburetter.
2. Withdraw the bolts, collect the washers and the E.G.R. full throttle cut-out micro-switch mounting bracket.
3. Move the air horn flange upwards away from the carburetter.
4. Unscrew the union from the fuel filter.
5. Detach the vacuum supply hose from on top of the carburetter body adjacent to the carburetter and 'tee' piece flange.
6. Detach the hose from the side of the carburetter that connects to the fuel receiver in the weakening device.
7. Completely remove the two pinch bolts securing the throttle levers to the 'A' and 'B' bank carburetter butterfly spindles, remove the levers.
8. Unscrew the nut and withdraw the pinch bolt securing the 'fast-idle' lever to the carburetter spindle; withdraw the lever.
9. Unscrew the four half-nuts that retain the carburetter to the 'tee' piece flange; collect the washers.
10. Withdraw the carburetter and collect the gasket.

'B' bank carburetter
1. With a screwdriver, unscrew and remove the two screws securing the solenoid platform in position adjacent to 'B' bank carburetter. One screw is located on the air horn and has a nut underneath, and the other screw is situated in the filter housing.
2. Unscrew the ½ in. A/F nuts from the bolts that retain the air horn to the carburetter flange; withdraw the bolts and collect the washers. Move the solenoid platform away from the carburetter.
3. Detach the hose from the side of the carburetter to the fuel receiver in the weakening device.
4. Carefully ease the air horn upwards away from the carburetter.

5. Completely remove the two pinch bolts securing the throttle levers to the 'A' and 'B' bank carburetter butterfly spindles remove the levers.
6. Detach the vacuum supply hose from on top of the carburetter body adjacent to the carburetter and 'tee' piece flange.
7. Unscrew the remaining union from the fuel filter housing.
8. Unscrew the four half-nuts that retain the carburetter to the 'tee' piece flange; collect the washers.
9. Withdraw the carburetter and collect the gasket.

Dismantling of the components within the carburetters is not recommended as all carburetters are set and balanced by accurate flow measuring techniques during manufacture.

In certain isolated instances however, it maybe necessary to dismantle the carburetters and under these conditions the following procedure should be carefully followed.

Carburetter - To dismantle
Upper half (see Fig. U32)
1. Thoroughly clean the outside of the carburetter.
2. Unscrew the suction chamber retaining screws and remove the identity tag.
3. Lift the chamber assembly vertically from the body without tilting it.
4. Hold the piston firmly and pull the suction chamber, taking care not to bend the damper rod, until the damper retainer is freed from the piston rod. Unscrew and remove the damper.
5. Remove the piston spring, lift out the piston assembly and empty the oil from the piston rod.
6. Note the position of the needle guide etch mark in relation to the piston transfer holes for correct reassembly and unscrew the needle guide locking screw.
7. Withdraw the needle, guide and spring.

Lower half (see Fig. U33)
8. Mark the bottom cover-plate and body to ensure correct reassembly, unscrew the retaining screws and remove the cover complete with the sealing ring.
9. Remove the jet adjusting screw complete with 'O' ring.
10. Remove the jet adjusting lever retaining screw and spring.
11. Withdraw the jet complete with adjusting lever and disengage the lever.
12. Remove the float pivot spindle and aluminium washer.
13. Withdraw the float.
14. Remove the needle valve and unscrew the valve seat.
15. Unscrew the jet bearing locking nut and withdraw the bearing complete with fibre washer.

Throttle disc assembly (see Fig. U34)
16. Remove the throttle disc retaining screws.
17. Close the throttle and mark the position of the throttle disc in relation to the carburetter flange. **Do not mark the disc in the vicinity of the overrun valve.** Open the throttle and carefully withdraw the disc from the throttle spindle taking care not to damage the overrun valve.
18. Withdraw the throttle spindle and remove the seals, noting the way it is fitted in relation to the carburetter body to ensure correct reassembly.

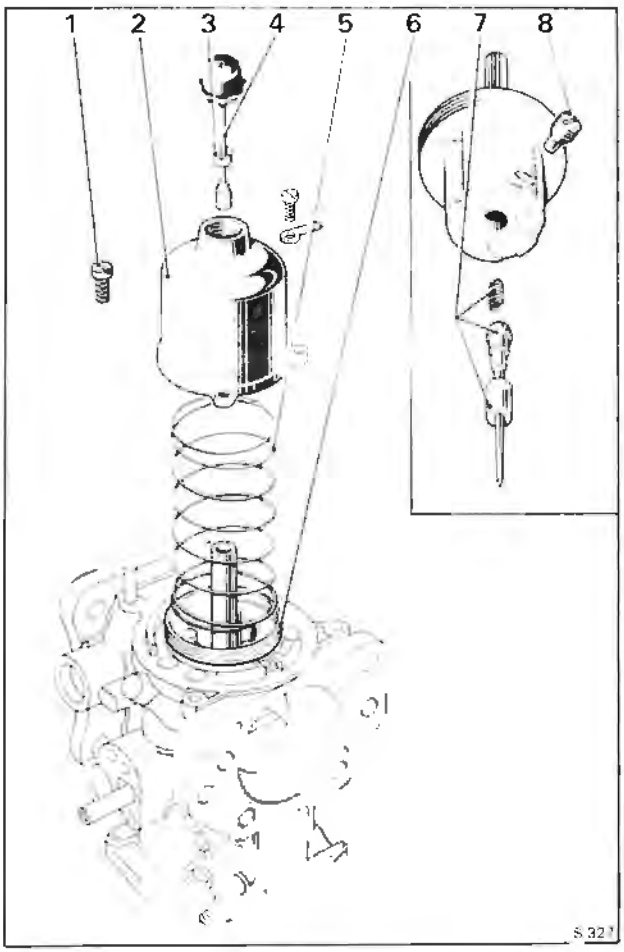

Fig. U32 Dismantling a carburetter (Upper half)
1 Suction chamber retaining screw
2 Suction chamber
3 Damper retainer (Piston ball race clip)
4 Damper rod
5 Spring
6 Piston
7 Spring-loaded needle assembly
8 Needle guide locking screw

Printed in England
© Rolls-Royce Motors Limited 1977
January 1977
P.S.D. 4200 Australia

Carburetter - To inspect

1. Examine the throttle spindle and its bearings in the carburetter body; check for excessive play, and fit new parts if necessary.
2. Examine the float needle and seating for damage and excessive wear; fit new parts if necessary.
3. Examine all rubber seals and 'O' rings for damage or deterioration; fit new parts if necessary. **The cover-plate sealing ring must be renewed.**

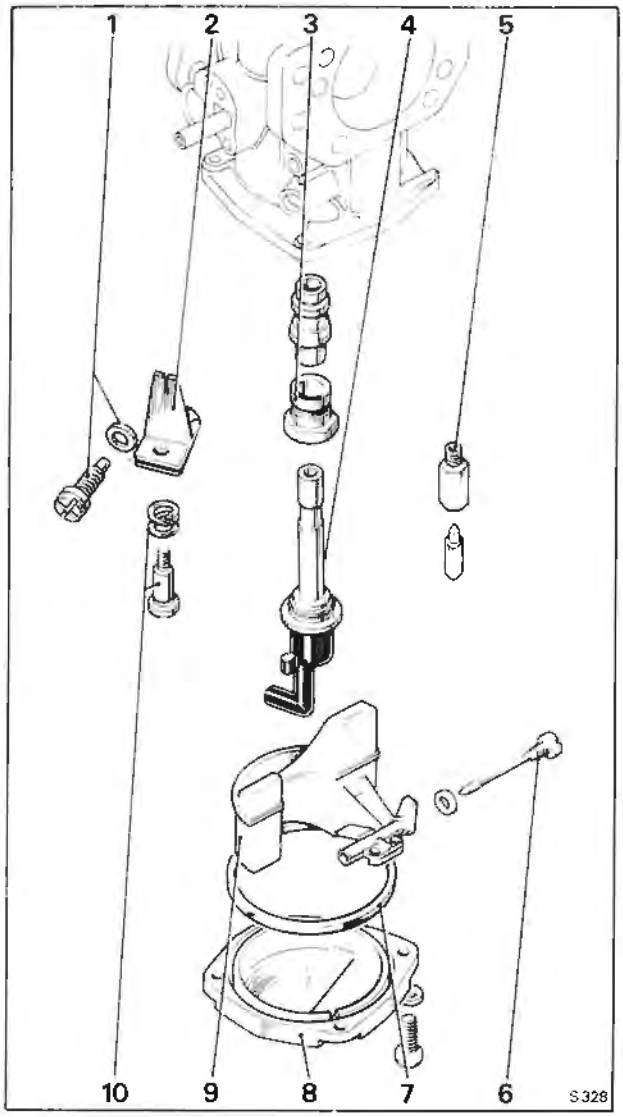

Fig. U33 Dismantling a carburetter (Lower half)

1 Jet adjusting screw and 'O' ring
2 Jet adjusting lever
3 Jet bearing assembly
4 Jet
5 Float chamber needle valve
6 Float pivot spindle
7 Sealing ring
8 Bottom cover plate
9 Float
10 Jet lever adjusting screw

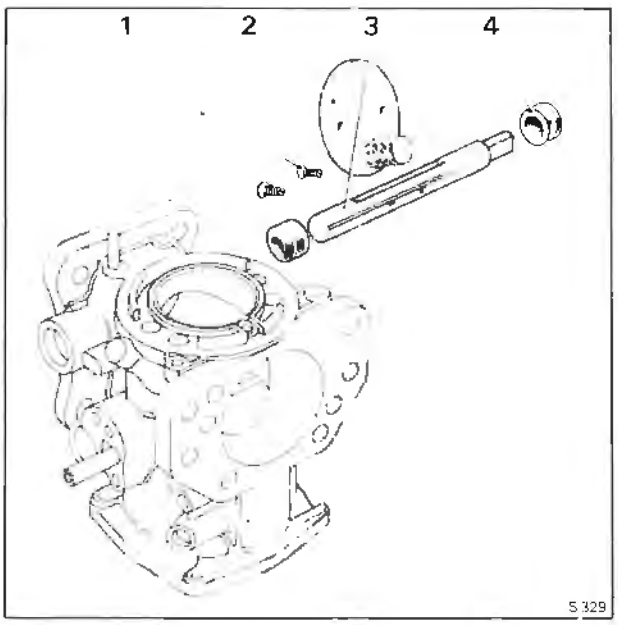

Fig. U34 Dismantling a carburetter (Throttle disc assembly)

1 Throttle disc retaining screws
2 Throttle disc assembly
3 Throttle spindle
4 Seal

4. Examine the carburetter body for cracks and damage and for security of the brass connections and the piston key.
5. Clean the inside of the suction chamber and piston rod guide with fuel or methylated spirit (denatured alcohol) and wipe dry. **Abrasives must not be used.**
6. Examine the suction chamber and piston for damage and signs of scoring.
7. Check that all the balls are in the piston ball race (2 rows, 6 per row). Fit the piston into the suction chamber, without the damper and spring, hold the assembly in a horizontal position and spin the piston. The piston should spin freely in the suction chamber without any tendency to stick.

Carburetter - To assemble

Assemble the carburetter by reversing the procedure given for removal, noting the following points.

1. Ensure that the throttle disc is fitted in its original position.
2. New throttle disc retaining screws must be used when refitting the disc. Ensure that the throttle disc is correctly positioned and closes correctly before tightening the retaining screws. Spread the split ends of the screws sufficiently to prevent turning.
3. Position the throttle spindle end seals just below the spindle housing flange.
4. When fitting the jet assembly to the adjusting lever ensure that the jet head moves freely in the bi-metal cut-out.

5. Fit a new float pivot spindle sealing washer or anneal the existing washer.

Check the level of the float in the float chamber (refer to Carburetter float level - To set).

6. Check that the small diameter of the jet adjusting screw engages the slot in the adjusting lever and set the jet 3,05 mm. (0.12 in.) below the bridge of the body.

7. Ensure that the needle guide etch mark aligns correctly with the piston transfer holes. After fitting the needle assembly, check that the shoulder of the guide aligns with the face of the piston (see Fig. U31).

8. To prevent the piston spring from being 'wound up' during reassembly, temporarily fit the piston and suction chamber, less the piston spring, to the body and pencil mark their relative positions to each other. Fit the spring to the piston, hold the suction chamber above the piston, align the pencil marks and lower the chamber over the spring and piston.

Before assembly ensure that the damper retainer (piston ball race clip) is refitted by pressing it fully into the piston rod (see Fig. U35).

The damper retainer (piston ball race clip) can also be installed with the suction chamber fitted to the engine by using fitting tool RH 9086.

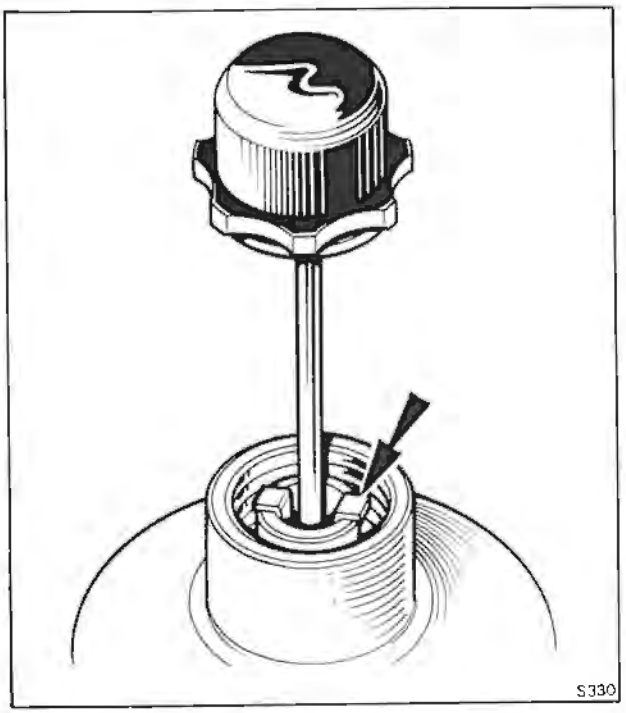

Fig. U35 Position of damper retainer

Carburetter float level - To set

1. Remove the carburetter from the engine.
2. Invert the carburetter.
3. Mark the bottom cover-plate and carburetter to ensure correct assembly, unscrew the retaining screws and remove the cover complete with the sealing ring.

A new rubber sealing ring must be installed when fitting the cover-plate.

4. Ensure that the float chamber needle valve is held in the closed position by the weight of the float only.
5. Check that the lowest point on the float (see Fig. U36) is either level with the float chamber face, or up to 1,52 mm. (0.060 in.) below.
6. If necessary, adjust the float position by carefully bending the brass pad.
7. Check that the float pivots correctly about the spindle.

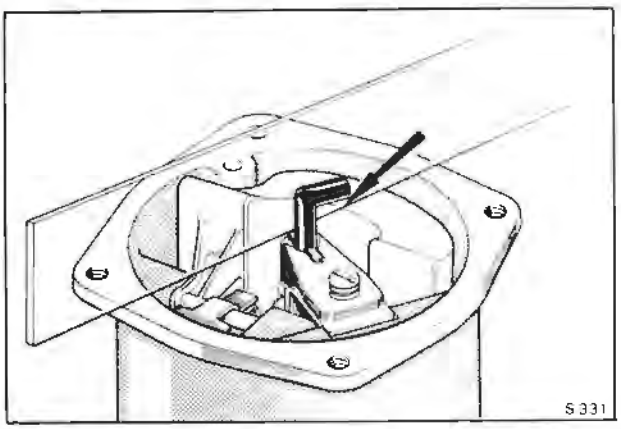

Fig. U36 Checking the float level

Carburetter air valve damper - To top-up

The upper portion of the guide spindle, attached to the air valve piston in each carburetter, is hollow and is filled with the same type of oil as used in the engine.

1. Unscrew the damper cap and carefully raise the damper until the damper, **together with the air valve piston,** reach the top of their travel. Ensure that the retainer is not displaced from its position in the piston rod (see Fig. U35).
2. Holding the damper and piston in the raised position; fill the recess in the damper retainer (piston ball race clip) with clean engine oil.
3. Lower the damper until the cap contacts the neck of the suction chamber, then carefully raise the damper and piston again and check the oil level; this is correct if the oil level is just visible in the bottom of the recess in the damper retainer (piston ball race clip). If the oil level is not visible, repeat the topping-up procedure until the oil level is correct.
4. Check that the damper retainer (piston ball race clip) is still in its correct position in the piston rod as shown in Figure U35, then lower the damper and screw the damper cap firmly into position.

Printed in England
© Rolls-Royce Motors Limited 1977
January 1977
T.S.D. 4200
(Australia)

If the damper retainer (piston ball race clip) becomes inadvertently displaced during the topping-up procedure or if the damper should be removed from the piston, do not fit the damper cap or run the engine until the retainer has been returned to its correct position in the piston rod. The special tool RH 9086 should be used to fit damper retainer (piston ball race clip).

Carburetter throttle linkage - To fit and set (see Fig. U37)

1. Assemble 'A' bank and 'B' bank throttle levers (items 6 and 11) onto the carburetter spindles.
2. Fit the setting jig (RH 8880) into position on the throttle levers.
3. Fully close 'B' bank carburetter butterfly (item 7).
4. Tighten the pinch bolt securing 'B' bank throttle lever.
5. Fully close 'A' bank carburetter butterfly (item 2).
6. Tighten the pinch bolt securing 'A' bank throttle lever.
7. Fit the throttle spring (item 3) to the throttle levers.
8. Remove the setting jig from the throttle levers.
9. Fit the cross link guide bracket (item 9) to the carburetter 'tee' piece (item 5). Secure in position with two small screws which should be 'locked' using two tabs washers.
10. Fit the cross link (item 10) and the eccentric throttle adjuster (item 4) onto the throttle levers, ensuring that both throttle butterflies are closed when adjusting and tightening the eccentric adjuster.

Note

The eccentric pin should be set in the lowest position possible.

11. Ensure that the cross link guide (item 9) has a clearance of between 1,27 mm. (0.050 in.) and 1,78 mm. (0.070 in.) with the cross link. If necessary bend the guide to give these clearances.
12. Check that the throttle linkage moves freely.
13. Fit the idle stop screw (item 8) and lock plate; adjust until the screw just contacts the stop bracket (item 9) with the throttle butterflies remaining in the closed throttle position.
14. Screw down the idle stop screw ½ turn.
15. Connect one end of the drive link (item 12) to the 'B' bank throttle lever and the other end, to the manifold shaft lever (item 13).
16. Operate the linkage to ensure free movement.
17. With the throttles in the closed position check that the 'A' bank control shaft to control rod lever (item 14) on the rear of the manifold shaft is in line with the front manifold shaft lever (item 13). Tighten the securing bolts on both levers.
18. Operate the mechanism; check for freedom of movement within the linkage and also clearance with the various engine components.
19. To set the remainder of the linkage from the control rod lever on the rear of the manifold shaft to the accelerator pedal refer to Chapter T - Transmission.

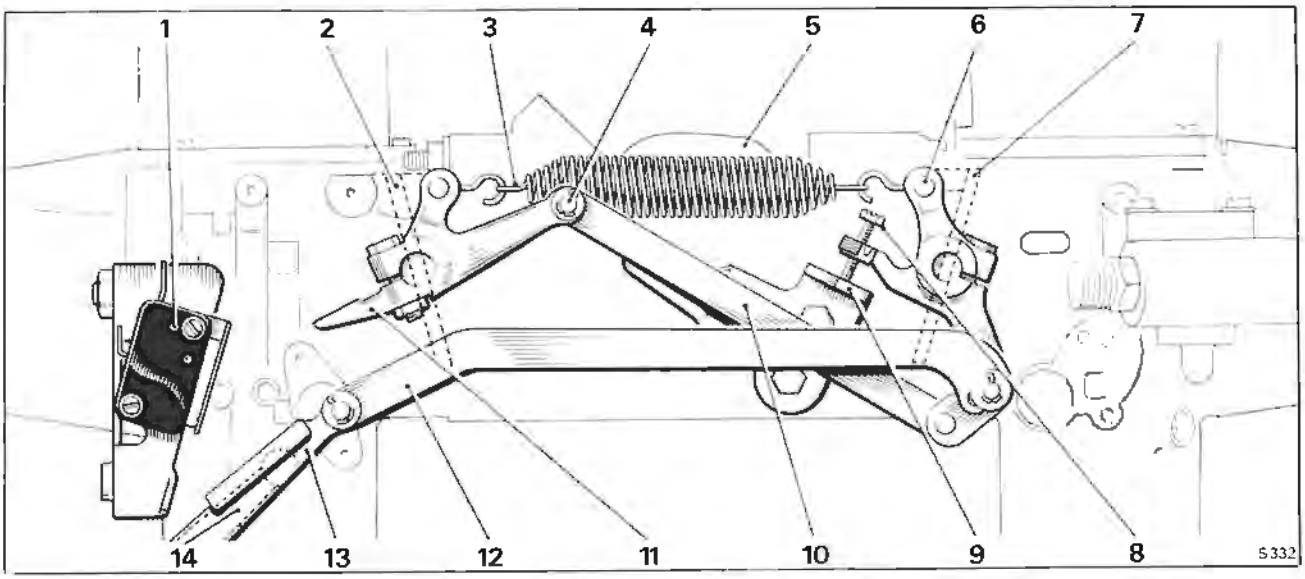

Fig. U37 Carburetter throttle linkage

1	E.G.R. full throttle cut-out micro-switch
2	'A' bank carburetter throttle butterfly
3	Throttle spring
4	Eccentric throttle adjuster
5	Carburetter 'tee' piece
6	'B' bank carburetter throttle lever
7	'B' bank carburetter throttle butterfly
8	Idle stop screw
9	Throttle cross link guide bracket
10	Cross link
11	'A' bank carburetter throttle lever
12	Drive link
13	Front manifold shaft lever
14	Rear manifold shaft lever

Printed in England
© Rolls-Royce Motors Limited 1977
January 1977
S.D. 4206
Australia

Carburetters - To set

The carburetters fitted to these cars are adjusted at the factory using **special equipment** to ensure that their settings comply with the current emission control regulations.

Under normal circumstances the carburetters should not require adjustment in service.

If however, adjustment is found necessary due to inadvertent disturbance or replacement of a component set the carburetters by carrying out the following operations in the sequence given.

a. Set throttle linkage and temporarily set engine idle speed. Check linkage clearances.
b. Set cold start fast-idle cam.
c. Tune carburetters.
d. Set cold start fast-idle speed.
e. Set the kick-down micro-switch.
f. Set full throttle stop and full throttle E.G.R. cut-off micro-switch.

Carburetter tuning

Preliminary checks

Before tuning the carburetters the following checks should be carried out.

Ensure that the vehicle is in 'Park', the parking brake firmly applied and that the gear range actuator thermal cut-off has been removed from the main fusebox.

1. Check the condition of the spark plugs.
2. Check the ignition timing.
3. Check the flow through the choke stove pipe.
4. Check the entire induction system for air leaks.
5. Check the purge line flow rate.
6. Ensure that the air conditioning system is switched off.
7. Start the engine and warm up; allow to run for at least 5 minutes after the thermostat has opened.
8. Stop the engine, ensure that the choke butterfly valve is fully open and the choke fast-idle off.
9. Connect an electric impulse tachometer in accordance with manufacturer's instructions.
10. Check the float chamber depression.
11. Check the exhaust gas recirculation system for correct operation.
12. Check and set the full throttle exhaust gas recirculation cut-out micro-switch.

Carburetter idle air balance

1. Ensure that the usual safety precautions are carried out (i.e. parking brake firmly applied, gear range selector lever in Park, etc.) and connect an impulse tachometer in accordance with the manufacturer's instructions.
2. Disconnect the speed control chain.
3. Start and run the engine until normal operating temperature is attained.
4. Stop the engine.
5. Fit the dial gauges RH 9105 with RH 8841 (kit to convert dial gauges to fit the HIF7 carburetters) to the carburetter dashpots in place of the dampers.
6. Zero the gauges with the engine stopped and lightly tighten the gauge clamp screws.
7. Start and run the engine at the idle speed setting (650 r.p.m.), adjust the carburetter piston lifts to be equal (within 10%) using the eccentric adjuster (see Fig. U37).
8. The average piston lift reading should now be between 2,03 mm. and 2,54 mm. (0.080 in. and 0.100 in.).

If the idle speed piston lift is over 2,54 mm. (0.100 in.) check the ignition timing at idle as this condition may result in unsatisfactory driveability.

9. Stop the engine and remove the impulse tachometer.
10. Remove the dial gauges and fit the carburetter dampers. **Ensure that the dashpot ball race clips (piston damper retainers) are fitted correctly and are pressed fully into the piston rod (see Fig. U35) using tool RH 9086.**
11. Connect the speed control chain and adjust to give a minimum slack condition, consistant with no impediment to the throttle lever to return to the idle speed position.

Carburetter mixture strength - To set

1. Ensure that the usual safety precautions are carried out (i.e. parking brake firmly applied, gear range selector lever in Park, etc.) and connect an impulse tachometer in accordance with the manufacturer's instructions.
2. Remove the air intake, blank off the hot idle compensator feed drilling (see Fig. U38) and replace the intake.

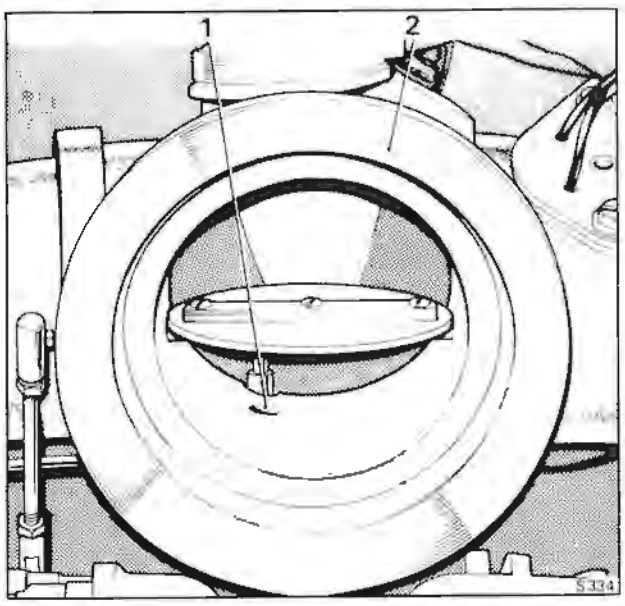

Fig. U38 Hot idle mixture compensator feed
1 Hot idle compensator feed
2 Air intake butterfly housing

3. Remove the air inlet hose from the air injection system pressure relief valve and fit a blank over the valve (a suitable blank may be produced from a short length of rubber hose with one end plugged).

Note
The air injection system is inoperative when the relief valve inlet air hose is disconnected from the air pump. The valve must be blanked to prevent air being drawn into the exhaust port by pulsations in the exhaust system since this would affect the idle CO reading.

4. Disconnect the E.G.R. cut-off solenoid to carburetter signal hose at the solenoid, blank off the hose.
5. Unscrew and remove the pressure tapping cap from the weakening device.
6. Ensure that the engine has run for at least 25 minutes after the thermostat has opened.
7. Purge the engine at 2 000 r.p.m. in Neutral for ¼ minute. Allow the engine speed to return to the idle setting and ensure that this is 650 r.p.m.; adjust if necessary using the idle stop screw.
8. Insert the probe of a CO meter into either exhaust system tailpipe and check the reading.

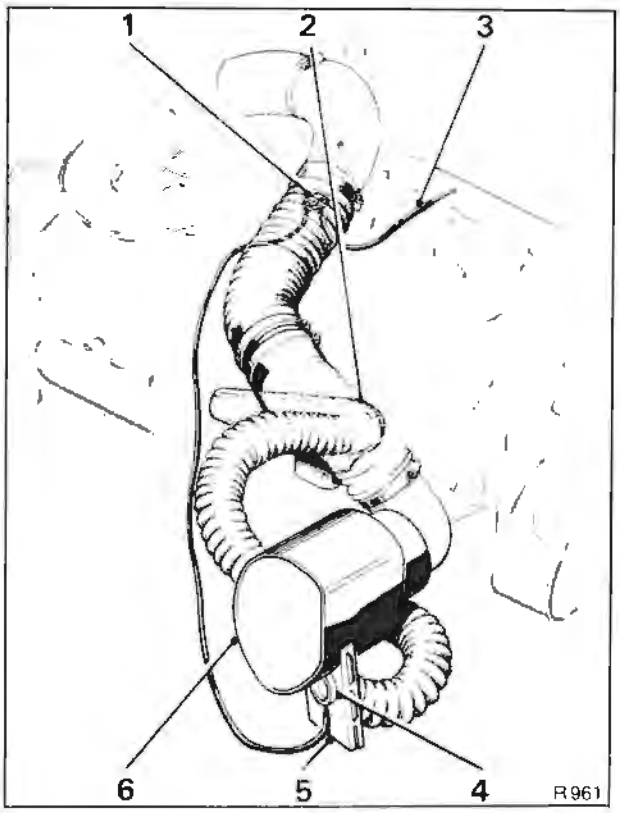

Fig. U39 Temperature controlled air intake
1 Temperature sensor
2 Hot air scoop
3 Manifold vacuum hose
4 Air blend valve
5 Cold air intake
6 Air cleaner/silencer

9. The CO meter reading should be 1% to 4%. If the reading is outside the limits quoted
a. Check for induction system leaks (if below 1%)
b. Check the choke stove and purge line flow rates.
10. If after carrying out Operation 8 the idle speed CO meter reading is still outside the limits quoted, the carburetter mixture screws (see Fig. U29) may be adjusted by equal amounts up to ½ turn in the same direction in order to achieve the mean limit of 2.5%. No attempt should be made to adjust the CO reading if it is in the region of 2.5% to 4.0%.

Note
a. Clockwise rotation of the mixture screws will richen the mixture.
b. The tuning operations should be carried out in the shortest possible time. If the time exceeds 3 minutes, run the engine at 2 000 r.p.m. in Neutral for ¼ minute and then resume the tuning operations. Repeat this purging operation if a further period of 3 minutes is exceeded.

After purging the system gently tap all around the neck of the carburetter suction chamber with a lightweight non-metallic object (i.e. the wooden handle of a small screwdriver), to eliminate carburetter piston hysteresis.

11. Stop the engine.
12. Fit the pressure tapping cap to the weakening device, fit a new sealing washer if necessary.
13. Remove the blank from the air pressure relief valve and connect the feed hose from the air pump to the relief valve.
14. Remove the blank from the E.G.R. cut-off solenoid to carburetter signal hose and connect the hose to the E.G.R. cut-off solenoid.
15. Start the engine and check the idle speed, this should be 650 r.p.m.; adjust by means of the idle stop screw (refer to Section U6).
16. Stop the engine, remove the air intake and discard the blank from the hot idle compensator feed drilling, fit the air intake.
17. Remove the impulse tachometer.

Carburetter tamperproofing
Both carburetter mixture screws **must** have tamper-proof caps fitted upon completion of the setting operation.

Special tools have been designed and produced for the fitting of the tamperproof caps as follows.
'A' bank carburetter mixture screw cap - RH 9096
'B' bank carburetter mixture screw cap - RH 9097

Temperature controlled air intake

To ensure rapid warm-up and improve control of the air/fuel ratio a temperature controlled air intake is fitted (see Fig. U39).

A vacuum operated blending valve attached to the air cleaner assembly is controlled by a thermal sensor in the air intake elbow. This valve blends hot

air from a pick-up point (scoop) adjacent to the exhaust manifold with cold air from under the front wing; thus maintaining a constant temperature of the intake air as it enters the carburetters.

All other details for the Temperature Controlled Air Intake System are given in Chapter K except for the checking procedure which is as follows.

Temperature controlled air intake - To check

1. Disconnect the air intake hose at the intake elbow and check that the correct temperature sensor is fitted, this should be colour coded white.

2. Disconnect the hose from the temperature sensor to the underwing air silencer, at the temperature sensor.

3. Clean the end of the hose, place in the mouth and apply a vacuum by sucking. Check that there is no air leak. Release the vacuum sharply and listen for the vacuum motor within the wing to 'click' open.

4. Reconnect the hoses.

Note

If there is an air leak or the operation of the temperature controlled air intake is suspect, remove the right-hand front underwing sheet and check the hose connection to the vacuum motor; also observe the operation of the temperature flap.

Printed in England
© Rolls-Royce Motors Limited 1977

January 1977
.S.D. 4200
Australia)

Section U6

Ignition system

Data

Ignition timing	9° B.T.D.C. (Static) 15° B.T.D.C. at 1 200 r.p.m. 7° - 13° B.T.D.C. at idle speed (650 r.p.m.) (Approach 1 200 r.p.m. from a higher speed).

Ignition control system

The ignition system utilises an Opus distributor (in which an oscillator pick-up and control unit replace the conventional contact breaker), a high load ignition coil and a ballast resistor. The control unit comprises an electronic oscillator, amplifier and power transistor.

A drum with eight ferrite rods (one per cylinder) moulded into the outer edge is mounted onto the distributor drive-shaft. As the drum rotates a voltage is created each time a ferrite rod passes the oscillator pick-up, this signal is then amplified and used to switch-off the normally conducting power transistor in the primary coil circuit thus inducing a high voltage in the secondary winding which is distributed to the sparking plugs in the normal manner.

The distributor has a conventional centrifugal advance mechanism.

The Opus distributor provides increased accuracy of timing and increased service life before maintenance is required.

For the removal and fitting instructions of the ignition system components refer to Chapter M.

Ignition - To time (using a stroboscope)

The ignition is timed on A1 cylinder which is located at the front left-hand side of the engine (viewed from the front of the car).

Note

If the ignition timing is to be set, ensure that the sparking plugs are in good condition before running the engine; if they require cleaning or renewal the sparking plugs gap should be set to 0,9 mm. (0.035 in.).

1. To check the ignition timing commence by running the engine until normal operating temperature is attained and the choke 'fast-idle' is in the off position. Switch off the engine.
2. Connect a stroboscope and a tachometer to the engine as described in the instructions supplied with the respective equipment.
3. Start the engine and adjust the throttle stop screw to give an idle speed of 1 200 r.p.m. When setting the engine idle speed reduce from a higher speed to 1 200 r.p.m.
4. Direct the flashing light of the stroboscope onto the crankshaft damper timing marks and timing pointer; the pointer is positioned on the right-hand side of the crankshaft damper when viewed from the front of the engine.
5. If the timing pointer does not coincide with the 15° B.T.D.C. mark on the crankshaft damper adjust the ignition timing as follows.
6. Release the clamp screw on the distributor and rotate the head of the distributor in the appropriate direction until the correct timing is obtained. Clockwise rotation of the distributor head advances the ignition and conversely anti-clockwise rotation retards the ignition. After adjustment has been carried out tighten the clamp screw and again check to ensure that the timing has not altered whilst tightening the clamp screw.
7. Set the engine idle speed to 650 r.p.m.
8. Direct the flashing light of the stroboscope onto the crankshaft damper timing marks and timing pointer. Check that the ignition timing is approximately 7° - 13° B.T.D.C.
9. Stop the engine and remove all the test equipment.

Setting the engine idle speed

Ensure that the engine is at normal operating temperature and that the choke 'fast-idle' is in the off position.

The air conditioning system must be switched off and a tachometer connected to the engine in accordance with the manufacturer's instructions.

1. Stop the engine, remove the air intake and blank off the hot idle compensator feed drilling (see Fig. U38); replace the air intake.
2. Start the engine and, if necessary, adjust the engine idle speed to 650 r.p.m. using the throttle stop screw.
3. Stop the engine and remove the air intake. Remove the blank from the hot idle compensator feed drilling and fit the air intake. Detach the tachometer and stroboscopic timing equipment.

Distributor maintenance

The distributor requires no routing maintenance except that, at the mileage intervals specified in the Service Schedules, the moulded cover and H.T. rotor arm should be removed and the spindle shaft bearings lubricated by inserting a few drops of

Printed in England
© Rolls-Royce Motors Limited 1979
November 1979
T.S.D. 4200
(Australia 1977 Model year)

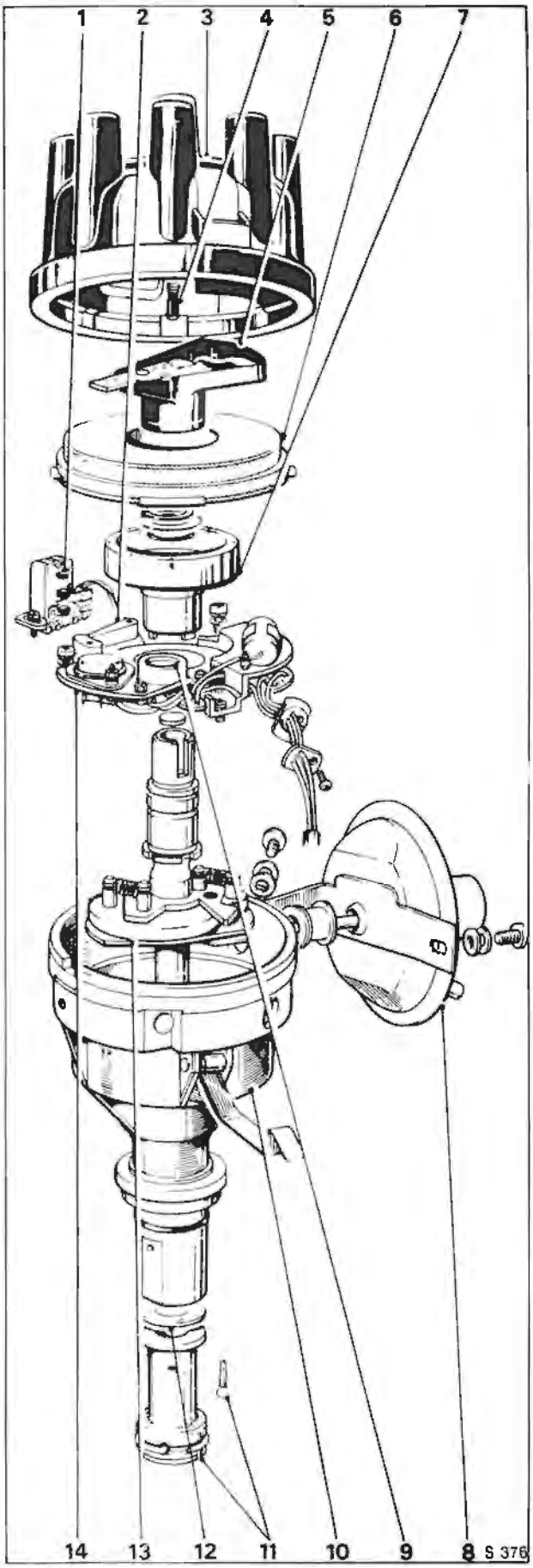

engine oil onto the felt pad. The automatic advance mechanism should also be lubricated at this time with a few drops of engine oil inserted through apertures in the base plate.

Sparking plugs

The sparking plugs approved for this car are Champion RN 14Y. Before fitting the plugs, set the gaps with the aid of a feeler gauge to 0,9 mm. (0.035 in.) and lightly smear the threads with 'Graphogen' grease.

Fig. U40 Ignition distributor

1 Pick-up module
2 Pick-up arm
3 Distributor cover (cap)
4 High tension brush and spring
5 Rotor arm
6 Flash over shield (dust cover)
7 Timing rotor
8 Vacuum advance unit (not connected)
9 Control unit
10 Distributor body
11 Driving dog and pin
12 Thrust washer
13 Automatic advance mechanism
14 Electronic module assembly

Printed in England
© Rolls-Royce Motors Limited 1977
January 1977
T.S.D. 4200
Australia

Section U7

Electrical components

The electrical components described in this section would normally appear in Chapter M - Electrical System, however, as they are only used in connection with the emission control system it is thought more practical to include the information in this Chapter.

The components concerned are as follows.

E.G.R. system lock-out switch
E.G.R. system cut-off solenoid
Anti 'run-on' solenoid
Weakening system cut-off solenoid
Weakening system lock-out switch
Full throttle E.G.R. cut-off micro-switch

E.G.R. system lock-out switch

The bi-metal lock-out switch is situated in the engine coolant thermostat outlet elbow (see Fig. U41).

E.G.R. system lock-out switch - To remove

1. Remove the radiator filler cap and drain the engine coolant.
2. Disconnect the electrical leads.
3. Unscrew and remove the three 2 B.A. setscrews, spring washers and plain washers.
4. Free the joint and withdraw the lock-out switch.

E.G.R. system lock-out switch - To fit

Fit the lock-out switch by reversing the procedure given for removal, noting the following points.

1. Each setscrew has one spring and one plain washer.
2. The joint faces must be clean and a new gasket fitted.

E.G.R. system lock-out switch - To check

1. Withdraw the protective sheath from the electrical connections.
2. Do not disturb any wiring but connect both electrical connections via a test lamp.
3. Ensure that the engine is cold [i.e. engine coolant temperature below approximately 14°C. (57°F.)].
4. Check that the test lamp bulb is illuminated.
5. Start and run the engine; as the coolant exceeds approximately 14°C. (57°F.) the test lamp bulb should extinguish.
6. Stop the engine and allow to cool, noting that as the coolant temperature drops to approximately 12°C. (54°F.) the test lamp bulb again illuminates.

E.G.R. system cut-off solenoid

This assembly is situated rearmost of the three solenoid assemblies mounted on a platform, adjacent to the 'B' bank carburetter (see Figs. U4 & U42).

E.G.R. system cut-off solenoid - To remove

1. Detach the electrical connections, noting the position of the connections to assist identification when assembling.
2. Detach the rubber hose from either side of the solenoid.
3. Unscrew the two 'cheese-headed' mounting screws and withdraw the solenoid.

E.G.R. system cut-off solenoid - To fit

Fit the cut-off solenoid by reversing the procedure given for removal.

E.G.R. system cut-off solenoid circuit wiring - To check

1. Disconnect the 9 White and 14 White/Green cables at the solenoid 'Lucar' connections.
2. Connect a test lamp across the two disconnected cables (in place of the solenoid).
3. Ensure that the engine is cold.

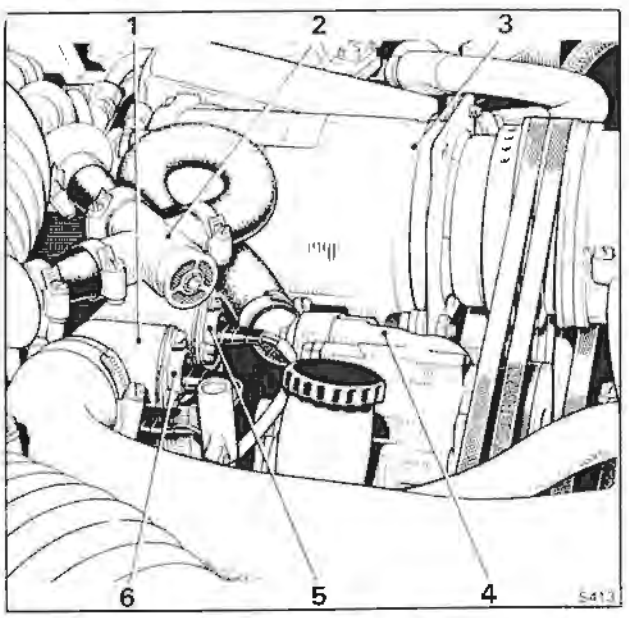

Fig. U41 E.G.R. system lock-out switch

1 Thermostat outlet elbow
2 Three-way connection block
3 Refrigeration compressor
4 Air pump
5 Cooling system booster fan switch
6 E.G.R. lock-out switch

4. Switch on the ignition and note that the bulb of the test lamp is illuminated.
5. Start and run the engine, as the engine coolant temperature exceeds approximately 14°C. (57°F.) the test lamp bulb should extinguish.
6. Depress the full throttle cut-out micro-switch plunger and check to ensure that the test lamp bulb illuminates. Release the plunger and the test lamp bulb should extinguish.

E.G.R. system cut-off solenoid - To check
1. Detach the carburetter vacuum signal to E.G.R. cut-off solenoid hose at the solenoid and blank off the hose.
Connect a suitable length of hose to the solenoid connection.
2. Clean the open end of the additional hose.
3. Switch on the ignition.
4. Place the hose in the mouth and apply suction.
5. If the operation of the solenoid is correct note that the following conditions apply.

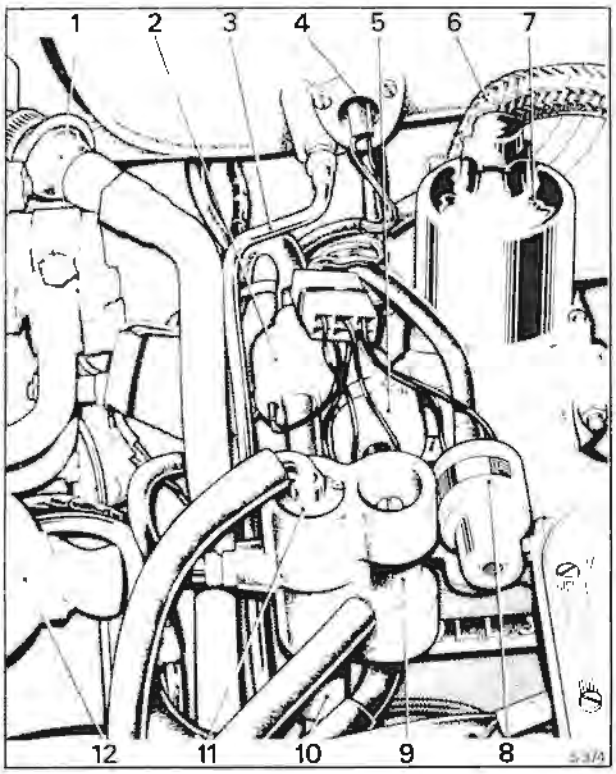

Fig. U42 Solenoid platform
1 Check valve
2 Anti 'run on' solenoid
3 Choke stove pipe
4 Weakening device cut-out switch
5 Weakening device cut-off solenoid
6 Exhaust gas distribution pipe
7 'B' bank carburetter
8 E.G.R. cut-off solenoid
9 Mixture weakening device
10 Fuel receiver
11 Float chamber vent valve
12 Engine oil filler cap

a. With an engine coolant temperature of below approximately 14°C. (57°F.) blowing air through the hose **should not** be possible
b. With an engine coolant temperature of above approximately 14°C. (57°F.) blowing air through the hose **should** be possible.
c. As the engine coolant temperature falls to 12°C. (54°F.) the conditions described in (a) should again apply.
6. If the operation of the solenoid is suspect, fit a new unit.

Anti 'run-on' solenoid

The anti 'run-on' solenoid is situated on a platform adjacent to 'B' bank carburetter; it is the foremost of the three solenoids fitted on the platform.

The use of low octane fuel often causes an engine to 'diesel' (i.e. to continue to run-on after the ignition has been switched off, particularly when the engine is hot). To prevent this an anti 'run-on' solenoid is fitted between the fuel receiver and the induction manifold (see Figs. U4 and U42). When the ignition is switched off the solenoid valve opens and connects the weakening system to the induction manifold, thus creating a high depression in the float chambers which cuts off the fuel supply.

Anti 'run-on' solenoid - To remove
1. Disconnect the rubber hose from either side of the solenoid.
2. Disconnect the two electrical leads at their 'Lucar' connections.
3. Unscrew and remove the two screws situated one on either side of the solenoid body.
4. Withdraw the anti 'run-on' solenoid.

Anti 'run-on' solenoid - To fit
Fit the anti 'run-on' solenoid by reversing the procedure given for removal.

Anti 'run-on' solenoid circuit wiring - To check
1. Connect a test lamp across the two 'Lucar' connections to the solenoid. **Do not disconnect the two connections.**
2. Switch on the ignition and check that the test lamp bulb illuminates.
3. Switch off the ignition and check that the test lamp bulb is extinguished.

Anti 'run-on' solenoid - To check
1. Ensure that the usual safety precautions are carried out (i.e. parking brake firmly applied, gear range selector lever in Park, etc.).
2. Connect an impulse tachometer in accordance with the manufacturer's instructions.
3. Detach the weakening device pressure tapping cap (see Fig. U24) and connect a manometer capable of reading 0 to 15,5 cm. (0 to 6 in.) of water to the tapping.
4. Disconnect the carburetter vacuum signal to E.G.R. cut-off solenoid hose at the solenoid. Blank off the hose.

5. Start and run the engine at the idle speed setting (650 r.p.m.).
6. Switch off the engine and observe the reading on the manometer. The reading should momentarily increase to approximately 15,5 cm. (6.0 in.) as the engine stops.
7. If the reading does not increase, the operation of the anti 'run-on' solenoid is incorrect.

This could be caused by the following.

a. A blockage in the hose (see Fig. U24) from the anti 'run-on' solenoid to the weakening device.
b. A blockage in the hose (see Fig. U24) from the anti 'run-on' solenoid to the vacuum manifold or in the vacuum manifold.
c. Incorrect wiring to the anti 'run-on' solenoid.
d. Faulty anti 'run-on' solenoid.

Weakening system cut-off solenoid

The weakening device cut-off solenoid is the central of the three solenoids mounted on the platform adjacent to 'B' bank carburetter (see Figs. U4 and U42).

Weakening system cut-off solenoid - To remove

1. Detach the electrical connections, noting the position of the connections to assist identification when assembling.
2. Detach the rubber hose from either side of the solenoid.
3. Unscrew the two 'cheese-headed' mounting screws and withdraw the solenoid.

Weakening system cut-off solenoid - To fit

Fit the cut-off solenoid by reversing the procedure given for removal.

Weakening system cut-off solenoid circuit wiring - To check

1. Connect a test lamp across the two 'Lucar' connections to the solenoid. **Do not disconnect the two connections.**
2. Ensure the engine is cold.
3. Switch on the ignition and start the engine noting that the bulb of the test lamp is illuminated.
4. Run the engine, noting that as the engine warms-up [the inlet air temperature reaches approximately 14° C. (57° F.)] the test lamp bulb should extinguish.
5. Stop the engine and allow to cool, noting that when the engine becomes cold [the air in the intake drops to a temperature of approximately 12° C. (54° F.)] the test lamp bulb again illuminates.

Weakening system cut-off solenoid - To check

1. Detach the carburetter vacuum signal to weakening system cut-off solenoid hose at the solenoid and blank off the hose.

Connect a suitable length of hose to the solenoid connection.

2. Clean the open end of the additional hose.
3. Switch on the ignition.
4. Place the hose in the mouth and apply pressure.
5. If the operation of the solenoid is correct note that the following conditions apply.

a. With a cold engine [i.e. the inlet air temperature below approximately 14° C. (57° F.)] blowing air through the hose **should not** be possible.
b. As the engine warms-up [i.e. an inlet air temperature of approximately 14° C. (57° F.) or above] blowing air through the hose **should** be possible.
c. As the engine again cools [i.e. the inlet air temperature drops below approximately 12° C. (54° F.)] the conditions described in (a) should again apply.

Weakening system lock-out switch

The weakening system lock-out switch is situated in the side of the air intake elbow adjacent to the choke stove take-off pipe and 'B' bank carburetter (see Fig. U42).

Weakening system lock-out switch - To remove

1. Withdraw the protective sheath and detach the electrical connections, noting the position of the connections to assist identification when assembling.
2. Unscrew and remove the three setscrews and spring washers.
3. Withdraw the lock-out switch.

Weakening system lock-out switch - To fit

Fit the lock-out switch by reversing the procedure given for removal.

1. Ensure that the gasket is in a good condition.
2. The setscrews must be fitted with spring washers.
3. The protective sheath must be fitted over the electrical connections.

Weakening system lock-out switch circuit wiring - To check

1. Detach the 9 White/Blue cable from the weakening system lock-out switch.
2. Fit one side of a test lamp to the 9 White/Blue cable and the other side to a good earth.
3. Switch on the ignition noting that the test lamp bulb illuminates.
4. Switch off the ignition noting that the test lamp bulb extinguishes.

Weakening system lock-out switch - To check

1. Withdraw the protective sheath from the electrical connections.
2. Do not disturb any wiring but connect both electrical connections via a test lamp.
3. Ensure that the engine is cold [i.e. intake air temperature below approximately 14° C. (57° F.)] and switch on the ignition.
4. Check that the test lamp bulb is illuminated.

Printed in England
© Rolls-Royce Motors Limited 1977
January 1977
.S.D. 4200
ustralia)

5. Start and run the engine; as the engine warms-up [i.e. the inlet air temperature exceeds approximately 14° C. (57° F.)] the test lamp bulb should extinguish.

Full throttle E.G.R. cut-off micro-switch

The full throttle E.G.R. cut-off micro-switch is mounted on a bracket which is attached to the forward side of 'A' bank carburetter. The micro-switch is operated by a plunger fitted to the throttle linkage (see Fig. U43).

Full throttle E.G.R. cut-off micro-switch - To remove

1. Detach the two 'Lucar' connections adjacent to the micro-switch.
2. Unscrew the two retaining setscrews and withdraw the micro-switch.

Full throttle E.G.R. cut-off micro-switch - To fit

Fit the full throttle E.G.R. cut-off micro-switch by reversing the procedure given for removal noting the following point.

1. After fitting the micro-switch ensure that it is correctly set.

Full throttle E.G.R. cut-off micro-switch circuit wiring - To check

1. Disconnect the 9 White and 14 White/Green cables at the E.G.R. system cut-off solenoid 'Lucar' connections.

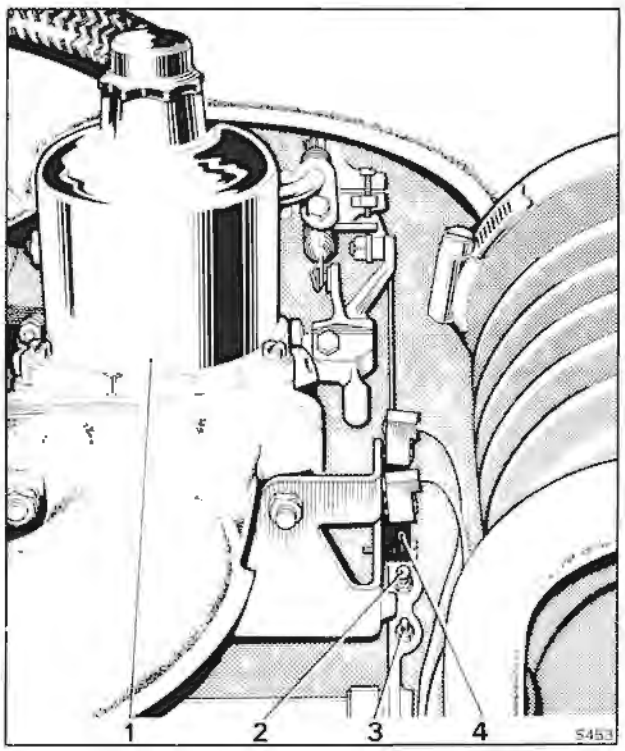

Fig. U43 Full throttle E.G.R. cut-out micro-switch

1 'A' bank carburetter
2 Micro-switch operating plunger
3 Full throttle stop
4 Cut-out micro-switch

2. Connect a test lamp across the two disconnected cables (in place of the solenoid).
3. Detach the two 'Lucar' connections from the full throttle E.G.R. cut-off micro-switch and connect a suitable switch across the cable connection (in place of the micro-switch).
4. Ensure that the engine is cold.
5. Switch on the ignition and note that the test lamp bulb is illuminated.
6. Start and run the engine, as the engine coolant temperature exceeds approximately 14° C. (57° F.) the test lamp bulb should extinguish.
7. Switch on (make the contacts) the switch that has replaced the micro-switch, noting that the test lamp bulb illuminates.

Full throttle E.G.R. cut-off micro-switch - To set

1. It is important to ensure that the engine throttle linkage (refer to Section U5 and Chapter T) and the kick-down micro-switch (refer to Chapter T) are correctly set.
2. Depress the accelerator pedal until it just touches the toeboard mounted kick-down switch (further depression of the pedal requires increased effort).
3. Hold the accelerator in this position.
4. Release the lock-nut and screw the spring loaded operating button (see Fig. U43) away from the E.G.R. full throttle cut-out micro-switch.
5. Screw the spring loaded operating button towards the micro-switch until the micro-switch is heard to 'click'. Secure the lock-nut.
6. Depress the accelerator to operate the toeboard kick-down micro-switch and then set the full throttle stop (see Fig. U43) to prevent overloading of the micro-switch.
7. The full throttle stop should be set so that the throttle movement is stopped just before the full spring travel of the micro-switch spring loaded operating button is reached.

Full throttle E.G.R. cut-off micro-switch - To check

To check the full throttle E.G.R. cut-off micro-switch carry out the instructions given in E.G.R. system cut-off solenoid circuit wiring - To check, noting in particular Operation 6.

Section U8

Fault diagnosis

Symptoms	Possible Cause
1. Engine will not start. (Starter motor operating)	**1.** (a) Ignition circuit broken. (b) Failed anti 'run-on' solenoid or failure of electrical supply circuit. (c) Ignition system faulty. (d) Damaged or contaminated ignition high tension circuit. (e) Blocked fuel feed line, fouled float chamber filters. (f) Faulty choke bi-metal coil. (g) Choke solenoid inoperative. (h) Faulty choke 'fast idle' mechanism. (i) Air leak into induction system. (j) Faulty hot idle mixture compensator. (k) Weakening device filter blocked, weakening device air intake non-return valve failed or blockage in rubber connecting hoses. (l) Faulty weakening device cut-off solenoid or failure of electrical supply circuit. (m) Faulty weakening device control switch or failure of electrical supply circuit. (n) Dislodged venturi in weakening device. (o) Flooding of carburetter float chamber or jet. (p) Exhaust gas recirculation valve(s) failed.
2. Engine idles very roughly.	**2.** (a) Ignition system faulty. (b) Fouled sparking plugs. (c) Damaged or contaminated ignition high tension circuit. (d) Air leak into induction system (e) Faulty hot idle compensator. (f) Weakening device filter blocked, weakening device air intake non-return valve failed or blockage in rubber connecting hoses. (g) Badly worn or damaged carburetter control linkage. (h) Flooding of carburetter float chamber or jet. (i) Sticking carburetter piston. (j) Incorrect operation of carburetter jet compensation. (k) Fouled carburetter float chamber or jet. (l) Exhaust gas recirculation valve(s) failed. (m) Incorrect operation of temperature controlled air intake system.
3. Engine stalls.	**3.** (a) Ignition circuit broken. (b) Failed anti 'run-on' solenoid or failure of electrical supply circuit. (c) Ignition system faulty. (d) Damaged or contaminated ignition high tension circuit. (e) Blocked fuel feed line, fouled float chamber filters.

Printed in England
© Rolls-Royce Motors Limited 1977
January 1977
T.S.D. 4200 (Australia)

Symptoms	Possible Cause
3. Engine stalls (continued)	(f) Air leak into induction system. (g) Faulty hot idle mixture compensator. (h) Weakening device filter blocked, weakening device air intake non-return valve failed or blockage in rubber connecting hoses. (i) Badly worn or damaged carburetter control linkage. (j) Flooding of carburetter float chamber or jet. (k) Sticking carburetter piston. (l) Incorrect operation of carburetter jet compensation. (m) Fouled carburetter float chamber or jet. (n) Exhaust gas recirculation valve(s) failed.
4. (i) Engine shows signs of power loss evident at high speeds and loading. (ii) Engine misfires particularly on hard acceleration from low speed.	**4.** (a) Ignition system faulty. (b) Fouled sparking plugs. (c) Damaged or contaminated ignition high tension circuit. (d) Blocked fuel feed line, fouled float chamber filters. (e) Choke system operation incorrect. (f) Sticking carburetter piston. (g) Fouled carburetter float chamber or jet. (h) Faulty exhaust gas recirculation full throttle cut-out switch or failure of electrical supply circuit. (i) Exhaust gas recirculation valve(s) failed. (j) Fouled exhaust gas recirculation valve(s) cut-out solenoid or electrical supply circuit.
5. Engine hesitates or misfires under light load.	**5.** (a) Failed anti 'run-on' solenoid or failure of electrical supply circuit. (b) Ignition system faulty. (c) Fouled sparking plugs. (d) Damaged or contaminated ignition high tension circuit. (e) Blocked fuel feed line, fouled float chamber filters. (f) Air leak into induction system. (g) Faulty hot idle mixture compensator. (h) Weakening device filter blocked, weakening device air intake non-return valve failed or blockage in rubber connecting hoses. (i) Dislodged venturi in weakening device. (j) Flooding of carburetter float chamber or jet. (k) Incorrect operation of carburetter jet compensation. (l) Fouled carburetter float chamber or jet. (m) Exhaust gas recirculation valve(s) failed. (n) Incorrect operation of temperature controlled air intake system.
6. Increase in fuel consumption.	**6.** (a) Ignition system faulty. (b) Faulty choke bi-metal coil. (c) Choke system operation incorrect. (d) Air leak into induction system. (e) Faulty hot idle mixture compensator. (f) Weakening device filter blocked, weakening device air intake non-return valve failed or blockage in rubber connecting hoses.

Symptoms	Possible Cause
6. Increase in fuel consumption (continued)	(g) Faulty weakening device cut-off solenoid or failure of electrical supply circuit. (h) Faulty weakening device control switch or failure of electrical supply circuit. (i) Air leak in mixture weakening system. (j) Flooding of carburetter float chamber or jet. (k) Sticking carburetter piston. (l) Incorrect operation of carburetter jet compensation. (m) Incorrect purge flow rate. (n) Exhaust gas recirculation valve(s) failed.
7. Decrease in fuel consumption.	**7.** (a) Air leak in mixture weakening system. (b) Incorrect operation of carburetter jet compensation. (c) Incorrect purge flow rate. (d) Faulty exhaust gas recirculation temperature control switch or failure of electrical supply circuit. (e) Exhaust gas recirculation valve(s) failed.
8. Engine 'backfires' on overrun.	**8.** (a) Ignition system faulty. (b) Air leak into induction system. (c) Faulty hot idle mixture compensator. (d) Exhaust gas recirculation valve(s) failed.
9. Sudden increase in engine idle speed.	**9.** (a) Faulty choke 'fast-idle' mechanism. (b) Failed carburetter overrun valve.
10. Excessive noise from air injection pump or system.	**10.** (a) Faulty or damaged air injection pump, relief or check valves, connecting hoses or pipes.

Printed in England
© Rolls-Royce Motors Limited 1977

Section U9

Workshop tools

Tool Number	Description
RH 8090	Pliers - wire hose clips
RH 8841	Dial gauge - carburetter piston lift
RH 8880	Setting jig - throttle levers
RH 8945	Connector - choke stove pipe
RH 9086	Fitting tool - carburetter piston ball race clip
RH 9096	Fitting tool - 'A' bank mixture adjusting screw tamperproof seal
RH 9097	Fitting tool - 'B' bank mixture adjusting screw tamperproof seal
RH 9105	Kit - to adapt RH 8841 to fit S.U. HIF 7 carburetters

Printed in England
© Rolls-Royce Motors Limited 1977
January 1977
T.S.D. 4200
(Australia)

Section U10

Running changes

Printed in England

© Rolls-Royce Motors Limited 1977

January 1977

T.S.D. 4200
(Australia)

T 140

Printed in England

© Rolls-Royce Motors Limited 1978

January 1978

T.S.D. 4200

Chapter U

Emission control systems

Applicable to 1978 model year cars destined for Australia

Section

U1 Introduction
U2 Exhaust emission control system
U3 Fuel evaporative emission control system
U4 Crankcase emission control system
U5 Carburetters and Automatic choke system
U6 Ignition system
U7 Electrical components
U8 Fault diagnosis
U9 Workshop tools
U10 Running changes

Chapter U - 1978 Australia

Issue record sheet 1

November 1979

The dates quoted below refer to the issue date of individual pages within this chapter.

Section	U1	U2	U3	U4	U5	U6	U7	U8	U9	U10
Page No.										
1	Jan 78	Jan 78	Jan 78	Jan 78	Oct 78	Nov 79	Jan 78	Jan 78	Jan 78	Jan 78
2	Jan 78	Jan 78	Jan 78		Oct 78	Nov 79	Jan 78	Jan 78		
3	Jan 78	Jan 78	Jan 78		Jan 78		Jan 78	Jan 78		
4	Jan 78	Jan 78	Jan 78		Jan 78		Jan 78			
5		Nov 79	Jan 78		Jan 78					
6		Nov 79	Jan 78		Jan 78					
7		Jan 78	Jan 78		Jan 78					
8			Jan 78		Jan 78					
9			Jan 78		Oct 78					
10			Jan 78		Oct 78					
11					Jan 78					
12					Jan 78					
13					Jan 78					
14										
15										
16										
17										
18										
19										
20										
21										
22										
23										
24										
25										
26										
27										
28										
29										
30										
31										
32										
33										
34										
35										
36										
37										
38										
39										
40										
41										
42										
43										
44										
45										
46										
47										
48										

Printed in England

© Rolls-Royce Motors Limited 1979

Section U1

Introduction

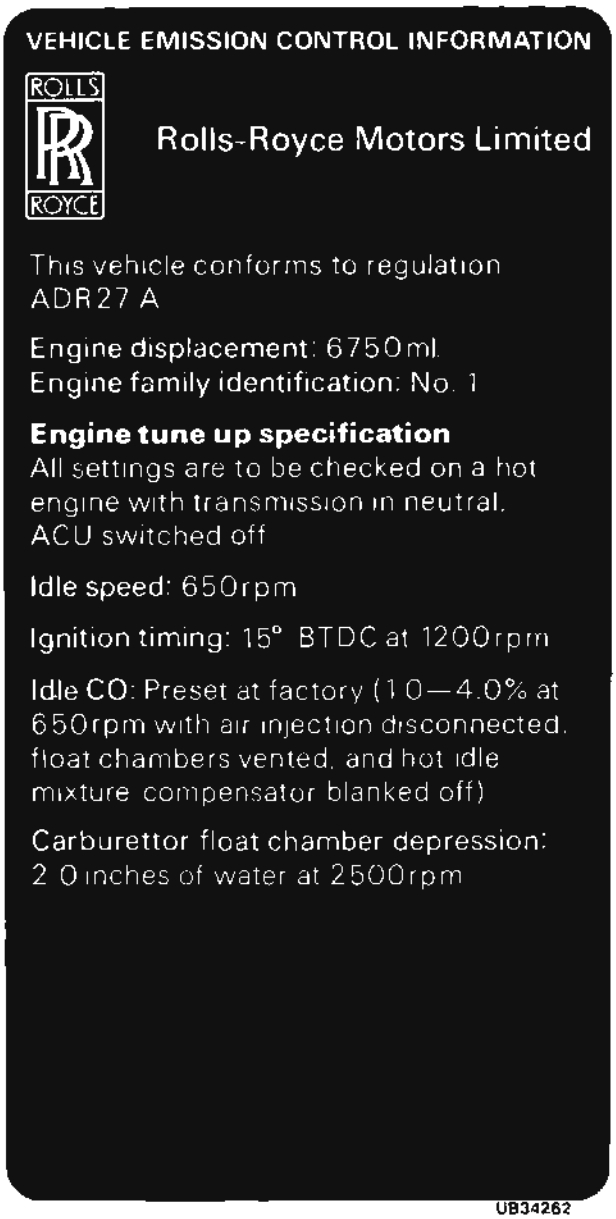

Fig. U1 Emission control certification label

This Chapter has been written specifically for cars fitted with Emission Control Systems conforming to the Australian emission control regulations, applicable to 1978 model year new motor vehicles.

It is important therefore that Service Personnel fully understand the contents of this Chapter so that the special servicing can be correctly carried out.

Rolls-Royce and Bentley motor cars conforming to the above regulations and produced to the 1978 model year specification can be readily identified as follows.

1. Emission Control Certification Label
A 1978 Emission Control Certification Label (illustrated) located on the wing valance to the rear of the right-hand front suspension spring cover.

Engine compartment
Figures U2 and U3 overleaf show the location of the major emission control system components within the engine compartment.

Hose routing diagram
Figure U4 within the Introduction section gives details of the various hose 'runs' and connections in and around the engine compartment, that are associated with the emission control systems components.

Torque tightening
When fitting the various emission control systems components, ensure that the securing nuts and set-screws are tightened to the torque figures given in Chapter P, unless otherwise stated in this Chapter.

Running changes
Before commencing any work on these cars, refer to Section U10.

Printed in England
© Rolls-Royce Motors Limited 1978

January 1978
T.S.D. 4200 (Australia)

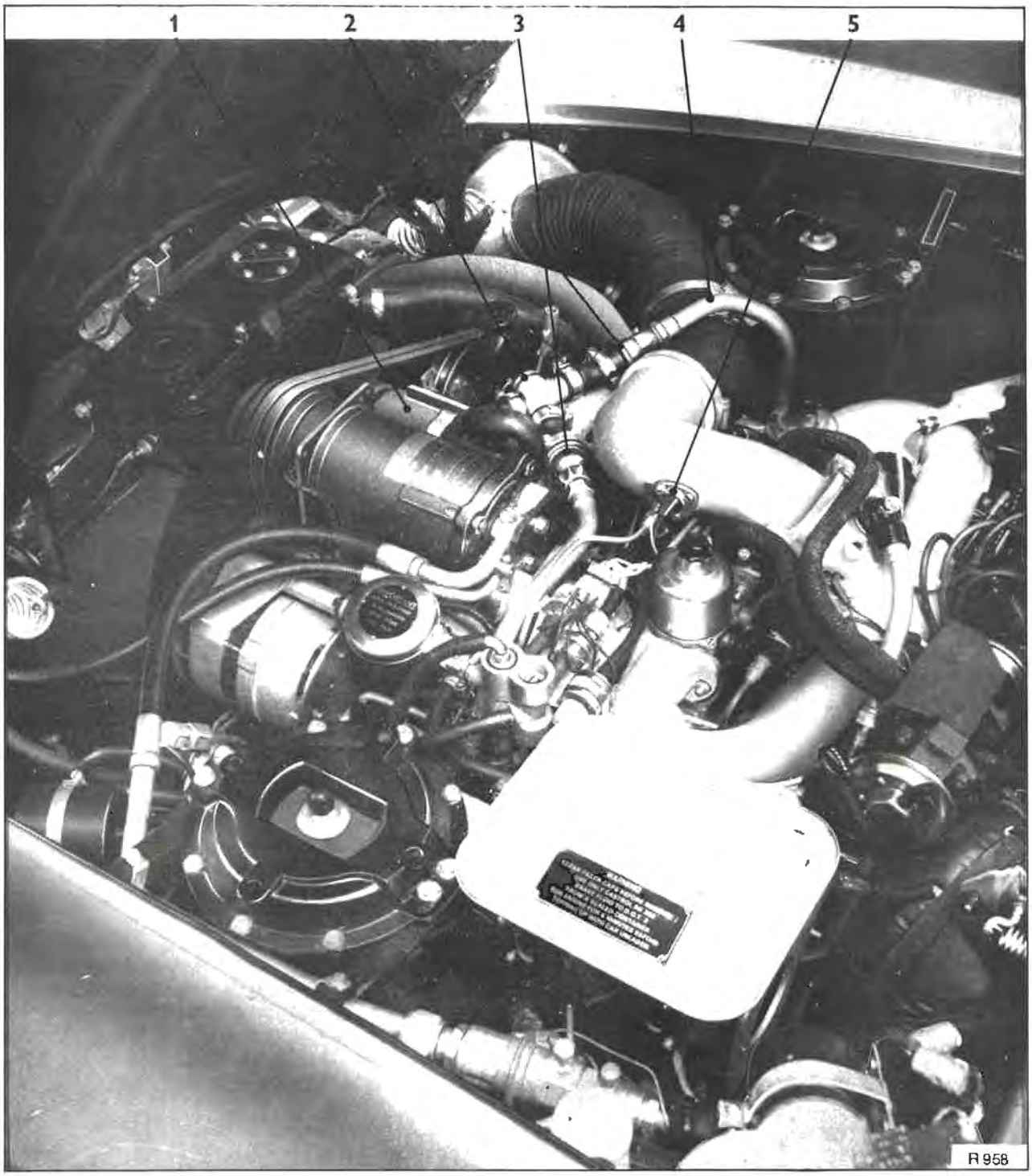

Fig. U2 Engine compartment details (L.H. side)

1 Air pump
2 Connection block and relief valve
3 Check valves
4 'A' bank air manifold
5 Weakening device cut-out switch



Fig. U3 Engine compartment details (R.H. side)

1 Exhaust gas recirculation valves
2 Exhaust gas recirculation cut-off solenoid
3 Weakening device assembly
4 Weakening device cut-off solenoid
5 Anti 'run-on' solenoid

Printed in England
© Rolls-Royce Motors Limited 1978
January 1978
T.S.D. 4200 (Australia)

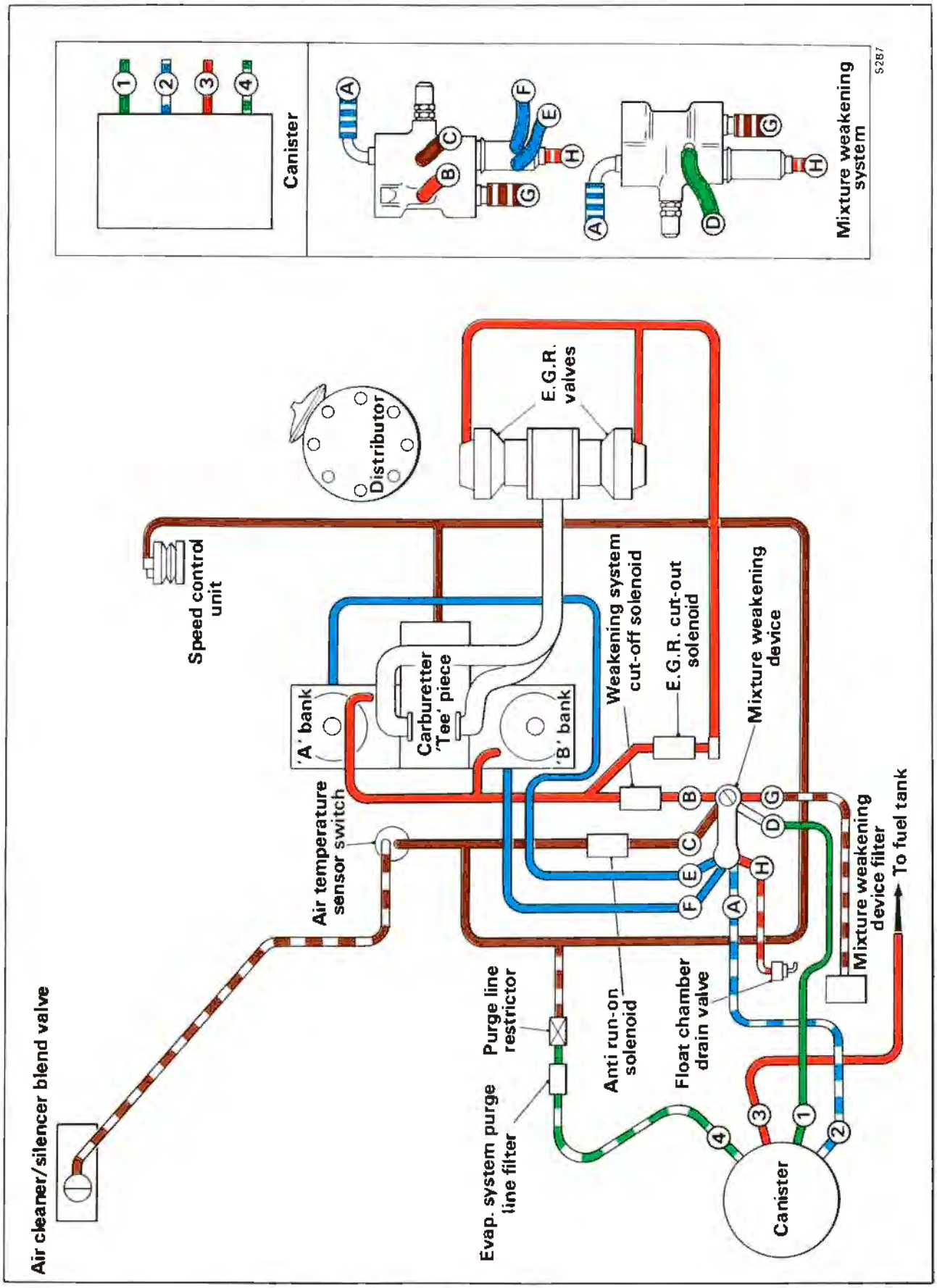

Fig. U4 Hose routing diagram - 1978 model year cars

Printed in England
© Rolls-Royce Motors Limited 1978
January 1978
T.S.D. 4200
(Australia)

Section U2

Exhaust emission control system

The Exhaust Emission Control System is designed to reduce the carbon monoxide, unburnt hydrocarbon and oxides of nitrogen content in the exhaust gases.

The system does not eliminate the danger caused by inhaling exhaust gases in a confined area.

Air from the atmosphere is drawn into the engine driven air injection pump through a centrifugal filter. From the pump, a quantity of air proportional to engine speed passes via a three-way connection block (containing a relief valve), through check valves to the air manifolds and then into the exhaust ports. This air combines with the exhaust gases discharged from the combustion chambers and promotes the oxidation process in the exhaust system. The gases then pass through the exhaust system to atmosphere.

In addition, a proportion of the exhaust gas from the exhaust balance pipe situated between the two downtake pipes, is recirculated through vacuum operated metering valves into the carburetter 'tee' piece, just downstream of the throttle plates. The recirculated exhaust gas mixes with the inlet charge of fuel 'air mixture in the induction manifold and is distributed to the cylinders, lowering the peak combustion temperature and reducing oxides of nitrogen emissions.

Before commencing work on the exhaust emission control system, care should be taken to ensure that the relevant components are not hot.

The system is illustrated in Figure U5 and comprises the following main components.

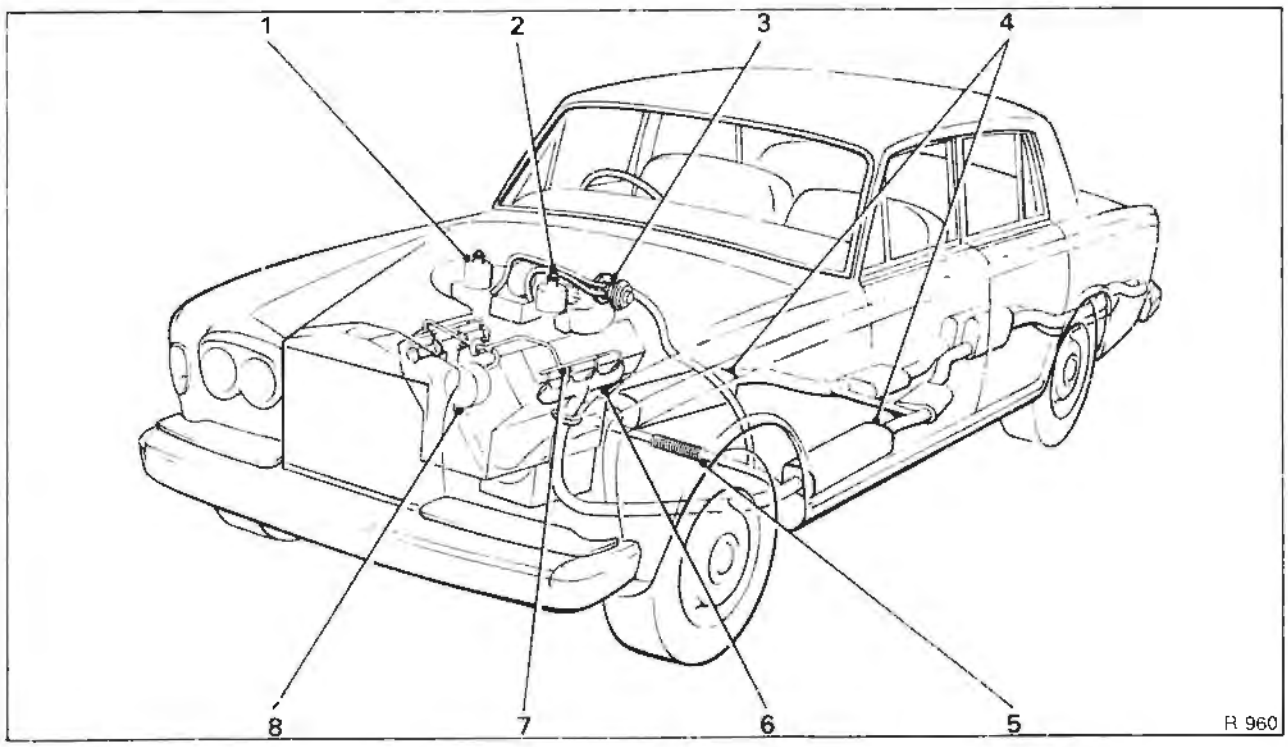

Fig. U5 Exhaust emission control system

1 'A' bank carburetter
2 'B' bank carburetter
3 Exhaust gas recirculation valves
4 Exhaust system front silencers
5 Exhaust system balance pipe
6 'B' bank exhaust manifold
7 'B' bank air manifold
8 Air pump

Air injection system (see Fig. U6)
Air manifolds
Air pump
Check valves
Centrifugal air filter
Pressure relief valve
Three-way connection block

Exhaust gas recirculation system (E.G.R.) (see Fig. U9)
Cut-off solenoid (see Section U7)
Cut-out switch (see Section U7)
Distribution pipes
E.G.R. valves
E.G.R. valves heatshield
Feed pipe
Full throttle cut-out micro-switch (see Section U7)

Exhaust system (see Fig. U5)
(For details of the Exhaust system refer to Chapter Q).

For details of the servicing and maintenance requirements of the Exhaust Emission Control System, refer to the Service Schedules Manual - T.S.D. 4117

Air injection system (see Figs. U5 and U6)
A detailed description of the air injection system is given at the beginning of this section.

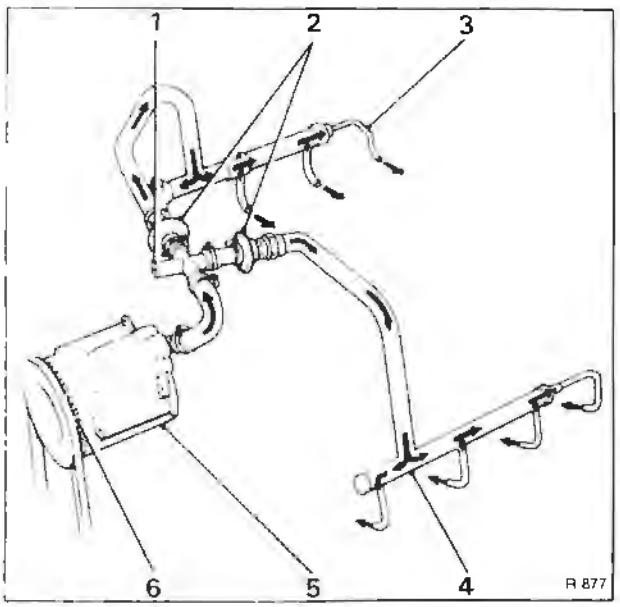

Fig. U6 Air injection system
1 Relief valve
2 Check valves
3 'A' bank air manifold
4 'B' bank air manifold
5 Air pump
6 Air pump intake

Air injection system - To test
1. Connect an electric impulse tachometer to the engine in accordance with the manufacturer's instructions.
2. Start and run the engine at a constant speed of 2 000 r.p.m., check that air does not escape from the relief valve.
3. If air does escape during Operation 2, check that the correct (blue) setting plug is fitted to the pressure relief valve.
4. If the system does not operate as described in Operation 2, stop the engine and fit a new three-way connection block assembly (containing the pressure relief valve).
5. Repeat Operation 2.
6. Stop the engine and remove the test equipment.

Air injection system - Leak check
Check the air injection system for air leaks by carrying out the following sequence of operations.
1. Ensure that the ignition is switched off.
2. Visually inspect the condition of all hoses, pipes and joints associated with the air injection system.
3. Ensure that all worm drive clips are tight.
4. Start the engine and listen carefully for any evidence of an air leak from the system.
5. If an air leak is suspected it is permissible to coat the component or hose with a soap solution; soap bubbles will confirm an air leak.

Air injection system - Fault diagnosis
To diagnose malfunctioning of the air injection system refer to Section U8 - Fault diagnosis.

Air manifolds
The air manifolds convey air from the check valves to the engine exhaust ports. One air manifold is fitted to each bank of cylinders and is identified as 'A' bank air manifold or 'B' bank air manifold.

To remove an air manifold, unscrew the check valve union and the four ¾ in. A/F adapters in the cylinder head.

The 'A' bank air manifold is reasonably straight forward to withdraw but 'B' bank air manifold will require the disconnecting of several other hoses and pipes (e.g. choke stove pipes, fuel evaporative weakening device hoses and pipes, etc.), to facilitate withdrawal.

Fit the air manifolds by reversing the procedure given for removal, noting that the check valve union has a tapered thread. All the adapters in the cylinder head should be torque tightened to the figures given in Chapter P.

Air pump
The air pump is of the rotary vane type and is belt driven from the engine coolant pump. The centrifugal air filter is an integral part of the pump and is situated between the pump body and the pump driving pulley.

Air pump - To remove (see Fig. U7)

1. Disconnect the battery (refer to Chapter M).
2. Unscrew the worm drive clip and detach the hose from the pump to the three-way connection block, at the pump. Blank off the hose and pump connections to prevent the ingress of dirt, etc.
3. Slacken the two 9/16in. A/F setscrews on the drive belt adjustment strut; remove the upper bolt.
4. Remove the drive belt from the pulley.
5. Support the air injection pump and unscrew and remove the 9/16in. A/F mounting setscrew situated on the opposite side of the pump pulley.

Air pump - To fit

Fit the air pump by reversing the procedure for removal noting the following.

1. Ensure that the driving belt is adjusted so that an applied force of 5,5 kg. (12 lbs.) mid-way between the air injection pump pulley and the coolant pump pulley causes the belt to deflect 9,5 mm. (0.375 in.).

Air pump pulley

1. To remove, unscrew and remove the three set-screws situated around the centre of the pulley. Withdraw the pulley.
2. To fit the pulley, reverse the procedure given for removal ensuring that the setscrews are torque tightened to the correct figure (see Chapter P).

Check valves

The check valves are non-return valves (one-way valves) and one is fitted into the air injection system between the air pump and the air manifolds, for each bank of cylinders.

The check valves prevent the backflow of exhaust gases into the air lines or air pump, they operate whenever the exhaust back pressure exceeds the air pump delivery pressure at high speed and/or in the case of air pump drive belt failure.

To remove a check valve, slacken the worm drive clip situated on the air pump to check valve hose. Unscrew the union from the air manifold and withdraw the check valve. Fit a check valve in the reverse order.

Pressure relief valve (see Figs. U6 and U8)

The spring loaded pressure relief valve is permanently housed within the three-way connection block, its function is to allow excess air to escape from the air injection system when the check valves are closed. The relief valve prevents damage to the pump vanes and excess exhaust temperatures under extreme operating conditions.

If it becomes necessary to remove the pressure relief valve three-way connection block, slacken the worm drive clips on the three connecting hoses and withdraw the assembly.

To test the pressure relief valve, blank off the two connections for the check valves and apply pressure to the connection from the pump; ensure that the relief valve operates within the following acceptable limits.

0,5 kg/sq.cm. to 0,6 kg/sq.cm.
(7.4 lb/sq.in. to 8.4 lb/sq.in.)

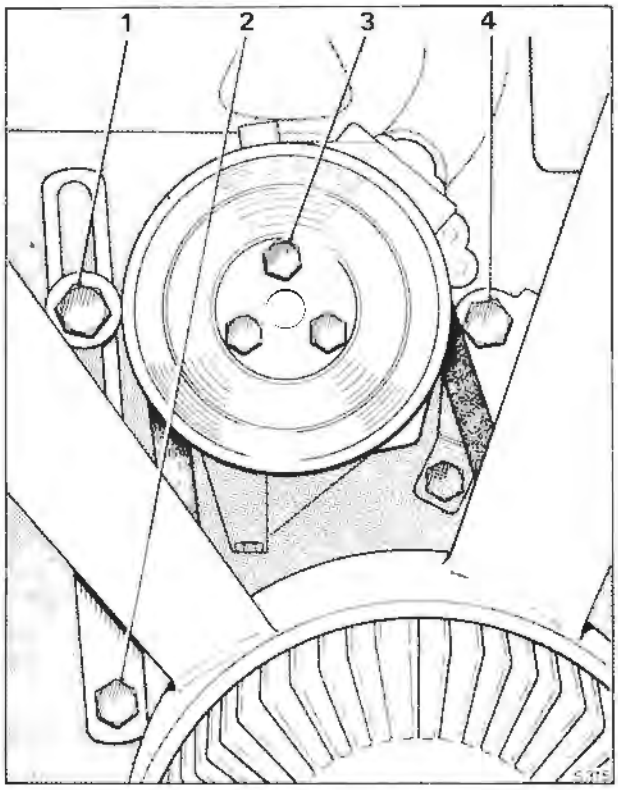

Fig. U7 Air injection pump

1 Adjustment strut upper setscrew
2 Adjustment strut pivot setscrew
3 Pulley retaining setscrews
4 Air pump mounting setscrew

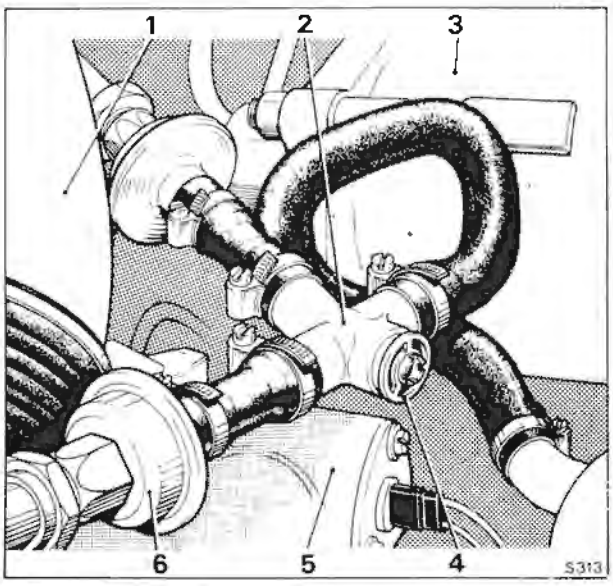

Fig. U8 Three-way connection block

1 Carburetter air intake
2 Three-way connection block
3 Refrigeration compressor
4 Air injection system pressure relief valve
5 Thermostat elbow
6 Check valve

Printed in England
© Rolls-Royce Motors Limited 1978
January 1978
T.S.D. 4200 (Australia)

Exhaust gas recirculation system (E.G.R.)

(see Figs. U5 and U9)

A detailed description of the exhaust gas recirculation system (E.G.R.) is given at the beginning of this section.

Distribution pipes

The distribution pipes convey the recirculated exhaust gas from the E.G.R. valves into the carburetter 'tee' piece.

Distribution pipes - To remove

1. Using a 7/16 in. A/F spanner unscrew and remove the two nuts and washers securing the distribution pipes to the E.G.R. valve mounting block.
2. Unscrew the 7/16 in. A/F setscrews retaining the heatshield to 'B' bank air horn; collect the washers.
3. Ease the mounting block rearward to free the joint face; discard the gasket.
4. Support the weight of the distribution pipes.
5. Unscrew and remove the four 2 B.A. setscrews and washers securing the two distribution pipe flanges to the carburetter 'tee' piece.
6. Withdraw the distribution pipes and discard the gaskets.

Distribution pipes - To fit

Fit the distribution pipes by reversing the procedure given for removal, noting the following points.

1. Ensure that all joint faces are clean and free from carbon deposits.
2. Coat the joint faces and gaskets at the carburetter 'tee' piece with 'Wellseal'

Distribution pipes - To clean

1. Remove the distribution pipes as described in Distribution pipes - To remove.
2. With a pointed scraper clean as much carbon deposit as possible from inside the distribution pipes and the joint faces. Particular attention should be given to the carburetter end of the pipes, because the majority of the carbon deposit will be found in this area.
3. Using wire brushes complete the cleaning operation on the distribution pipes.
4. With a pointed scraper remove the carbon deposits from the carburetter 'tee' piece connection orifices.
5. Before fitting the distribution pipes thoroughly blow-out the pipes and carburetter 'tee' piece connections with compressed air.
6. Fit the distribution pipes as described in Distribution pipes - To fit.

E.G.R. valves (see Fig. U10)

A proportional flow recirculation system is used. Exhaust gas from the balance pipe between the two downtakes of the dual exhaust system passes through twin metering orifices and is recirculated into the carburetter 'tee' piece. Atmospheric pressure is maintained downstream of the metering orifices by means of the control valves so that the recirculation flow is proportional to the relative effective areas of the metering orifices and the main exhaust system.

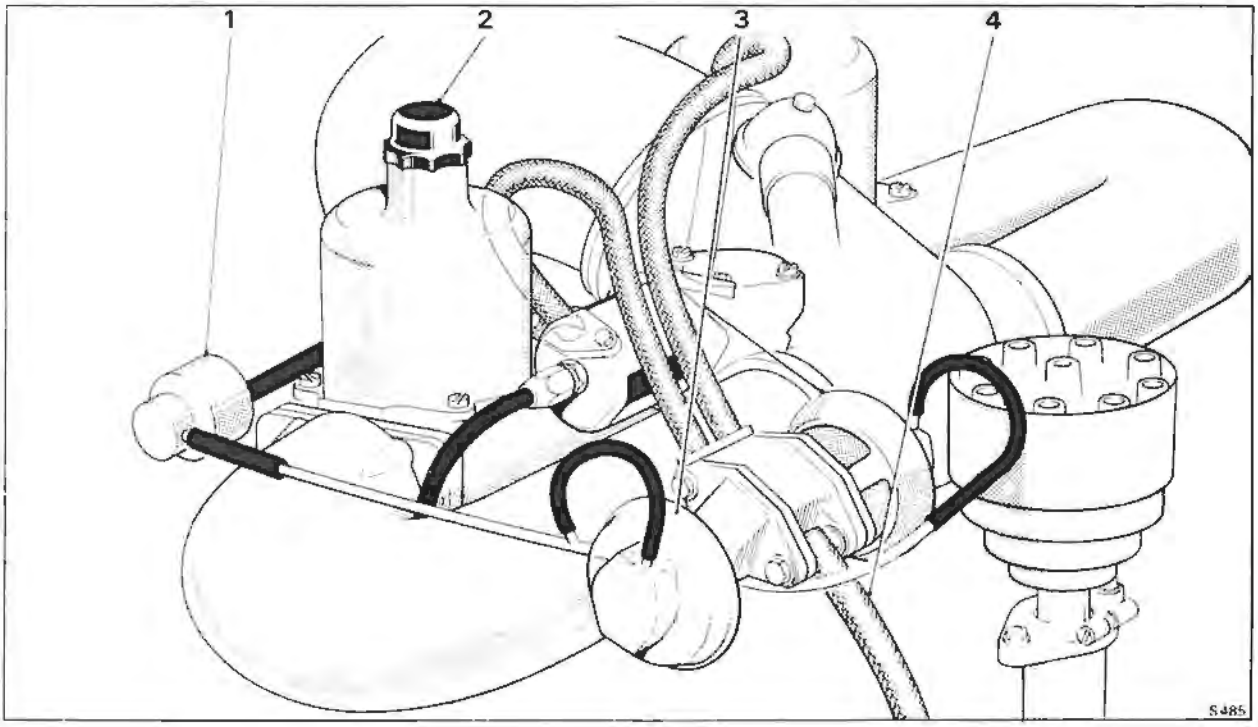

Fig. U9 Exhaust gas recirculation system

1 E.G.R. cut-off solenoid
2 'B' bank carburetter
3 E.G.R. valves
4 E.G.R. feed pipe

Dilution of the inlet charge with exhaust gas lowers the peak combustion temperature and reduces the formation of oxides of nitrogen.

Twin vacuum operated control valves each with an integral pressure transducer are used and the metering orifice of each valve is incorporated in an extension of the valve seat. A carburetter throttle gated vacuum signal is used to operate the valve. This signal is modulated by the integral transducer valve and applied to the control valve diaphragm so that the control valve lift is adjusted to maintain a constant control pressure, just above atmospheric pressure between the metering orifice and the control valve seat.

When the engine load is increased, the control pressure exceeds the transducer valve setting and the transducer valve closes applying the full vacuum signal to the control valve diaphragm and thus opening the control valve and increasing the E.G.R. flow. Similarly, as the engine load is reduced, the control pressure becomes less than the transducer valve setting and the transducer valve opens, venting the diaphragm chamber to atmosphere and causing the control valve to close and reduce the E.G.R. flow. The transducer valve constantly cycles adjusting the control valve lift to maintain a constant control pressure under all normal operation conditions.

The use of a throttle gated vacuum signal ensures complete control valve closure at idle to maintain good idle quality.

To improve starting and drive-away under low temperature conditions a solenoid valve (see Section U7) interrupts the carburetter vacuum signal to the E.G.R. valves until a predetermined temperature is reached.

A micro-switch operated by the throttle lever (see Section U7) also controls this solenoid to provide E.G.R. cut-out at full throttle. At high engine speed the exhaust gas back pressure is high. As a result, the integral transducer valve directs full carburetter vacuum signal to the control valves. At high engine speed under full throttle operation the air intake restriction is sufficient to produce a carburetter vacuum signal large enough to open the control valves, this results in excessive flow under these conditions which would seriously degrade performance and reduce the safety margin for overtaking.

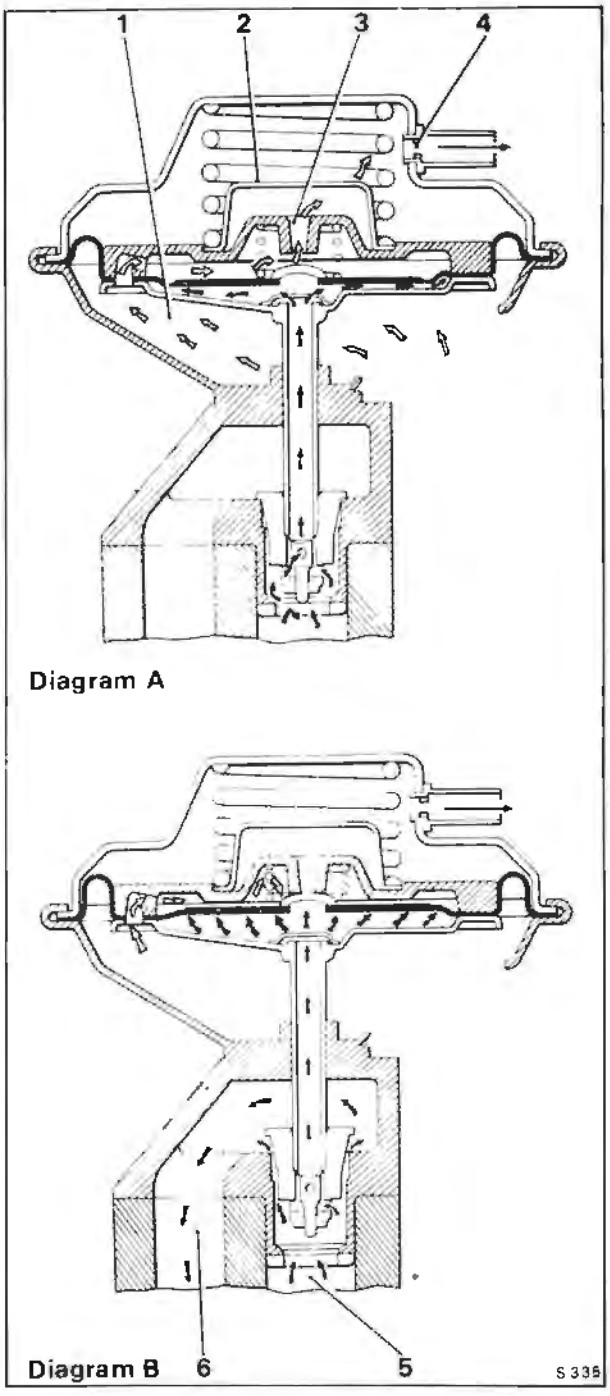

Fig. U10 Exhaust gas recirculation valve

Ambient air ⇦
Exhaust gas ⬅

Diagram A - Exhaust pressure below operating value

1 Ambient air
2 Air filter
3 Air bleed
4 Restrictor

Diagram B - Exhaust pressure above operating value

5 Exhaust gas from balance pipe
6 Exhaust gas to carburetter 'tee' piece

E.G.R. valves - To remove

1. Detach the small diameter rubber hose from the valve.

2. Unscrew and remove the two ½ in. A/F nuts retaining the valve to the mounting flange; collect the two washers.

3. Withdraw the valve and remove the gasket from the mounting flange.

4. Repeat Operations 1 to 3 inclusive on the second valve.

Printed in England
© Rolls-Royce Motors Limited 1979
November 1979
T.S.D. 4200
(Australia 1978 Model year)

E.G.R. valves - To fit
Fit the valves by reversing the procedure for removal, noting the following points.
1. Ensure that the valve pintle (see Fig. U10) is secure on the valve stem.
2. Ensure that the valve and mounting flange joint faces are clean and free from carbon deposits.
3. Always use a new mounting flange gasket.

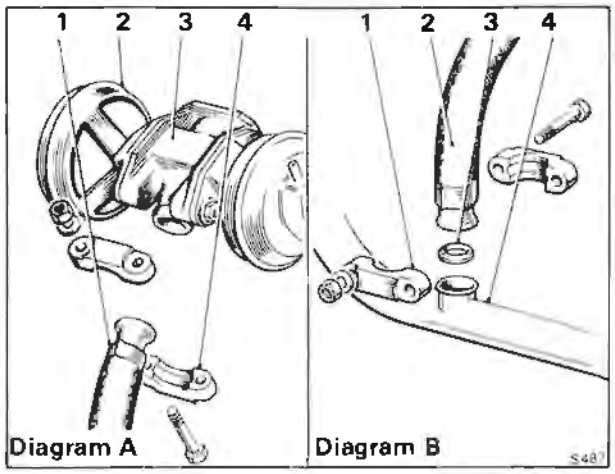

Fig. U11 E.G.R. feed pipe joints
Diagram A - Upper joint
1 Feed pipe
2 E.G.R. valve
3 E.G.R. valve mounting block
4 Clamp bracket
Diagram B - Lower joint
1 Clamp bracket
2 Feed pipe
3 Sealing ring
4 Exhaust balance pipe

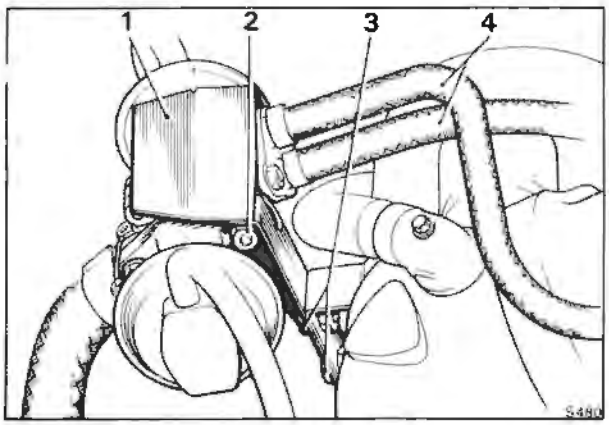

Fig. U12 E.G.R. heatshield
1 Heatshield
2 Retaining nut
3 Retaining screws
4 Distribution pipes

E.G.R. valves - To clean
1. Remove the valves as described in E.G.R. valves - To remove.
2. Using a scraper, remove all carbon film from the valve and mounting flange faces; complete the operation with a wire brush.
3. Clean the carbon from the valves using a wire brush fitted into a portable drill. Take care not to damage the valve seating area.
4. Thoroughly blow out the valves with compressed air to ensure that all loose carbon particles are removed.
5. Upon completion of the cleaning operations, fit the valves to the engine mounting flange as described in E.G.R. valves - To fit.

E.G.R. valves - To check
The E.G.R. system is automatically controlled by exhaust backpressure to maintain a constant E.G.R. proportion over normal road load conditions. Checks to ensure the correct operation of the valves are only required under no load conditions as follows.
1. Connect an electric impulse tachometer to the engine in accordance with the manufacturer's instructions.
2. Ensure that the parking brake is firmly applied and that the gear range selector is in the Park position.
3. Ensure that the pressure tapping cap fitted to the weakening device is correctly tightened.
Start and run the engine until normal operating temperature is attained.
4. Ensure that the engine has run for at least 25 mins. after the engine coolant thermostat has opened.
5. Allow the engine to return to the idle speed.
6. Increase the engine speed slowly noting the operation of the E.G.R. valves.
7. The E.G.R. valves should commence to open between 800 r p.m. and 1 100 r.p.m.
If the valves either fail to open or open late check for the following possible causes.
a. Failed E.G.R. cut-out switch (see Section U7).
b. Failed E.G.R. cut-off solenoid (see Section U7)
c. Failed E.G.R. full throttle cut-out micro-switch (see Section U7).
d. Leak or blockage in the carburetter signal pipe to weakening device cut-off solenoid.
e. Leak or blockage in the E.G.R. valve signal pipe or hose from the E.G.R. cut-out solenoid to the E.G.R. valves.
f. Advanced ignition timing (see Section U6).
If the valves begin to open early check for the following possible cause.
a. Retarded ignition timing (see Section U6).
8. If the E.G.R. valves do not function correctly after carrying out Operations 1 to 7 inclusive, replace the offending valves with new units.
9. Carry out Operations 1 to 7 inclusive.

E.G.R. feed pipe (see Fig. U5)
The E.G.R. feed pipe conveys exhaust gas that is to be recirculated from the exhaust balance pipe to the exhaust gas recirculation valves.

E.G.R. feed pipe - To remove
1. Unscrew the two 7/16in. A/F nuts from the clamp at the upper end of the feed pipe (see Fig. U11).
2. Collect the two washers and 'split' the clamp from the spherical joint.
3. Repeat Operations 1 and 2 on the lower joint adjacent to the exhaust system balance pipe.

E.G.R. feed pipe - To fit
Fit the E.G.R. feed pipe by reversing the procedure given for removal, noting the following.
1. Ensure that the joint faces are clean and free from carbon deposits.

E.G.R. valves heatshield - To remove (see Fig. U12)
1. Slacken the two forward ½ in. A/F nuts one on either side of the mounting flange.
2. Unscrew and remove the two 7/16in. A/F set-screws retaining the heatshield to the rear of 'B' bank air horn; collect the washers.
3. Ease the assembly forward to release the heatshield slots from the retaining studs.
4. Withdraw the heatshield.

E.G.R. valves heatshield - To fit
Fit the heatshield by reversing the procedure given for removal.

Printed in England
© Rolls-Royce Motors Limited 1978
January 1978
T.S.D. 4200
(Australia)

Printed in England

© Rolls-Royce Motors Limited 1978

January 1978

T.S.D. 4200
(Australia)

Section U3

Fuel evaporative emission control system

The Fuel Evaporative Emission Control System eliminates direct venting of the fuel system, thus preventing the release of unburnt hydrocarbons into the atmosphere.

Vapour from the fuel system is collected and stored in a charcoal filled canister. The canister is purged whenever the engine is running and the stored fuel vapour is extracted from the charcoal and burnt in the engine.

The system is illustrated in Figure U13 and comprises the following main components.

Canister (see Fig. U14)
Carbon granules (charcoal)
Float chamber connection
Fuel tank connection
Polyurethane air filter
Purge line connection
Weakening device connection

Fuel tank (see Fig. U16)
Combined pressure/vacuum relief valve
Expansion tank
Fuel trap assembly

Purge line (see Fig. U13)
Air filter
Restrictor

Weakening device (see Figs. U23 and U24)
Adjustable orifice
Air filter
Anti 'run-on' solenoid
Cut-off solenoid
Cut-out switch
Float chamber drain valve
Float chamber vent valve
Fuel receiver chamber
Non-return valves
Venturi chamber

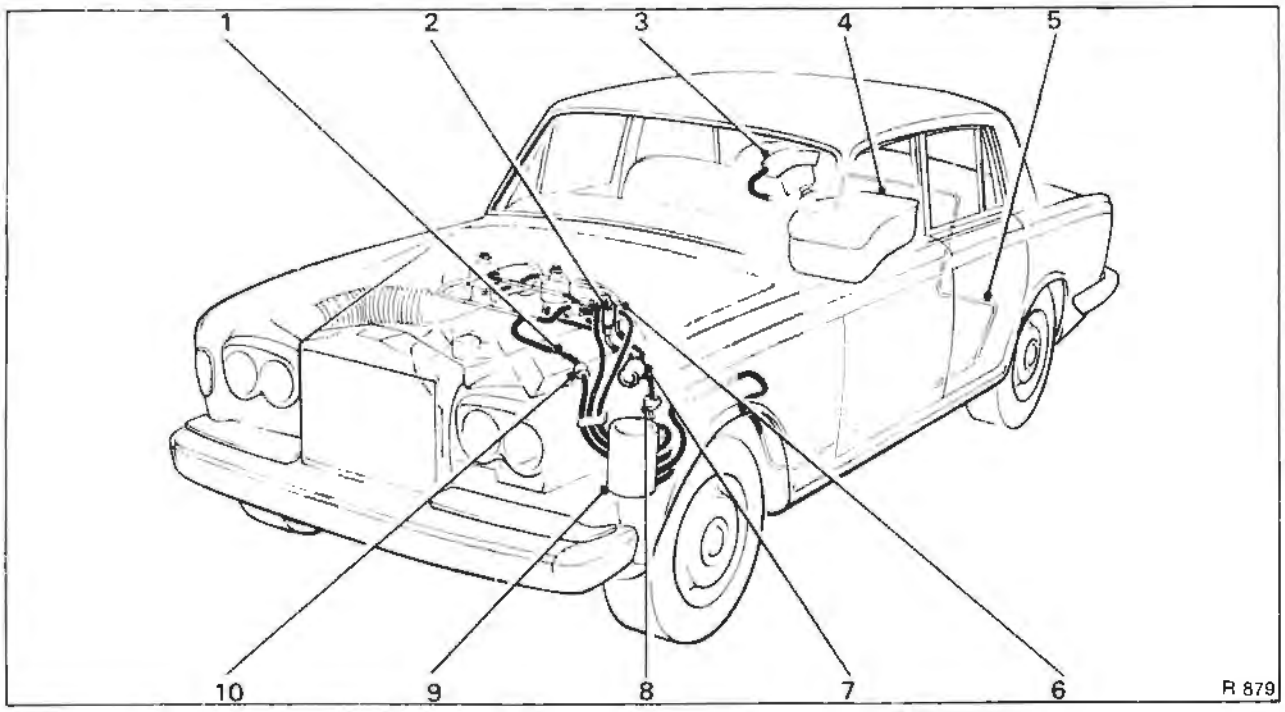

Fig. U13 Fuel evaporative emission control system

1 Purge line restrictor
2 Float chamber vent valve
3 Fuel trap assembly
4 Fuel tank
5 Fuel vapour line
6 Weakening device
7 Weakening device filter
8 Float chamber drain valve
9 Evaporative loss control canister
10 Purge line filter

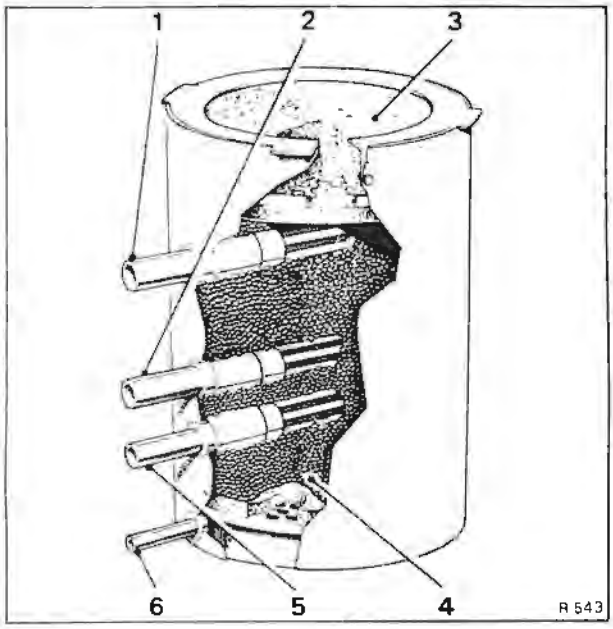

Fig. U14 Control canister
1 Weakening device connection
2 Float chamber vent connection
3 Polyurethane filter
4 Carbon
5 Fuel tank vent connection
6 Purge line connection

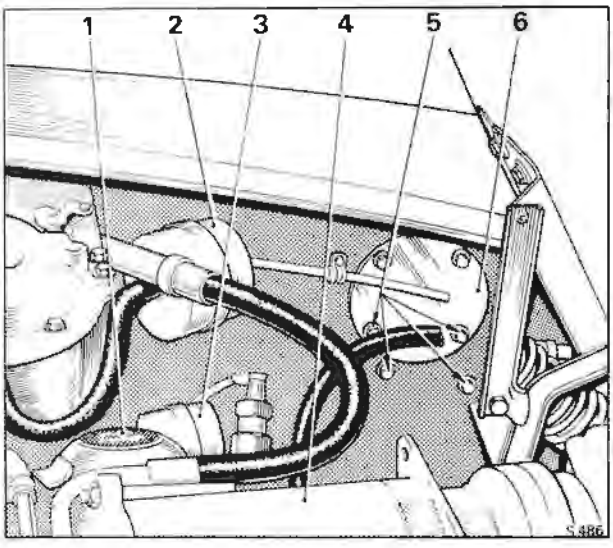

Fig. U15 Foam filter access cover, purge line filter and weakening device filter
1 Engine oil filler cap
2 Weakening device filter
3 Purge line filter
4 Refrigeration compressor
5 Canister securing setscrews
6 Foam filter access cover

For details of the servicing and maintenance requirements of the Fuel Evaporative Emission Control System, refer to the Service Schedules Manual - T.S.D. 4117.

Control canister (see Figs. U13 and U14)
The evaporative emission control canister is situated under the left-hand front wing. It is a cylindrical container filled with activated carbon granules which adsorb and retain fuel vapour. There are connections for the mixture weakening device vent, the fuel receiver vent, the fuel tank vent and the purge line. The top of the canister is open to atmosphere and contains a Polyurethane foam filter element.

When the engine is running air is drawn from the atmosphere through the foam filter element and carbon granules to the lowest connection on the canister. The air, containing fuel vapour from the carbon granules then passes into the engine via the purge line.

Control canister - To remove
1. Remove the front left-hand road wheel as described in Chapter R.

Note
Left-hand is determined when viewed from the driver's seat.

2. Remove the front section of the underwing sheet by unscrewing the small screws situated around the outer edge of the sheet. Resistance may be experienced when the sheet is being freed, as it is sealed around the edge with Bostik Sealing Compound 771.
3. The canister will be clearly visible towards the front of the vehicle.
4. Using the special pliers (RH 8090), remove the steel retaining clips from the four hose connections to the canister. Label the hoses to facilitate identification and withdraw the four hoses from the canister.
5. Raise the bonnet and from inside the engine compartment locate the canister foam filter access cover (see Fig. U15).
6. Unscrew and remove the four setscrews indicated as securing setscrews in Figure U15. Before removing the final setscrew support the control canister.
7. Withdraw the canister from beneath the wing.

Control canister - To fit
Fit the canister by reversing the procedure described for removal, noting the following points.
1. Ensure that the rubber hoses are in a good condition and new hose retaining clips are fitted.
2. Ensure that the underwing sheet is sealed with Bostik Sealing Compound 771.

Polyurethane foam filter element - To renew
It is not necessary to remove the canister from the car in order to extract the polyurethane foam filter element. A detachable cover is situated in the left-hand valance (see Fig. U15).

1. Unscrew the four screws retaining the access cover, lift off the cover and withdraw the filter element from the top of the canister.

When fitting a new element, ensure that it is correctly positioned inside the retaining rim of the canister. Fit the access cover and tighten the setscrews.

Fuel tank assembly
The fuel tank assembly comprises the fuel tank, the expansion tank and the fuel trap assembly (see Fig. U16).

The fuel tank is vented from three positions to the fuel trap assembly which is mounted above the fuel filler. One vent is from the fuel filler neck and the others are from the fuel tank.

The three vent lines join at a common junction block situated adjacent to the fuel filler neck, the main vent line then passes to the fuel trap assembly.

From the fuel trap a vent line passes under the floor of the car to the evaporative loss control canister.

The fuel trap assembly acts as a liquid separator and prevents liquid fuel from being transferred to the evaporative loss control canister under severe driving manoeuvres when the fuel tank is full or during expansion of the fuel at high ambient temperatures.

A combined relief and vacuum valve fitted into the end of the fuel trap assembly prevents an excessive pressure 'build up' in the fuel tank due to vapourisation or depression (as fuel is consumed), in the event of a blockage in the vent line to the evaporative loss control canister.

Included in the main fuel tank is a small expansion tank (see Fig. U16) of 3,125 litres (5.5 Imp. pt. — 6.7 U.S. pints) capacity. The expansion tank inhibits complete filling of the main fuel tank and provides additional fuel expansion volume to contend with extreme temperature conditions.

When the car is being filled with fuel, the main fuel tank (without an expansion tank) could normally be completely filled, leaving only the filler neck, vent connector pipes and fuel trap assembly to accommodate the expansion of the fuel. An expansion tank is therefore situated in the upper part of the main fuel tank and as the fuel level rises above the lower part of the assembly it flows inside through two small holes in the base. Two additional holes in the top of the expansion tank allow air to escape.

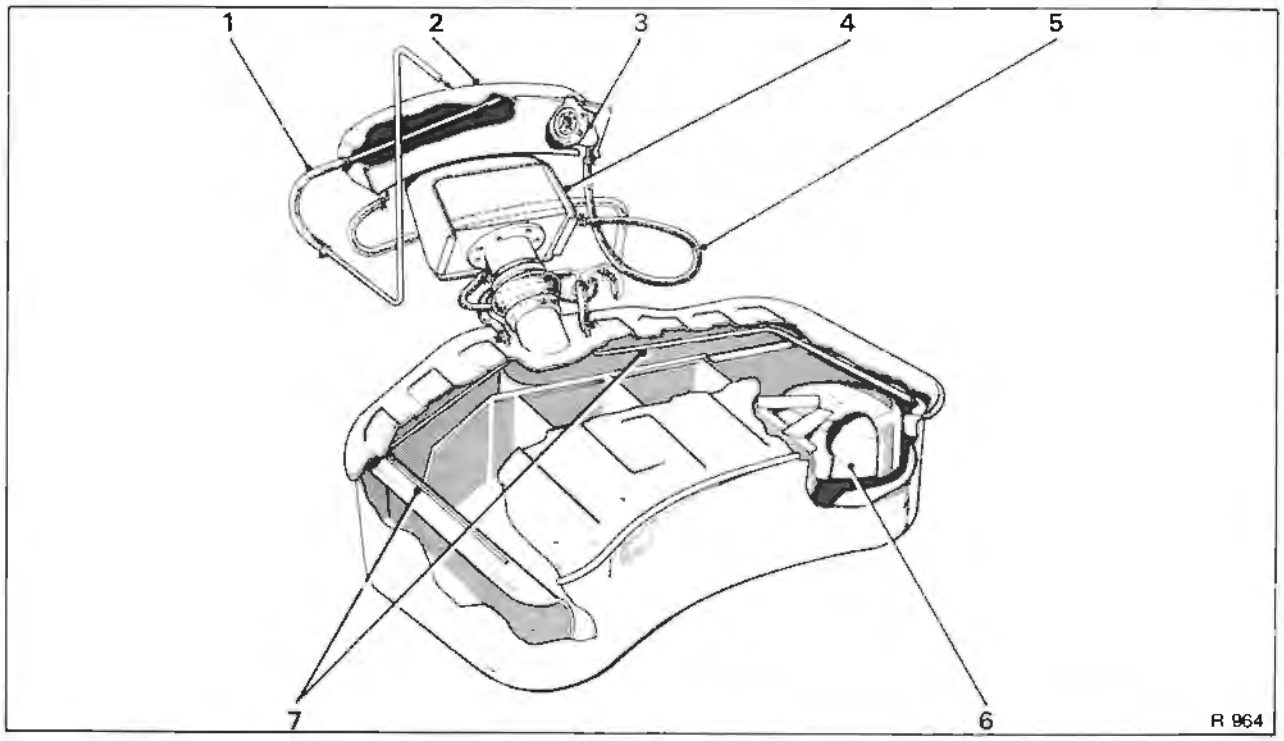

Fig. U16 Fuel tank
1 Fuel vapour line
2 Fuel trap assembly
3 Combined relief and vacuum valve
4 Fuel filler box
5 Relief valve vent
6 Expansion tank and overfill limiter
7 Vent pipes

Printed in England
© Rolls-Royce Motors Limited 1978
January 1978
T.S.D. 4200 (Australia)

Fuel tank - To remove

1. Carry out the usual workshop safety precautions.
2. Disconnect the battery.
3. Drain the fuel from the tank.
4. Remove the carpet and underlay from the luggage compartment floor to reveal the fuel tank (see Fig. U17).
5. Unscrew the four screws securing the circular metal cover over the float assembly (see Fig. U17); withdraw the cover.
6. Disconnect the three electrical leads from the float assembly (see Fig. U18); tape the loom away from the vacinity of the fuel tank.
7. Using the special pliers (RH 8090) remove the steel clip from the rubber hose situated one on either side of the fuel tank filler (see Fig. U19).

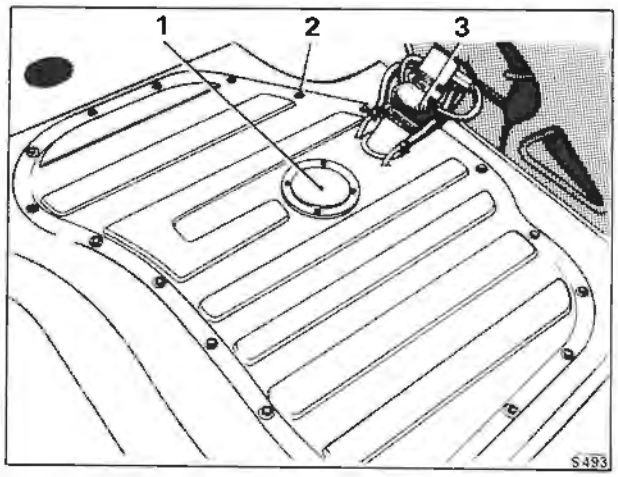

Fig. U17 Fuel tank installation
1 Float assembly cover
2 Fuel tank securing setscrews
3 Fuel filler assembly

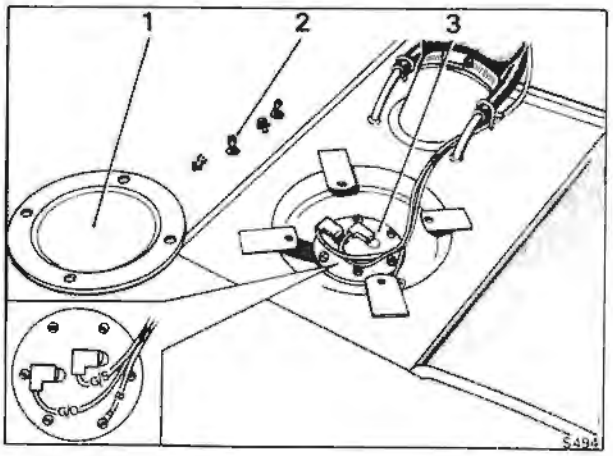

Fig. U18 Float assembly
1 Cover
2 Cover securing screws
3 Float assembly

8. Unscrew the worm drive clips securing the convoluted rubber filler hose to the filler box and tank filler connections; detach the convoluted hose from the fuel tank and blank off both open ends of the connection.
9. From under the car, unscrew the adapter securing the fuel feed pipe to the fuel tank (see Fig. U20), blank off both open ends of the connection.
10. Inside the luggage compartment, unscrew the $\frac{7}{16}$in. A/F setscrews situated around the fuel tank.
11. Carefully 'break' the seal between the fuel tank and the luggage compartment.
12. Withdraw the fuel tank by lifting it out through the luggage compartment.

Fuel tank - To fit

Fit the fuel tank assembly by reversing the procedure given for removal, noting the following points.
1. Apply a sealant such as 'Glasticon' to the luggage compartment floor around the area of the fuel tank securing setscrew holes (this area is used for seating the lip of the fuel tank), to provide a good seal when the fuel tank assembly is installed.
2. Ensure that all rubber hoses are in a good condition.
3. Always fit new steel clips to retain the various vent hoses.
4. After fitting the fuel tank, ensure that the adapter securing the feed pipe does not leak fuel with the fuel pumps operating.

Fuel trap assembly - To remove

1. Disconnect the battery and ensure that the usual workshop safety precautions are carried out.
2. Remove the carpet and underlay in the luggage compartment.
3. Remove the tool kit.
4. Remove the fuel filler door release ring.
5. Unscrew the five 'Phillips' headed screws from the side carpet; four secure the brackets retaining the tool kit and the fifth is positioned at the front of the side carpet.
6. Release the 'Tenax' clip situated adjacent to the rear lamps access point.
7. Remove the side carpet and the carpet covering the fuel filler neck. The carpet panel covering the filler neck is retained by a setscrew at the top (accessible from within the fuel filler box) and a small screw at the rear (that screws into the luggage compartment floor).
8. Using special pliers (RH 8090) remove the steel clips from the rubber hoses. Withdraw the hoses from their respective pipes.
9. Locate the electric loom that is fitted adjacent to the fuel trap assembly (see Fig. U21). Straighten the three clips securing the loom in the vacinity of the fuel trap assembly.

Gradually ease the loom in a downwards direction until it lies as shown in Figure U21; in this position the loom will not impede the removal of the fuel trap.

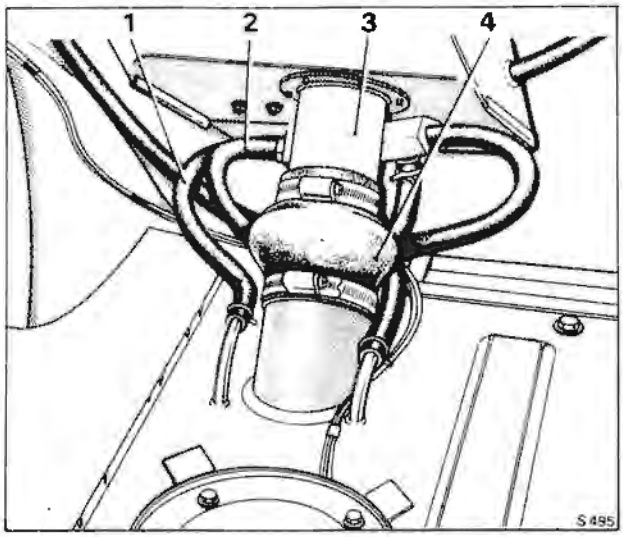

Fig. U19 Fuel filler assembly
1 Vent - Tank to junction block
2 Vent - Filler to junction block
3 Metal filler pipe
4 Convoluted filler hose

10. Unscrew and remove the three 2 B.A. setscrews securing the fuel trap assembly.
11. Slowly move the fuel trap rearward and downward until the lower end can be turned into the luggage compartment and the assembly withdrawn from the car.

Fuel trap assembly - To fit
Fit the fuel trap assembly by reversing the procedure given for its removal noting the following points.
1. Ensure that the rubber hose connections are in good condition.
2. Ensure that new steel retaining clips are used.

Fuel trap relief and vacuum valve - To remove
1. Remove the fuel trap assembly as described in Fuel trap assembly - To remove.
2. Unscrew the retaining setscrews, taking care not to lose the washers.
3. Withdraw the relief and vacuum valve.

Fuel trap relief and vacuum valve - To fit
Fit the relief and vacuum valve by reversing the procedure given for its removal noting the following points.
1. Ensure that the joint faces of the relief and vacuum valve and fuel trap assembly are clean and in good condition.
2. Fit a new gasket.

Fuel filler - To remove
1. Refer to Fuel trap assembly - To remove and carry out Operations 1 to 8 inclusive.
2. From inside the luggage compartment unscrew and remove the metal connection for the vent hose situated half-way up the metal filler pipe.
3. Unscrew the worm drive clips securing the convoluted rubber hose.
4. From inside the filler box remove the screws securing the filler assembly to the body.
5. Withdraw the metal filler assembly.

Fuel filler - To fit
Fit the fuel filler by reversing the procedure given for removal, noting the following points.
1. Fit new gaskets if necessary.

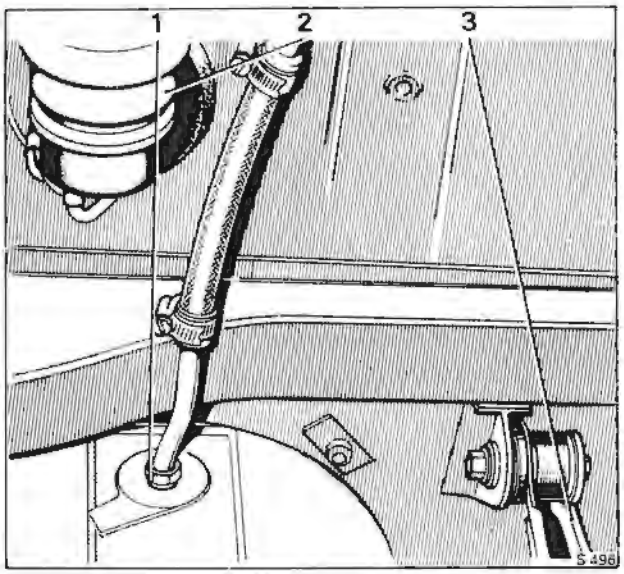

Fig. U20 Fuel feed pipe
1 Adapter - Fuel tank to feed line
2 Fuel pump
3 Spare wheel carrier pivot

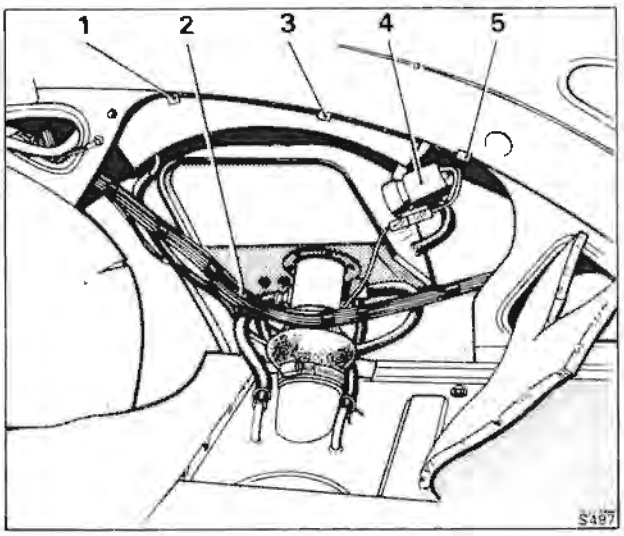

Fig. U21 Fuel trap removal/fitting
1 Loom retaining clip
2 Loom
3 Loom retaining clip
4 Fuel filler door release solenoid
5 Loom retaining clip

Printed in England
© Rolls-Royce Motors Limited 1978
January 1978
T.S.D. 4200
(Australia)

Fuel evaporative emission control system - To leak check

Whenever the various pipes, hoses and components of the fuel evaporative emission control system are disturbed, the system should be checked for air leaks upon assembly.

To test the system proceed as follows.

1. Position the vehicle on a ramp and carry out the usual safety precautions (i.e. ensure that the gear range selector lever is in 'Park' position, the parking brake firmly applied, the engine switched off, etc.,). Raise the ramp.
2. Remove the left-hand horn assembly (left-hand is decided when standing under the vehicle, looking towards the front), see Chapter M.
3. Through the resultant gap between the front wing and wing sheet, locate the emission control canister and identify the hose connection from the fuel tank (second from the bottom).
4. Using the special pliers (RH 8090), remove the steel retaining clip from the fuel tank connection hose at the control canister.
5. The fuel tank hose should be detached from the canister and connected to the test equipment (see Fig. U22).
6. Apply air pressure to the fuel tank hose via the test equipment until a reading of 38 cm. (15 in.) H_2O is attained and close the pressure supply.

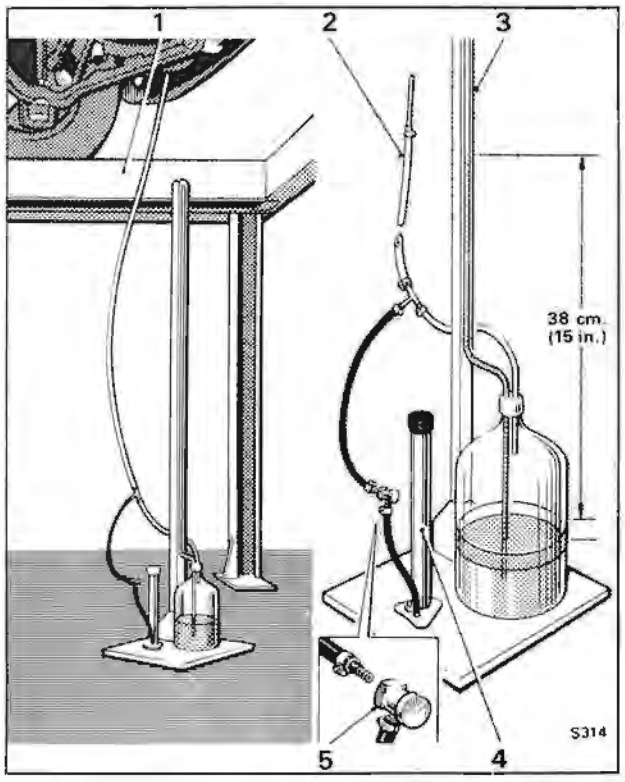

Fig. U22 Leak check test equipment

1 Ramp
2 Connection to fuel tank/canister hose
3 Test equipment
4 Pump
5 One way pressure valve

7. After 5 minutes again check the pressure reading, this should not have fallen by more than 12,7 mm. (0.5 in.).
8. If the pressure drop is more than 12,7 mm. (0.5 in.), progressively treat all joints in the system with soap solution to detect air leaks.
9. Rectify any air leaks and again leak check the system.
10. When the system is satisfactory, detach the test equipment and connect the hose to the control canister, secure with a new steel retaining clip.
11. Fit the left-hand horn assembly as described in Chapter M.

Purge line

The purge line consists of a rubber hose, passing from the lowest connection on the canister through the valance junction piece to the induction manifold connection on the opposite side of the engine (see Fig. U13). Incorporated into this hose is the purge line filter and restrictor.

When the engine is running, air drawn through the canister filter and carbon picks up the stored fuel vapours and passes them via the hoses, to the induction system at a point just below the choke housing. The restrictor in the line controls the flow rate at between 1,41 cu.m. per hr. and 1,98 cu.m. per hr. (50 cu.ft. per hr. and 70 cu.ft. per hr.) to maintain carburetter metering accuracy and the paper element line filter is fitted to prevent blockage of the restrictor.

Purge line filter

The purge line filter is situated on the left-hand valance just forward of the front road spring pot (see Fig. U15). The air filter assembly is a sealed unit and no attempt should be made to clean the element.

At the mileage intervals specified in the Service Schedules the purge line filter should be removed and a new assembly fitted as follows.

Purge line filter - To remove

1. Using the special pliers (RH 8090) remove the two steel retaining clips situated one on either side of the filter assembly.
2. Detach the inlet and outlet hoses.
3. Slacken the small setscrew that secures the clamp bracket around the filter assembly.
4. Swivel the clamp bracket to enable the filter assembly to be withdrawn.

Purge line filter - To fit

Fit the purge line filter by reversing the procedure given for removal, noting the following points.

1. Ensure that the filter assembly is fitted the correct way around; the word 'IN' moulded into the end of the casing should be towards the front of the vehicle.
2. Ensure that the rubber hoses are in a good condition and that new hose retaining clips are used.

Purge line restrictor
The purge line restrictor is situated in the purge line between the air filter and the induction manifold connection (see Fig. U13). The function of the restrictor is to maintain the air flow through the purge line within predetermined limits.

Purge line restrictor - To remove
1. Hold the restrictor firmly and slide the rubber hosing from both ends.

Purge line restrictor - To fit
Fit the restrictor by reversing the procedure given for removal, noting the following point.
1. Ensure that the purge line restrictor is fitted into the line correctly. This can be determined by comparing the diameters of the restrictor ends with those of the rubber hoses.

Purge flow rate - To check
1. Disconnect the hose from the engine side of the purge line filter and insert a flowmeter assembly (RH 8725) into the line between the filter and the restrictor. The flowmeter is a rotameter type capable of measuring between 1,4 cu.m/hr. and 2,0 cu.m/hr. (50 cu.ft/hr. and 70 cu.ft/hr.). The pressure drop across the meter must not exceed 5,08 cm.Hg. (2.0 in.Hg.).
2. Start and run the engine at 650 r.p.m.; the reading on the flowmeter should be between 1,41 cu.m/hr. and 1,99 cu.m/hr. (50 cu.ft/hr. and 70 cu.ft/hr.).
3. If the flow is less than the minimum figure quoted in Operation 2, stop the engine and substitute the purge line restrictor with a straight piece of metal pipe having an internal diameter larger than 4,76 mm. (0.187 in.).
4. Start and run the engine at 650 r.p.m.; the reading on the flowmeter should be in excess of 1,99 cu.m/hr. (70 cu.ft/hr.).
5a. If the flowmeter reading is above 1,99 cu.m/hr. (70 cu.ft/hr.) fit a new purge line restrictor and repeat Operation 2.
b. If the flowmeter reading is below 1,99 cu.m/hr. (70 cu.ft/hr.) the cause could be as follows.
(i) An air leak in any of the vacuum hoses that connect to the induction manifold connection (vacuum manifold).
(ii) A blockage in the vacuum manifold or any of the connecting hoses.

Any leaks or blockages should be rectified; the restrictor should be fitted and Operation 2 repeated. If the flow rate is still incorrect fit a new restrictor and again, repeat Operation 2.
6. Remove the test equipment and connect the hose to the purge line filter.

Weakening device
The mixture weakening device (see Fig. U23) is fitted adjacent to 'B' bank carburetter and incorporates a fuel receiver.

For any given position of the fuel metering needle, the rate of the discharge from the carburetters is governed by the difference in air pressure existing over the fuel in the float chamber and that over the jet.

The weakening device is designed to reduce the air pressure (create a depression) in the float chamber at part throttle, thereby reducing the rate of discharge from the jet.

The weakening device housing contains two chambers, (see Fig. U24), the venturi chamber, and the fuel receiver chamber, the two being interconnected by a passage and an adjustable venturi.

The venturi chamber is connected to a small drilling on the edge of the butterfly plates of both carburetters via the weakening device solenoid valve, with the throttle slightly open the drillings are subjected to manifold depression thus creating a depression in the venturi chamber which draws air from the weakening device air filter. This depression is also apparent in the fuel receiver chamber and subsequently in the carburetter float chambers.

The value of the depression is set by the position of the weakening device adjusting screw.

To obtain adequate float chamber venting to cope with hot soak conditions there is an additional vent from the fuel receiver. This incorporates a low pressure non-return valve to maintain float chamber depression under normal running conditions. In addition to this valve, a one-way valve is fitted into the venturi chamber to prevent any evaporating fuel being discharged to atmosphere.

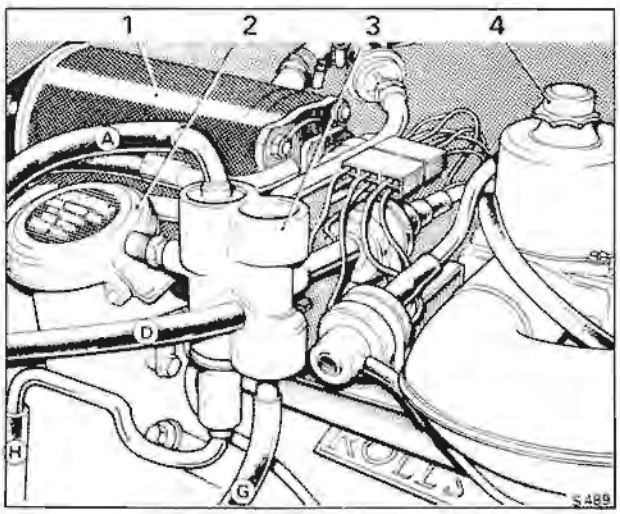

Fig. U23 Position of mixture weakening device
1 Refrigeration compressor
2 Engine oil filler
3 Mixture weakening device
4 'B' bank carburetter

Printed in England
© Rolls-Royce Motors Limited 1978
January 1978
T.S.D. 4200 (Australia)

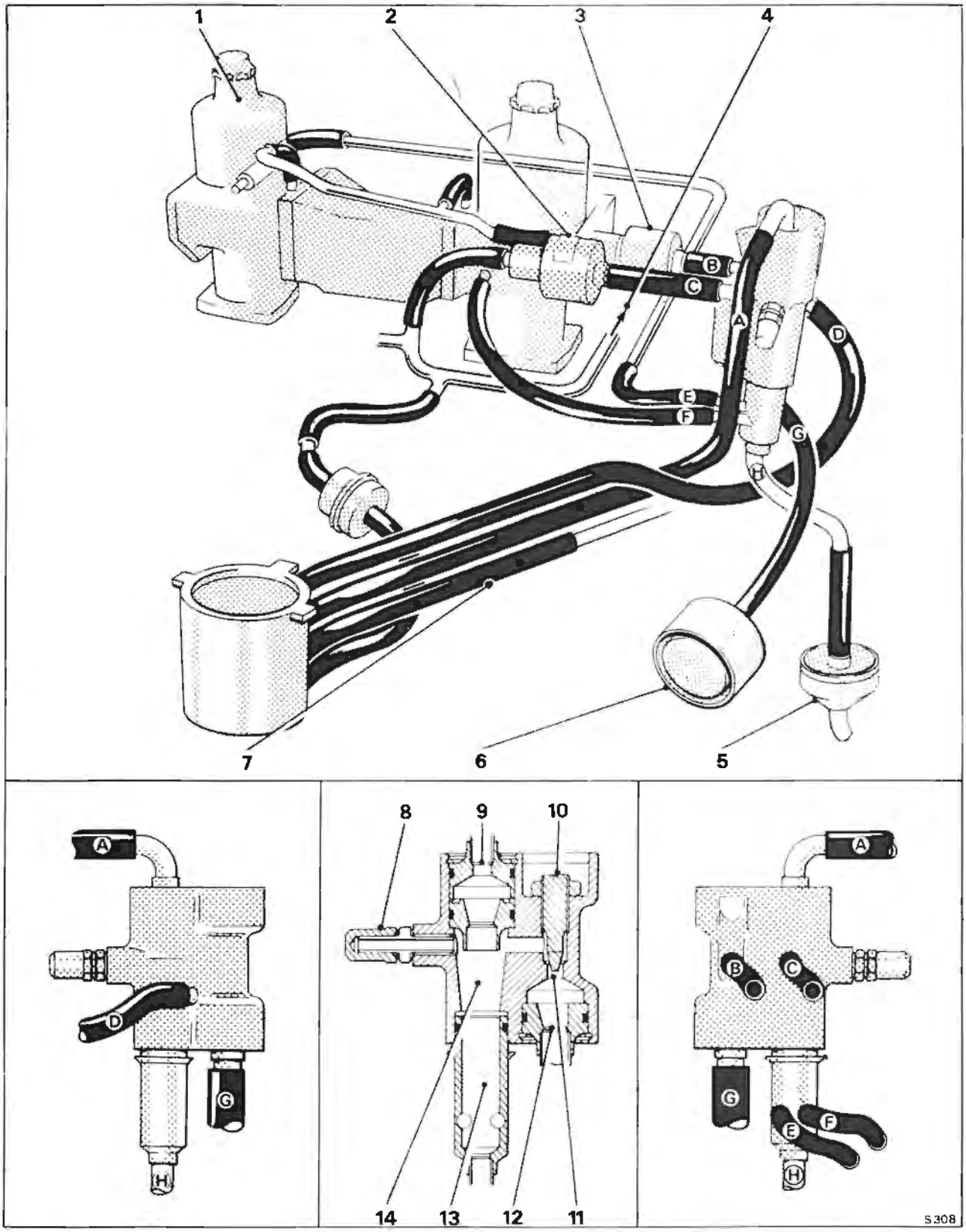

Fig. U24 Mixture weakening device

1	'A' bank carburetter	5	Float chamber drain valve	10	Adjusting screw
2	Anti 'run-on' solenoid	6	Weakening system air filter	11	Venturi chamber
3	Weakening device cut-off solenoid	7	Vent from fuel tank	12	Air intake valve
		8	Weakening device signal cap	13	Fuel receiver
4	Induction manifold connection	9	Float chamber vent valve	14	Fuel receiver chamber

A float chamber drain, also incorporating a low pressure non-return valve is mounted at the front of the engine adjacent to the oil filter, this valve is connected to the fuel receiver. Should flooding occur the head of fuel in the receiver is sufficient to open the drain valve thus preventing engine stalling if the float chamber needle valves stick.

Weakening device - To remove
1. Label all hoses connected to the weakening device assembly, this will facilitate assembly.
2. Disconnect all hoses to the weakening device.
3. Unscrew and remove the two small setscrews that retain the weakening device to the solenoid platform; the two screws are situated just below the pipe/hose connections for the anti 'run-on' solenoid and weakening device cut-off solenoid.
4. Withdraw the weakening device.

Weakening device - To fit
Fit the weakening device by reversing the procedure given for removal, noting the following point.
1. Ensure that all hoses connecting to the assembly are in a good condition and that all connections are 'air tight'.

Weakening device - To dismantle (see Fig. U24)
1. Remove the weakening device from the vehicle.
2. Remove the small screw that secures the fuel receiver assembly into the base of the weakening device, withdraw the assembly.
3. Unscrew the weakening device signal cap, collect the cap fibre washer. Unscrew the signal line adapter from the casting and withdraw the aluminium washer from the adapter.
4. Remove the circlip from the top of the fuel receiver chamber, withdraw the float chamber vent pipe (slight resistance may be felt due to the rubber sealing ring). With a soft drift (e.g. wooden pencil), push the float chamber vent valve out of the weakening device assembly (the drift is required because the rubber sealing ring fitted around the vent valve will cause a small resistance).
5. Remove the circlip from the base of the venturi chamber, withdraw the **air intake pipe** containing a one-way valve (slight resistance may be felt due to the rubber sealing ring).
6. Remove the **anti-tamper cover** from the top of the venturi chamber, unscrew the lock-nut and using a screwdriver unscrew the **adjusting screw.**

Weakening device - To assemble
To assemble the weakening device, reverse the procedure given for removal, noting the following.
1. Ensure that all components are clean before assembly.
2. Ensure that the rubber sealing rings are in a good condition and lightly smeared with the minimum amount of grease. Ensure that no grease is applied to the valves otherwise a malfunction may occur due to the grease making the valves stick.
3. After assembly, the operator should check that he can blow but not suck on the metal pipes, one on top of the fuel receiver chamber and the other at the bottom of the venturi chamber.

Weakening device signal strength - To check
The **float chamber depression** should be checked as follows.
1. Start and run the engine until normal setting conditions are attained (i.e. engine cooling system thermostat opened, air conditioning unit switched off and the automatic choke is off).
2. Stop the engine.
3. Connect an electric impulse tachometer to the engine in accordance with the manufacturer's instructions.
4. Disconnect the E.G.R. cut-off solenoid to carburetter signal pipe hose at the solenoid and blank off the hose.
5. Unscrew and remove the weakening device signal cap and connect a 0 to 15,5 cm. (0 to 6 in.) water manometer to the weakening device adapter.
6. Start and run the engine at 2 000 r.p.m. in 'Park' until a steady manometer reading is obtained, this should be 5,08 cm. (2.0 in.) of water depression.

A low or zero reading may be caused by
a. A blockage in the weakening device venturi to the weakening device cut-off solenoid.
b. A blockage or restriction in the signal pipe(s).
c. An air leak in the hoses or pipes from the float chambers to the emission control canister.
d. Faulty float chamber vent valve or drain valve.
e. Low engine temperature below 14°C. (57° F.) a faulty weakening device solenoid or weakening device switch.

A high reading may be caused by
a. An obstruction in the weakening device bleed orifice (weakening device signal strength adjusting screw).
b. Obstructed weakening device air filter or evaporative loss control canister.
c. Incorrect connection or blockage in the weakening device to either the valance connection or the evaporative loss control canister.
d. Weakening device air intake valve sticking closed.
e. Obstructed weakening device air filter hose.
f. Incorrect operation of anti 'run-on' solenoid.
7. If the float chamber depression is still incorrect after checking through the possible causes in Operation 6, set the weakening device signal strength (float chamber depression) by unlocking and turning the adjusting screw (see Fig. U24) until the correct manometer reading is obtained. Turning the adjusting screw clockwise increases the depression.
8. Remove the blank from the E.G.R. cut-off solenoid to signal pipe hose and connect the hose to the solenoid.

Printed in England
© Rolls-Royce Motors Limited 1978
January 1978
P.S.D. 4200 (Australia)

9. Raise the engine speed slowly noting both the manometer and tachometer readings. The maximum steady manometer reading should be obtained between 1 200 r.p.m. and 1 500 r.p.m.
10. Allow the engine speed to return to the idle setting (650 r.p.m.) and check the float chamber depression reading on the manometer.
If the float chamber depression at idle speed is above 10,16 mm. H_2O (0.4 in. H_2O) check the ignition timing at idle as this condition may result in unsatisfactory driveability.
11. Fit the tamperproof cover into the top of the venturi chamber.

Weakening device air filter - To remove
The air filter container is mounted on the left-hand valance just forward of the road spring pot (see Fig. U15).

This is a sealed unit and no attempt should be made to clean the element.

1. To remove the air filter assembly, detach the hose and unscrew the worm drive clip situated around the assembly.
2. Withdraw the assembly.

Weakening device air filter - To fit
Fit the air filter container by reversing the procedure given for removal.

Section U4

Crankcase emission control system

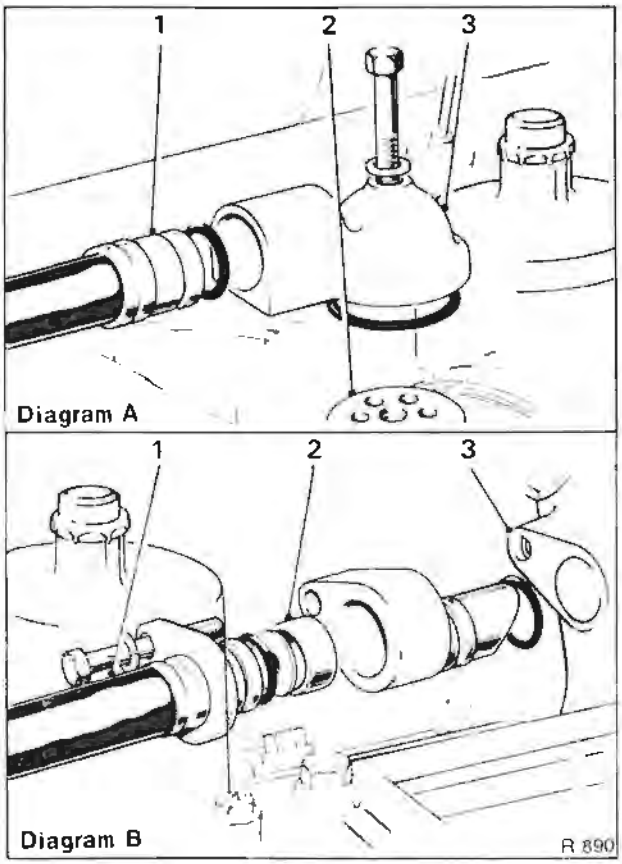

Fig. U25 Crankcase breather pipe connections

Diagram A		Diagram B	
1	Breather tube	1	Breather tube
2	Choke housing	2	Flame trap
3	Breather connection	3	Oil filler housing

Crankcase emissions are controlled by a recirculatory closed breather system.

An insulated draught tube connects the crankcase via the oil filler which is fitted with a sealed cap, to the choke housing upstream of both the choke butterfly and the carburetters. A flame trap capsule containing three wire mesh discs is fitted in a housing at the crankcase end of the draught tube. Engine emission (blow-by) is drawn into the induction system via the draught tube, due to the depression in the choke housing.

1. The flame trap fitted to the breather pipe should be cleaned in the following manner, at the specified mileage.
2. Unscrew the setscrew securing the breather pipe connection to the oil filler pedestal; withdraw the connection from the pedestal (slight resistance may be felt due to the rubber 'O' ring connections).
3. Withdraw the connection from the pipe flange and collect the restrictor.
4. Wash the flame trap assembly in clean petrol, then dry with a high pressure air line. The flame trap assembly consists of 3 gauzes crimped together as shown in Figure U25.
5. To clean the adapter fitted to the choke housing, remove the single setscrew from the breather pipe end connection and detach the pipe.
6. Clean the adapter fitted to the choke housing and ensure that the holes in the adapter are clear.
7. Assembly of the flame trap and breather pipe is in the reverse order, ensuring that the 'O' rings are in good condition.

Printed in England
© Rolls-Royce Motors Limited 1978

Section U5

Carburetters and Automatic choke system

The Carburetter and Automatic Choke System can be seen illustrated in Figure U26 and comprises the following main components.

Automatic choke
'Fast-idle'
Stove pipe
(For the remainder of the Automatic Choke System refer to Chapter K).

Carburetters (see Fig. U28)
Bi-metal jet lever
Carburetter fuel filter
Carburetter idle airflow balance
Float
Float chamber
Float needle
Jet assembly
Jet needle
Overrun valve
Piston
Piston damper
Piston damper retainer (Piston ball race clip)
Suction chamber
Tamperproof caps
Throttle disc
Throttle linkage
Viscosity compensator

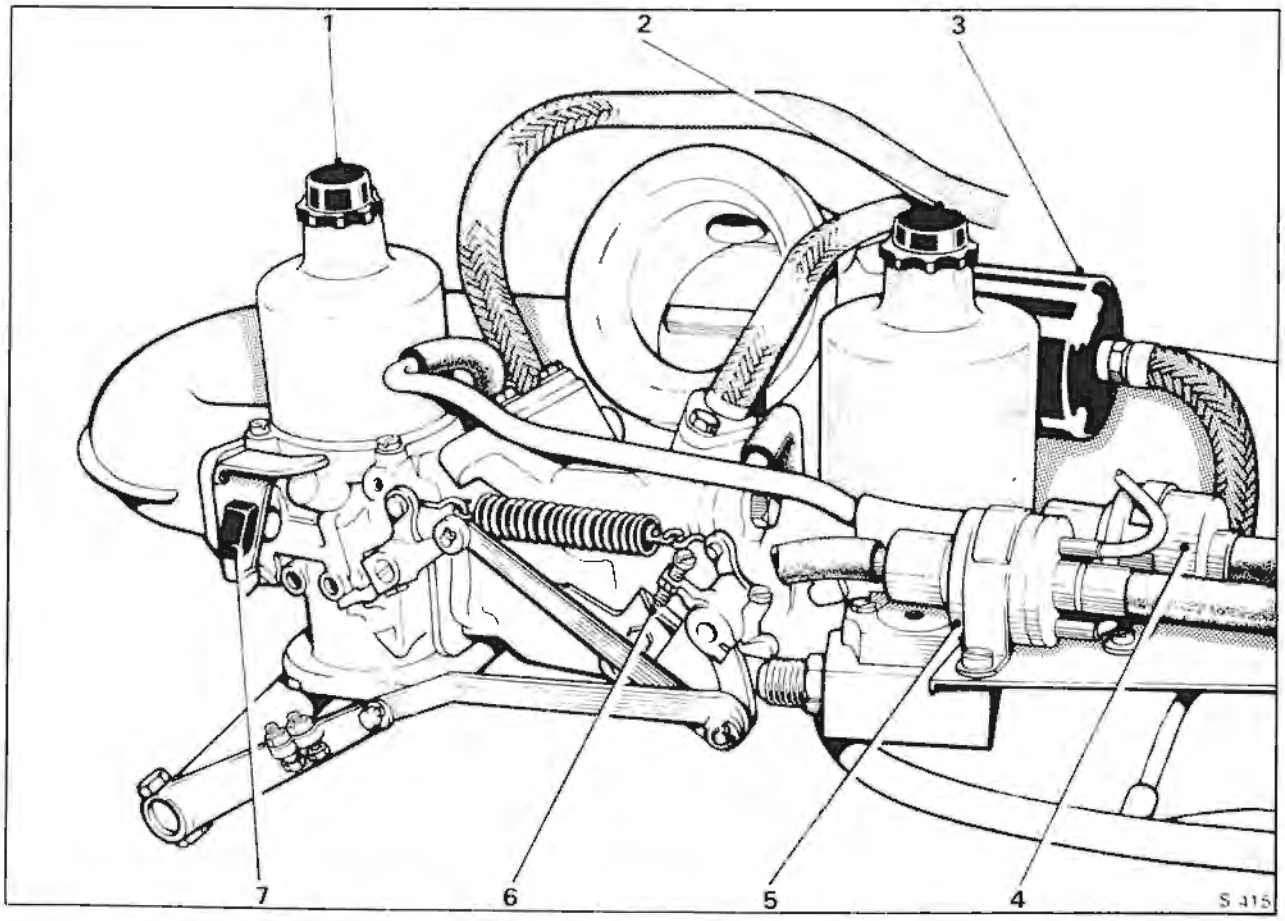

Fig. **U26 Carburetters and linkage**
1 'A' bank carburetter
2 'B' bank carburetter
3 Choke bi-metal housing
4 Weakening system cut-off solenoid
5 Anti 'run-on' solenoid
6 Idle speed adjusting screw
7 E.G.R. full throttle cut-out micro-switch

Printed in England
© Rolls-Royce Motors Limited 1978
October 1978
T.S.D. 4200 (Australia)

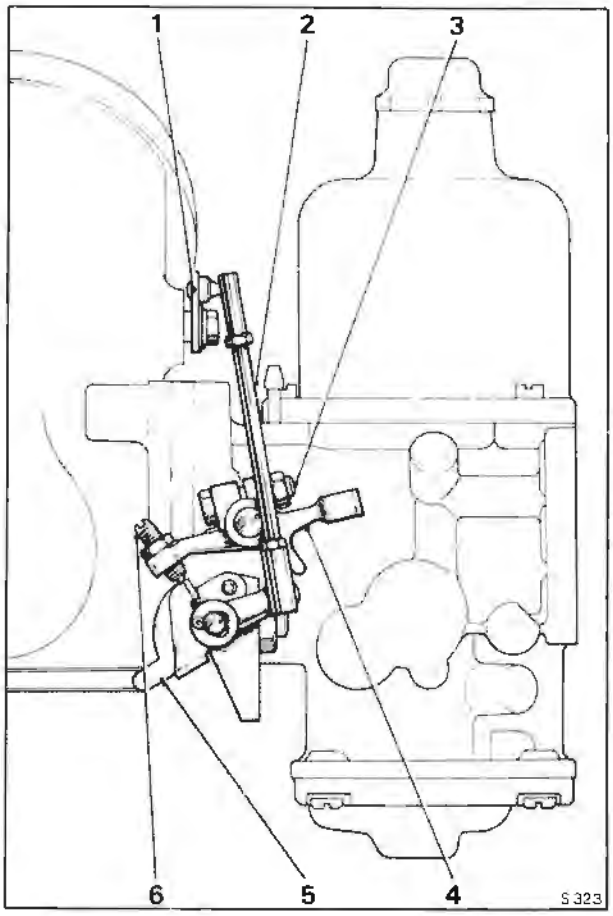

Fig. U27 Fast-idle mechanism
1 Control rod lever
2 Butterfly rod
3 Lever clamp bolt
4 'Fast-idle' lever
5 Cam
6 Adjusting screw

Temperature controlled air intake
Air cleaner/silencer
Air blend valve
Cold air intake
Hot air scoop
Manifold vacuum hose
Resonator
Temperature sensor

Weakening device
(Refer to Section U3).

Automatic choke
All details for the Automatic Choke System are given in Chapter K, except for the checking and setting procedures of the following.

'Fast-idle' - To set
1. Ensure that the usual safety precautions are carried out (i.e. parking brake firmly applied, gear range selector lever in 'Park' etc.) and connect an impulse tachometer in accordance with the manufacturer's instructions.
2. Disconnect the signal hose to the E.G.R. cut-off solenoid (not the hose from the solenoid to the E.G.R. valve), at the solenoid and blank the hose.
3. Remove the pressure tapping cap from the weakening device (see Fig. U24).
4. Open the throttles and close the choke butterfly against the bi-metal tension using control rod lever (item 1 - Fig. U27) until the adjusting screw (item 6 - Fig. U27) is resting on the tip of the fast-idle cam. At this point an extra load will be felt due to the action of the extended fast-idle plunger ceasing.
5. Start the engine, if the speed is outside a range of 850 r.p.m. to 900 r.p.m. stop the engine, open the throttles to gain access to the adjusting screw and turn the screw approximately ¼ turn for each 20 r.p.m. required. Tighten the lock-nut.
6. Start the engine and again check the fast-idle speed.
7. When the engine speed has been adjusted to within the prescribed limits open the throttles to release the fast-idle mechanism.
8. Stop the engine, disconnect the tachometer, remove the blank from the E.G.R. signal hose to the cut-off solenoid and fit the hose to the solenoid. Fit the pressure tapping cap to the weakening device.

Choke stove pipe - To flow check
1. Ensure that the usual safety precautions are carried out (i.e. parking brake firmly applied, gear range selector lever in 'Park' etc.) and connect an impulse tachometer in accordance with the manufacturer's instructions.
2. Start and run the engine until normal operating temperature is attained. Stop the engine.
3. Disconnect the stove pipe union at the intake elbow (see Fig. U42) and connect a flowmeter to the pipe via a connector (RH 8945). The flowmeter must be a rotameter type capable of measuring 2,9 cu.m/hr. (100 cu.ft/hr.).
4. Start and run the engine at idle speed (650 r.p.m.); observe the flowmeter, a correct reading is between 1,41 cu.m/hr. and 1,55 cu.m/hr. (50 cu.ft/hr. and 55 cu.ft/hr.)
5. If the flow is less than 1,41 cu.m/hr. (50 cu.ft/hr.) check the choke stove pipe unions for leaks.
6. If the flow is in excess of 1,55 cu.m/hr. (55 cu.ft/hr.), fit a new restrictor in the choke bi-metal housing (see Chapter K).

Carburetters
Two S.U. HIF7 (Horizontal Integral Float Chamber) carburetters with 4,76 cm. (1,875 in.) choke bores (see Fig. U28) are fitted to the engine on a central 'tee' piece which is mounted over an eight branch induction manifold.

This type of carburetter automatically adjusts both its choke and jet area to meet the demand of the engine which is dependent on engine speed and

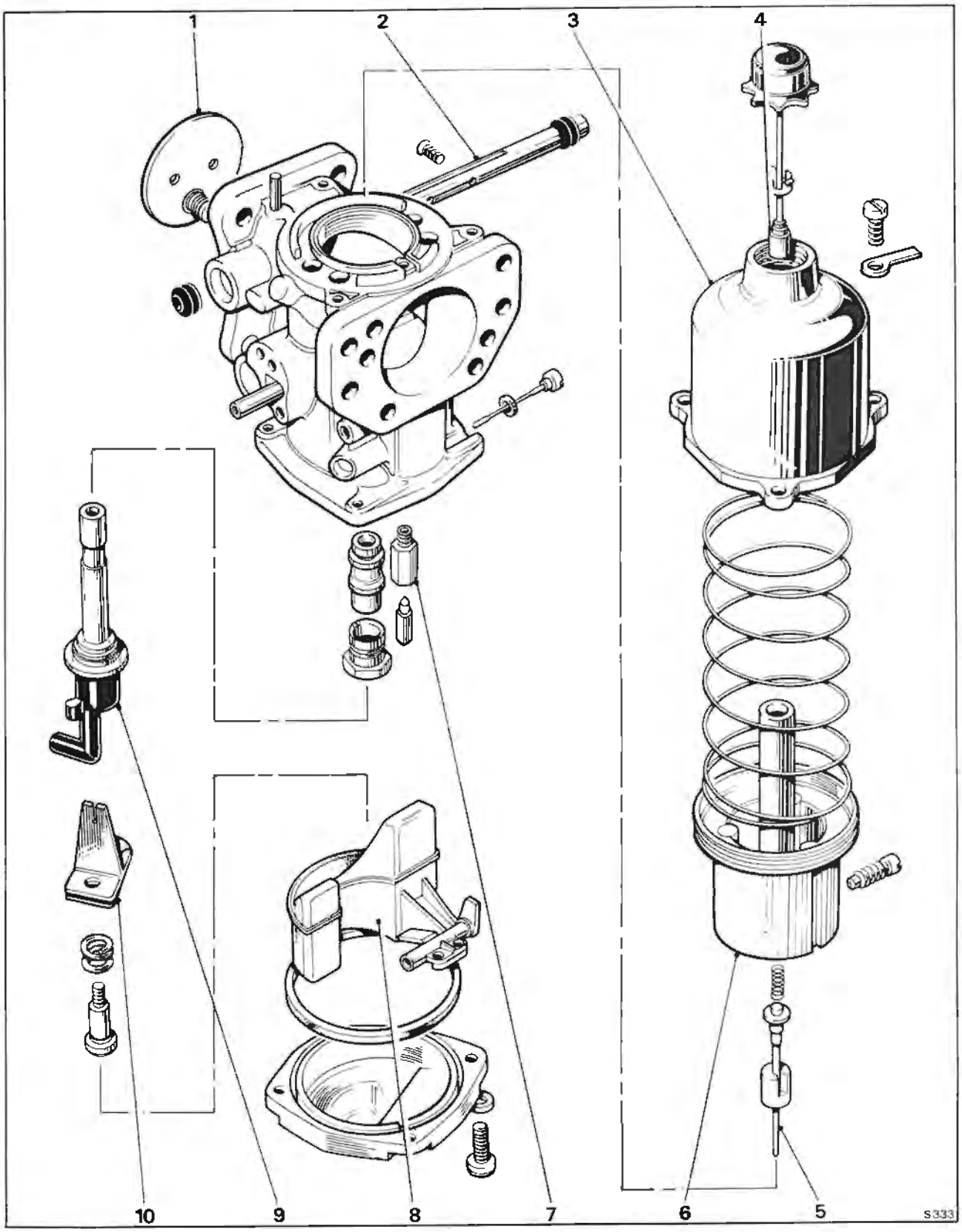

Fig. U28 SU HIF7 carburetter

1 Throttle disc with overrun valve
2 Throttle spindle
3 Suction chamber
4 Piston damper
5 Jet needle
6 Piston
7 Float needle valve assembly
8 Float
9 Jet assembly
10 Bi-metal jet lever

Printed in England
© Rolls-Royce Motors Limited 1978
January 1978
T.S.D. 4200
(Australia)

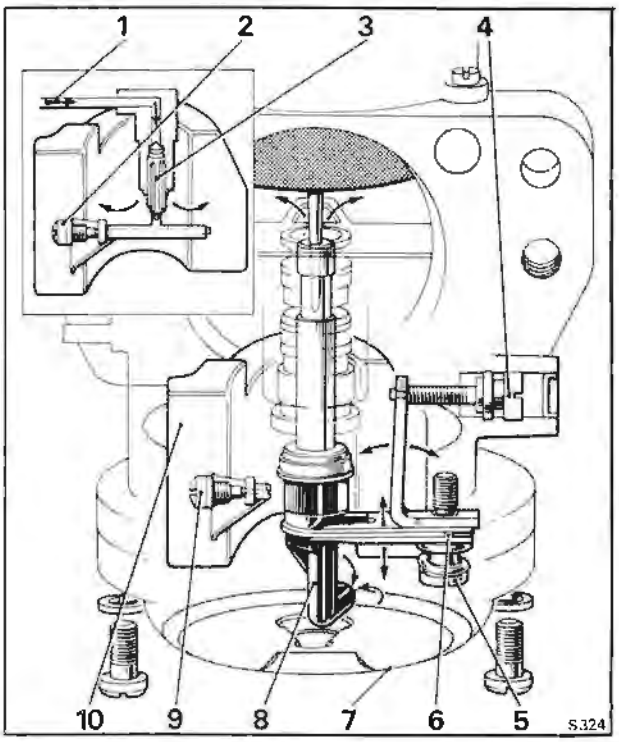

Fig. U29 Float chamber layout

1	Fuel inlet
2	Float fulcrum screw
3	Needle valve
4	Jet adjusting screw
5	Bi-metal pivot screw
6	Bi-metal assembly
7	Bottom cover-plate
8	Jet head
9	Float fulcrum screw
10	Concentric float

loading. As air is drawn through the carburetter, the piston acting as an obstruction will cause a depression to be formed in the area between the throttle and the piston. This depression is communicated by means of transfer holes in the base of the piston to the area above the piston, causing an upward force to be imposed on the piston. The piston will rise in response to this force relieving the depression in the area between the piston and the throttle as it does so until a point is reached where the force acting on the piston is balanced by the weight of the piston and the load exerted by the piston spring.

A spring-loaded jet needle is fitted to the carburetters, which is biased downstream and operates in a 2,54 mm. (0.10 in.) diameter main jet; this jet does not require centralising.

Float chamber (see Fig. U29)
The float chamber is incorporated in the main body casting; access to the chamber is obtained by removing the bottom cover-plate (item 7). The moulded float (item 10) is shaped so that it surrounds the jet tube and is pivoted along a line parallel to the inlet flange. The float is retained by a spindle (items 2 and 9) which screws into the body casting.

Entry of the fuel into the float chamber is via a brass tube (item 1) in the side of the carburetter body to a needle valve assembly (item 3).

The jet is pressed into the top of an aluminium tube which is in turn pressed into a plastic moulding (item 8). This hollow moulding known as the jet head is open at its lower end allowing fuel to enter the jet tube.

Mixture adjustment (see Fig. U29)
The jet tube of the HIF type carburetter is moved in the vertical plane to provide mixture adjustment.

The jet adjustment assembly is comprised of a right-angled adjusting lever of unequal length arms riveted to a bi-metal blade (item 6).

The blade is cut out to accept the jet head (item 8) and the shape of the jet head is formed so that any movement of the bi-metal blade is transmitted to the jet head, moving it in the vertical plane.

The right-angled adjusting lever and bi-metal blade (item 6) are attached to the body casting by a spring-loaded retaining screw (item 5) positioned in the short arm of the lever. This attachment allows the adjusting lever to be pivoted at the outer edge of its short arm and is loaded by the spring towards the jet adjusting screw (item 4).

The jet adjusting screw is located at the outer end of the long arm of the adjusting lever; screwing the adjusting screw inward will lower the jet, enriching the mixture and unscrewing the adjusting screw will allow the spring to return the lever together with the jet, weakening the mixture.

After the mixture has been set the jet adjustment can be sealed by fitting a plug into the jet adjusting screw recess of the carburetter body.

HIF7 carburetters are set and balanced by accurate flow measuring techniques during manufacture and therefore, adjustment of the mixture screws should not be necessary.

Fuel temperature compensation (Viscosity compensator) (see Fig. U29)
This device alters the jet position in relation to the metering needle to compensate for changes in fuel viscosity which take place with changes in fuel temperature.

When the fuel temperature rises, the viscosity is lowered, and in an uncompensated assembly this would allow more fuel to flow for a given jet/needle relationship.

In the HIF jet assembly the jet head is attached to a bi-metal blade (item 6). This bi-metal is immersed in the fuel in the float chamber and will move in the vertical plane in response to changes in fuel temperature. The jet will be raised to a weaker position on the jet needle when the fuel

temperature rises and will be lowered to a richer position when the temperature falls.

From this it will be seen that once the jet position has been selected by adjusting the mixture screw, alterations of fuel temperature will bring about slight alterations in jet position to compensate for the change in fuel viscosity.

The effect of this device is that drivability is improved over wide ranges of temperature, and that exhaust emissions can be kept within closer limits during cold starting and the warm-up period. Temperature compensation also allows carburetters to have the mixture setting pre-set and sealed before the car is delivered.

Overrun valves (see Fig. U30)

During overrun (i.e. when decelerating with the throttles closed), insufficient mixture is supplied to the engine to maintain satisfactory combustion. The overrun valves alleviate this condition by allowing some mixture to pass through the throttle plates (butterflies) at high inlet manifold depressions.

An overrun valve is fitted into the throttle plate of each carburetter.

An overrun valve consists of a small disc retained in each throttle plate by a spring loaded plunger. Under normal conditions the disc is seated against the throttle plate. When the throttle is suddenly closed, the increased inlet manifold depression lifts the disc from its seating and allows a metered quantity of air/fuel mixture to pass through the throttle plate.

The action of the overrun valves maintains satisfactory combustion on overrun, thus reducing hydrocarbon emissions.

After the sudden closure of the throttles and as soon as the manifold depression falls, the overrun valve disc returns to its seat on the throttle plate.

Spring-loaded jet needle (see Fig. U31)

The jet needle fitted to each carburetter is biased towards a predetermined position in the jet orifice by means of a spring-loaded fixing.

The shoulder of the needle abuts a protrusion formed on the needle guide. Under the pressure of a spring the needle is held permanently in one position relative to the air flow. As the needle is retained in a predetermined position no jet centring is required and a non-centreable jet bearing is fitted. To ensure correct fitting the needle guide carries an etched alignment mark which should be positioned mid-way between the two cut-outs in the piston.

Carburetter fuel filter

A filter element is fitted into the fuel filter housing attached to the side of each carburetter. At the intervals specified in the Service Schedules these two filter elements should be discarded and new ones fitted as described in Chapter K.

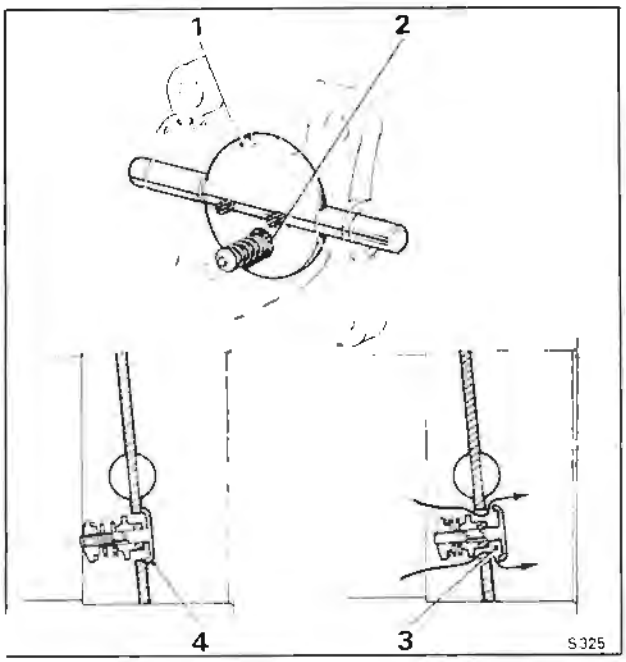

Fig. U30 Overrun valve
1 Throttle butterfly disc
2 Overrun valve
3 Overrun valve open
4 Overrun valve closed

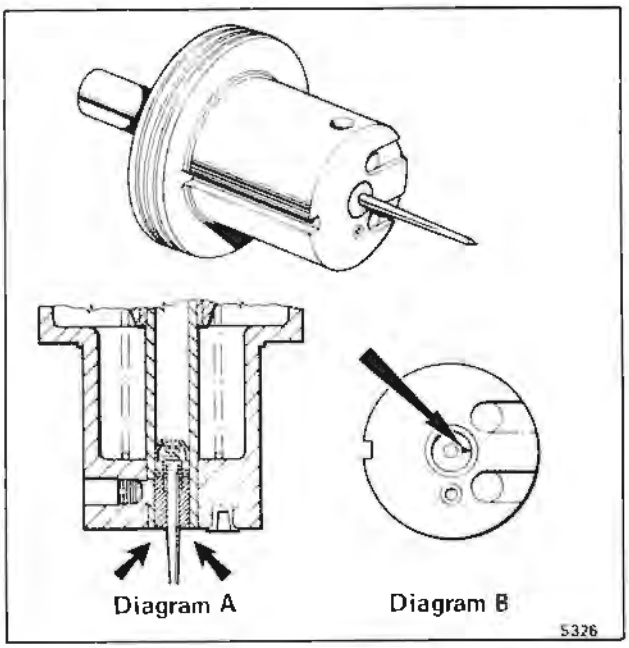

Fig. U31 Spring-loaded jet needle
Diagram A
Needle guide height setting
Diagram B
Needle guide alignment setting

Printed in England
© Rolls-Royce Motors Limited 1978
January 1978
P.S.D. 4200 Australia

Carburetters and air horns assembly - To remove
Before commencing to remove the carburetters observe the following points.
1. When disconnecting the various hoses, pipes and wiring connections ensure that they are suitably labelled to assist identification when assembling.
2. Ensure that all open ends of pipes, hoses, etc. are suitably blanked off to prevent the ingress of dirt, etc.
3. Ensure that the usual safety precautions are carried out (i.e. parking brake firmly applied, gear range selector lever in Park, battery disconnected, etc.).

To remove the carburetter and air horn assembly proceed as follows
From 'A' bank side
1. Remove the air intake elbow casting (refer to Air intake - To remove in Chapter K).
2. Disconnect the fuel feed pipe fitted adjacent to 'A' bank carburetter.
3. Withdraw the 'Lucar' electrical connections from the E.G.R. full throttle cut-out micro-switch.
4. Withdraw the 'Lucar' electrical connections from the speed control unit. Disconnect the chain link from the throttle linkage to the speed control unit. Withdraw the vacuum hose from the speed control unit. Unscrew and remove the 'steady' bolt from the speed control bracket.
5. Remove the split pin, washer and clevis pin from the throttle linkage just forward of 'A' bank carburetter.

From 'B' bank side
6. Disconnect the E.G.R. feed pipe upper joint (refer to E.G.R. feed pipe - To remove, Section U2).
7. Unscrew the union on the choke stove pipe at the bi-metal housing.
8. Unscrew the fuel feed pipe union at 'B' bank carburetter filter housing.
9. Remove the crankcase emission control system pipe from the choke butterfly housing; withdraw the housing from the end of the pipe.
10. Disconnect the electrical cables to the choke solenoid at the 'snap connector' joints, adjacent to the butterfly housing.
11. Disconnect the 'Lucar' electrical connections to the anti run-on solenoid, E.G.R. cut-off solenoid and the weakening device cut-off solenoid.
12. Detach the following hoses from the weakening device.
a. the hose from the float chamber vent valve
b. the hose from the fuel receiver
c. the hose to the air filter
d. the hose from the venturi chamber
These hoses are labelled A, H, G and D in Figure U4.
13. Disconnect the purge line at the restrictor.
14. Unscrew the 7/16 in. A/F nut from the dipstick bracket; collect the washer.
15. Unscrew the ½ in. A/F setscrew from the centre of the carburetter 'tee' piece; withdraw the setscrew and washer.
16. Carefully withdraw the carburetters and air horn assembly, ensuring that no pipes, hoses or electrical items are still connected.

Carburetters and air horns assembly - To fit
Fit the carburetters by reversing the procedure given for their removal, noting the following points.
1. Ensure that all joint faces are clean.
2. Fit new gaskets.

Carburetters - To remove
Remove the carburetters and air horn assembly from the car (refer to Carburetters and air assembly - To remove) and then, remove the carburetters from the air horns assembly as follows.

'A' bank carburetter
1. Unscrew the two ½ in. A/F nuts securing the air horn to 'A' bank carburetter.
2. Withdraw the bolts, collect the washers and the E.G.R. full throttle cut-out micro-switch mounting bracket.
3. Move the air horn flange upwards away from the carburetter.
4. Unscrew the union from the fuel filter.
5. Detach the vacuum supply hose from on top of the carburetter body adjacent to the carburetter and 'tee' piece flange.
6. Detach the hose from the side of the carburetter that connects to the fuel receiver in the weakening device.
7. Completely remove the two pinch bolts securing the throttle levers to the 'A' and 'B' bank carburetter butterfly spindles, remove the levers.
8. Unscrew the nut and withdraw the pinch bolt securing the 'fast-idle' lever to the carburetter spindle; withdraw the lever.
9. Unscrew the four half-nuts that retain the carburetter to the 'tee' piece flange; collect the washers.
10. Withdraw the carburetter and collect the gasket.

'B' bank carburetter
1. With a screwdriver, unscrew and remove the two screws securing the solenoid platform in position adjacent to 'B' bank carburetter. One screw is located on the air horn and has a nut underneath, and the other screw is situated in the filter housing.
2. Unscrew the ½ in. A/F nuts from the bolts that retain the air horn to the carburetter flange; withdraw the bolts and collect the washers. Move the solenoid platform away from the carburetter.
3. Detach the hose from the side of the carburetter to the fuel receiver in the weakening device.
4. Carefully ease the air horn upwards away from the carburetter.

5. Completely remove the two pinch bolts securing the throttle levers to the 'A' and 'B' bank carburetter butterfly spindles remove the levers.
6. Detach the vacuum supply hose from on top of the carburetter body adjacent to the carburetter and 'tee' piece flange.
7. Unscrew the remaining union from the fuel filter housing.
8. Unscrew the four half-nuts that retain the carburetter to the 'tee' piece flange; collect the washers.
9. Withdraw the carburetter and collect the gasket.

Dismantling of the components within the carburetters is not recommended as all carburetters are set and balanced by accurate flow measuring techniques during manufacture.

In certain isolated instances however, it maybe necessary to dismantle the carburetters and under these conditions the following procedure should be carefully followed.

Carburetter - To dismantle
Upper half (see Fig. U32)
1. Thoroughly clean the outside of the carburetter.
2. Unscrew the suction chamber retaining screws and remove the identity tag.
3. Lift the chamber assembly vertically from the body without tilting it.
4. Hold the piston firmly and pull the suction chamber, taking care not to bend the damper rod, until the damper retainer is freed from the piston rod. Unscrew and remove the damper.
5. Remove the piston spring, lift out the piston assembly and empty the oil from the piston rod.
6. Note the position of the needle guide etch mark in relation to the piston transfer holes for correct reassembly and unscrew the needle guide locking screw.
7. Withdraw the needle, guide and spring.

Lower half (see Fig. U33)
8. Mark the bottom cover-plate and body to ensure correct reassembly, unscrew the retaining screws and remove the cover complete with the sealing ring.
9. Remove the jet adjusting screw complete with 'O' ring.
10. Remove the jet adjusting lever retaining screw and spring.
11. Withdraw the jet complete with adjusting lever and disengage the lever.
12. Remove the float pivot spindle and aluminium washer.
13. Withdraw the float.
14. Remove the needle valve and unscrew the valve seat.
15. Unscrew the jet bearing locking nut and withdraw the bearing complete with fibre washer.

Throttle disc assembly (see Fig. U34)
16. Remove the throttle disc retaining screws.
17. Close the throttle and mark the position of the throttle disc in relation to the carburetter flange. **Do not mark the disc in the vicinity of the overrun valve.** Open the throttle and carefully withdraw the disc from the throttle spindle taking care not to damage the overrun valve.
18. Withdraw the throttle spindle and remove the seals, noting the way it is fitted in relation to the carburetter body to ensure correct reassembly.

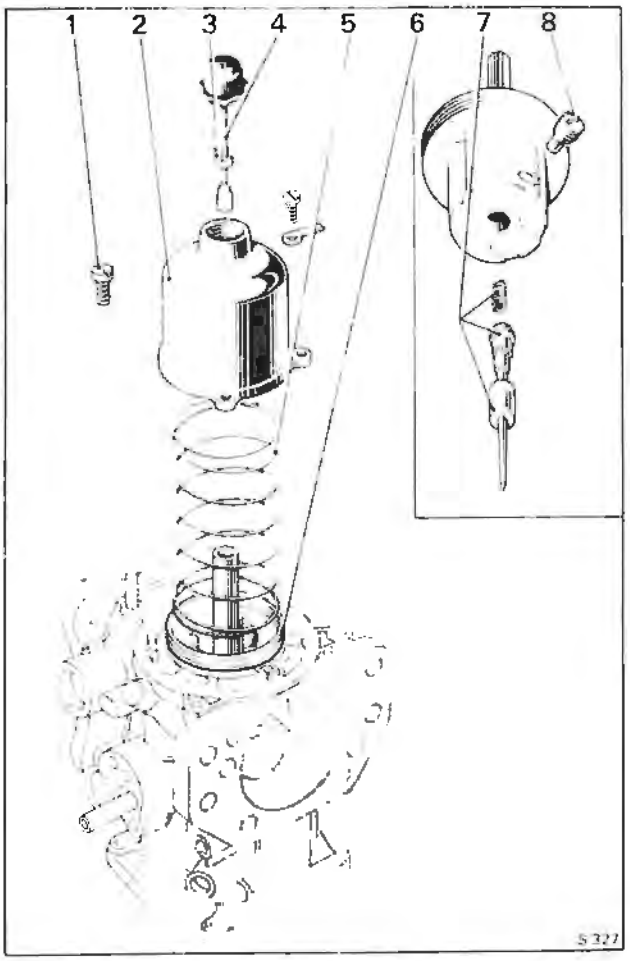

Fig. U32 Dismantling a carburetter (Upper half)
1 Suction chamber retaining screw
2 Suction chamber
3 Damper retainer (Piston ball race clip)
4 Damper rod
5 Spring
6 Piston
7 Spring-loaded needle assembly
8 Needle guide locking screw

Printed in England
© Rolls-Royce Motors Limited 1978
January 1978
S.D. 4200
Australia)

Carburetter - To inspect

1. Examine the throttle spindle and its bearings in the carburetter body; check for excessive play, and fit new parts if necessary.
2. Examine the float needle and seating for damage and excessive wear; fit new parts if necessary.
3. Examine all rubber seals and 'O' rings for damage or deterioration; fit new parts if necessary. **The cover-plate sealing ring must be renewed.**

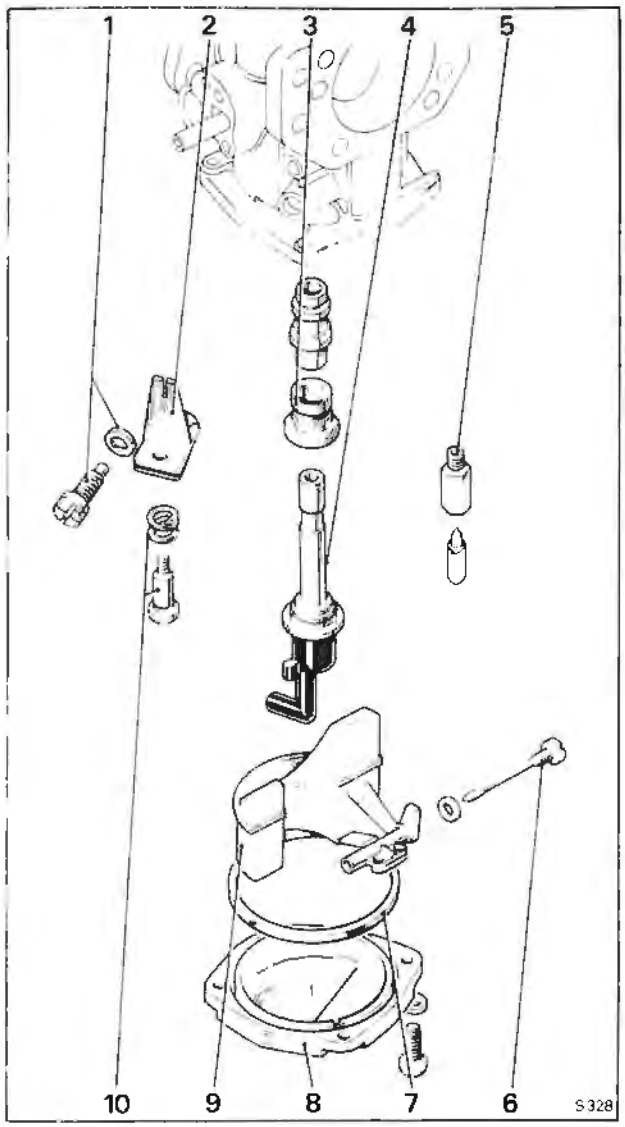

Fig. U33 Dismantling a carburetter (Lower half)

1 Jet adjusting screw and 'O' ring
2 Jet adjusting lever
3 Jet bearing assembly
4 Jet
5 Float chamber needle valve
6 Float pivot spindle
7 Sealing ring
8 Bottom cover plate
9 Float
10 Jet lever adjusting screw

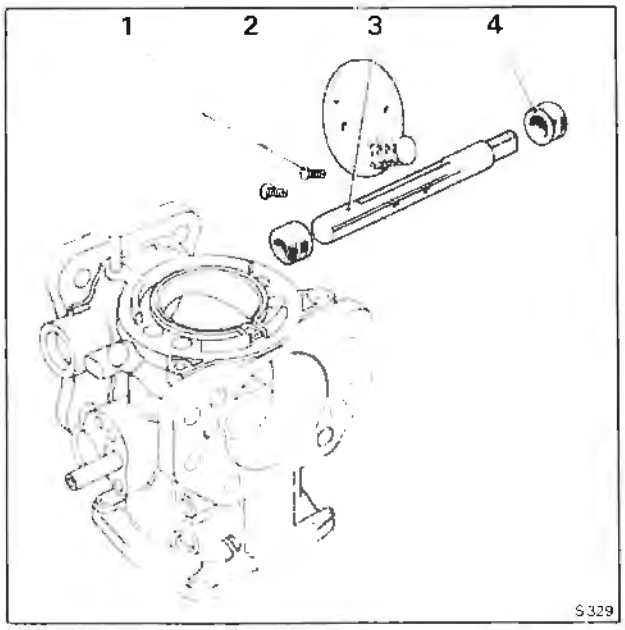

Fig. U34 Dismantling a carburetter (Throttle disc assembly)

1 Throttle disc retaining screws
2 Throttle disc assembly
3 Throttle spindle
4 Seal

4. Examine the carburetter body for cracks and damage and for security of the brass connections and the piston key.
5. Clean the inside of the suction chamber and piston rod guide with fuel or methylated spirit (denatured alcohol) and wipe dry. **Abrasives must not be used.**
6. Examine the suction chamber and piston for damage and signs of scoring.
7. Check that all the balls are in the piston ball race (2 rows, 6 per row). Fit the piston into the suction chamber, without the damper and spring, hold the assembly in a horizontal position and spin the piston. The piston should spin freely in the suction chamber without any tendency to stick.

Carburetter - To assemble

Assemble the carburetter by reversing the procedure given for removal, noting the following points.

1. Ensure that the throttle disc is fitted in its original position.
2. New throttle disc retaining screws must be used when refitting the disc. Ensure that the throttle disc is correctly positioned and closes correctly before tightening the retaining screws. Spread the split ends of the screws sufficiently to prevent turning.
3. Position the throttle spindle end seals just below the spindle housing flange.
4. When fitting the jet assembly to the adjusting lever ensure that the jet head moves freely in the bi-metal cut-out.

5. Fit a new float pivot spindle sealing washer or anneal the existing washer.

Check the level of the float in the float chamber (refer to Carburetter float level - To set).

6. Check that the small diameter of the jet adjusting screw engages the slot in the adjusting lever and set the jet 3,05 mm. (0.12 in.) below the bridge of the body.

7. Ensure that the needle guide etch mark aligns correctly with the piston transfer holes. After fitting the needle assembly, check that the shoulder of the guide aligns with the face of the piston (see Fig. U31).

8. To prevent the piston spring from being 'wound up' during reassembly, temporarily fit the piston and suction chamber, less the piston spring, to the body and pencil mark their relative positions to each other. Fit the spring to the piston, hold the suction chamber above the piston, align the pencil marks and lower the chamber over the spring and piston.

Before assembly ensure that the damper retainer (piston ball race clip) is refitted by pressing it fully into the piston rod (see Fig. U35).

The damper retainer (piston ball race clip) can also be installed with the suction chamber fitted to the engine by using fitting tool RH 9086.

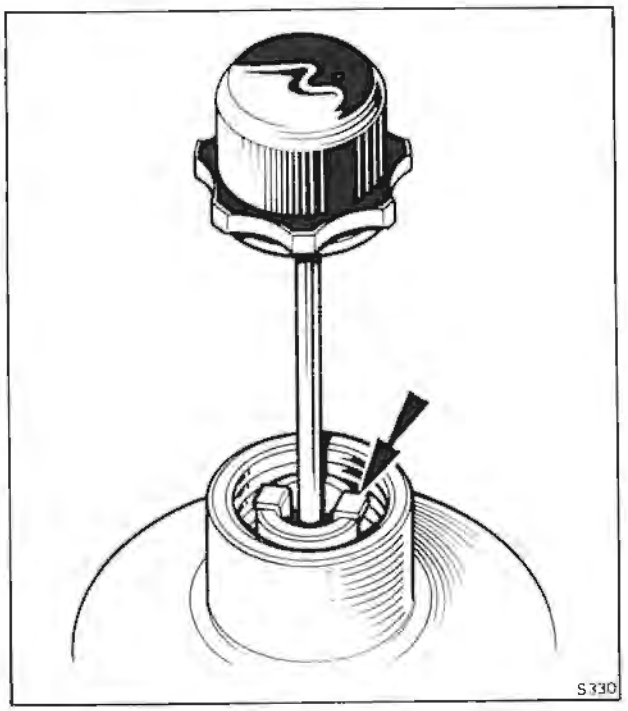

Fig. U35 Position of damper retainer

Carburetter float level - To set

1. Remove the carburetter from the engine.
2. Invert the carburetter.
3. Mark the bottom cover-plate and carburetter to ensure correct assembly, unscrew the retaining screws and remove the cover complete with the sealing ring.

A new rubber sealing ring must be installed when fitting the cover-plate.

4. Ensure that the float chamber needle valve is held in the closed position by the weight of the float only.
5. Check that the lowest point on the float (see Fig. U36) is either level with the float chamber face, or up to 1,52 mm. (0.060 in.) below.
6. If necessary, adjust the float position by carefully bending the brass pad.
7. Check that the float pivots correctly about the spindle.

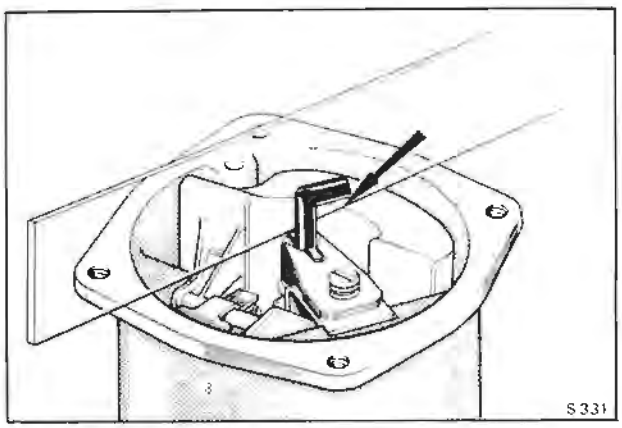

Fig. U36 Checking the float level

Carburetter air valve damper - To top-up

The upper portion of the guide spindle, attached to the air valve piston in each carburetter, is hollow and is filled with the same type of oil as used in the engine.

1. Unscrew the damper cap and carefully raise the damper until the damper, **together with the air valve piston,** reach the top of their travel. Ensure that the retainer is not displaced from its position in the piston rod (see Fig. U35).
2. Holding the damper and piston in the raised position, fill the recess in the damper retainer (piston ball race clip) with clean engine oil.
3. Lower the damper until the cap contacts the neck of the suction chamber, then carefully raise the damper and piston again and check the oil level; this is correct if the oil level is just visible in the bottom of the recess in the damper retainer (piston ball race clip). If the oil level is not visible, repeat the topping-up procedure until the oil level is correct.
4. Check that the damper retainer (piston ball race clip) is still in its correct position in the piston rod as shown in Figure U35, then lower the damper and screw the damper cap firmly into position.

Printed in England
© Rolls-Royce Motors Limited 1978
October 1978
T.S.D. 4200 (Australia)

If the damper retainer (piston ball race clip) becomes inadvertently displaced during the topping-up procedure or if the damper should be removed from the piston, do not fit the damper cap or run the engine until the retainer has been returned to its correct position in the piston rod. The special tool RH 9086 should be used to fit damper retainer (piston ball race clip).

Carburetter throttle linkage - To fit and set (see Fig. U37)

1. Assemble 'A' bank and 'B' bank throttle levers (items 6 and 11) onto the carburetter spindles.
2. Fit the setting jig (RH 8880) into position on the throttle levers.
3. Fully close 'B' bank carburetter butterfly (item 7).
4. Tighten the pinch bolt securing 'B' bank throttle lever.
5. Fully close 'A' bank carburetter butterfly (item 2).
6. Tighten the pinch bolt securing 'A' bank throttle lever.
7. Fit the throttle spring (item 3) to the throttle levers.
8. Remove the setting jig from the throttle levers.
9. Fit the cross link guide bracket (item 9) to the carburetter 'tee' piece (item 5). Secure in position with two small screws which should be 'locked' using two tabs washers.
10. Fit the cross link (item 10) and the eccentric throttle adjuster (item 4) onto the throttle levers, ensuring that both throttle butterflies are closed when adjusting and tightening the eccentric adjuster.

Note
The eccentric pin should be set in the lowest position possible.

11. Ensure that the cross link guide (item 9) has a clearance of between 1,27 mm. (0.050 in.) and 1,78 mm. (0.070 in.) with the cross link. If necessary bend the guide to give these clearances.
12. Check that the throttle linkage moves freely.
13. Fit the idle stop screw (item 8) and lock plate; adjust until the screw just contacts the stop bracket (item 9) with the throttle butterflies remaining in the closed throttle position.
14. Screw down the idle stop screw ½ turn.
15. Connect one end of the drive link (item 12) to the 'B' bank throttle lever and the other end, to the manifold shaft lever (item 13).
16. Operate the linkage to ensure free movement.
17. With the throttles in the closed position check that the 'A' bank control shaft to control rod lever (item 14) on the rear of the manifold shaft is in line with the front manifold shaft lever (item 13). Tighten the securing bolts on both levers.
18. Operate the mechanism; check for freedom of movement within the linkage and also clearance with the various engine components.
19. To set the remainder of the linkage from the control rod lever on the rear of the manifold shaft to the accelerator pedal refer to Chapter T - Transmission.

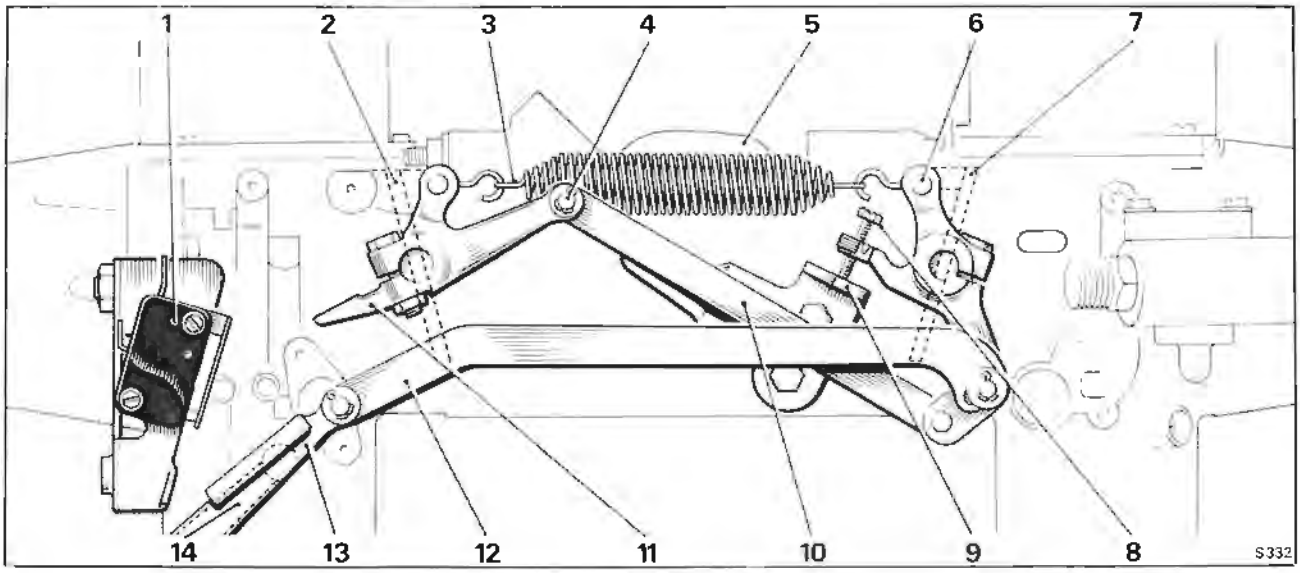

Fig. U37 Carburetter throttle linkage

1 E.G.R. full throttle cut-out micro-switch
2 'A' bank carburetter throttle butterfly
3 Throttle spring
4 Eccentric throttle adjuster
5 Carburetter 'tee' piece
6 'B' bank carburetter throttle lever
7 'B' bank carburetter throttle butterfly
8 Idle stop screw
9 Throttle cross link guide bracket
10 Cross link
11 'A' bank carburetter throttle lever
12 Drive link
13 Front manifold shaft lever
14 Rear manifold shaft lever

Printed in England
© Rolls-Royce Motors Limited 1978
January 1978
T.S.D. 4200 (Australia)

Carburetters - To set

The carburetters fitted to these cars are adjusted at the factory using **special equipment** to ensure that their settings comply with the current emission control regulations.

Under normal circumstances the carburetters should not require adjustment in service.

If however, adjustment is found necessary due to inadvertent disturbance or replacement of a component set the carburetters by carrying out the following operations in the sequence given.

a. Set throttle linkage and temporarily set engine idle speed. Check linkage clearances.
b. Set cold start fast-idle cam.
c. Tune carburetters.
d. Set cold start fast-idle speed.
e. Set the kick-down micro-switch.
f. Set full throttle stop and full throttle E.G.R. cut-off micro-switch.

Carburetter tuning

Preliminary checks

Before tuning the carburetters the following checks should be carried out.

Ensure that the vehicle is in 'Park', the parking brake firmly applied and that the gear range actuator thermal cut-off has been removed from the main fusebox.

1. Check the condition of the spark plugs.
2. Check the ignition timing.
3. Check the flow through the choke stove pipe.
4. Check the entire induction system for air leaks.
5. Check the purge line flow rate.
6. Ensure that the air conditioning system is switched off.
7. Start the engine and warm up, allow to run for at least 5 minutes after the thermostat has opened.
8. Stop the engine, ensure that the choke butterfly valve is fully open and the choke fast-idle off.
9. Connect an electric impulse tachometer in accordance with manufacturer's instructions.
10. Check the float chamber depression.
11. Check the exhaust gas recirculation system for correct operation.
12. Check and set the full throttle exhaust gas recirculation cut-out micro-switch.

Carburetter idle air balance

1. Ensure that the usual safety precautions are carried out (i.e. parking brake firmly applied, gear range selector lever in Park, etc.) and connect an impulse tachometer in accordance with the manufacturer's instructions.
2. Disconnect the speed control chain.
3. Start and run the engine until normal operating temperature is attained.
4. Stop the engine.
5. Fit the dial gauges RH 9105 with RH 8841 (kit to convert dial gauges to fit the HIF7 carburetters) to the carburetter dashpots in place of the dampers.
6. Zero the gauges with the engine stopped and lightly tighten the gauge clamp screws.
7. Start and run the engine at the idle speed setting (650 r.p.m.); adjust the carburetter piston lifts to be equal (within 10%) using the eccentric adjuster (see Fig. U37).
8. The average piston lift reading should now be between 2,03 mm. and 2,54 mm. (0.080 in. and 0.100 in.).

If the idle speed piston lift is over 2,54 mm. (0.100 in.) check the ignition timing at idle as this condition may result in unsatisfactory driveability.

9. Stop the engine and remove the impulse tachometer.
10. Remove the dial gauges and fit the carburetter dampers. **Ensure that the dashpot ball race clips (piston damper retainers) are fitted correctly and are pressed fully into the piston rod (see Fig. U35) using tool RH 9086.**
11. Connect the speed control chain and adjust to give a minimum slack condition, consistant with no impediment to the throttle lever to return to the idle speed position.

Carburetter mixture strength - To set

1. Ensure that the usual safety precautions are carried out (i.e. parking brake firmly applied, gear range selector lever in Park, etc.) and connect an impulse tachometer in accordance with the manufacturer's instructions.
2. Remove the air intake, blank off the hot idle compensator feed drilling (see Fig. U38) and replace the intake.

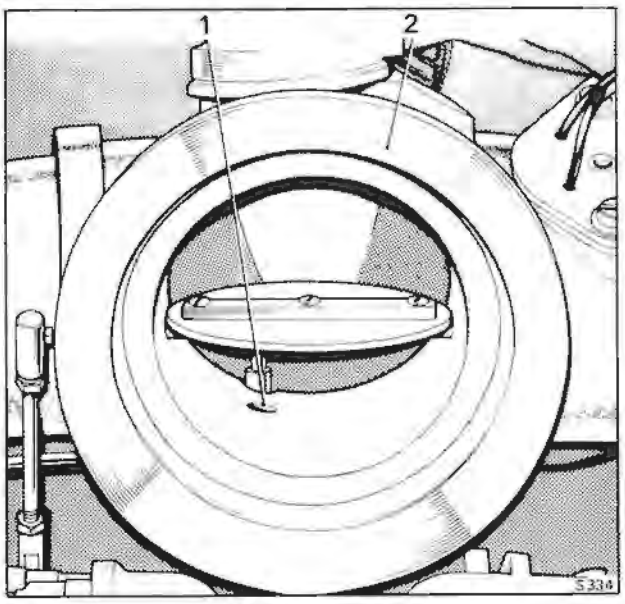

Fig. U38 Hot idle mixture compensator feed
1 Hot idle compensator feed
2 Air intake butterfly housing

3. Remove the air inlet hose from the air injection system pressure relief valve and fit a blank over the valve (a suitable blank may be produced from a short length of rubber hose with one end plugged).
Note
The air injection system is inoperative when the relief valve inlet air hose is disconnected from the air pump. The valve must be blanked to prevent air being drawn into the exhaust port by pulsations in the exhaust system since this would affect the idle CO reading.

4. Disconnect the E.G.R. cut-off solenoid to carburetter signal hose at the solenoid, blank off the hose.
5. Unscrew and remove the pressure tapping cap from the weakening device.
6. Ensure that the engine has run for at least 25 minutes after the thermostat has opened.
7. Purge the engine at 2 000 r.p.m. in Neutral for ¼ minute. Allow the engine speed to return to the idle setting and ensure that this is 650 r.p.m.; adjust if necessary using the idle stop screw.
8. Insert the probe of a CO meter into either exhaust system tailpipe and check the reading.

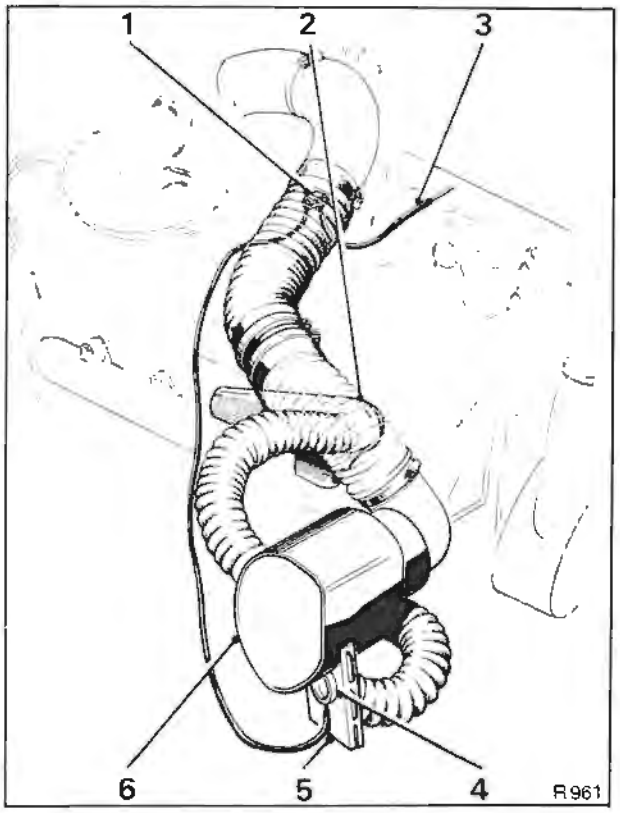

Fig. U39 Temperature controlled air intake
1 Temperature sensor
2 Hot air scoop
3 Manifold vacuum hose
4 Air blend valve
5 Cold air intake
6 Air cleaner/silencer

9. The CO meter reading should be 1% to 4%. If the reading is outside the limits quoted
a. Check for induction system leaks (if below 1%)
b. Check the choke stove and purge line flow rates.
10. If after carrying out Operation 8 the idle speed CO meter reading is still outside the limits quoted, the carburetter mixture screws (see Fig. U29) may be adjusted by equal amounts up to ½ turn in the same direction in order to achieve the mean limit of 2.5%. No attempt should be made to adjust the CO reading if it is in the region of 2.5% to 4.0%.

Note
a. Clockwise rotation of the mixture screws will richen the mixture.
b. The tuning operations should be carried out in the shortest possible time. If the time exceeds 3 minutes, run the engine at 2 000 r.p.m. in Neutral for ¼ minute and then resume the tuning operations. Repeat this purging operation if a further period of 3 minutes is exceeded.

After purging the system gently tap all around the neck of the carburetter suction chamber with a lightweight non-metallic object (i.e. the wooden handle of a small screwdriver), to eliminate carburetter piston hysteresis.

11. Stop the engine.
12. Fit the pressure tapping cap to the weakening device, fit a new sealing washer if necessary.
13. Remove the blank from the air pressure relief valve and connect the feed hose from the air pump to the relief valve.
14. Remove the blank from the E.G.R. cut-off solenoid to carburetter signal hose and connect the hose to the E.G.R. cut-off solenoid.
15. Start the engine and check the idle speed, this should be 650 r.p.m.; adjust by means of the idle stop screw (refer to Section U6).
16. Stop the engine, remove the air intake and discard the blank from the hot idle compensator feed drilling; fit the air intake.
17. Remove the impulse tachometer.

Carburetter tamperproofing
Both carburetter mixture screws **must** have tamper-proof caps fitted upon completion of the setting operation.

Special tools have been designed and produced for the fitting of the tamperproof caps as follows.
'A' bank carburetter mixture screw cap - RH 9096
'B' bank carburetter mixture screw cap - RH 9097

Temperature controlled air intake

To ensure rapid warm-up and improve control of the air/fuel ratio a temperature controlled air intake is fitted (see Fig. U39).

A vacuum operated blending valve attached to the air cleaner assembly is controlled by a thermal sensor in the air intake elbow. This valve blends hot

air from a pick-up point (scoop) adjacent to the exhaust manifold with cold air from under the front wing; thus maintaining a constant temperature of the intake air as it enters the carburetters.

All other details for the Temperature Controlled Air Intake System are given in Chapter K except for the checking procedure which is as follows.

Temperature controlled air intake - To check

1. Disconnect the air intake hose at the intake elbow and check that the correct temperature sensor is fitted, this should be colour coded white.
2. Disconnect both vacuum hoses at the temperature sensor.
3. Place the open ends of both hoses together and check that there is no obvious air leak. Detach the open ends of the hoses from each other (i.e. release the vacuum sharply) and listen for the vacuum motor within the wing to 'click' open.
4. Reconnect the hoses.

Note

If there is an air leak or the operation of the temperature controlled air intake is suspect, remove the right-hand front underwing sheet and check the hose connection to the vacuum motor; also observe the operation of the temperature flap.

Printed in England
© Rolls-Royce Motors Limited 1978

January 1978
T.S.D. 4200
(Australia)

Section U6

Ignition system

Data

Ignition timing	9° B.T.D.C. (Static) 15° B.T.D.C. at 1 200 r.p.m. 7° - 13° B.T.D.C. at idle speed (650 r.p.m.) (Approach 1 200 r.p.m. from a higher speed).

Ignition control system

The ignition system utilises an Opus distributor (in which an oscillator pick-up and control unit replace the conventional contact breaker), a high load ignition coil and a ballast resistor. The control unit comprises an electronic oscillator, amplifier and power transistor.

A drum with eight ferrite rods (one per cylinder) moulded into the outer edge is mounted onto the distributor drive-shaft. As the drum rotates a voltage is created each time a ferrite rod passes the oscillator pick-up, this signal is then amplified and used to switch-off the normally conducting power transistor in the primary coil circuit thus inducing a high voltage in the secondary winding which is distributed to the sparking plugs in the normal manner.

The distributor has a conventional centrifugal advance mechanism.

The Opus distributor provides increased accuracy of timing and increased service life before maintenance is required.

For the removal and fitting instructions of the ignition system components refer to Chapter M.

Ignition - To time (using a stroboscope)

The ignition is timed on A1 cylinder which is located at the front left-hand side of the engine (viewed from the front of the car).

Note

If the ignition timing is to be set, ensure that the sparking plugs are in good condition before running the engine; if they require cleaning or renewal the sparking plugs gap should be set to 0,9 mm. (0.035 in.).

1. To check the ignition timing commence by running the engine until normal operating temperature is attained and the choke 'fast-idle' is in the off position. Switch off the engine.
2. Connect a stroboscope and a tachometer to the engine as described in the instructions supplied with the respective equipment.
3. Start the engine and adjust the throttle stop screw to give an idle speed of 1 200 r.p.m. When setting the engine idle speed reduce from a higher speed to 1 200 r.p.m.
4. Direct the flashing light of the stroboscope onto the crankshaft damper timing marks and timing pointer; the pointer is positioned on the right-hand side of the crankshaft damper when viewed from the front of the engine.
5. If the timing pointer does not coincide with the 15° B.T.D.C. mark on the crankshaft damper adjust the ignition timing as follows.
6. Release the clamp screw on the distributor and rotate the head of the distributor in the appropriate direction until the correct timing is obtained. Clockwise rotation of the distributor head advances the ignition and conversely anti-clockwise rotation retards the ignition. After adjustment has been carried out tighten the clamp screw and again check to ensure that the timing has not altered whilst tightening the clamp screw.
7. Set the engine idle speed to 650 r.p.m.
8. Direct the flashing light of the stroboscope onto the crankshaft damper timing marks and timing pointer. Check that the ignition timing is approximately 7° - 13° B.T.D.C.
9. Stop the engine and remove all the test equipment.

Setting the engine idle speed

Ensure that the engine is at normal operating temperature and that the choke 'fast-idle' is in the off position.

The air conditioning system must be switched off and a tachometer connected to the engine in accordance with the manufacturer's instructions.

1. Stop the engine, remove the air intake and blank off the hot idle compensator feed drilling (see Fig. U38); replace the air intake.
2. Start the engine and, if necessary, adjust the engine idle speed to 650 r.p.m. using the throttle stop screw.
3. Stop the engine and remove the air intake. Remove the blank from the hot idle compensator feed drilling and fit the air intake. Detach the tachometer and stroboscopic timing equipment.

Distributor maintenance

The distributor requires no routine maintenance except that, at the mileage intervals specified in the Service Schedules, the moulded cover and H.T. rotor arm should be removed and the spindle shaft bearings lubricated by inserting a few drops of

Printed in England

© Rolls-Royce Motors Limited 1979

November 1979

T.S.D. 4206
(Australia 1978 Model year)

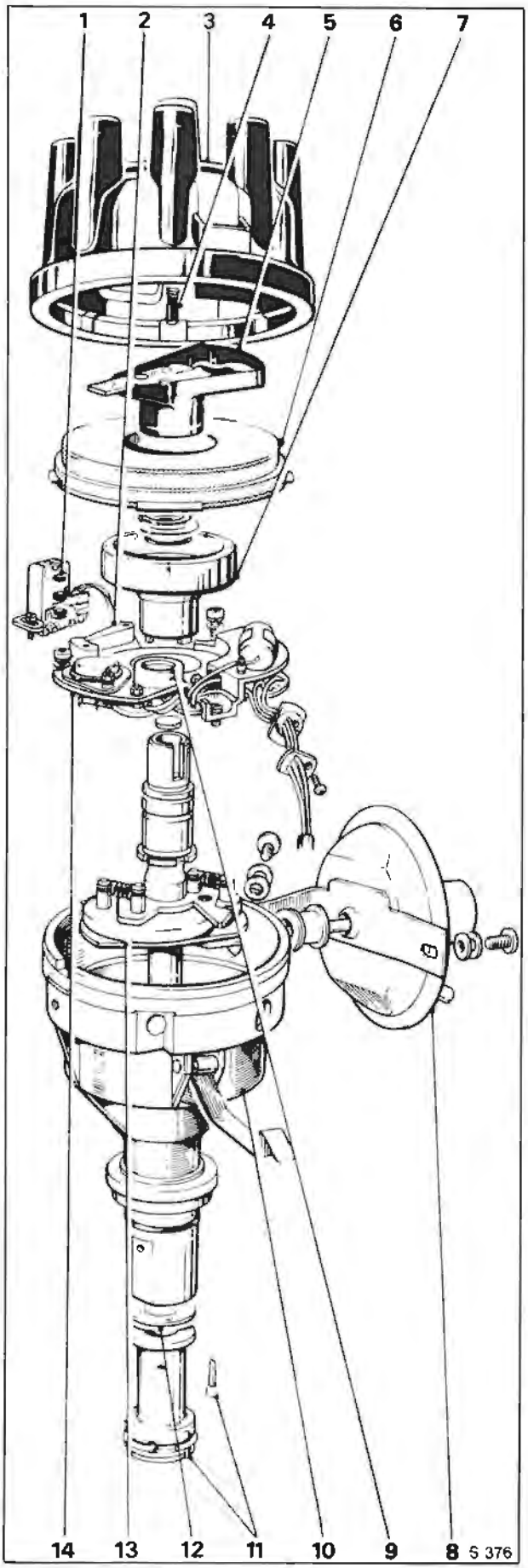

engine oil onto the felt pad. The automatic advance mechanism should also be lubricated at this time with a few drops of engine oil inserted through apertures in the base plate.

Sparking plugs

The sparking plugs approved for this car are Champion RN 14Y. Before fitting the plugs, set the gaps with the aid of a feeler gauge to 0,9 mm. (0.035 in.) and lightly smear the threads with 'Graphogen' grease.

Fig. U36 Ignition distributor

1 Pick-up module
2 Pick-up arm
3 Distributor cover (cap)
4 High tension brush and spring
5 Rotor arm
6 Flash over shield (dust cover)
7 Timing rotor
8 Vacuum advance unit (not connected)
9 Control unit
10 Distributor body
11 Driving dog and pin
12 Thrust washer
13 Automatic advance mechanism
14 Electronic module assembly

Section U7

Electrical components

The electrical components described in this section would normally appear in Chapter M - Electrical System, however, as they are only used in connection with the emission control system it is thought more practical to include the information in this Chapter.

The components concerned are as follows.

E.G.R. system lock-out switch
E.G.R. system cut-off solenoid
Anti 'run-on' solenoid
Weakening system cut-off solenoid
Weakening system lock-out switch
Full throttle E.G.R. cut-off micro-switch

E.G.R. system lock-out switch

The bi-metal lock-out switch is situated in the engine coolant thermostat outlet elbow (see Fig. U41).

E.G.R. system lock-out switch - To remove

1. Remove the radiator filler cap and drain the engine coolant.
2. Disconnect the electrical leads.
3. Unscrew and remove the three 2 B.A. setscrews, spring washers and plain washers.
4. Free the joint and withdraw the lock-out switch.

E.G.R. system lock-out switch - To fit

Fit the lock-out switch by reversing the procedure given for removal, noting the following points.

1. Each setscrew has one spring and one plain washer.
2. The joint faces must be clean and a new gasket fitted.

E.G.R. system lock-out switch - To check

1. Withdraw the protective sheath from the electrical connections.
2. Do not disturb any wiring but connect both electrical connections via a test lamp.
3. Ensure that the engine is cold [i.e. engine coolant temperature below approximately 14°C. (57°F.)].
4. Check that the test lamp bulb is illuminated.
5. Start and run the engine; as the coolant exceeds approximately 14°C. (57°F.) the test lamp bulb should extinguish.
6. Stop the engine and allow to cool, noting that as the coolant temperature drops to approximately 12°C. (54°F.) the test lamp bulb again illuminates.

E.G.R. system cut-off solenoid

This assembly is situated rearmost of the three solenoid assemblies mounted on a platform, adjacent to the 'B' bank carburetter (see Figs. U4 & U42).

E.G.R. system cut-off solenoid - To remove

1. Detach the electrical connections, noting the position of the connections to assist identification when assembling.
2. Detach the rubber hose from either side of the solenoid.
3. Unscrew the two 'cheese-headed' mounting screws and withdraw the solenoid.

E.G.R. system cut-off solenoid - To fit

Fit the cut-off solenoid by reversing the procedure given for removal.

E.G.R. system cut-off solenoid circuit wiring - To check

1. Disconnect the 9 White and 14 White/Green cables at the solenoid 'Lucar' connections.
2. Connect a test lamp across the two disconnected cables (in place of the solenoid).
3. Ensure that the engine is cold.

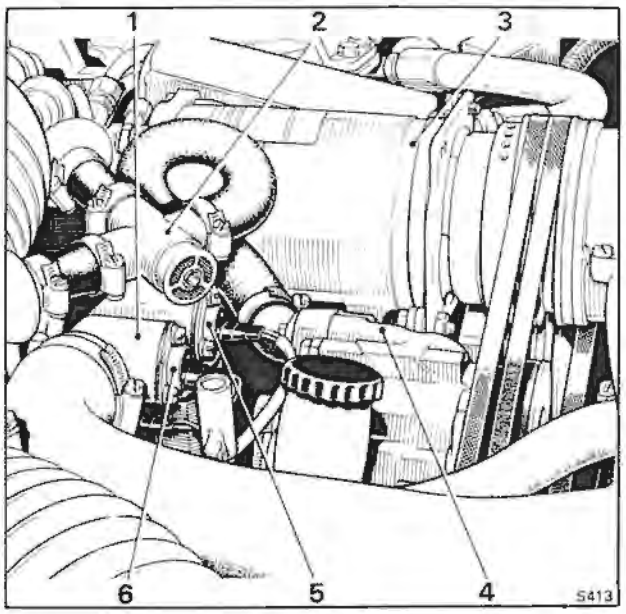

Fig. U41 E.G.R. system lock-out switch

1 Thermostat outlet elbow
2 Three-way connection block
3 Refrigeration compressor
4 Air pump
5 Cooling system booster fan switch
6 E.G.R. lock-out switch

Printed in England
© Rolls-Royce Motors Limited 1978

4. Switch on the ignition and note that the bulb of the test lamp is illuminated.
5. Start and run the engine, as the engine coolant temperature exceeds approximately 14°C. (57°F.) the test lamp bulb should extinguish.
6. Depress the full throttle cut-out micro-switch plunger and check to ensure that the test lamp bulb illuminates. Release the plunger and the test lamp bulb should extinguish.

E.G.R. system cut-off solenoid - To check
1. Detach the carburetter vacuum signal to E.G.R. cut-off solenoid hose at the solenoid and blank off the hose.

Connect a suitable length of hose to the solenoid connection.
2. Clean the open end of the additional hose.
3. Switch on the ignition.
4. Place the hose in the mouth and apply suction.
5. If the operation of the solenoid is correct note that the following conditions apply.

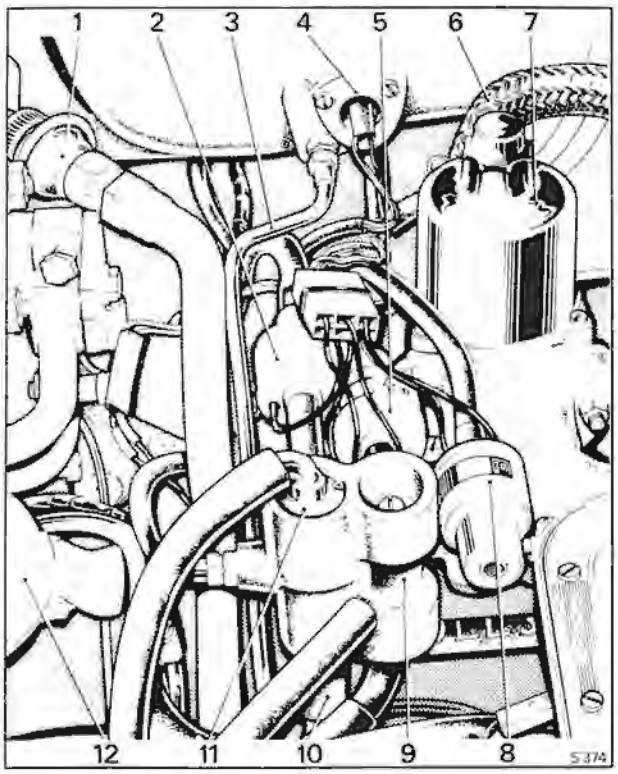

Fig. U42 Solenoid platform
1 Check valve
2 Anti 'run-on' solenoid
3 Choke stove pipe
4 Weakening device cut-out switch
5 Weakening device cut-off solenoid
6 Exhaust gas distribution pipe
7 'B' bank carburetter
8 E.G.R. cut-off solenoid
9 Mixture weakening device
10 Fuel receiver
11 Float chamber vent valve
12 Engine oil filler cap

a. With an engine coolant temperature of below approximately 14°C. (57°F.) blowing air through the hose **should not** be possible
b. With an engine coolant temperature of above approximately 14°C. (57°F.) blowing air through the hose **should** be possible.
c. As the engine coolant temperature falls to 12°C. (54°F.) the conditions described in (a) should again apply.
6. If the operation of the solenoid is suspect, fit a new unit.

Anti 'run-on' solenoid

The anti 'run-on' solenoid is situated on a platform adjacent to 'B' bank carburetter; it is the foremost of the three solenoids fitted on the platform.

The use of low octane fuel often causes an engine to 'diesel' (i.e. to continue to run-on after the ignition has been switched off, particularly when the engine is hot). To prevent this an anti 'run-on' solenoid is fitted between the fuel receiver and the induction manifold (see Figs. U4 and U42). When the ignition is switched off the solenoid valve opens and connects the weakening system to the induction manifold, thus creating a high depression in the float chambers which cuts off the fuel supply.

Anti 'run-on' solenoid - To remove
1. Disconnect the rubber hose from either side of the solenoid.
2. Disconnect the two electrical leads at their 'Lucar' connections.
3. Unscrew and remove the two screws situated one on either side of the solenoid body.
4. Withdraw the anti 'run-on' solenoid.

Anti 'run-on' solenoid - To fit
Fit the anti 'run-on' solenoid by reversing the procedure given for removal.

Anti 'run-on' solenoid circuit wiring - To check
1. Connect a test lamp across the two 'Lucar' connections to the solenoid. **Do not disconnect the two connections.**
2. Switch on the ignition and check that the test lamp bulb illuminates.
3. Switch off the ignition and check that the test lamp bulb is extinguished.

Anti 'run-on' solenoid - To check
1. Ensure that the usual safety precautions are carried out (i.e. parking brake firmly applied, gear range selector lever in Park, etc.).
2. Connect an impulse tachometer in accordance with the manufacturer's instructions.
3. Detach the weakening device pressure tapping cap (see Fig. U24) and connect a manometer capable of reading 0 to 15,5 cm. (0 to 6 in.) of water to the tapping.
4. Disconnect the carburetter vacuum signal to E.G.R. cut-off solenoid hose at the solenoid. Blank off the hose.

5. Start and run the engine at the idle speed setting (650 r.p.m.).
6. Switch off the engine and observe the reading on the manometer. The reading should momentarily increase to approximately 15,5 cm. (6.0 in.) as the engine stops.
7. If the reading does not increase, the operation of the anti 'run-on' solenoid is incorrect.

This could be caused by the following.

a. A blockage in the hose (see Fig. U24) from the anti 'run-on' solenoid to the weakening device.
b. A blockage in the hose (see Fig. U24) from the anti 'run-on' solenoid to the vacuum manifold or in the vacuum manifold.
c. Incorrect wiring to the anti 'run-on' solenoid.
d. Faulty anti 'run-on' solenoid.

Weakening system cut-off solenoid

The weakening device cut-off solenoid is the central of the three solenoids mounted on the platform adjacent to 'B' bank carburetter (see Figs. U4 and U42).

Weakening system cut-off solenoid - To remove

1. Detach the electrical connections, noting the position of the connections to assist identification when assembling.
2. Detach the rubber hose from either side of the solenoid.
3. Unscrew the two 'cheese-headed' mounting screws and withdraw the solenoid.

Weakening system cut-off solenoid - To fit

Fit the cut-off solenoid by reversing the procedure given for removal.

Weakening system cut-off solenoid circuit wiring - To check

1. Connect a test lamp across the two 'Lucar' connections to the solenoid. **Do not disconnect the two connections.**
2. Ensure the engine is cold.
3. Switch on the ignition and start the engine noting that the bulb of the test lamp is illuminated.
4. Run the engine, noting that as the engine warms-up [the inlet air temperature reaches approximately 14° C. (57° F.)] the test lamp bulb should extinguish.
5. Stop the engine and allow to cool, noting that when the engine becomes cold [the air in the intake drops to a temperature of approximately 12° C. (54° F.)] the test lamp bulb again illuminates.

Weakening system cut-off solenoid - To check

1. Detach the carburetter vacuum signal to weakening system cut-off solenoid hose at the solenoid and blank off the hose.

Connect a suitable length of hose to the solenoid connection.

2. Clean the open end of the additional hose.
3. Switch on the ignition.
4. Place the hose in the mouth and apply pressure.
5. If the operation of the solenoid is correct note that the following conditions apply.

a. With a cold engine [i.e. the inlet air temperature below approximately 14° C. (57° F.)] blowing air through the hose **should not** be possible.
b. As the engine warms-up [i.e. an inlet air temperature of approximately 14° C. (57° F.) or above] blowing air through the hose **should** be possible.
c. As the engine again cools [i.e. the inlet air temperature drops below approximately 12° C. (54° F.)] the conditions described in (a) should again apply.

Weakening system lock-out switch

The weakening system lock-out switch is situated in the side of the air intake elbow adjacent to the choke stove take-off pipe and 'B' bank carburetter (see Fig. U42).

Weakening system lock-out switch - To remove

1. Withdraw the protective sheath and detach the electrical connections, noting the position of the connections to assist identification when assembling.
2. Unscrew and remove the three setscrews and spring washers.
3. Withdraw the lock-out switch.

Weakening system lock-out switch - To fit

Fit the lock-out switch by reversing the procedure given for removal.

1. Ensure that the gasket is in a good condition.
2. The setscrews must be fitted with spring washers.
3. The protective sheath must be fitted over the electrical connections.

Weakening system lock-out switch circuit wiring - To check

1. Detach the 9 White/Blue cable from the weakening system lock-out switch.
2. Fit one side of a test lamp to the 9 White/Blue cable and the other side to a good earth.
3. Switch on the ignition noting that the test lamp bulb illuminates.
4. Switch off the ignition noting that the test lamp bulb extinguishes.

Weakening system lock-out switch - To check

1. Withdraw the protective sheath from the electrical connections.
2. Do not disturb any wiring but connect both electrical connections via a test lamp.
3. Ensure that the engine is cold [i.e. intake air temperature below approximately 14° C. (57° F.)] and switch on the ignition.
4. Check that the test lamp bulb is illuminated.

Printed in England
© Rolls-Royce Motors Limited 1978
January 1978
T.S.D. 4200
Australia)

5. Start and run the engine; as the engine warms-up [i.e. the inlet air temperature exceeds approximately 14° C. (57° F.)] the test lamp bulb should extinguish.

Full throttle E.G.R. cut-off micro-switch

The full throttle E.G.R. cut-off micro-switch is mounted on a bracket which is attached to the forward side of 'A' bank carburetter. The micro-switch is operated by a plunger fitted to the throttle linkage (see Fig. U43).

Full throttle E.G.R. cut-off micro-switch - To remove

1. Detach the two Lucar connections adjacent to the micro-switch.
2. Unscrew the two retaining setscrews and withdraw the micro-switch.

Full throttle E.G.R. cut-off micro-switch - To fit

Fit the full throttle E.G.R. cut-off micro-switch by reversing the procedure given for removal noting the following point.

1. After fitting the micro-switch ensure that it is correctly set.

Full throttle E.G.R. cut-off micro-switch circuit wiring To check

1. Disconnect the 9 White and 14 White Green cables at the E.G.R. system cut-off solenoid Lucar connections.

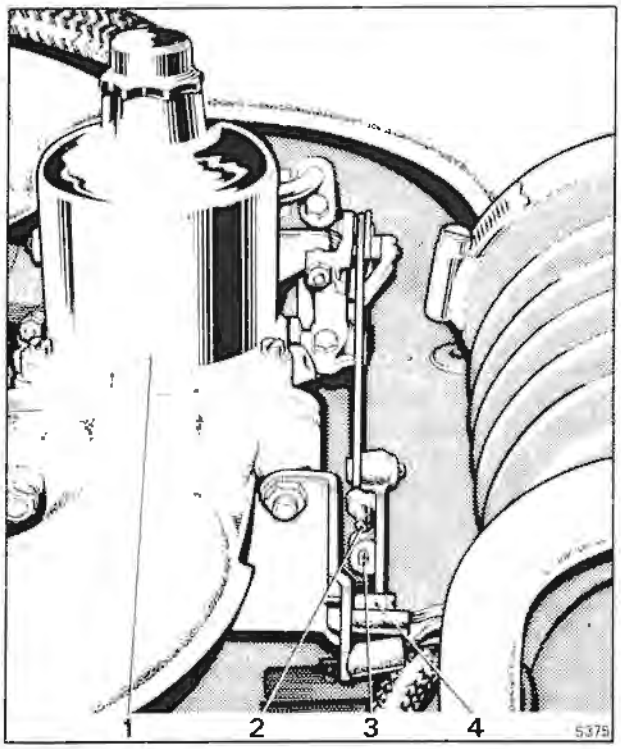

Fig. U43 Full throttle E.G.R. cut-out micro-switch

1 'A' bank carburetter
2 Micro-switch operating plunger
3 Full throttle stop
4 Cut-out micro-switch

2. Connect a test lamp across the two disconnected cables (in place of the solenoid).
3. Detach the two Lucar connections from the full throttle E.G.R. cut-off micro-switch and connect a suitable switch across the cable connection (in place of the micro-switch).
4. Ensure that the engine is cold.
5. Switch on the ignition and note that the test lamp bulb is illuminated.
6. Start and run the engine, as the engine coolant temperature exceeds approximately 14° C. (57° F.) the test lamp bulb should extinguish.
7. Switch on (make the contacts) the switch that has replaced the micro-switch, noting that the test lamp bulb illuminates.

Full throttle E.G.R. cut-off micro-switch - To set

1. It is important to ensure that the engine throttle linkage (refer to Section U5 and Chapter T) and the kick-down micro-switch (refer to Chapter T) are correctly set.
2. Depress the accelerator pedal until it just touches the toeboard mounted kick-down switch (further depression of the pedal requires increased effort).
3. Hold the accelerator in this position.
4. Release the lock-nut and screw the spring loaded operating button (see Fig. U43) away from the E.G.R. full throttle cut-out micro-switch.
5. Screw the spring loaded operating button towards the micro-switch until the micro-switch is heard to 'click'. Secure the lock-nut.
6. Depress the accelerator to operate the toeboard kick-down micro-switch and then set the full throttle stop (see Fig. U43) to prevent overloading of the micro-switch.
7. The full throttle stop should be set so that the throttle movement is stopped just before the full spring travel of the micro-switch spring loaded operating button is reached.

Full throttle E.G.R. cut-off micro-switch - To check

To check the full throttle E.G.R. cut-off micro-switch carry out the instructions given in E.G.R. system cut-off solenoid circuit wiring - To check, noting in particular Operation 6.

Section U8

Fault diagnosis

Symptoms	Possible Cause
1. Engine will not start. (Starter motor operating)	1. (a) Ignition circuit broken. (b) Failed anti 'run-on' solenoid or failure of electrical supply circuit. (c) Ignition system faulty. (d) Damaged or contaminated ignition high tension circuit. (e) Blocked fuel feed line, fouled float chamber filters. (f) Faulty choke bi-metal coil. (g) Choke solenoid inoperative. (h) Faulty choke 'fast idle' mechanism. (i) Air leak into induction system. (j) Faulty hot idle mixture compensator. (k) Weakening device filter blocked, weakening device air intake non return valve failed or blockage in rubber connecting hoses. (l) Faulty weakening device cut off solenoid or failure of electrical supply circuit. (m) Faulty weakening device control switch or failure of electrical supply circuit. (n) Dislodged venturi in weakening device. (o) Flooding of carburetter float chamber or jet. (p) Exhaust gas recirculation valve(s) failed.
2. Engine idles very roughly.	2. (a) Ignition system faulty. (b) Fouled sparking plugs. (c) Damaged or contaminated ignition high tension circuit. (d) Air leak into induction system. (e) Faulty hot idle compensator. (f) Weakening device filter blocked, weakening device air intake non-return valve failed or blockage in rubber connecting hoses. (g) Badly worn or damaged carburetter control linkage. (h) Flooding of carburetter float chamber or jet. (i) Sticking carburetter piston. (j) Incorrect operation of carburetter jet compensation. (k) Fouled carburetter float chamber or jet. (l) Exhaust gas recirculation valve(s) failed. (m) Incorrect operation of temperature controlled air intake system.
3. Engine stalls.	3. (a) Ignition circuit broken. (b) Failed anti 'run-on' solenoid or failure of electrical supply circuit. (c) Ignition system faulty. (d) Damaged or contaminated ignition high tension circuit. (e) Blocked fuel feed line, fouled float chamber filters.

Printed in England
© Rolls-Royce Motors Limited 1978
January 1978
S.D. 4200
Australia)

Symptoms	Possible Cause
3. Engine stalls (continued)	(f) Air leak into induction system. (g) Faulty hot idle mixture compensator. (h) Weakening device filter blocked, weakening device air intake non-return valve failed or blockage in rubber connecting hoses. (i) Badly worn or damaged carburetter control linkage. (j) Flooding of carburetter float chamber or jet. (k) Sticking carburetter piston. (l) Incorrect operation of carburetter jet compensation. (m) Fouled carburetter float chamber or jet. (n) Exhaust gas recirculation valve(s) failed.
4. (i) Engine shows signs of power loss evident at high speeds and loading. (ii) Engine misfires particularly on hard acceleration from low speed.	4. (a) Ignition system faulty. (b) Fouled sparking plugs. (c) Damaged or contaminated ignition high tension circuit. (d) Blocked fuel feed line, fouled float chamber filters. (e) Choke system operation incorrect. (f) Sticking carburetter piston. (g) Fouled carburetter float chamber or jet. (h) Faulty exhaust gas recirculation full throttle cut-out switch or failure of electrical supply circuit. (i) Exhaust gas recirculation valve(s) failed. (j) Fouled exhaust gas recirculation valve(s) cut-out solenoid or electrical supply circuit.
5. Engine hesitates or misfires under light load.	5. (a) Failed anti 'run-on' solenoid or failure of electrical supply circuit. (b) Ignition system faulty. (c) Fouled sparking plugs. (d) Damaged or contaminated ignition high tension circuit. (e) Blocked fuel feed line, fouled float chamber filters. (f) Air leak into induction system. (g) Faulty hot idle mixture compensator. (h) Weakening device filter blocked, weakening device air intake non-return valve failed or blockage in rubber connecting hoses. (i) Dislodged venturi in weakening device. (j) Flooding of carburetter float chamber or jet. (k) Incorrect operation of carburetter jet compensation. (l) Fouled carburetter float chamber or jet. (m) Exhaust gas recirculation valve(s) failed. (n) Incorrect operation of temperature controlled air intake system.
6. Increase in fuel consumption.	6. (a) Ignition system faulty. (b) Faulty choke bi-metal coil. (c) Choke system operation incorrect. (d) Air leak into induction system. (e) Faulty hot idle mixture compensator. (f) Weakening device filter blocked, weakening device air intake non-return valve failed or blockage in rubber connecting hoses.

Symptoms	Possible Cause
6. Increase in fuel consumption (continued)	(g) Faulty weakening device cut-off solenoid or failure of electrical supply circuit. (h) Faulty weakening device control switch or failure of electrical supply circuit. (i) Air leak in mixture weakening system. (j) Flooding of carburetter float chamber or jet. (k) Sticking carburetter piston. (l) Incorrect operation of carburetter jet compensation. (m) Incorrect purge flow rate. (n) Exhaust gas recirculation valve(s) failed.
7. Decrease in fuel consumption.	**7.** (a) Air leak in mixture weakening system. (b) Incorrect operation of carburetter jet compensation. (c) Incorrect purge flow rate. (d) Faulty exhaust gas recirculation temperature control switch or failure of electrical supply circuit. (e) Exhaust gas recirculation valve(s) failed.
8. Engine 'backfires' on overrun.	**8.** (a) Ignition system faulty. (b) Air leak into induction system. (c) Faulty hot idle mixture compensator. (d) Exhaust gas recirculation valve(s) failed.
9. Sudden increase in engine idle speed.	**9.** (a) Faulty choke 'fast-idle' mechanism. (b) Failed carburetter overrun valve.
10. Excessive noise from air injection pump or system.	**10.** (a) Faulty or damaged air injection pump, relief or check valves, connecting hoses or pipes.

Printed in England
© Rolls-Royce Motors Limited 1978
January 1978
T.S.D. 4200 (Australia)

Section U9

Workshop tools

Tool Number	Description
RH 8090	Pliers - wire hose clips
RH 8725	Flowmeter (rotameter type)
RH 8841	Dial gauge - carburetter piston lift
RH 8880	Setting jig - throttle levers
RH 8945	Connector - choke stove pipe
RH 9086	Fitting tool - carburetter piston ball race clip
RH 9096	Fitting tool - 'A' bank mixture adjusting screw tamperproof seal
RH 9097	Fitting tool - 'B' bank mixture adjusting screw tamperproof seal
RH 9105	Kit - to adapt RH 8841 to fit S.U. HIF 7 carburetters

Printed in England
© Rolls-Royce Motors Limited 1978

January 1978
T.S.D. 4200
(Australia)

Printed in England
© Rolls-Royce Motors Limited 1978
January 1978
T.S.D. 4200
Australia

Section U10

Running changes

No 1 Fitting of an Air Diverter Valve

Air diverter valve
After certification of the 1977/78 model year specification, an air diverter valve has been fitted into the air injection system in place of the three-way connection block.

The diverter valve performs an important function in addition to housing the pressure relief valve for the air pump.

Backfire protection

Following rapid throttle closure, the inlet manifold pressure drops suddenly causing fuel to be vapourised from the manifold walls which results in a mixture too rich to burn in the cylinders. This mixture combined with the air injected into the exhaust ports could cause backfiring.

To prevent backfiring the diverter valve, triggered by manifold depression, diverts the injected air from the exhaust ports for a short period of time.

There are no servicing requirements for the air diverter valve. However, the following list of engine malfunctions could be caused by a faulty air diverter valve.

1. Engine hesitates or misfires under light load
2. Increase in fuel consumption
3. Excessive noise from air injection pump or system
4. Engine backfires on overrun

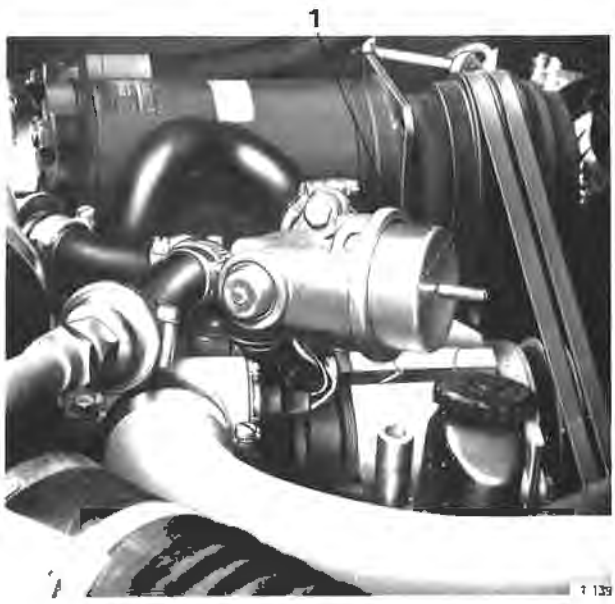

Fig. 1 Air diverter valve assembly
1 Air diverter valve

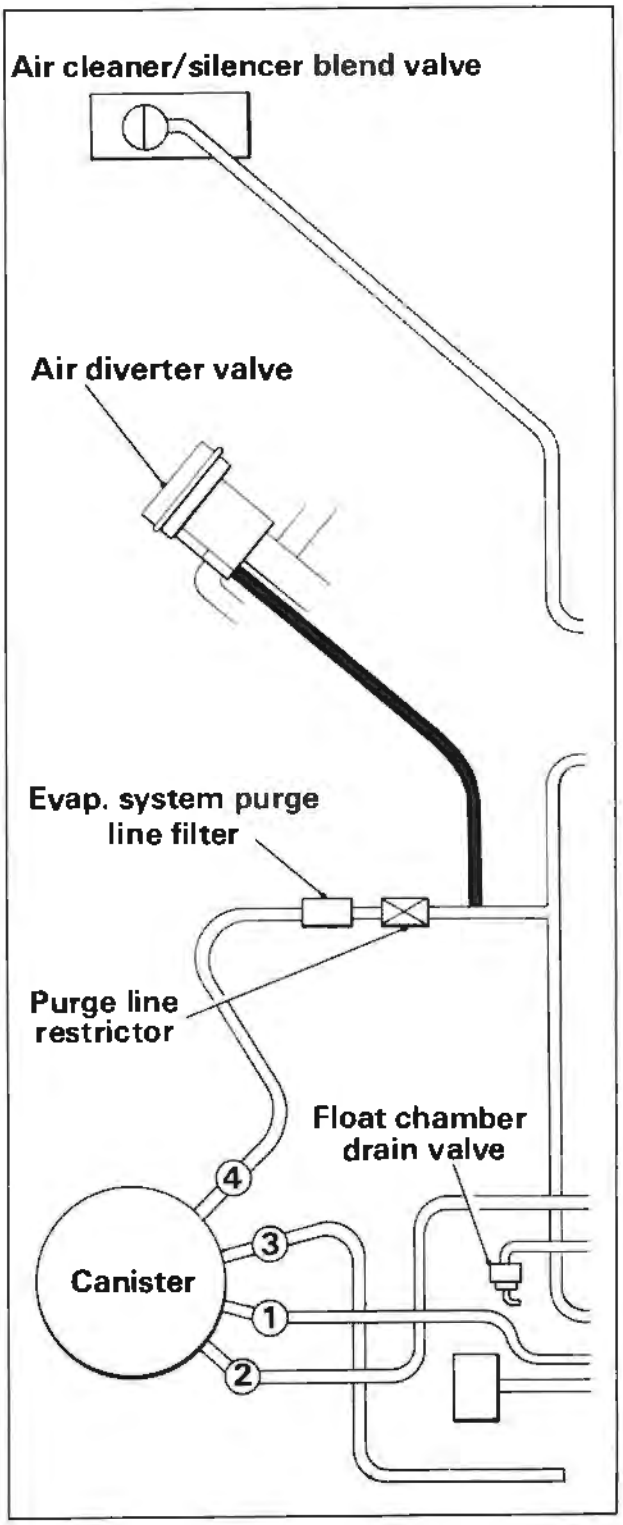

Fig. 2 Hose routing diagram - 1978 model year cars

Chapter U

Emission control systems

Applicable to 1979 model year cars destined for Australia

Section

U1 Introduction
U2 Exhaust emission control system
U3 Fuel evaporative emission control system
U4 Crankcase emission control system
U5 Carburetters and Automatic choke system
U6 Ignition system
U7 Electrical components
U8 Fault diagnosis
U9 Workshop tools
U10 Running changes

Printed in England

© Rolls-Royce Motors Limited 1979

January 1979

TSD 4200
(Australia
1979 Model Year)

Chapter U - 1979 Australia

Issue record sheet 1

July 1980

The dates quoted below refer to the issue date of individual pages within this chapter.

Section	U1	U2	U3	U4	U5	U6	U7	U8	U9	U10
Page No.										
1	Jan 79	Jan 79	Jan 79	Jan 79	Jan 79	Nov 79	Jul 80	Jan 79	Jan 79	Jan 79
2	Jan 79	Jan 79	Jan 79		Jan 79	Nov 79	Jul 80	Jan 79		
3	Jan 79	Jan 79	Jan 79		Jan 79		Jan 79	Jan 79		
4	Jan 79	Jan 79	Jan 79		Jan 79		Jan 79			
5		Jan 79	Jan 79		Jan 79					
6		Jan 79	Jan 79		Jan 79					
7		Nov 79	Jan 79		Jan 79					
8			Jan 79		Jan 79					
9					Jan 79					
10					Jan 79					
11					Jan 79					
12					Jan 79					
13					Jan 79					
14										
15										
16										
17										
18										
19										
20										
21										
22										
23										
24										
25										
26										
27										
28										
29										
30										
31										
32										
33										
34										
35										
36										
37										
38										
39										
40										
41										
42										
43										
44										
45										
46										
47										
48										

Printed in England

© Rolls-Royce Motors Limited 1980

Section U1

Introduction

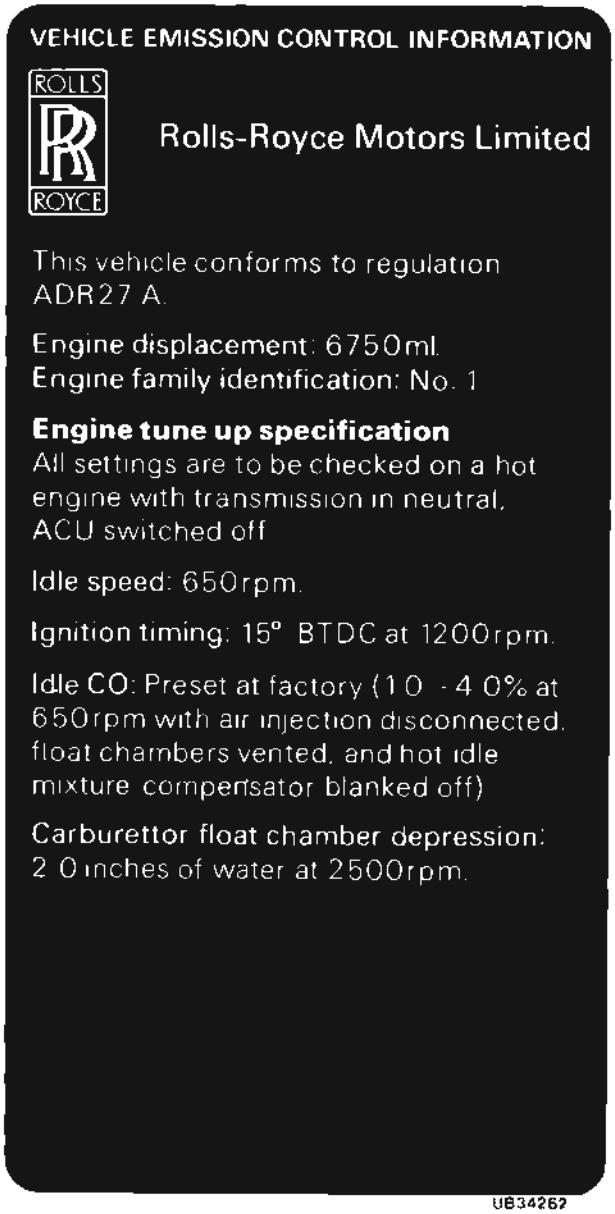

Fig. U1 Emission control certification label

This Chapter has been written specifically for cars fitted with Emission Control Systems conforming to the Australian emission control regulations, applicable to 1979 model year new motor vehicles.

It is important therefore that Service Personnel fully understand the contents of this Chapter so that the special servicing can be correctly carried out.

Rolls-Royce and Bentley motor cars conforming to the above regulations and produced to the 1979 model year specification can be identified as follows.

a Emission Control Certification Label
An Emission Control Certification Label (illustrated) located on the wing valance to the rear of the right-hand front suspension spring cover.

b Car Serial Number
From this number the date of manufacture can be determined.

Engine compartment
Figures U2 and U3 overleaf show the location of the major emission control system components within the engine compartment.

Hose routing diagram
Figure U4 within the Introduction section gives details of the various hose 'runs' and connections in and around the engine compartment, that are associated with the emission control systems components.

Torque tightening
When fitting the various emission control systems components, ensure that the securing nuts and set-screws are tightened to the torque figures given in Chapter P, unless otherwise stated in this Chapter.

Running changes
Before commencing any work on these cars, refer to Section U10.

Printed in England
© Rolls-Royce Motors Limited 1979

January 1979
TSD 4200
(Australia
1979 Model Year)

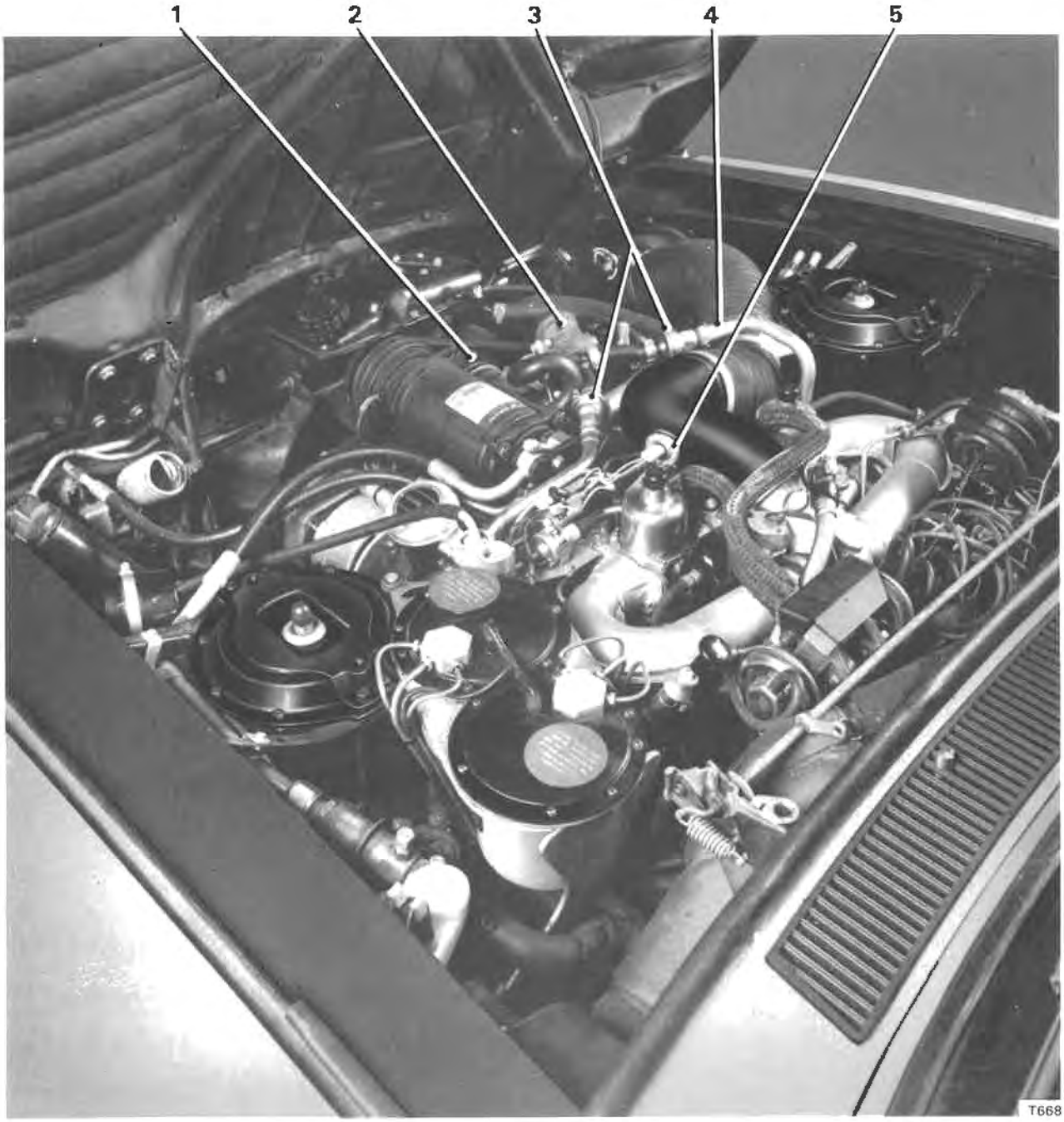

Fig. U2 Engine compartment details (L.H. side)

1 Air pump
2 Air diverter valve
3 Check valves
4 'A' bank air manifold
5 Weakening and E.G.R. systems cut-out switch

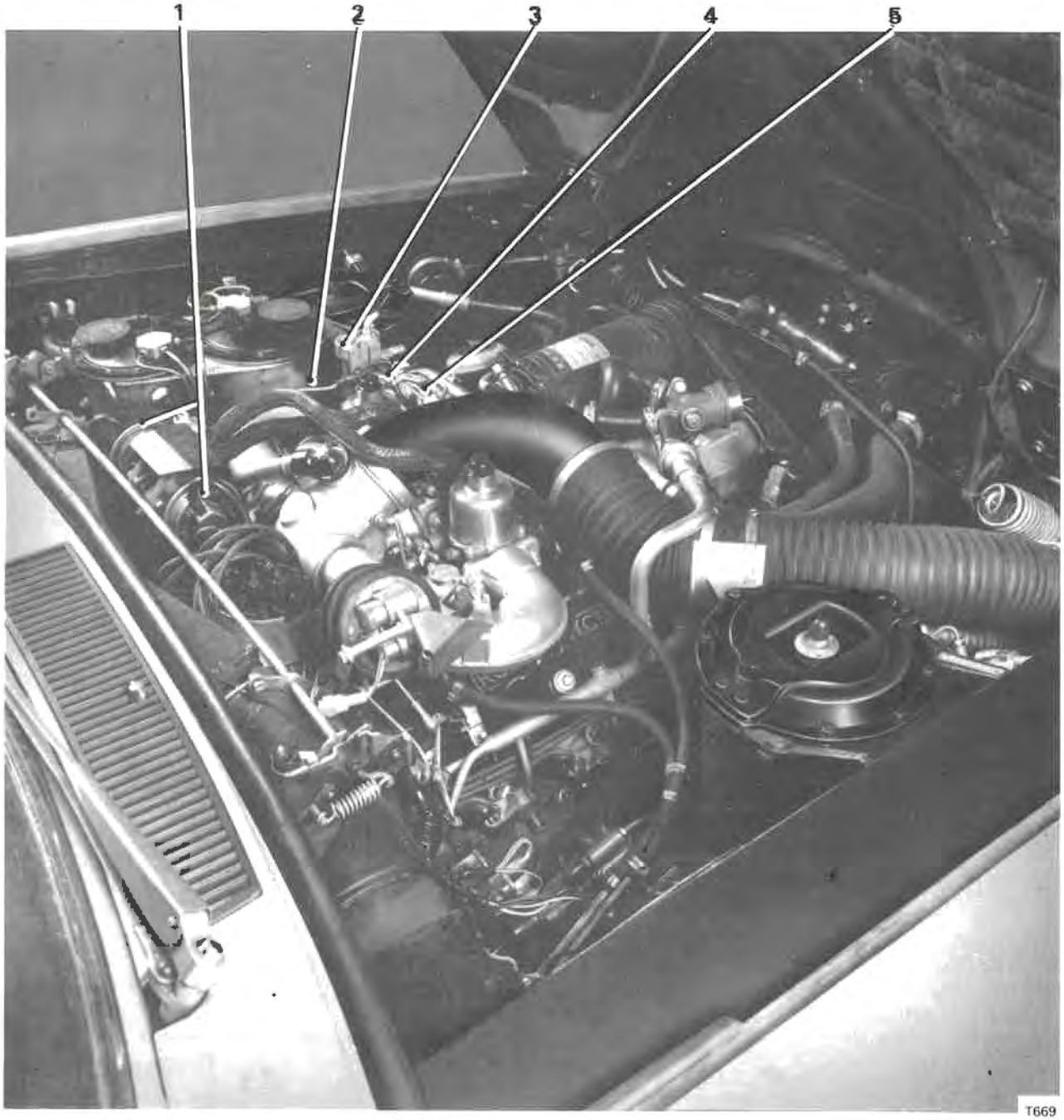

Fig. U3 Engine compartment details (R.H. side)

1 Exhaust gas recirculation valves
2 Exhaust gas recirculation valves signal hose
3 Weakening device assembly
4 Weakening and E.G.R. systems cut-out solenoid
5 Anti 'run-on' solenoid

Printed in England

© Rolls-Royce Motors Limited 1979

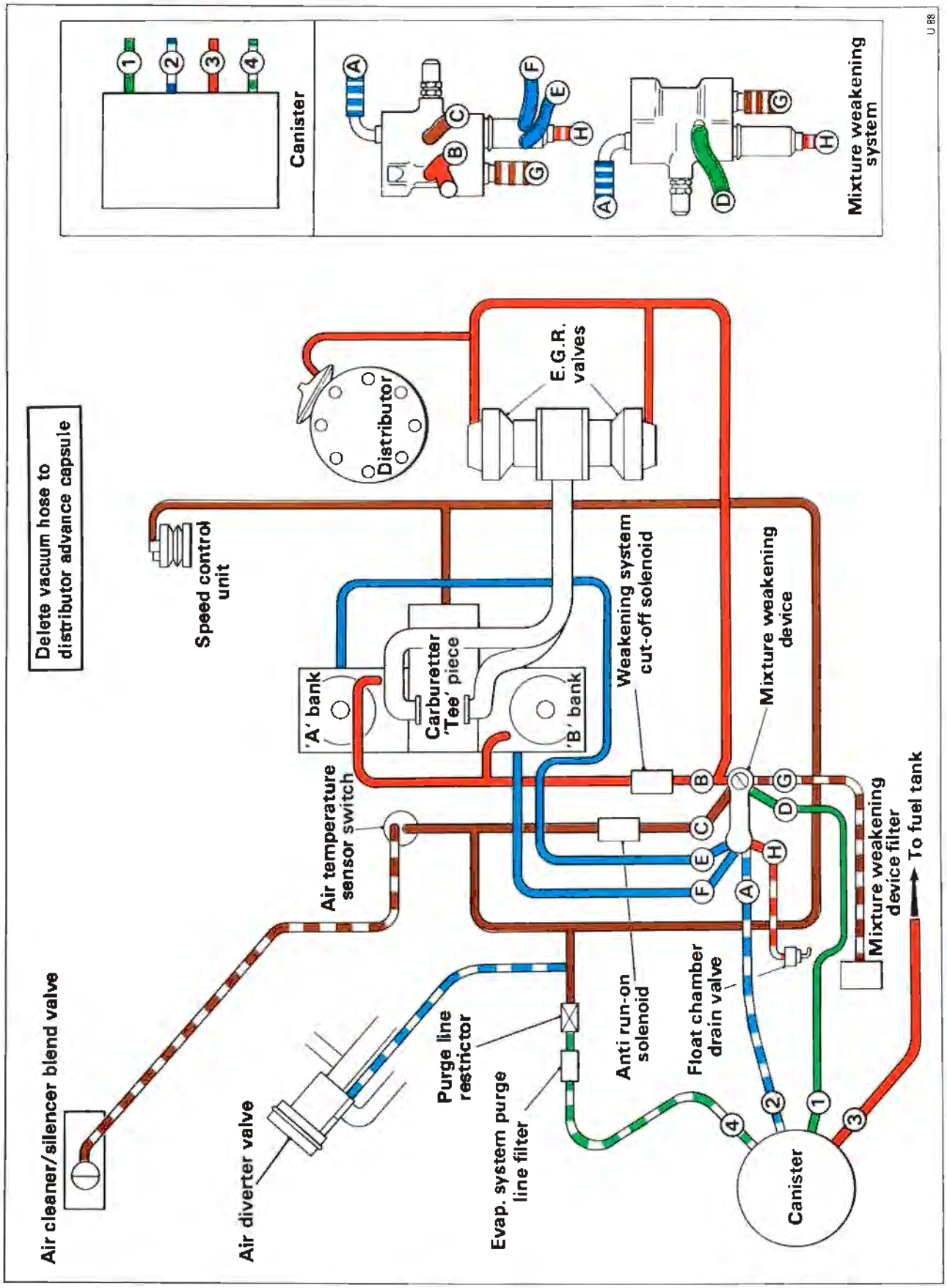

Fig. U4 Hose routing diagram - 1979 model year cars

Section U2

Exhaust emission control system

The Exhaust Emission Control System is designed to reduce the carbon monoxide, unburnt hydrocarbon and oxides of nitrogen content in the exhaust gases.

The system does not eliminate the danger caused by inhaling exhaust gases in a confined area.

Air from the atmosphere is drawn into the engine driven air injection pump through a centrifugal filter. From the pump, a quantity of air proportional to engine speed passes through check valves to the air manifolds and then into the exhaust ports. This air combines with the exhaust gases discharged from the combustion chambers and promotes the oxidation process in the exhaust system. The gases then pass through the exhaust system to atmosphere.

In addition, a proportion of the exhaust gas from the exhaust balance pipe situated between the two downtake pipes, is recirculated through vacuum operated metering valves into the carburetter 'tee' piece, just downstream of the throttle plates. The recirculated exhaust gas mixes with the inlet charge of fuel/air mixture in the induction manifold and is distributed to the cylinders, lowering the peak combustion temperature and reducing oxides of nitrogen emissions.

Before commencing work on the exhaust emission control system, care should be taken to ensure that the relevant components are not hot.

The system is illustrated in Figure U5 and comprises the following main components.

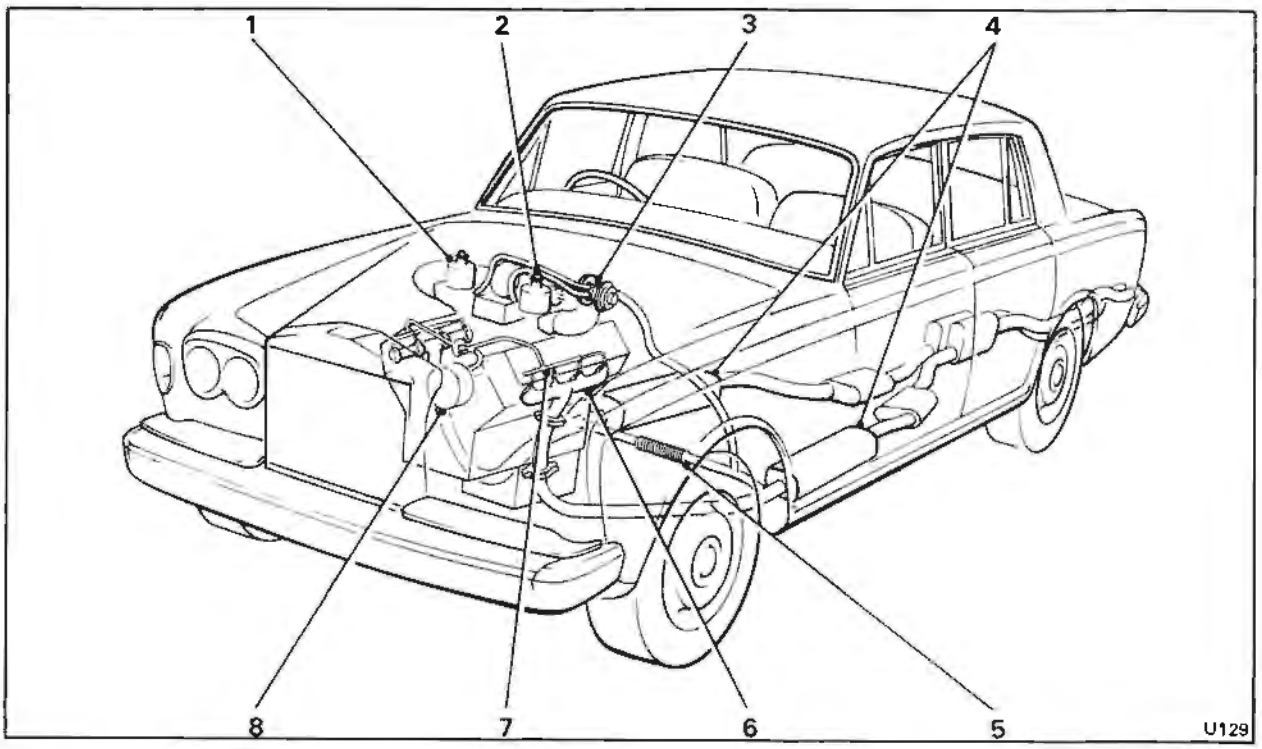

Fig. U5 Exhaust emission control system

1 'A' bank carburetter
2 'B' bank carburetter
3 Exhaust gas recirculation valves
4 Exhaust system front silencers
5 Exhaust system balance pipe
6 'B' bank exhaust manifold
7 'B' bank air manifold
8 Air pump

Printed in England

© Rolls-Royce Motors Limited 1979

Air injection system (see Fig. U6)
Air manifolds
Air pump
Check valves
Centrifugal air filter
Air diverter valve

Exhaust gas recirculation system (E.G.R.) (see Fig. U9)
Cut-off solenoid (see Section U7)
Cut-out switch (see Section U7)
Distribution pipes
E.G.R. valves
E.G.R. valves heatshield
Feed pipe
Kickdown and Full throttle E.G.R. cut-out micro-switch (see Section U7)

Exhaust system (see Fig. U5)
(For details of the Exhaust system refer to Chapter Q).

For details of the servicing and maintenance requirements of the Exhaust Emission Control System, refer to the Service Schedules Manual - T.S.D. 4117.

Air injection system (see Figs. U5 and U6)
A detailed description of the air injection system is given at the beginning of this section.

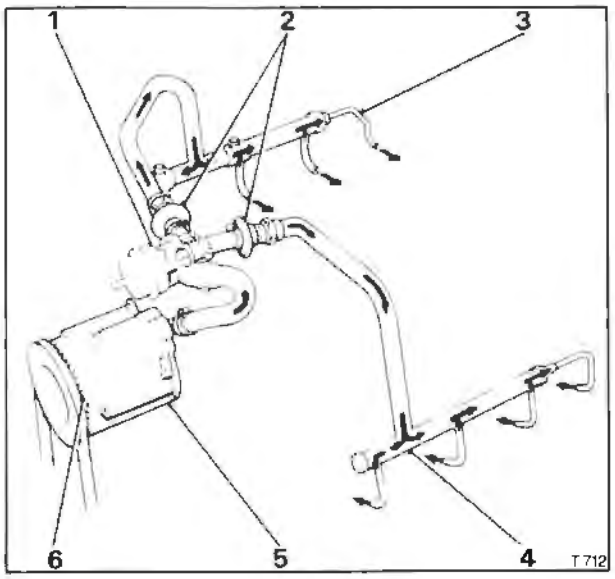

Fig. U6 Air injection system
1 Air diverter valve
2 Check valves
3 'A' bank air manifold
4 'B' bank air manifold
5 Air pump
6 Air pump intake

Air injection system - Leak check
Check the air injection system for air leaks by carrying out the following sequence of operations.
1. Ensure that the ignition is switched off.
2. Visually inspect the condition of all hoses, pipes and joints associated with the air injection system.
3. Ensure that all worm drive clips are tight.
4. Start the engine and listen carefully for any evidence of an air leak from the system.
5. If an air leak is suspected it is permissible to coat the component or hose with a soap solution; soap bubbles will confirm an air leak.

Air injection system - Fault diagnosis
To diagnose malfunctioning of the air injection system refer to Section U8 - Fault diagnosis.

Air manifolds
The air manifolds convey air from the check valves to the engine exhaust ports. One air manifold is fitted to each bank of cylinders and is identified as 'A' bank air manifold or 'B' bank air manifold.

To remove an air manifold, unscrew the check valve union and the four ¾ in. A/F adapters in the cylinder head.

The 'A' bank air manifold is reasonably straight forward to withdraw but 'B' bank air manifold will require the disconnecting of several other hoses and pipes (e.g. choke stove pipes, fuel evaporative weakening device hoses and pipes, etc.), to facilitate withdrawal.

Fit the air manifolds by reversing the procedure given for removal, noting that the check valve union has a tapered thread. All the adapters in the cylinder heads should be torque tightened to the figures given in Chapter P.

Air pump
The air pump is of the rotary vane type and is belt driven from the engine coolant pump. The centrifugal air filter is an integral part of the pump and is situated between the pump body and the pump driving pulley.

Air pump - To remove (see Fig. U7)
1. Disconnect the battery (refer to Chapter M).
2. Unscrew the worm drive clip and detach the hose from the pump to the air diverter valve, at the pump. Blank off the hose and pump connections to prevent the ingress of dirt, etc.
3. Slacken the two $^{9}/_{16}$ in. A/F setscrews on the drive belt adjustment strut; remove the upper bolt.
4. Remove the drive belt from the pulley.
5. Support the air injection pump and unscrew and remove the $^{9}/_{16}$ in. A/F mounting setscrew situated on the opposite side of the pump pulley.

Air pump - To fit
Fit the air pump by reversing the procedure for

removal noting the following.
1. Ensure that the driving belt is adjusted so that an applied force of 5,5 kg. (12 lb.) mid-way between the air injection pump pulley and the coolant pump pulley causes the belt to deflect 9,5 mm. (0.375 in.).

Air pump pulley.
1. To remove, unscrew and remove the three set-screws situated around the centre of the pulley. Withdraw the pulley.
2. To fit the pulley, reverse the procedure given for removal ensuring that the setscrews are torque tightened to the correct figure (see Chapter P).

Check valves
The check valves are non-return valves (one-way valves) and one is fitted into the air injection system between the air pump and the air manifolds, for each bank of cylinders.

The check valves prevent the backflow of exhaust gases into the air lines or air pump, they operate whenever the exhaust back pressure exceeds the air pump delivery pressure at high speed and/or in the case of air pump drive belt failure.

To remove a check valve, slacken the worm drive clip situated on the air pump to check valve hose. Unscrew the union from the air manifold and withdraw the check valve. Fit a check valve in the reverse order.

Air diverter valve (see Fig. U8)
The diverter valve performs an important function in addition to housing the pressure relief valve for the air pump.

Backfire protection
Following rapid throttle closure, the inlet manifold pressure drops suddenly causing fuel to be vapourised from the manifold walls which results in a mixture too rich to burn in the cylinders. This mixture combined with the air injected into the exhaust ports could cause backfiring.

To prevent backfiring the diverter valve, triggered by manifold depression, diverts the injected air from the exhaust ports for a short period of time.

Air diverter valve - To check
The air diverter valve is a non-serviceable component. If the operation of the component is suspect, the following check should be carried out before it is replaced.
1. Ensure that the parking brake is firmly applied and the vehicle is in 'Park.'
2. Start and run the engine at 2 000 r.p.m.
3. Ensure that **air does not escape** from the air diverter valve exhaust ports situated around the body of the air diverter valve.
4. If air does escape from the air diverter valve exhaust ports, check the pressure relief valve within the assembly as follows.
5. Blank off the two connections to the check valves.

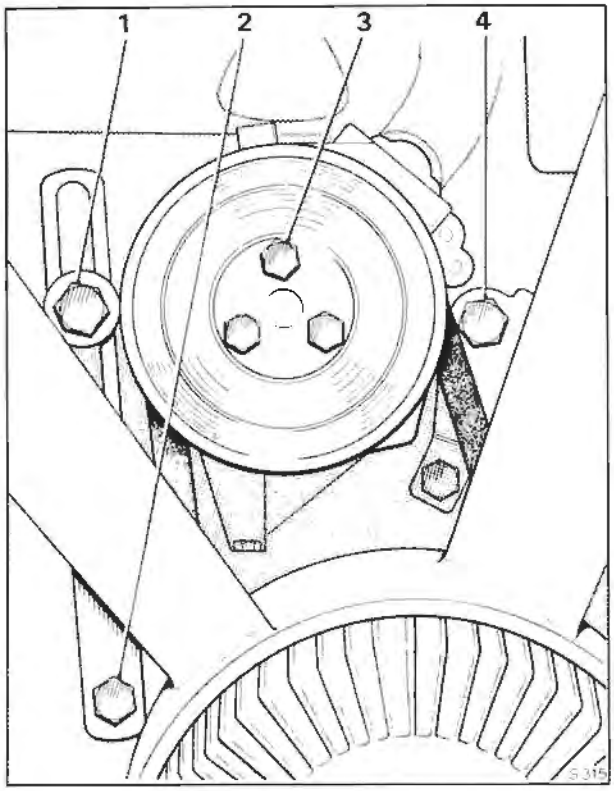

Fig. U7 Air injection pump
1 Adjustment strut upper setscrew
2 Adjustment strut pivot setscrew
3 Pulley retaining setscrews
4 Air pump mounting setscrew



Fig. U8 Air diverter valve assembly
1 Air diverter valve

Printed in England
© Rolls-Royce Motors Limited 1979

6. Apply air pressure to the air diverter valve via the air pump connection.
7. Ensure that the pressure relief valve works within the acceptable limits quoted.
0,5 kg/sq.cm. to 0,6 kg/sq.cm.
(7.4 lb/sq.in. to 8.4 lb/sq.in.)

Air diverter valve - To remove and fit
1. Unscrew the three worm drive clips which secure the three larger diameter rubber hoses to the air diverter valve and withdraw the hoses.
2. Withdraw the smaller diameter rubber hose from the air diverter valve.
3. Using a 7/16 in. A/F spanner unscrew and remove the nut securing the air diverter valve to the support bracket. Collect the washer.
4. Hold the diverter valve and withdraw the bolt; remove the diverter valve.
5. Fit the diverter valve by reversing the procedure.

Exhaust gas recirculation system (E.G.R.)
(see Figs. U5 and U9)
A detailed description of the exhaust gas recirculation system (E.G.R.) is given at the beginning of this section.

Distribution pipes
The distribution pipes convey the recirculated exhaust gas from the E.G.R. valves into the carburetter 'tee' piece.

Distribution pipes - To remove
1. Using a 7/16 in. A/F spanner unscrew and remove the two nuts and washers securing the distribution pipes to the E.G.R. valve mounting block.
2. Unscrew the 7/16 in. A/F setscrews retaining the heatshield to 'B' bank air horn; collect the washers.
3. Ease the mounting block rearward to free the joint face; discard the gasket.
4. Support the weight of the distribution pipes.
5. Unscrew and remove the four 2 B.A. setscrews and washers securing the two distribution pipe flanges to the carburetter 'tee' piece.
6. Withdraw the distribution pipes and discard the gaskets.

Distribution pipes - To fit
Fit the distribution pipes by reversing the procedure given for removal, noting the following points.
1. Ensure that all joint faces are clean and free from carbon deposits.
2. Coat the joint faces and gaskets at the carburetter 'tee' piece with 'Wellseal'.

Distribution pipes - To clean
1. Remove the distribution pipes as described in Distribution pipes - To remove.

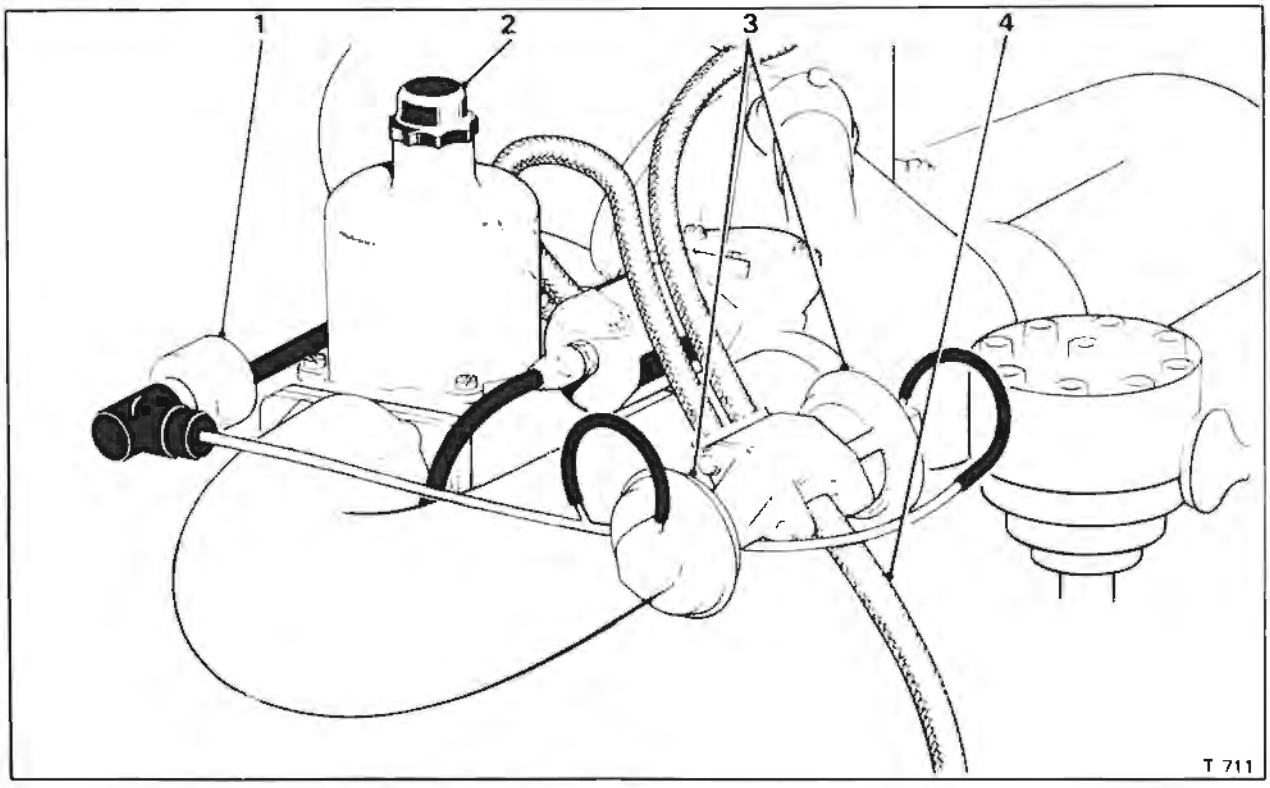

Fig. U9 **Exhaust gas recirculation system**
1 E.G.R. cut-off solenoid
2 'B' bank carburetter
3 E.G.R. valves
4 E.G.R. feed pipe

2. With a pointed scraper clean as much carbon deposit as possible from inside the distribution pipes and the joint faces. Particular attention should be given to the carburetter end of the pipes, because the majority of the carbon deposit will be found in this area.
3. Using wire brushes complete the cleaning operation on the distribution pipes.
4. With a pointed scraper remove the carbon deposits from the carburetter 'tee' piece connection orifices.
5. Before fitting the distribution pipes thoroughly blow-out the pipes and carburetter 'tee' piece connections with compressed air.
6. Fit the distribution pipes as described in Distribution pipes - To fit.

E.G.R. valves (see Fig. U10)
A proportional flow recirculation system is used. Exhaust gas from the balance pipe between the two downtakes of the dual exhaust system passes through twin metering orifices and is recirculated into the carburetter 'tee' piece. Atmospheric pressure is maintained downstream of the metering orifices by means of the control valves so that the recirculation flow is proportional to the relative effective areas of the metering orifices and the main exhaust system.

Dilution of the inlet charge with exhaust gas lowers the peak combustion temperature and reduces the formation of oxides of nitrogen.

Twin vacuum operated control valves each with an integral pressure transducer are used and the metering orifice of each valve is incorporated in an extension of the valve seat. A carburetter throttle gated vacuum signal is used to operate the valve. This signal is modulated by the integral transducer valve and applied to the control valve diaphragm so that the control valve lift is adjusted to maintain a constant control pressure, just above atmospheric pressure between the metering orifice and the control valve seat.

When the engine load is increased, the control pressure exceeds the transducer valve setting and the transducer valve closes applying the full vacuum signal to the control valve diaphragm and thus opening the control valve and increasing the E.G.R. flow. Similarly, as the engine load is reduced, the control pressure becomes less than the transducer valve setting and the transducer valve opens, venting the diaphragm chamber to atmosphere and causing the control valve to close and reduce the E.G.R. flow. The transducer valve constantly cycles adjusting the control valve lift to maintain a constant control pressure under all normal operating conditions.

The use of a throttle gated vacuum signal ensures complete control valve closure at idle to maintain good idle quality.

To improve starting and drive-away under low temperature conditions a solenoid valve (see

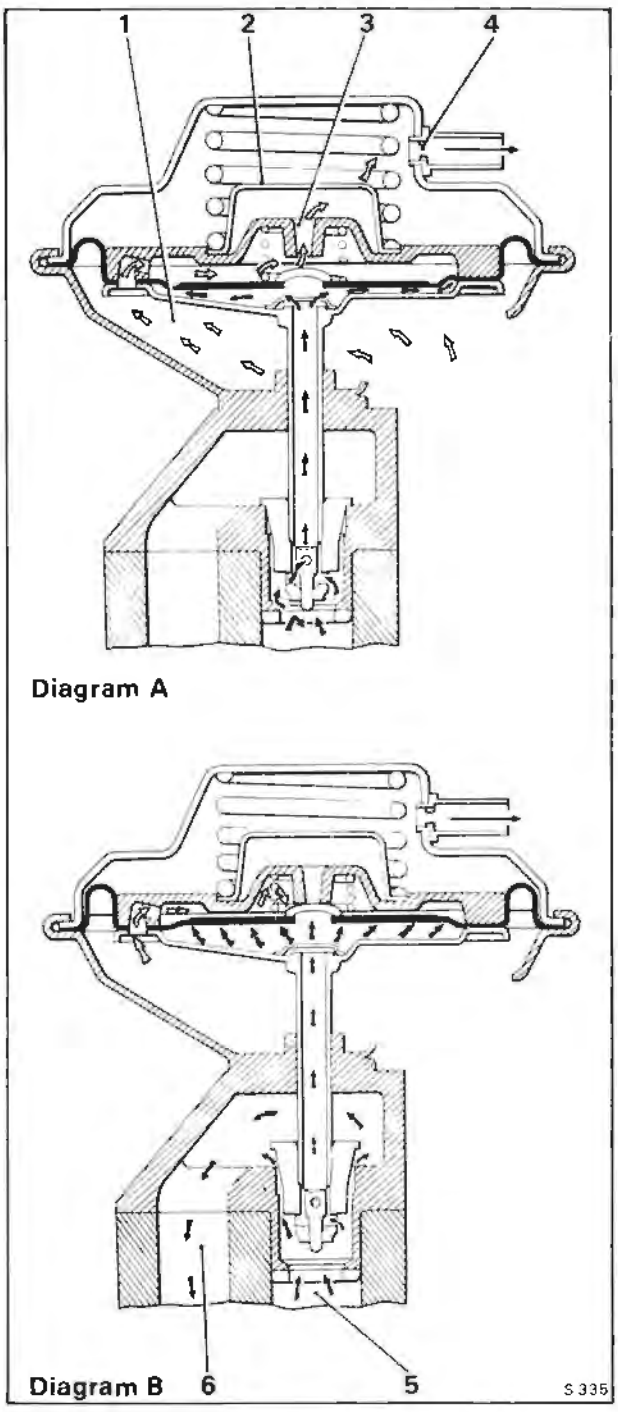

Fig. U10 Exhaust gas recirculation valve
Ambient air ⇦
Exhaust gas ⬅

Diagram A - Exhaust pressure below operating value
1 Ambient air
2 Air filter
3 Air bleed
4 Restrictor

Diagram B - Exhaust pressure above operating value
5 Exhaust gas from balance pipe
6 Exhaust gas to carburetter 'tee' piece

Printed in England
© Rolls-Royce Motors Limited 1979

Section U7) interrupts the carburetter vacuum signal to the E.G.R. valves until a predetermined temperature is reached.

A micro-switch operated by the accelerator pedal (see Section U7) also controls this solenoid to provide E.G.R. cut-out at full throttle. At high engine speed the exhaust gas back pressure is high. As a result, the integral transducer valve directs full carburetter vacuum signal to the control valves. At high engine speed under full throttle operation the air intake restriction is sufficient to produce a carburetter vacuum signal large enough to open the control valves, this results in excessive flow under these conditions which would seriously degrade performance and reduce the safety margin for overtaking.

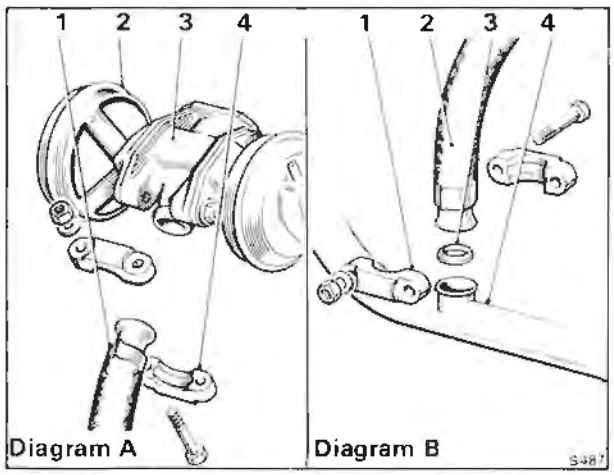

Fig. U11 E.G.R. feed pipe joints

Diagram A - Upper joint
1 Feed pipe
2 E.G.R. valve
3 E.G.R. valve mounting block
4 Clamp bracket

Diagram B - Lower joint
1 Clamp bracket
2 Feed pipe
3 Sealing ring
4 Exhaust balance pipe

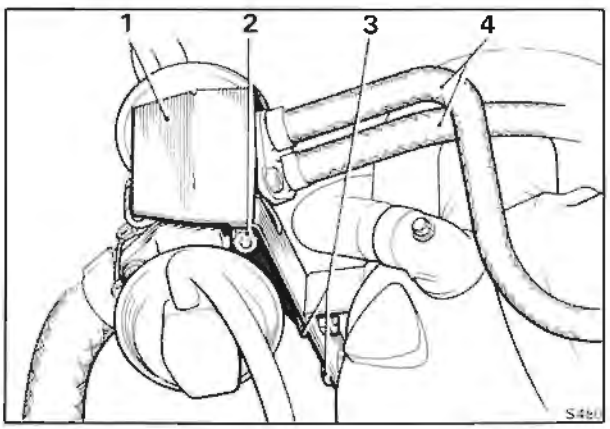

Fig. U12 E.G.R. heatshield
1 Heatshield
2 Retaining nut
3 Retaining screws
4 Distribution pipes

E.G.R. valves - To remove

1. Detach the small diameter rubber hose from the valve.
2. Unscrew and remove the two ½ in. A/F nuts retaining the valve to the mounting flange; collect the two washers.
3. Withdraw the valve and remove the gasket from the mounting flange.
4. Repeat Operations 1 to 3 inclusive on the second valve.

E.G.R. valves - To fit

Fit the valves by reversing the procedure for removal, noting the following points.

1. Ensure that the valve pintle (see Fig. U10) is secure on the valve stem.
2. Ensure that the valve and mounting flange joint faces are clean and free from carbon deposits.
3. Always use a new mounting flange gasket.

E.G.R. valves - To clean

1. Remove the valves as described in E.G.R. valves - To remove.
2. Using a scraper, remove all carbon film from the valve and mounting flange faces; complete the operation with a wire brush.
3. Clean the carbon from the valves using a wire brush fitted into a portable drill. Take care not to damage the valve seating area.
4. Thoroughly blow out the valves with compressed air to ensure that all loose carbon particles are removed.
5. Upon completion of the cleaning operations, fit the valves to the engine mounting flange as described in E.G.R. valves - To fit.

E.G.R. valves - To check

The E.G.R. system is automatically controlled by exhaust backpressure to maintain a constant E.G.R. proportion over normal road load conditions. Checks to ensure the correct operation of the valves are only required under no load conditions as follows.

1. Connect an electric impulse tachometer to the engine in accordance with the manufacturer's instructions.
2. Ensure that the parking brake is firmly applied and that the gear range selector is in the 'Park' position.
3. Ensure that the pressure tapping cap fitted to the weakening device is correctly tightened.

Start and run the engine until normal operating temperature is attained.

4. Ensure that the engine has run for at least 25 mins. after the engine coolant thermostat has opened.
5. Allow the engine to return to the idle speed.
6. Increase the engine speed slowly noting the operation of the E.G.R. valves.
7. The E.G.R. valves should commence to open between 800 r.p.m. and 1 100 r.p.m.

If the valves either fail to open or open late check for the following possible causes.
a. Failed E.G.R. cut-out switch (see Section U7).
b. Failed E.G.R. cut-off solenoid (see Section U7).
c. Failed E.G.R. full throttle cut-out micro-switch (see Section U7).
d. Leak or blockage in the carburetter signal pipe to weakening device cut-off solenoid.
e. Leak or blockage in the E.G.R. valve signal pipe or hose from the E.G.R. cut-out solenoid to the E.G.R. valves.
f. Advanced ignition timing (see Section U6).

If the valves begin to open early check for the following possible cause.
a. Retarded ignition timing (see Section U6).
8. If the E.G.R. valves do not function correctly after carrying out Operations 1 to 7 inclusive, replace the offending valve(s) with new units.
9. Carry out Operations 1 to 7 inclusive.

E.G.R. feed pipe (see Fig. U5)
The E.G.R. feed pipe conveys exhaust gas that is to be recirculated from the exhaust balance pipe to the exhaust gas recirculation valves.

E.G.R. feed pipe - To remove
1. Unscrew the two 7/16 in. A/F nuts from the clamp at the upper end of the feed pipe (see Fig. U11).
2. Collect the two washers and 'split' the clamp from the spherical joint.
3. Repeat Operations 1 and 2 on the lower joint adjacent to the exhaust system balance pipe. Collect the sealing ring.

E.G.R. feed pipe - To fit
Fit the E.G.R. feed pipe by reversing the procedure given for removal, noting the following.
1. Ensure that the joint faces are clean and free from carbon deposits.

E.G.R. valves heatshield - To remove (see Fig. U12)
1. Slacken the two forward ½ in. A/F nuts one on either side of the mounting flange.
2. Unscrew and remove the two 7/16 in. A/F set-screws retaining the heatshield to the rear of 'B' bank air horn, collect the washers.
3. Ease the assembly forward to release the heatshield slots from the retaining studs.
4. Withdraw the heatshield.

E.G.R. valves heatshield - To fit
Fit the heatshield by reversing the procedure given for removal.

Printed in England
© Rolls-Royce Motors Limited 1979
November 1979
TSD 4200
(Australia
1979 Model Year)

Section U3

Fuel evaporative emission control system

The Fuel Evaporative Emission Control System eliminates direct venting of the fuel system, thus preventing the release of unburnt hydrocarbons into the atmosphere.

Vepour from the fuel system is collected and stored in a charcoal filled canister. The canister is purged whenever the engine is running and the stored fuel vapour is extracted from the charcoal and burnt in the engine.

The system is illustrated in Figure U13 and comprises the following main components.

Canister (see Fig. U14)
Carbon granules (charcoal)
Float chamber connection
Fuel tank connection
Polyurethane air filter
Purge line connection
Weakening device connection

Fuel tank (see Fig. U16)
Combined pressure/vacuum relief valve
Expansion tank
Fuel trap assembly

Purge line (see Fig. U13)
Air filter
Restrictor

Weakening device (see Figs. U18 and U19)
Adjustable orifice
Air filter
Anti 'run-on' solenoid
Cut-off solenoid
Cut-out switch
Float chamber drain valve
Float chamber vent valve
Fuel receiver chamber
Non-return valves
Venturi chamber

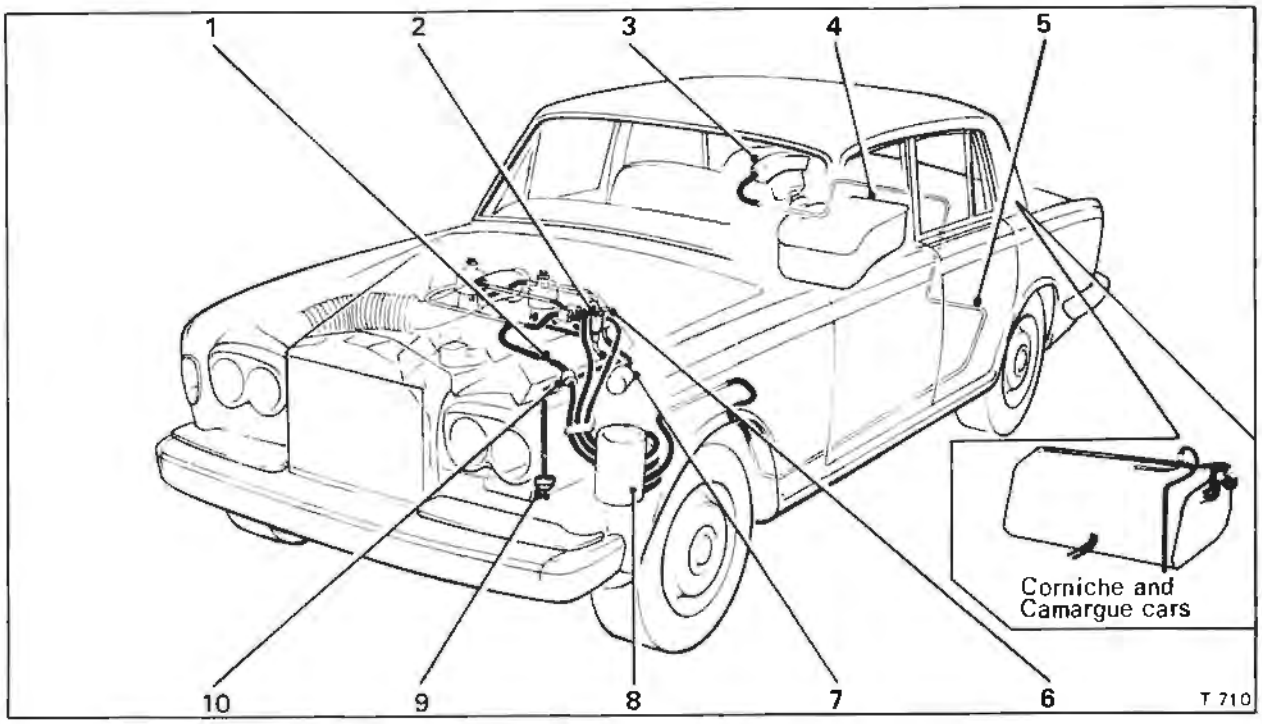

Fig. U13 Fuel evaporative emission control system

1 Purge line restrictor
2 Float chamber vent valve
3 Fuel trap assembly
4 Fuel tank
5 Fuel vapour line
6 Weakening device
7 Weakening device filter
8 Evaporative loss control canister
9 Float chamber drain valve
10 Purge line filter

Printed in England
© Rolls-Royce Motors Limited 1979
January 1979
TSD 4200
(Australia
1979 Model Year)

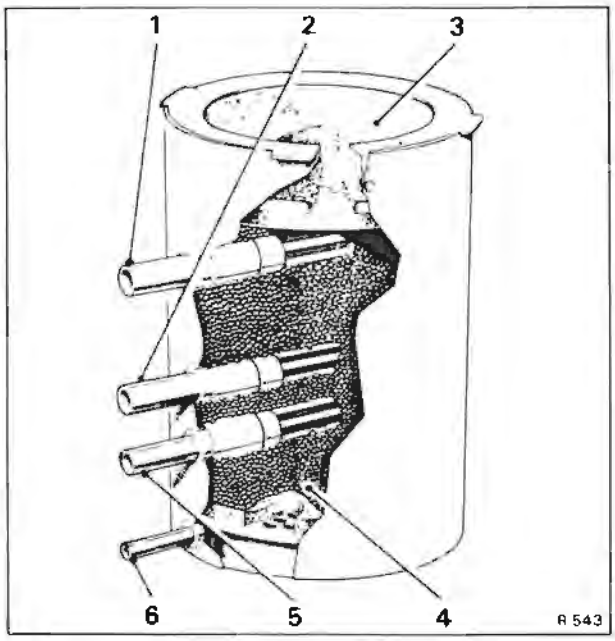

Fig. U14 Control canister
1 Weakening device connection
2 Float chamber vent connection
3 Polyurethane filter
4 Carbon
5 Fuel tank vent connection
6 Purge line connection

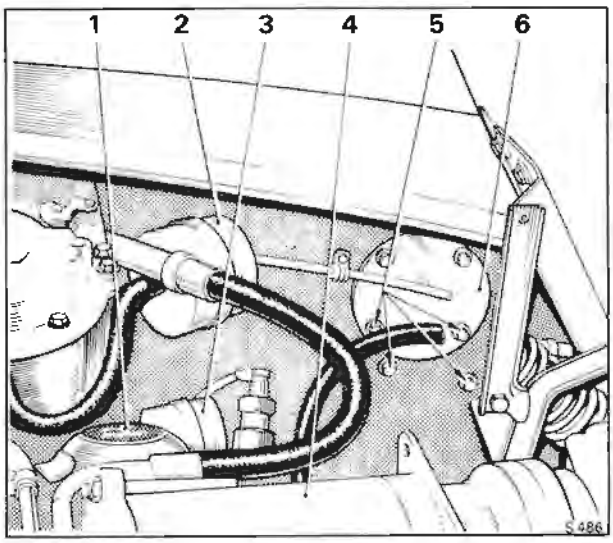

Fig. U15 Foam filter access cover, purge line filter and weakening device filter
1 Engine oil filler cap
2 Weakening device filter
3 Purge line filter
4 Refrigeration compressor
5 Canister securing setscrews
6 Foam filter access cover

For details of the servicing and maintenance requirements of the Fuel Evaporative Emission Control System, refer to the Service Schedules Manual - T.S.D. 4117.

Control canister (see Figs. U13 and U14)
The evaporative emission control canister is situated under the left-hand front wing. It is a cylindrical container filled with activated carbon granules which absorb and retain fuel vapour. There are connections for the mixture weakening device vent, the fuel receiver vent, the fuel tank vent and the purge line. The top of the canister is open to atmosphere and contains a Polyurethane foam filter element.

When the engine is running air is drawn from the atmosphere through the foam filter element and carbon granules to the lowest connection on the canister. The air, containing fuel vapour from the carbon granules then passes into the engine via the purge line.

Control canister - To remove
1. Remove the front left-hand road wheel as described in Chapter R.
Note
Left-hand is determined when viewed from the driver's seat.
2. Remove the front section of the underwing sheet by unscrewing the small screws situated around the outer edge of the sheet. Resistance may be experienced when the sheet is being freed, as it is sealed around the edge with a suitable compound (i.e. Bostik Seelastik).
3. The canister will be clearly visible towards the front of the vehicle.
4. Using the special pliers (RH 8090), remove the steel retaining clips from the four hose connections to the canister. Label the hoses to facilitate identification and withdraw the four hoses from the canister.
5. Raise the bonnet and from inside the engine compartment locate the canister foam filter access cover (see Fig. U15).
6. Unscrew and remove the four setscrews indicated as securing setscrews in Figure U15. Before removing the final setscrew support the control canister.
7. Withdraw the canister from beneath the wing.

Control canister - To fit
Fit the canister by reversing the procedure described for removal, noting the following points.
1. Ensure that the rubber hoses are in a good condition and new hose retaining clips are fitted.
2. Ensure that the underwing sheet is sealed with a suitable compound (i.e. Bostik Seelastik).

Polyurethane foam filter element - To renew
It is not necessary to remove the canister from the car in order to extract the polyurethane foam filter element. A detachable cover is situated in the left-hand valance (see Fig. U15).

1. Unscrew the four screws retaining the access cover, lift off the cover and withdraw the filter element from the top of the canister.

When fitting a new element, ensure that it is correctly positioned inside the retaining rim of the canister. Fit the access cover and tighten the setscrews.

Fuel tank (see Fig. U16)
On Silver Shadow II, Silver Wraith II and Bentley T2 cars the fuel tank is vented from three positions to the fuel trap assembly which is mounted above the fuel filler. One vent is from the fuel filler neck and the others are from the fuel tank.

The three vent lines join at a common junction block situated adjacent to the fuel filler neck, the main vent line then passes to the fuel trap assembly.

From the fuel trap a vent line passes under the floor of the car to the evaporative loss control canister.

The fuel trap assembly acts as a liquid separator and prevents liquid fuel from being transferred to the evaporative loss control canister under severe driving manoeuvres, when the fuel tank is full or during expansion of the fuel at high ambient temperatures.

A combined relief and vacuum valve fitted into the end of the fuel trap assembly prevents an excessive pressure 'build up' in the fuel tank due to vapourisation or depression (as fuel is consumed), in the event of a blockage in the vent line to the evaporative loss control canister.

Included in the main fuel tank is a small expansion tank (see Fig. U16) of 3,125 litres (5.5 Imp.pt. - 6.7 U.S. pints) capacity. The expansion tank inhibits complete filling of the main fuel tank and provides additional fuel expansion volume to contend with extreme temperature conditions.

When the car is being filled with fuel, the main fuel tank (without an expansion tank) could normally be completely filled, leaving only the filler neck,

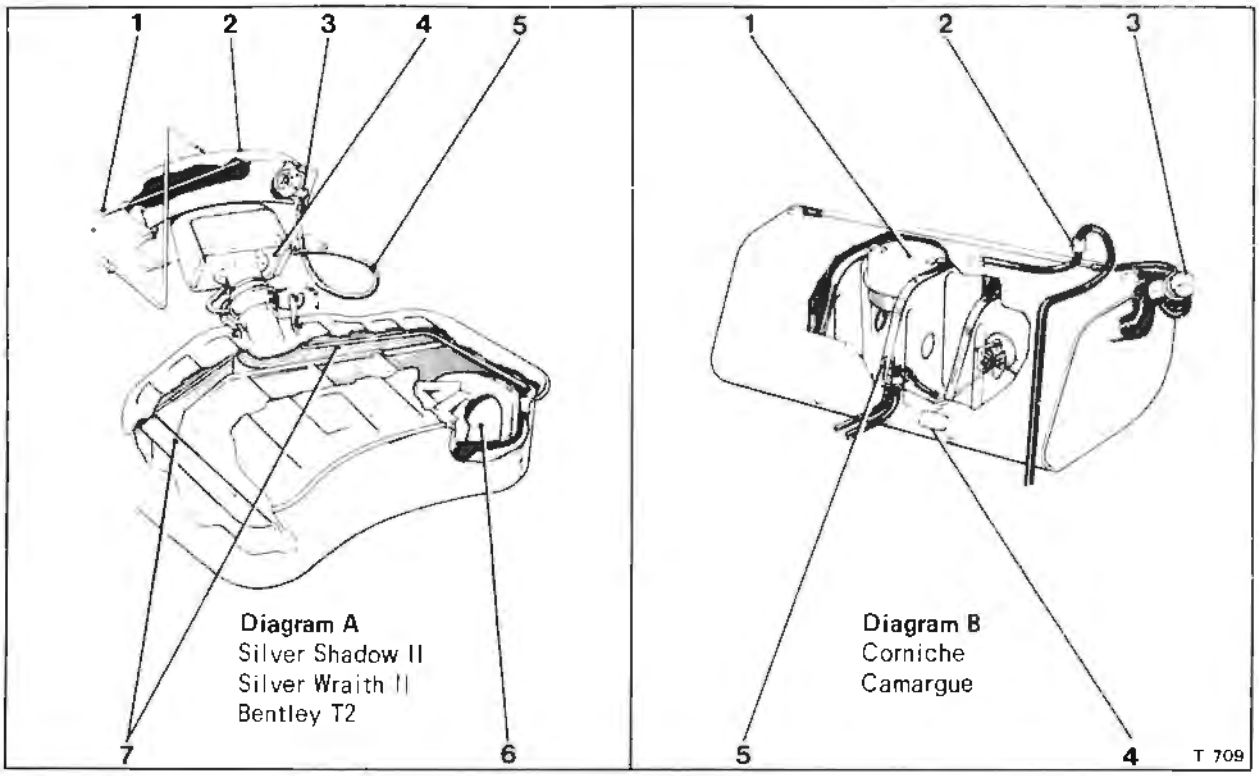

Fig. U16 Fuel evaporative emission control system - fuel tank assembly

1 Fuel vapour line
2 Fuel trap assembly
3 Combined relief and vacuum valve
4 Fuel filler box
5 Relief valve vent
6 Expansion tank and overfill limiter
7 Vent pipes

1 Expansion tank and overfill limiter
2 Rollover valve
3 Fuel filler cap (incorporating combined relief and vacuum valve)
4 Fuel tank float
5 Nylon 'in tank' filter

Printed in England
© Rolls-Royce Motors Limited 1979

vent connector pipes and fuel trap assembly to accommodate the expansion of the fuel. An expansion tank is therefore situated in the upper part of the main fuel tank and as the fuel level rises above the lower part of the assembly it flows inside through two small holes in the base. Two additional holes in the top of the expansion tank allow air to escape.

On Corniche and Camargue cars the fuel tank is vented via two connections to the filler neck allowing adequate venting of the tank during filling. A separate vapour line passes via a rollover valve from the tank, under the floor on the left-hand side of the car, to the evaporative loss control canister. The rollover valve prevents liquid fuel from entering the evaporative emission control canister during harsh manoeuvres or in the event of vehicle rollover. Fuel vapours pass freely through the valve. The fuel tank is illustrated in Figure U16.

In the event of a blockage in the vapour line to the evaporative loss control canister, a combined pressure and vacuum relief valve in the fuel filler cap prevents an excessive pressure 'build up' in the fuel tank due to fuel vapourisation or depression, as the fuel is consumed.

An expansion tank situated within the main fuel tank inhibits complete filling and provides fuel expansion volume to cope with extreme temperature conditions.

For all other details of the fuel tanks refer to Chapter K

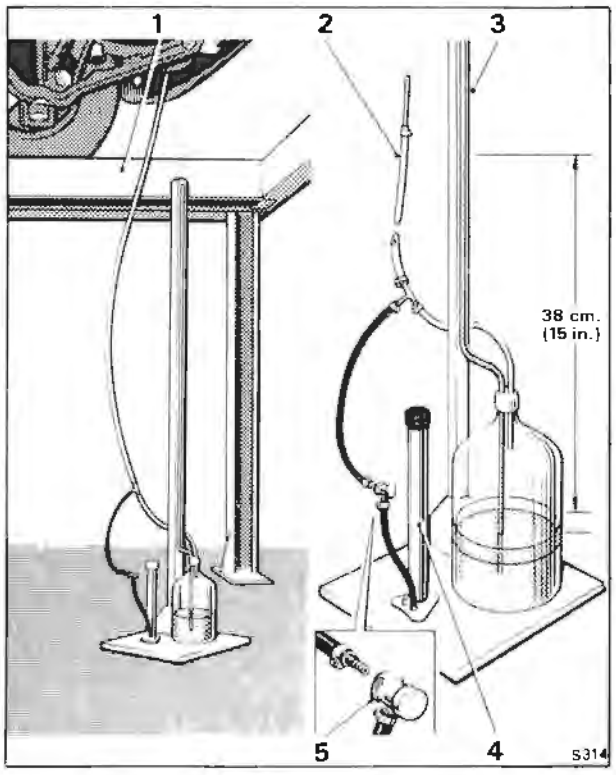

Fig. U17 Leak check test equipment

1 Ramp
2 Connection to fuel tank/canister hose
3 Test equipment
4 Pump
5 One-way pressure valve

Fuel evaporative emission control system - To leak check

Whenever the various pipes, hoses and components of the fuel evaporative emission control system are disturbed, the system should be checked for air leaks upon assembly.

To test the system proceed as follows.

1. Position the vehicle on a ramp and carry out the usual safety precautions (i.e. ensure that the gear range selector lever is in 'Park' position, the parking brake firmly applied, the engine switched off, etc.,). Raise the ramp.
2. Remove the left-hand horn assembly (left-hand is decided when standing under the vehicle, looking towards the front), see Chapter M.
3. Through the resultant gap between the front wing and wing sheet, locate the emission control canister and identify the hose connection from the fuel tank (second from the bottom).
4. Using the special pliers (RH 8090), remove the steel retaining clip from the fuel tank connection hose at the control canister.
5. The fuel tank hose should be detached from the canister and connected to the test equipment (see Fig. U17).
6. Apply air pressure to the fuel tank hose via the test equipment until a reading of 38 cm. (15 in.) H_2O is attained and close the pressure supply.
7. After 5 minutes again check the pressure reading, this should not have fallen by more than 12,7 mm. (0.5 in.).
8. If the pressure drop is more than 12,7 mm. (0.5 in.), progressively treat all joints in the system with soap solution to detect air leaks.
9. Rectify any air leaks and again leak check the system.
10. When the system is satisfactory, detach the test equipment and connect the hose to the control canister, secure with a new steel retaining clip.
11. Fit the left-hand horn assembly as described in Chapter M.

Purge line

The purge line consists of a rubber hose, passing from the lowest connection on the canister through the valance junction piece to the induction manifold connection on the opposite side of the engine (see Fig. U13). Incorporated into this hose is the purge line filter and restrictor.

When the engine is running, air drawn through the canister filter and carbon picks up the stored fuel vapours and passes them via the hoses, to the

induction system at a point just below the choke housing. The restrictor in the line controls the flow rate at between 1,41cu.m. per/hr. and 1,98 cu.m. per/hr. (50 cu.ft. per/hr. and 70 cu.ft. per/hr.) to maintain carburetter metering accuracy and the paper element line filter is fitted to prevent blockage of the restrictor.

Purge line filter

The purge line filter is situated on the left-hand valance just forward of the front road spring pot (see Fig. U15). The air filter assembly is a sealed unit and no attempt should be made to clean the element.

At the mileage intervals specified in the Service Schedules the purge line filter should be removed and a new assembly fitted as follows.

Purge line filter - To remove

1. Using the special pliers (RH 8090) remove the two steel retaining clips situated one on either side of the filter assembly.
2. Detach the inlet and outlet hoses.
3. Slacken the small setscrew that secures the clamp bracket around the filter assembly.
4. Swivel the clamp bracket to enable the filter assembly to be withdrawn.

Purge line filter - To fit

Fit the purge line filter by reversing the procedure given for removal, noting the following points.

1. Ensure that the filter assembly is fitted the correct way around; the word 'IN' moulded into the end of the casing should be towards the front of the vehicle.
2. Ensure that the rubber hoses are in a good condition and that new hose retaining clips are used.

Purge line restrictor

The purge line restrictor is situated in the purge line between the air filter and the induction manifold connection (see Fig. U13). The function of the restrictor is to maintain the air flow through the purge line within predetermined limits.

Purge line restrictor - To remove

1. Hold the restrictor firmly and slide the rubber hosing from both ends.

Purge line restrictor - To fit

Fit the restrictor by reversing the procedure given for removal, noting the following point.

1. Ensure that the purge line restrictor is fitted into the line correctly. This can be determined by comparing the diameters of the restrictor ends with those of the rubber hoses.

Purge flow rate - To check

1. Disconnect the hose from the engine side of the purge line filter and insert a flowmeter assembly (RH 8725) into the line between the filter and the restrictor. The flowmeter is a rotameter type capable of measuring between 1,4 cu.m/hr. and 2,0 cu.m/hr. (50 cu.ft/hr. and 70 cu.ft/hr.). The pressure drop across the meter must not exceed 5,08 cm. Hg. (2.0 in.Hg.).
2. Start and run the engine at 650 r.p.m.; the reading on the flowmeter should be between 1,41 cu.m/hr. and 1,99 cu.m/hr. (50 cu.ft/hr. and 70 cu.ft/hr.).
3. If the flow is less than the minimum figure quoted in Operation 2, stop the engine and substitute the purge line restrictor with a straight piece of metal pipe having an internal diameter larger than 4,76 mm. (0.187 in.).
4. Start and run the engine at 650 r.p.m.; the reading on the flowmeter should be in excess of 1,99 cu.m/hr. (70 cu.ft/hr.).

5a. If the flowmeter reading is above 1,99 cu.m/hr. (70 cu.ft/hr.) fit a new purge line restrictor and repeat Operation 2.

b. If the flowmeter reading is below 1,99 cu.m/hr. (70 cu.ft/hr.) the cause could be as follows.

(i) An air leak in any of the vacuum hoses that connect to the induction manifold connection (vacuum manifold).

(ii) A blockage in the vacuum manifold or any of the connecting hoses.

Any leaks or blockages should be rectified; the restrictor should be fitted and Operation 2 repeated. If the flow rate is still incorrect fit a new restrictor and again, repeat Operation 2.

6. Remove the test equipment and connect the hose to the purge line filter.

Weakening device

The mixture weakening device (see Fig. U18) is fitted adjacent to 'B' bank carburetter and incorporates a fuel receiver.

For any given position of the fuel metering needle, the rate of the discharge from the carburetters is governed by the difference in air pressure existing over the fuel in the float chamber and that over the jet.

The weakening device is designed to reduce the air pressure (create a depression) in the float chamber at part throttle, thereby reducing the rate of discharge from the jet.

The weakening device housing contains two chambers (see Fig. U19), the venturi chamber and the fuel receiver chamber, the two being interconnected by a passage and an adjustable venturi.

The venturi chamber is connected to a small drilling on the edge of the butterfly plates of both carburetters via the weakening device solenoid valve, with the throttle slightly open the drillings are subjected to manifold depression thus creating a depression in the venturi chamber which draws air from the weakening device air filter. This

Printed in England
© Rolls-Royce Motors Limited 1979
January 1979
TSD 4200
(Australia
1979 Model Year)

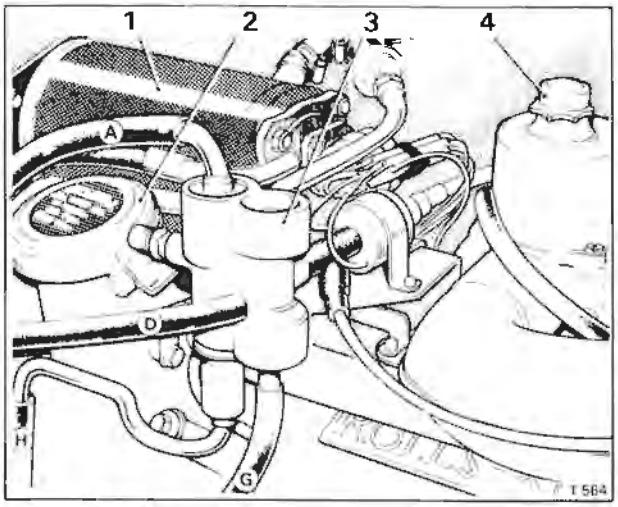

Fig. U18 Position of mixture weakening device
1 Refrigeration compressor
2 Engine oil filler
3 Mixture weakening device
4 'B' bank carburetter

depression is also apparent in the fuel receiver chamber and subsequently in the carburetter float chambers.

The value of the depression is set by the position of the weakening device adjusting screw.

To obtain adequate float chamber venting to cope with hot soak conditions there is an additional vent from the fuel receiver. This incorporates a low pressure non-return valve to maintain float chamber depression under normal running conditions. In addition to this valve, a one-way valve is fitted into the venturi chamber to prevent any evaporating fuel being discharged to atmosphere.

A float chamber drain, also incorporating a low pressure non-return valve is mounted at the front of the engine adjacent to the oil filter, this valve is connected to the fuel receiver. Should flooding occur the head of fuel in the receiver is sufficient to open the drain valve thus preventing engine stalling if the float chamber needle valves stick.

Weakening device - To remove
1. Label all hoses connected to the weakening device assembly, this will facilitate assembly.
2. Disconnect all hoses to the weakening device.
3. Unscrew and remove the two small setscrews that retain the weakening device to the solenoid platform; the two screws are situated just below the pipe/hose connections for the anti 'run-on' solenoid and weakening device cut-off solenoid.
4. Withdraw the weakening device.

Weakening device - To fit
Fit the weakening device by reversing the procedure given for removal, noting the following point.
1. Ensure that all hoses connecting to the assembly are in a good condition and that all connections are 'air tight'

Weakening device - To dismantle (see Fig. U19)
1. Remove the weakening device from the vehicle.
2. Remove the small screw that secures the fuel receiver assembly into the base of the weakening device, withdraw the assembly.
3. Unscrew the weakening device signal cap, collect the cap fibre washer. Unscrew the signal line adapter from the casting and withdraw the aluminium washer from the adapter.
4. Remove the circlip from the top of the fuel receiver chamber, withdraw the float chamber vent pipe (slight resistance may be felt due to the rubber sealing ring). With a soft drift (e.g. wooden pencil), push the float chamber vent valve out of the weakening device assembly (the drift is required because the rubber sealing ring fitted around the vent valve will cause a small resistance).
5. Remove the circlip from the base of the venturi chamber, withdraw the **air intake pipe** containing a one-way valve (slight resistance may be felt due to the rubber sealing ring).
6. Remove the **anti-tamper cover** from the top of the venturi chamber, unscrew the lock-nut and using a screwdriver unscrew the **adjusting screw**.

Weakening device - To assemble
To assemble the weakening device, reverse the procedure given for removal, noting the following.
1. Ensure that all components are clean before assembly.
2. Ensure that the rubber sealing rings are in a good condition and lightly smeared with the minimum amount of grease. Ensure that no grease is applied to the valves otherwise a malfunction may occur due to the grease making the valves stick.
3. After assembly, the operator should check that he can blow but not suck on the metal pipes, one on top of the fuel receiver chamber and the other at the bottom of the venturi chamber.

Weakening device signal strength - To check
The **float chamber depression** should be checked as follows.
1. Start and run the engine until normal setting conditions are attained (i.e. engine cooling system thermostat opened, air conditioning unit switched off and the automatic choke is off).
2. Stop the engine.
3. Connect an electric impulse tachometer to the engine in accordance with the manufacturer's instructions.
4. Isolate the E.G.R. valves from the weakening system by disconnecting the E.G.R. signal pipe from the 'Y' piece located between the weakening system

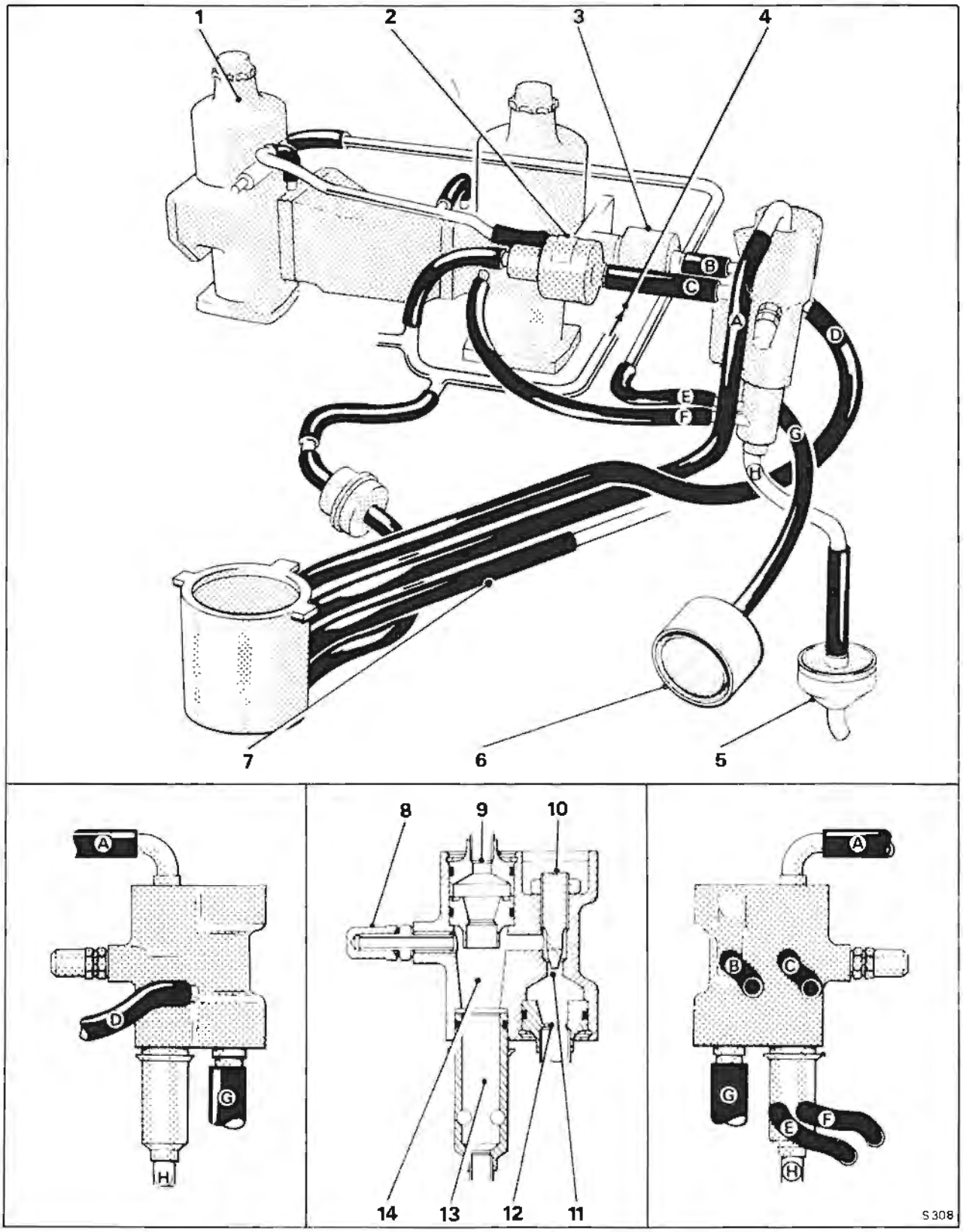

Fig. U19 Mixture weakening device

1 'A' bank carburetter
2 Anti 'run-on' solenoid
3 Weakening device cut-off solenoid
4 Induction manifold connection
5 Float chamber drain valve
6 Weakening system air filter
7 Vent from fuel tank
8 Weakening device signal cap
9 Float chamber vent valve
10 Adjusting screw
11 Venturi chamber
12 Air intake valve
13 Fuel receiver
14 Fuel receiver chamber

Printed in England
© Rolls-Royce Motors Limited 1979

cut-off solenoid and the weakening device. Blank off the 'Y' piece connection.
5. Unscrew and remove the weakening device signal cap and connect a 0 to 15,5 cm. (0 to 6 in.) water manometer to the weakening device adapter.
6. Start and run the engine at 2 000 r.p.m. in 'Park' until a steady manometer reading is obtained, this should be 5,08 cm. (2.0 in.) of water depression.
A low or zero reading may be caused by
a. A blockage in the weakening device venturi to the weakening device cut-off solenoid.
b. A blockage or restriction in the signal pipe(s).
c. An air leak in the hoses or pipes from the float chambers to the emission control canister.
d. Faulty float chamber vent valve or drain valve.
e. Low engine air intake temperature [below 14° C. (57° F.)].
f. Faulty weakening device solenoid or weakening device switch.
A high reading may be caused by
a. An obstruction in the weakening device bleed orifice (weakening device signal strength adjusting screw).
b. Obstructed weakening device air filter or evaporative loss control canister.
c. Incorrect connection or blockage in the weakening device to either the valance connection or the evaporative loss control canister.
d. Weakening device air intake valve sticking closed.
e. Obstructed weakening device air filter hose.
f. Incorrect operation of anti 'run-on' solenoid.
7. If the float chamber depression is still incorrect after checking through the possible causes in Operation 6, set the weakening device signal strength (float chamber depression) by unlocking and turning the adjusting screw (see Fig. U19) until the correct manometer reading is obtained. Turning the adjusting screw clockwise increases the depression.
8. Remove the blank from the E.G.R. and weakening system 'Y' piece and connect the E.G.R. pipe.
9. Raise the engine speed slowly noting both the manometer and tachometer readings. The maximum steady manometer reading should be obtained between 1 200 r.p.m. and 1 500 r.p.m.
10. Allow the engine speed to return to the idle setting (650 r.p.m.) and check the float chamber depression reading on the manometer.
If the float chamber depression at idle speed is above 10,16 mm. H_2O (0.4 in.H_2O) check the ignition timing at idle as this condition may result in unsatisfactory driveability.
11. Fit the tamperproof cover into the top of the venturi chamber.

Weakening device air filter - To remove
The air filter container is mounted on the left-hand valance just forward of the road spring pot (see Fig. U15).

This is a sealed unit and no attempt should be made to clean the element.
1. To remove the air filter assembly, detach the hose and unscrew the worm drive clip situated around the assembly.
2. Withdraw the assembly.

Weakening device air filter - To fit
Fit the air filter container by reversing the procedure given for removal.

Section U4

Crankcase emission control system

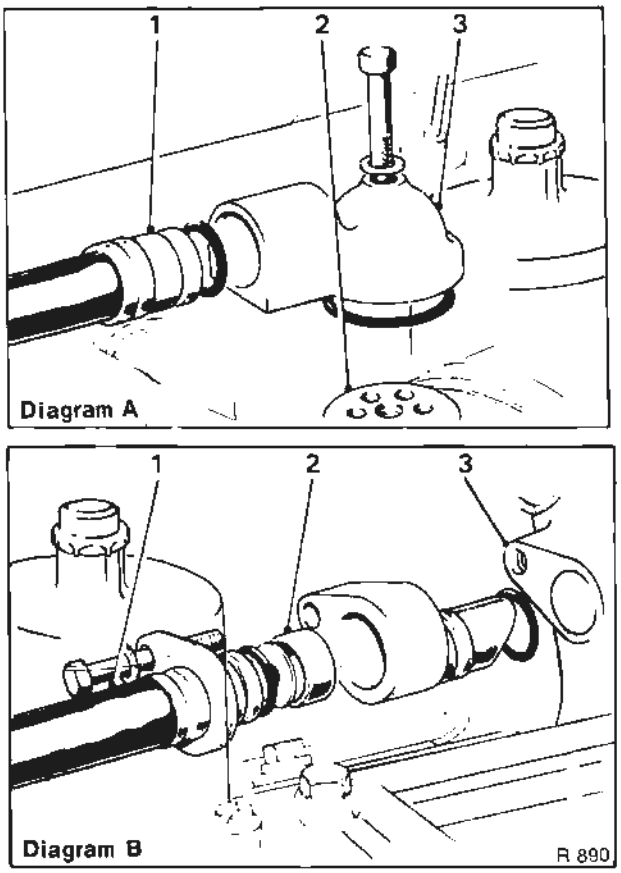

Fig. U20 Crankcase breather pipe connections

Diagram A		Diagram B	
1	Breather tube	1	Breather tube
2	Choke housing	2	Flame trap
3	Breather connection	3	Oil filler housing

Crankcase emissions are controlled by a recirculatory closed breather system.

An insulated draught tube connects the crankcase via the oil filler which is fitted with a sealed cap, to the choke housing upstream of both the choke butterfly and the carburetters. A flame trap capsule containing three wire mesh discs is fitted in a housing at the crankcase end of the draught tube. Engine emission (blow-by) is drawn into the induction system via the draught tube, due to the depression in the choke housing.

1. The flame trap fitted to the breather pipe should be cleaned in the following manner, at the specified mileage.

2. Unscrew the setscrew securing the breather pipe connection to the oil filler pedestal; withdraw the connection from the pedestal (slight resistance may be felt due to the rubber 'O' ring connections).

3. Withdraw the connection from the pipe flange and collect the restrictor.

4. Wash the flame trap assembly in clean fuel, then dry with compressed air from an high pressure air line. The flame trap assembly consists of 3 gauzes crimped together as shown in Figure U20.

5. To clean the adapter fitted to the choke housing, remove the single setscrew from the breather pipe end connection and detach the pipe.

6. Clean the adapter fitted to the choke housing and ensure that the holes in the adapter are clear.

7. Assembly of the flame trap and breather pipe is in the reverse order, ensuring that the 'O' rings are in good condition.

Printed in England
© Rolls-Royce Motors Limited 1979
January 1979
TSD 4200
(Australia
1979 Model Year)

Printed in England

© Rolls-Royce Motors Limited 1979

January 1979

TSD 4200
(Australia
1979 Model Year)

Section U5

Carburetters and Automatic choke system

The Carburetter and Automatic Choke System can be seen illustrated in Figure U21 and comprises the following main components.

Automatic choke
Fast-idle
Stove pipe
(For the remainder of the Automatic Choke System refer to Chapter K).

Carburetters (see Fig. U23)
Bi-metal jet lever
Carburetter fuel filter
Carburetter idle airflow balance
Float
Float chamber
Float needle
Jet assembly
Jet needle
Overrun valve
Piston
Piston damper
Piston damper retainer (Piston ball race clip)
Suction chamber
Tamperproof caps

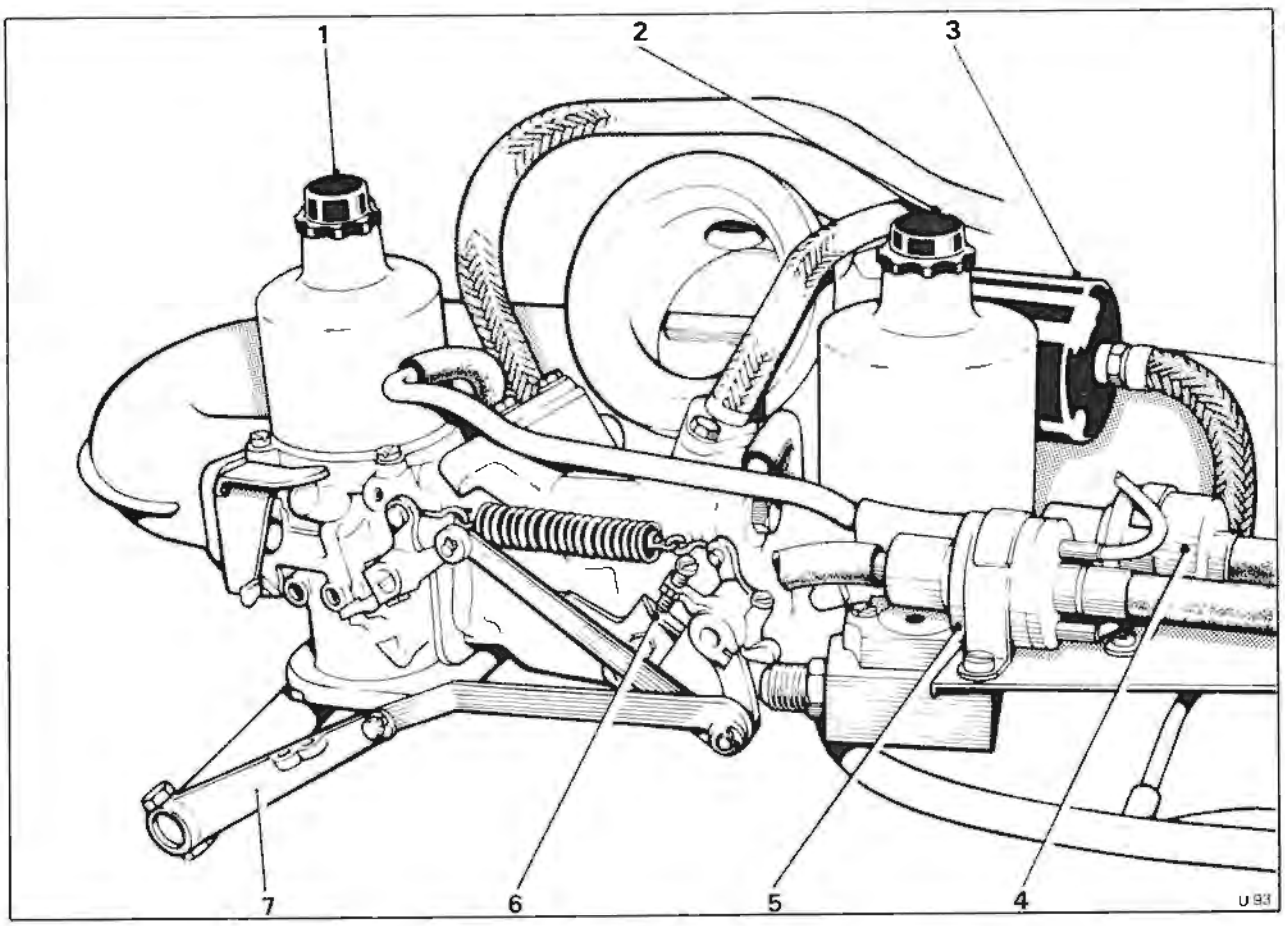

Fig. U21 Carburetters and linkage
1 'A' bank carburetter
2 'B' bank carburetter
3 Choke bi-metal housing
4 Weakening and E.G.R. cut-off solenoid
5 Anti 'run-on' solenoid
6 Idle speed adjusting screw
7 Front manifold shaft lever

Throttle disc
Throttle linkage
Viscosity compensator

Temperature controlled air intake
Air cleaner/silencer
Air blend valve
Cold air intake
Hot air scoop
Manifold vacuum hose
Resonator
Temperature sensor

Weakening device
(Refer to Section U3).

Automatic choke
All details for the Automatic Choke System are given in Chapter K, except for the checking and setting procedures of the following.

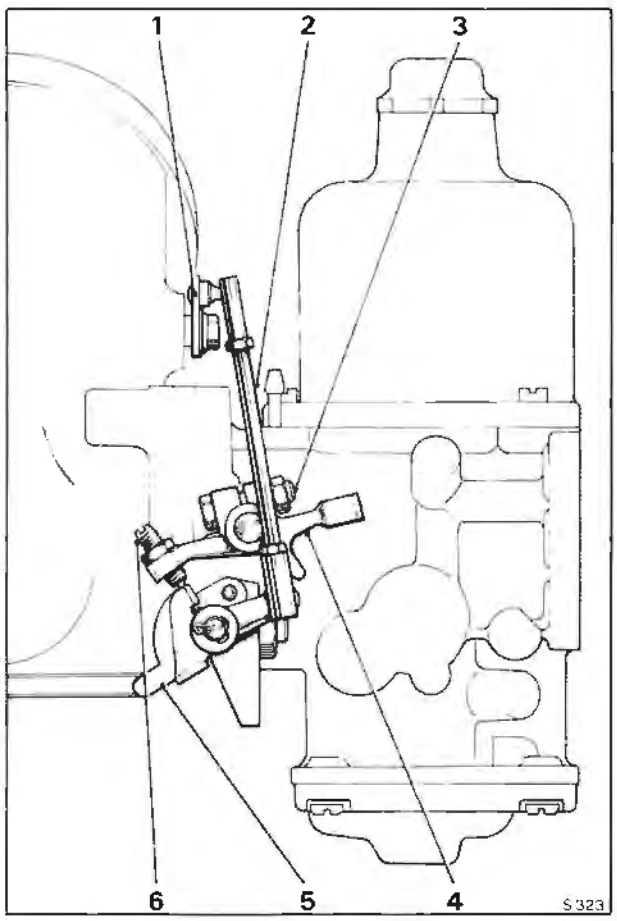

Fig. U22 Fast-idle mechanism
1 Control rod lever
2 Butterfly rod
3 Lever clamp bolt
4 Fast-idle lever
5 Cam
6 Adjusting screw

Fast-idle To set
1. Ensure that the usual safety precautions are carried out (i.e. parking brake firmly applied, gear range selector lever in 'Park' etc.) and connect an impulse tachometer in accordance with the manufacturer's instructions.
2. Disconnect the E.G.R. vacuum signal at the pipe from the solenoid 'Y' piece to the E.G.R. valves and blank the 'Y' piece connection.
3. Start and run the engine until normal operating temperature is attained. Stop the engine and remove the pressure tapping cap from the weakening device (see Fig. U19).
4. Open the throttles and close the choke butterfly against the bi-metal tension using control rod lever (item 1 - Fig. U22) until the adjusting screw (item 6 - Fig. U22) is resting on the tip of the fast-idle cam. At this point an extra load will be felt due to the action of the extended fast-idle plunger ceasing.
5. Start the engine, if the speed is outside a range of 850 r.p.m. to 900 r.p.m. stop the engine, open the throttles to gain access to the adjusting screw and turn the screw approximately ⅛ turn for each 20 r.p.m. required. Tighten the lock-nut
6. Start the engine and again check the fast-idle speed.
7. When the engine speed has been adjusted to within the prescribed limits open the throttles to release the fast-idle mechanism.
8. Stop the engine, disconnect the tachometer, remove the blank from the 'Y' piece connection at the cut-off solenoid and fit the E.G.R. signal pipe to the 'Y' piece connection. Fit the pressure tapping cap to the weakening device.

Choke stove pipe - To flow check
1. Ensure that the usual safety precautions are carried out (i.e. parking brake firmly applied, gear range selector lever in 'Park' etc.) and connect an impulse tachometer in accordance with the manufacturer's instructions.
2. Start and run the engine until normal operating temperature is attained. Stop the engine.
3. Disconnect the stove pipe union at the intake elbow (see Fig. U36) and connect a flowmeter to the pipe via a connector (RH 8945). The flowmeter must be a rotameter type capable of measuring 2,9 cu.m./hr. (100 cu.ft./hr.).
4. Start and run the engine at idle speed (650 r.p.m.); observe the flowmeter, a correct reading is between 1,41 cu.m/hr. and 1,55 cu.m/hr. (50 cu.ft/hr. and 55 cu.ft/hr.).
5. If the flow is less than 1,41 cu.m./hr. (50 cu.ft/hr.) check the choke stove pipe unions for leaks.
6. If the flow is in excess of 1,55 cu.m/hr.

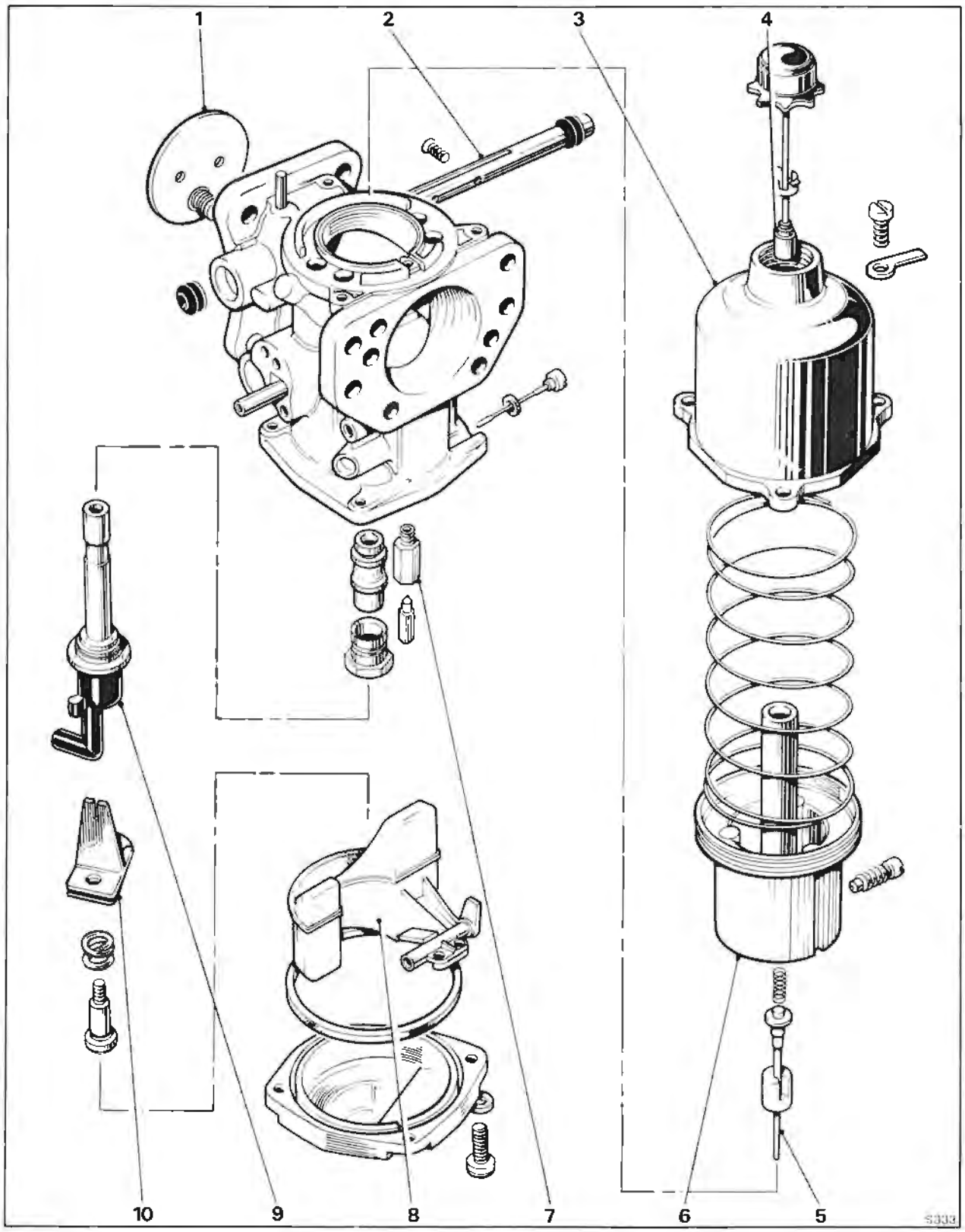

Fig. U23 SU HIF7 carburetter

1 Throttle disc with overrun valve
2 Throttle spindle
3 Suction chamber
4 Piston damper
5 Jet needle
6 Piston
7 Float needle valve assembly
8 Float
9 Jet assembly
10 Bi-metal jet lever

Printed in England
© Rolls-Royce Motors Limited 1979
January 1979
TSD 4230
(Australia
1979 Model Year)

(55 cu.ft/hr.), fit a new restrictor in the choke bi-metal housing (see Chapter K).

Carburetters

Two S.U. HIF7 (Horizontal Integral Float Chamber) carburetters with 4,76 cm. (1.875 in.) choke bores (see Fig. U23) are fitted to the engine on a central 'tee' piece which is mounted over an eight branch induction manifold.

This type of carburetter automatically adjusts both its choke and jet area to meet the demand of the engine which is dependent on engine speed and loading. As air is drawn through the carburetter, the piston acting as an obstruction will cause a depression to be formed in the area between the throttle and the piston. This depression is communicated by means of transfer holes in the base of the piston to the area above the piston, causing an upward force to be imposed on the piston. The piston will rise in response to this force relieving the depression in the area between the piston and the throttle as it does so until a point is reached where the force acting on the piston is balanced by the weight of the piston and the load exerted by the piston spring.

A spring-loaded jet needle is fitted to the carburetters, which is biased downstream and operates in a 2,54 mm. (0.10 in.) diameter main jet; this jet does not require centralising.

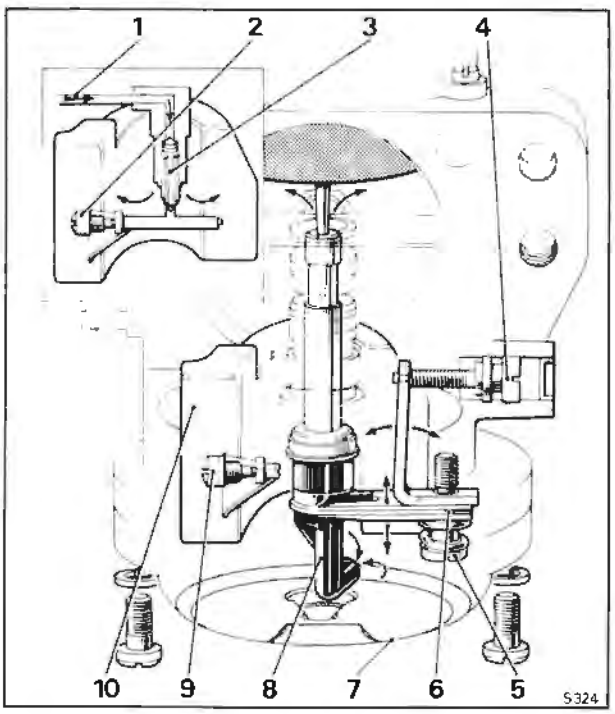

Fig. U24 Float chamber layout

1 Fuel inlet
2 Float fulcrum screw
3 Needle valve
4 Jet adjusting screw
5 Bi-metal pivot screw
6 Bi-metal assembly
7 Bottom cover-plate
8 Jet head
9 Float fulcrum screw
10 Concentric float

Float chamber (see Fig. U24)

The float chamber is incorporated in the main body casting; access to the chamber is obtained by removing the bottom cover-plate (item 7). The moulded float (item 10) is shaped so that it surrounds the jet tube and is pivoted along a line parallel to the inlet flange. The float is retained by a spindle (items 2 and 9) which screws into the body casting.

Entry of the fuel into the float chamber is via a brass tube (item 1) in the side of the carburetter body to a needle valve assembly (item 3).

The jet is pressed into the top of an aluminium tube which is in turn pressed into a plastic moulding (item 8). This hollow moulding known as the jet head is open at its lower end allowing fuel to enter the jet tube.

Mixture adjustment (see Fig. U24)

The jet tube of the HIF type carburetter is moved in the vertical plane to provide mixture adjustment.

The jet adjustment assembly is comprised of a right-angled adjusting lever of unequal length arms riveted to a bi-metal blade (item 6).

The blade is cut out to accept the jet head (item 8) and the shape of the jet head is formed so that any movement of the bi-metal blade is transmitted to the jet head, moving it in the vertical plane.

The right-angled adjusting lever and bi-metal blade (item 6) are attached to the body casting by a spring-loaded retaining screw (item 5) positioned in the short arm of the lever. This attachment allows the adjusting lever to be pivoted at the outer edge of its short arm and is loaded by the spring towards the jet adjusting screw (item 4).

The jet adjusting screw is located at the outer end of the long arm of the adjusting lever; screwing the adjusting screw inward will lower the jet, enriching the mixture and unscrewing the adjusting screw will allow the spring to return the lever together with the jet, weakening the mixture.

After the mixture has been set the jet adjustment can be sealed by fitting a plug into the jet adjusting screw recess of the carburetter body.

HIF7 carburetters are set and balanced by accurate flow measuring techniques during manufacture and therefore, adjustment of the mixture screws should not be necessary.

Fuel temperature compensation (Viscosity compensator) (see Fig. U24)

This device alters the jet position in relation to the

metering needle to compensate for changes in fuel viscosity which take place with changes in fuel temperature.

When the fuel temperature rises, the viscosity is lowered, and in an uncompensated assembly this would allow more fuel to flow for a given jet/needle relationship.

In the HIF jet assembly the jet head is attached to a bi-metal blade (item 6). This bi-metal is immersed in the fuel in the float chamber and will move in the vertical plane in response to changes in fuel temperature. The jet will be raised to a weaker position on the jet needle when the fuel temperature rises and will be lowered to a richer position when the temperature falls.

From this it will be seen that once the jet position has been selected by adjusting the mixture screw, alterations of fuel temperature will bring about slight alterations in jet position to compensate for the change in fuel viscosity.

The effect of this device is that drivability is improved over wide ranges of temperature, and that exhaust emissions can be kept within closer limits during cold starting and the warm-up period. Temperature compensation also allows carburetters to have the mixture setting pre-set and sealed before the car is delivered.

Overrun valve (see Fig. U25)

During overrun (i.e. when decelerating with the throttles closed), insufficient mixture is supplied to the engine to maintain satisfactory combustion. The overrun valves alleviate this condition by allowing some mixture to pass through the throttle plates (butterflies) at high inlet manifold depressions.

An overrun valve is fitted into the throttle plate of each carburetter.

An overrun valve consists of a small disc retained in each throttle plate by a spring loaded plunger. Under normal conditions the disc is seated against the throttle plate. When the throttle is suddenly closed, the increased inlet manifold depression lifts the disc from its seating and allows a metered quantity of air/fuel mixture to pass through the throttle plate.

The action of the overrun valves maintains satisfactory combustion on overrun, thus reducing hydrocarbon emissions.

After the sudden closure of the throttles and as soon as the manifold depression falls, the overrun valve disc returns to its seat on the throttle plate.

Spring-loaded jet needle (see Fig. U26)

The jet needle fitted to each carburetter is biased towards a predetermined position in the jet orifice by means of a spring-loaded fixing.

The shoulder of the needle abuts a protrusion formed on the needle guide. Under the pressure of a spring the needle is held permanently in one position relative to the air flow. As the needle is retained in a predetermined position no jet centring is required and a non-centreable jet bearing is fitted. To ensure correct fitting the needle guide carries an etched alignment mark which should be

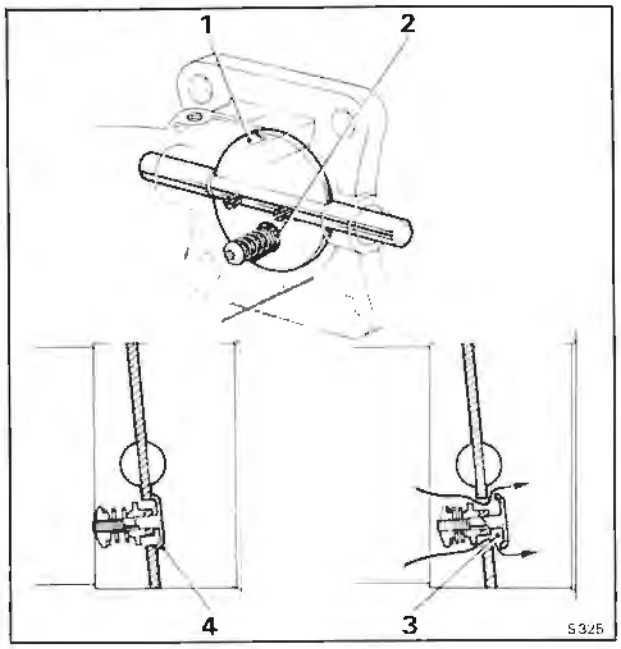

Fig. U25 Overrun valve
1 Throttle butterfly disc
2 Overrun valve
3 Overrun valve open
4 Overrun valve closed

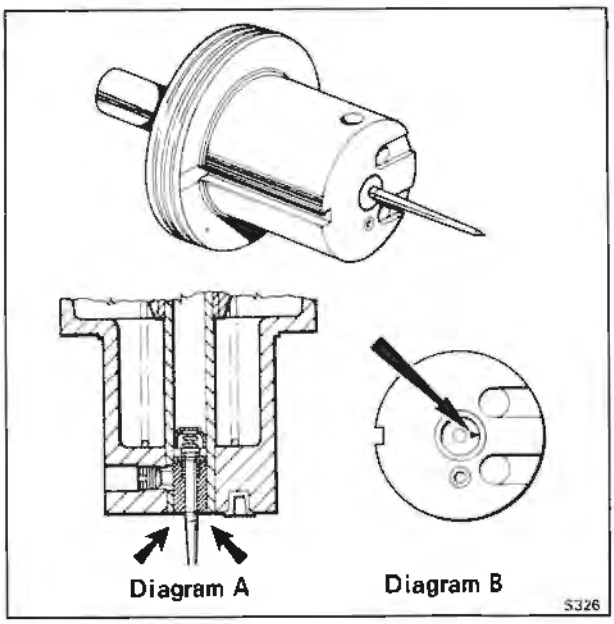

Fig. U26 Spring-loaded jet needle
Diagram A
Needle guide height setting
Diagram B
Needle guide alignment setting

Printed in England
© Rolls-Royce Motors Limited 1979

positioned mid-way between the two cut-outs in the piston.

Carburetter fuel filter
A filter element is fitted into the fuel filter housing attached to the side of each carburetter. At the intervals specified in the Service Schedules these two filter elements should be discarded and new ones fitted as described in Chapter K.

Carburetters and air horns assembly - To remove
Before commencing to remove the carburetters observe the following points.
1. When disconnecting the various hoses, pipes and wiring connections ensure that they are suitably labelled to assist identification when assembling.
2. Ensure that all open ends of pipes, hoses, etc. are suitably blanked off to prevent the ingress of dirt, etc.
3. Ensure that the usual safety precautions are carried out (i.e. parking brake firmly applied, gear range selector lever in 'Park', battery disconnected, etc.).

To remove the carburetter and air horn assembly proceed as follows
From 'A' bank side
1. Remove the air intake elbow casting (refer to Air intake - To remove in Chapter K).
2. Disconnect the fuel feed pipe fitted adjacent to 'A' bank carburetter.
3. Withdraw the electrical connections from the speed control bellows assembly. Disconnect the chain link from the throttle linkage to the speed control bellows assembly. Withdraw the vacuum hose from the speed control bellows assembly. Unscrew and remove the 'steady' bolt from the speed control bracket.
4. Remove the split pin, washer and clevis pin from the throttle linkage just forward of 'A' bank carburetter.
From 'B' bank side
5. Disconnect the E.G.R. feed pipe upper joint (refer to E.G.R. feed pipe - To remove, Section U2).
6. Unscrew the union on the choke stove pipe at the bi-metal housing.
7. Unscrew the fuel feed pipe union at 'B' bank carburetter filter housing.
8. Remove the crankcase emission control system pipe from the choke butterfly housing; withdraw the housing from the end of the pipe.
9. Disconnect the electrical cables to the choke solenoid at the 'snap connector' joints, adjacent to the butterfly housing.
10. Disconnect the electrical connections to the weakening and E.G.R. cut-off solenoid and to the anti 'run-on' solenoid.
11. Detach the following hoses from the weakening device.
a. the hose from the float chamber vent valve
b. the hose from the fuel receiver
c. the hose to the air filter
d. the hose from the venturi chamber
These hoses are labelled A, H, G and D in Figure U4.
12. Disconnect the purge line at the restrictor.
13. Unscrew the 7/16 in. A/F nut from the dipstick bracket; collect the washer.
14. Unscrew the ½ in. A/F setscrew from the centre of the carburetter 'tee' piece; withdraw the setscrew and washer.
15. Carefully withdraw the carburetters and air horn assembly, ensuring that no pipes, hoses or electrical items are still connected.

Carburetters and air horns assembly - To fit
Fit the carburetters by reversing the procedure given for their removal, noting the following points.
1. Ensure that all joint faces are clean.
2. Fit new gaskets.

Carburetters - To remove
Remove the carburetters and air horn assembly from the car (refer to Carburetters and air assembly - To remove) and then, remove the carburetters from the air horns assembly as follows.

'A' bank carburetter
1. Unscrew the two ½ in. A/F nuts securing the air horn to 'A' bank carburetter.
2. Withdraw the bolts and collect the washers.
3. Move the air horn flange upwards away from the carburetter.
4. Unscrew the union from the fuel filter.
5. Detach the vacuum supply hose from on top of the carburetter body adjacent to the carburetter and 'tee' piece flange.
6. Detach the hose from the side of the carburetter that connects to the fuel receiver in the weakening device
7. Completely remove the two pinch bolts securing the throttle levers to the 'A' and 'B' bank carburetter butterfly spindles, remove the levers.
8. Unscrew the nut and withdraw the pinch bolt securing the 'fast-idle' lever to the carburetter spindle; withdraw the lever.
9. Unscrew the four half-nuts that retain the carburetter to the 'tee' piece flange; collect the washers.
10. Withdraw the carburetter and collect the gasket.

'B' bank carburetter
1. With a screwdriver, unscrew and remove the two screws securing the solenoid platform in position adjacent to 'B' bank carburetter. One screw is located on the air horn and has a nut underneath, and the other screw is situated in the filter housing.
2. Unscrew the ½ in. A/F nuts from the bolts that retain the air horn to the carburetter flange;

withdraw the bolts and collect the washers. Move the solenoid platform away from the carburetter.
3. Detach the hose from the side of the carburetter to the fuel receiver in the weakening device.
4. Carefully ease the air horn upwards away from the carburetter.
5. Completely remove the two pinch bolts securing the throttle levers to the 'A' and 'B' bank carburetter butterfly spindles, remove the levers.
6. Detach the vacuum supply hose from on top of the carburetter body adjacent to the carburetter and 'tee' piece flange.
7. Unscrew the remaining union from the fuel filter housing.
8. Unscrew the four half-nuts that retain the carburetter to the 'tee' piece flange; collect the washers.
9. Withdraw the carburetter and collect the gasket.

Dismantling of the components within the carburetters is not recommended as all carburetters are set and balanced by accurate flow measuring techniques during manufacture.

In certain isolated instances however, it maybe necessary to dismantle the carburetters and under these conditions the following procedure should be carefully followed.

Carburetter - To dismantle
Upper half (see Fig. U27)
1. Thoroughly clean the outside of the carburetter.
2. Unscrew the suction chamber retaining screws and remove the identity tag.
3. Lift the chamber assembly vertically from the body without tilting it.
4. Hold the piston firmly and pull the suction chamber, taking care not to bend the damper rod, until the damper retainer is freed from the piston rod. Unscrew and remove the damper.
5. Remove the piston spring, lift out the piston assembly and empty the oil from the piston rod.
6. Note the position of the needle guide etch mark in relation to the piston transfer holes for correct reassembly and unscrew the needle guide locking screw.
7. Withdraw the needle, guide and spring.

Lower half (see Fig. U28)
8. Mark the bottom cover-plate and body to ensure correct reassembly, unscrew the retaining screws and remove the cover complete with the sealing ring.
9. Remove the jet adjusting screw complete with 'O' ring.
10. Remove the jet adjusting lever retaining screw and spring.
11. Withdraw the jet complete with adjusting lever and disengage the lever.
12. Remove the float pivot spindle and aluminium washer.

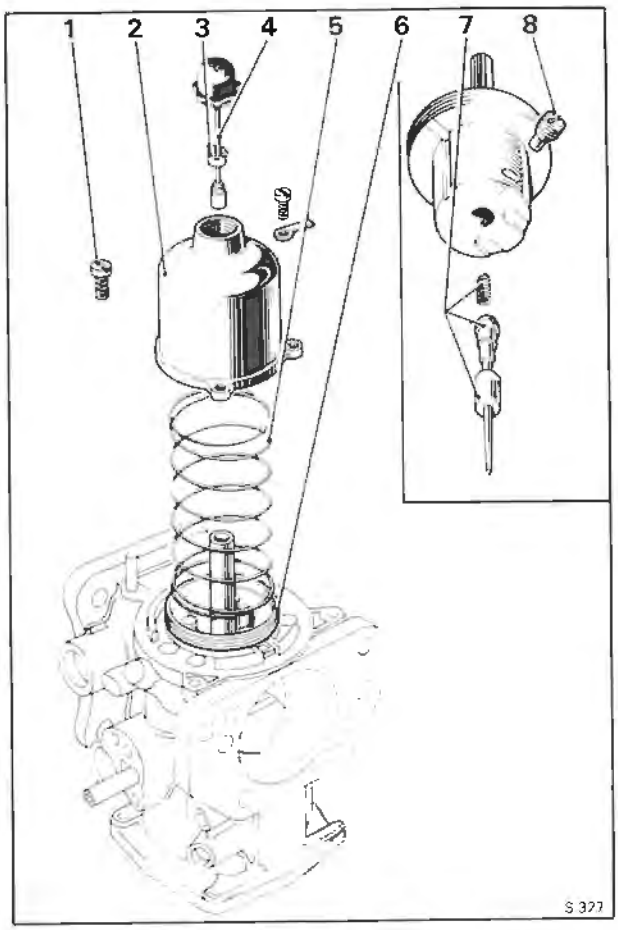

Fig. U27 Dismantling a carburetter (Upper half)
1 Suction chamber retaining screw
2 Suction chamber
3 Damper retainer (Piston ball race clip)
4 Damper rod
5 Spring
6 Piston
7 Spring-loaded needle assembly
8 Needle guide locking screw

13. Withdraw the float.
14. Remove the needle valve and unscrew the valve seat.
15. Unscrew the jet bearing locking nut and withdraw the bearing complete with fibre washer.

Throttle disc assembly (see Fig. U29)
16. Remove the throttle disc retaining screws.
17. Close the throttle and mark the position of the throttle disc in relation to the carburetter flange. **Do not mark the disc in the vicinity of the overrun valve.** Open the throttle and carefully withdraw the disc from the throttle spindle taking care not to damage the overrun valve.
18. Withdraw the throttle spindle and remove the seals, noting the way it is fitted in relation to the carburetter body to ensure correct reassembly.

Printed in England
© Rolls-Royce Motors Limited 1979

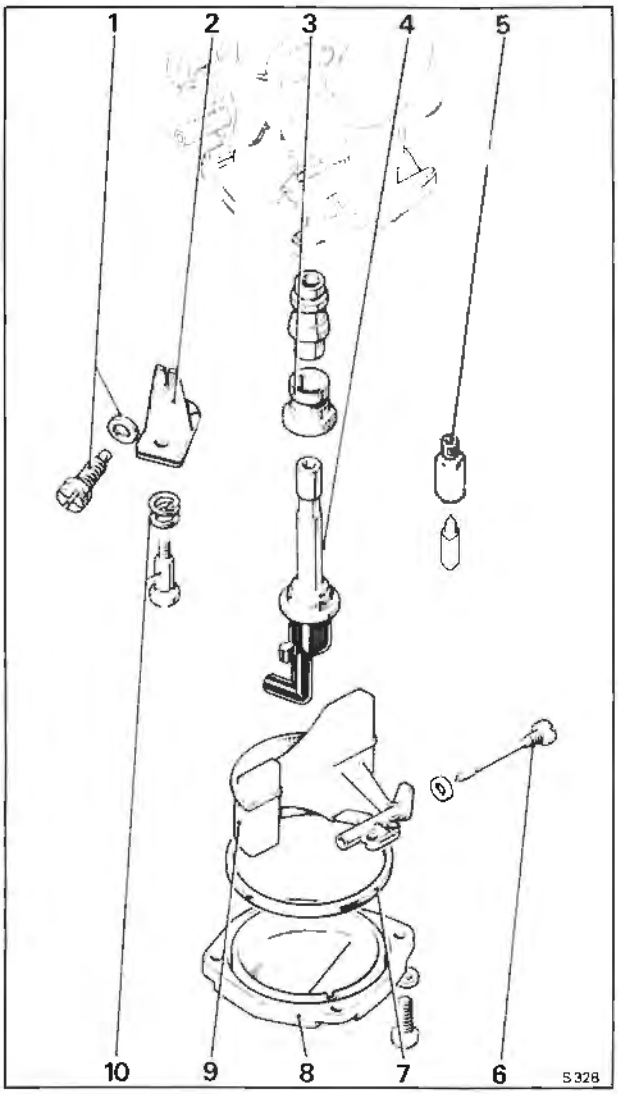

Fig. U28 Dismantling a carburetter (Lower half)

1 Jet adjusting screw and 'O' ring
2 Jet adjusting lever
3 Jet bearing assembly
4 Jet
5 Float chamber needle valve assembly
6 Float pivot spindle
7 Sealing ring
8 Bottom cover-plate
9 Float
10 Jet lever adjusting screw

Carburetter - To inspect

1. Examine the throttle spindle and its bearings in the carburetter body; check for excessive play, and fit new parts if necessary.
2. Examine the float needle and seating for damage and excessive wear; fit new parts if necessary.
3. Examine all rubber seals and 'O' rings for damage or deterioration; fit new parts if necessary. **The cover-plate sealing ring must be renewed.**
4. Examine the carburetter body for cracks and

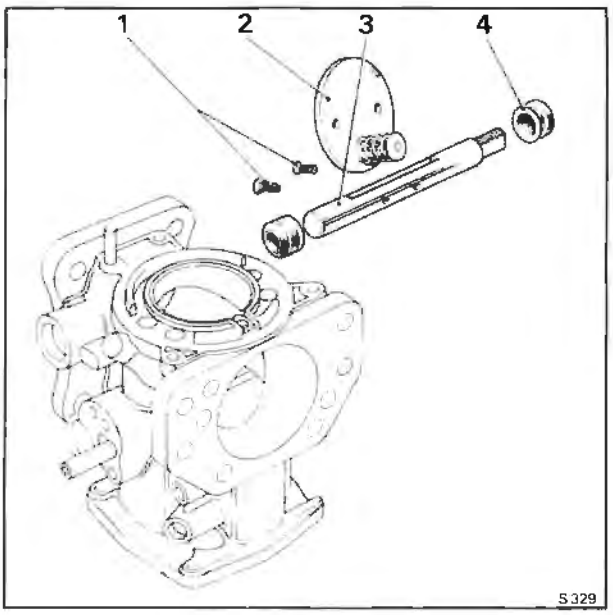

Fig. U29 Dismantling a carburetter (Throttle disc assembly)

1 Throttle disc retaining screws
2 Throttle disc assembly
3 Throttle spindle
4 Seal

damage and for security of the brass connections and the piston key.

5. Clean the inside of the suction chamber and piston rod guide with fuel or methylated spirit (denatured alcohol) and wipe dry. **Abrasives must not be used.**
6. Examine the suction chamber and piston for damage and signs of scoring.
7. Check that all the balls are in the piston ball race (2 rows, 6 per row). Fit the piston into the suction chamber, without the damper and spring, hold the assembly in a horizontal position and spin the piston. The piston should spin freely in the suction chamber without any tendency to stick.

Carburetter - To assemble

Assemble the carburetter by reversing the procedure given for removal, noting the following points.

1. Ensure that the throttle disc is fitted in its original position.
2. New throttle disc retaining screws must be used when refitting the disc. Ensure that the throttle disc is correctly positioned and closes correctly before tightening the retaining screws. Spread the split ends of the screws sufficiently to prevent turning.
3. Position the throttle spindle end seals just below the spindle housing flange.
4. When fitting the jet assembly to the adjusting lever ensure that the jet head moves freely in the bi-metal cut-out.

5. Fit a new float pivot spindle sealing washer or anneal the existing washer.

Check the level of the float in the float chamber (refer to Carburetter float level - To set).

6. Check that the small diameter of the jet adjusting screw engages the slot in the adjusting lever and set the jet 3,05 mm. (0.12 in.) below the bridge of the body.

7. Ensure that the needle guide etch mark aligns correctly with the piston transfer holes. After fitting the needle assembly, check that the shoulder of the guide aligns with the face of the piston (see Fig. U26).

8. To prevent the piston spring from being 'wound up' during reassembly, temporarily fit the piston and suction chamber, less the piston spring, to the body and pencil mark their relative positions to each other. Fit the spring to the piston, hold the suction chamber above the piston, align the pencil marks and lower the chamber over the spring and piston.

Before assembly ensure that the damper retainer (piston ball race clip) is refitted by pressing it fully into the piston rod (see Fig. U30).

The damper retainer (piston ball race clip) can also be installed with the suction chamber fitted to the engine by using fitting tool RH 9086.

Carburetter float level - To set

1. Remove the carburetter from the engine.

2. Invert the carburetter.

3. Mark the bottom cover-plate and carburetter to ensure correct assembly, unscrew the retaining screws and remove the cover complete with the sealing ring.

A new rubber sealing ring must be installed when fitting the cover-plate.

4. Ensure that the float chamber needle valve is held in the closed position by the weight of the float only.

5. Check that the lowest point on the float (see Fig. U31) is either level with the float chamber face, or up to 1,52 mm. (0.060 in.) below.

6. If necessary, adjust the float position by carefully bending the brass pad.

7. Check that the float pivots correctly about the spindle.

Carburetter air valve damper - To top-up

The upper portion of the guide spindle, attached to the air valve piston in each carburetter, is hollow and is filled with the same type of oil as used in the engine.

1. Unscrew the damper cap and carefully raise the damper until the damper, **together with the air valve piston,** reach the top of their travel. Ensure that the retainer is not displaced from its position in the piston rod (see Fig. U30).

2. Holding the damper and piston in the raised position; fill the recess in the damper retainer

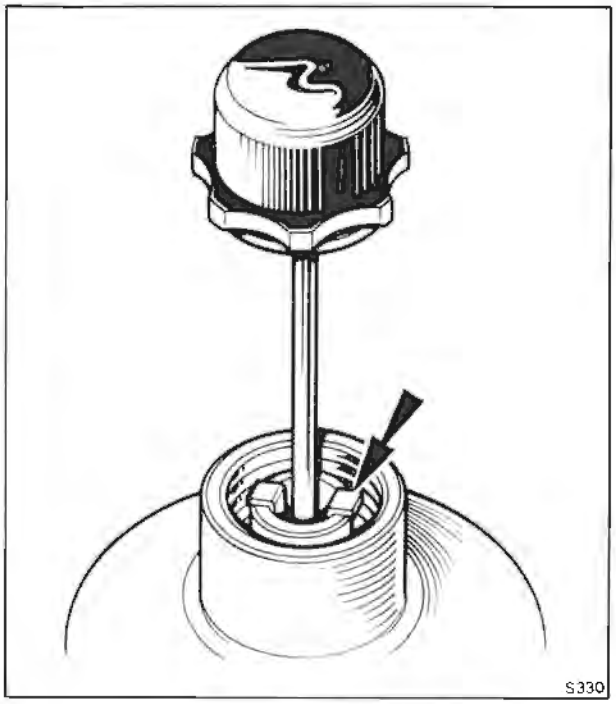

Fig. U30 Position of damper retainer

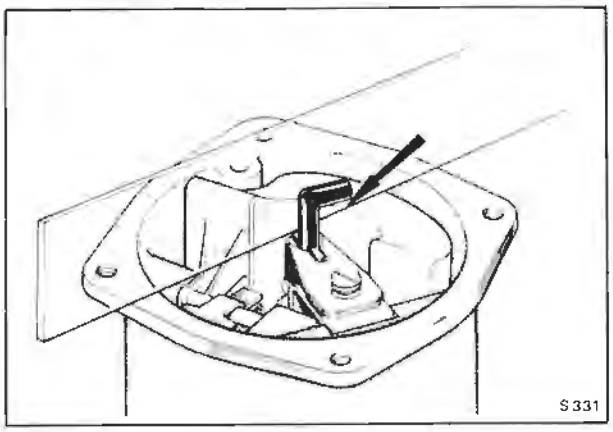

Fig. U31 Checking the float level

(piston ball race clip) with clean engine oil.

3. Lower the damper until the cap contacts the neck of the suction chamber, then carefully raise the damper and piston again and check the oil level; this is correct if the oil level is just visible in the bottom of the recess in the damper retainer (piston ball race clip). If the oil level is not visible, repeat the topping-up procedure until the oil level is correct.

4. Check that the damper retainer (piston ball race clip) is still in its correct position in the piston rod as shown in Figure U30, then lower the damper and screw the damper cap firmly into position.

If the damper retainer (piston ball race clip) becomes inadvertently displaced during the

Printed in England
© Rolls-Royce Motors Limited 1979

topping-up procedure or if the damper should be removed from the piston, do not fit the damper cap or run the engine until the retainer has been returned to its correct position in the piston rod. The special tool RH 9086 should be used to fit the damper retainer (piston ball race clip).

Carburetter throttle linkage - To fit and set (see Fig. U32)

1. Assemble 'A' bank and 'B' bank throttle levers (items 6 and 11) onto the carburetter spindles.
2. Fit the setting jig (RH 8880) into position on the throttle levers.
3. Fully close 'B' bank carburetter butterfly (item 7).
4. Tighten the pinch bolt securing 'B' bank throttle lever.
5. Fully close 'A' bank carburetter butterfly (item 2).
6. Tighten the pinch bolt securing 'A' bank throttle lever.
7. Fit the throttle spring (item 3) to the throttle levers.
8. Remove the setting jig from the throttle levers.
9. Fit the cross link guide bracket (item 9) to the carburetter 'tee' piece (item 5). Secure in position with two small screws which should be 'locked' using two tab washers.
10. Fit the cross link (item 10) and the eccentric throttle adjuster (item 4) onto the throttle levers, ensuring that both throttle butterflies are closed when adjusting and tightening the eccentric adjuster.

Note
The eccentric pin should be set in the lowest position.

11. Ensure that the cross link guide (item 9) has a clearance of between 1,27 mm. (0.050 in.) and 1,78 mm. (0.070 in.) with the cross link. If necessary bend the guide to give these clearances.
12. Check that the throttle linkage moves freely.
13. Fit the idle stop screw (item 8) and lock plate; adjust until the screw just contacts the stop bracket (item 9) with the throttle butterflies remaining in the closed throttle position.
14. Screw down the idle stop screw half a turn.
15. Connect one end of the drive link (item 12) to the 'B' bank throttle lever and the other end, to the manifold shaft lever (item 13).
16. Operate the linkage to ensure free movement.
17. With the throttles in the closed position check that the 'A' bank control shaft to control rod lever (item 14) on the rear of the manifold shaft is in line with the front manifold shaft lever (item 13). Tighten the securing bolts on both levers.
18. Operate the mechanism; check for freedom of movement within the linkage and also clearance with the various engine components.
19. To set the remainder of the linkage from the control rod lever on the rear of the manifold shaft to the accelerator pedal refer to Chapter T - Transmission and Chapter K - Fuel system.

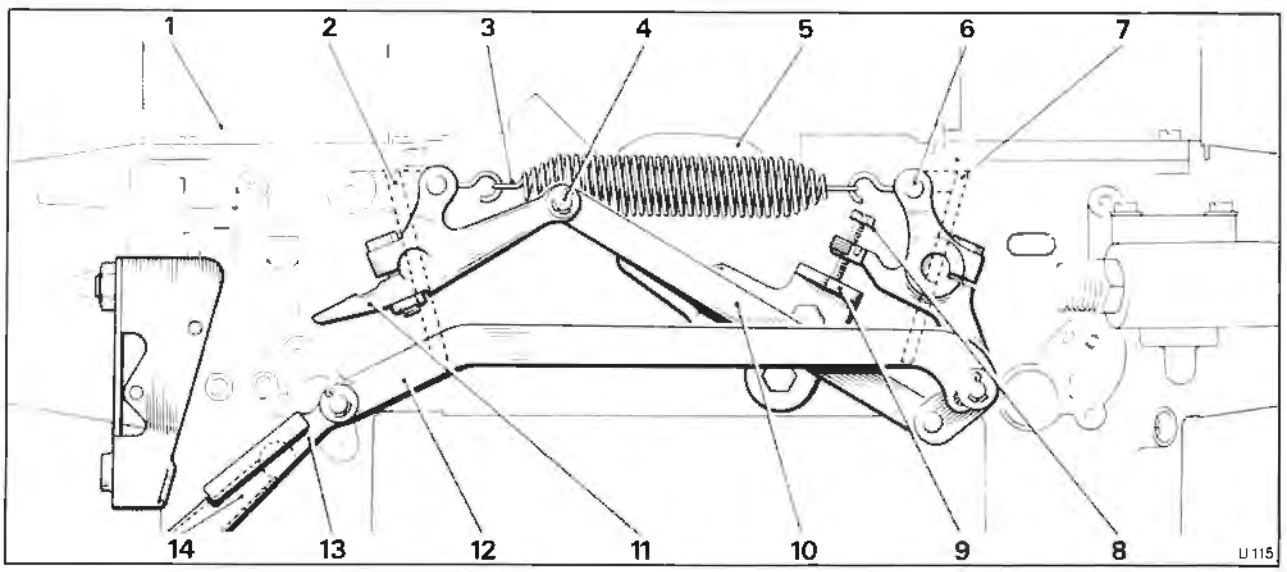

Fig. U32 Carburetter throttle linkage

1 'A' bank carburetter
2 'A' bank carburetter throttle butterfly
3 Throttle spring
4 Eccentric throttle adjuster
5 Carburetter 'tee' piece
6 'B' bank carburetter throttle lever
7 'B' bank carburetter throttle butterfly
8 Idle stop screw
9 Throttle cross link guide bracket
10 Cross link
11 'A' bank carburetter throttle lever
12 Drive link
13 Front manifold shaft lever
14 Rear manifold shaft lever

Carburetters - To set

The carburetters fitted to these cars are adjusted at the factory using special equipment to ensure that their settings comply with the current emission control regulations.

Under normal circumstances the carburetters should not require adjustment in service.

If however, adjustment is found necessary due to inadvertent disturbance or replacement of a component set the carburetters by carrying out the following operations in the sequence given.

a. Set throttle linkage and temporarily set engine idle speed. Check linkage clearances.
b. Set cold start fast-idle cam.
c. Tune carburetters.
d. Set cold start fast-idle speed.
e. Set the Kickdown and Full throttle E.G.R. cut-out micro-switch.

Carburetter tuning

Preliminary checks

Before tuning the carburetters the following checks should be carried out.

Ensure that the vehicle is in 'Park', the parking brake firmly applied and that the gear range actuator thermal cut-out has been removed from the main fusebox.

1. Check the condition of the sparking plugs.
2. Check the ignition timing.
3. Check the flow through the choke stove pipe.
4. Check the entire induction system for air leaks.
5. Check the purge line flow rate.
6. Ensure that the air conditioning system is switched off.
7. Start the engine and warm up; allow to run for at least 5 minutes after the thermostat has opened.
8. Stop the engine, ensure that the choke butterfly valve is fully open and the choke fast-idle off.
9. Connect an electric impulse tachometer in accordance with manufacturer's instructions.
10. Check the float chamber depression.
11. Check the exhaust gas recirculation system for correct operation.
12. Check and set the full throttle exhaust gas recirculation cut-out micro-switch situated under the accelerator pedal.

Carburetter idle air balance

1. Ensure that the usual safety precautions are carried out (i.e. parking brake firmly applied, gear range selector lever in 'Park', etc.) and connect an impluse tachometer in accordance with the manufacturer's instructions.
2. Disconnect the speed control chain.
3. Start and run the engine until normal operating temperature is attained.
4. Stop the engine.
5. Fit the dial gauges RH 8841 with RH 9105 (kit to convert dial gauges to fit the HIF7 carburetters) to the carburetter dashpots in place of the dampers.
6. Zero the gauges with the engine stopped and lightly tighten the gauge clamp screws.
7. Start and run the engine at the idle speed setting (650 r.p.m.); adjust the carburetter piston lifts to be equal (within 10%) using the eccentric adjuster (see Fig. U32).
8. The average piston lift reading should now be between 2,03 mm. and 2,54 mm. (0.080 in. and 0.100 in.).

If the idle speed piston lift is over 2,54 mm. (0.100 in.) check the ignition timing at idle as this condition may result in unsatisfactory driveability.

9. Stop the engine and remove the impulse tachometer.
10. Remove the dial gauges and fit the carburetter dampers. **Ensure that the dashpot ball race clips (piston damper retainers) are fitted correctly and are pressed fully into the piston rod (see Fig. U30) using tool RH 9086.**
11. Connect the speed control chain and adjust to give a minimum slack condition, consistant with no impediment to the throttle lever to return to the idle speed position.

Carburetter mixture strength - To set

1. Ensure that the usual safety precautions are carried out (i.e. parking brake firmly applied, gear range selector lever in 'Park' etc.) and connect an impulse tachometer in accordance with the manufacturer's instructions.
2. Remove the air intake, blank off the hot idle compensator feed drilling (see Fig. U33) and replace the intake.

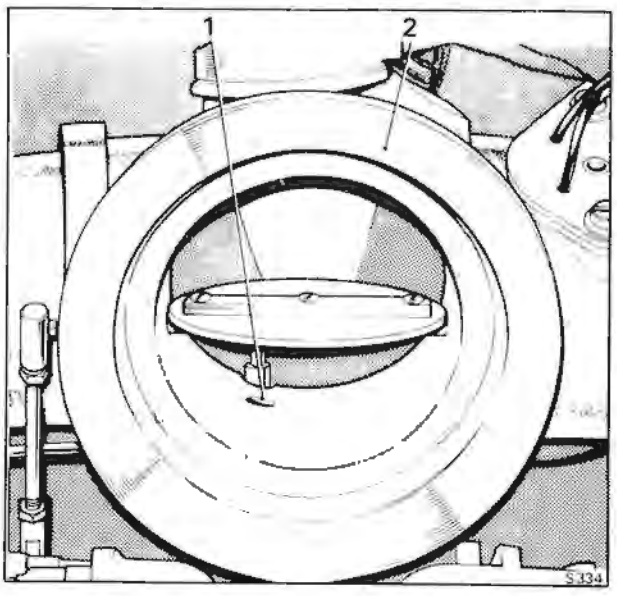

Fig. U33 Hot idle mixture compensator feed
1 Hot idle compensator feed
2 Air intake butterfly housing

Printed in England
© Rolls-Royce Motors Limited 1979

3. Remove the air inlet hose from the air diverter valve and fit a blank over the valve (a suitable blank may be produced from a short length of rubber hose with one end plugged).

Note
The air injection system is inoperative when the air diverter inlet air hose is disconnected from the air pump. The valve must be blanked to prevent air being drawn into the exhaust port by pulsations in the exhaust system since this would affect the idle CO reading.

4. Disconnect the E.G.R. valve signal hose at the solenoid, blank off the hose.
5. Unscrew and remove the pressure tapping cap from the weakening device.
6. Ensure that the engine has run for at least 25 minutes after the thermostat has opened.
7. Purge the engine at 2 000 r.p.m. in 'Neutral' for ¼ minute. Allow the engine speed to return to the idle setting and ensure that this is 650 r.p.m.; adjust if necessary using the idle stop screw.
8. Insert the probe of a CO meter into either exhaust system tailpipe and check the reading.
9. The CO meter reading should be 1% to 4%. If the reading is outside the limits quoted
a. Check for induction system leaks (if below 1%)
b. Check the choke stove and purge line flow rates.
10. If after carrying out Operation 8 the idle speed CO meter reading is still outside the limits quoted, the carburetter mixture screws (see Fig. U24) may be adjusted by equal amounts up to half a turn in the same direction in order to achieve the mean limit of 2.5%. No attempt should be made to adjust the CO reading if it is in the region of 2.5% to 4.0%.

Note
a. Clockwise rotation of the mixture screws will richen the mixture.
b. The tuning operations should be carried out in the shortest possible time. If the time exceeds 3 minutes, run the engine at 2 000 r.p.m. in 'Neutral' for ¼ minute and then resume the tuning operations. Repeat this purging operation if a further period of 3 minutes is exceeded.

After purging the system gently tap all around the neck of the carburetter suction chamber with a lightweight non-metallic object (i.e. the wooden handle of a small screwdriver), to eliminate carburetter piston hysteresis.

11. Stop the engine
12. Fit the pressure tapping cap to the weakening device, fit a new sealing washer if necessary.
13. Remove the blank from the air diverter valve and connect the feed hose from the air pump to the diverter valve.
14. Remove the blank from the E.G.R. valve signal hose and connect the hose to the solenoid.
15. Start the engine and check the idle speed, this should be 650 r.p.m.; adjust by means of the idle stop screw (refer to Section U6).
16. Stop the engine, remove the air intake and discard the blank from the hot idle compensator feed drilling; fit the air intake.
17. Remove the impulse tachometer.

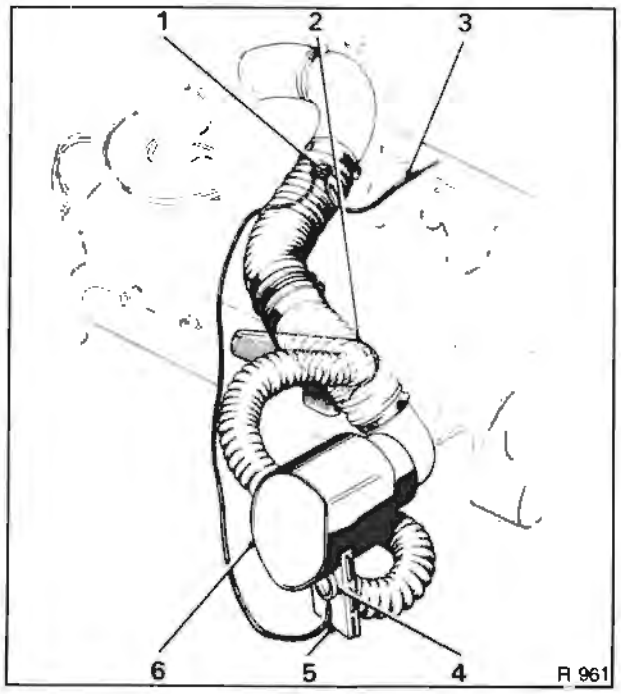

Fig. U34 Temperature controlled air intake
1 Temperature sensor
2 Hot air scoop
3 Manifold vacuum hose
4 Air blend valve
5 Cold air intake
6 Air cleaner/silencer

Temperature controlled air intake

To ensure rapid warm-up and improve control of the air/fuel ratio a temperature controlled air intake is fitted (see Fig. U34).

A vacuum operated blending valve attached to the air cleaner assembly is controlled by a thermal sensor in the air intake elbow. This valve blends hot air from a pick-up point (scoop) adjacent to the exhaust manifold with cold air from under the front wing; thus maintaining a constant temperature of the intake air as it enters the carburetters.

All other details for the Temperature Controlled Air Intake System are given in Chapter K except for the checking procedure which is as follows.

Temperature controlled air intake - To check

1. Disconnect the air intake hose at the intake elbow and check that the correct temperature sensor is fitted, this should be colour coded white.
2. Disconnect both vacuum hoses at the temperature sensor.
3. Place the open ends of both hoses together and check that there is no obvious air leak. Detach the open ends of the hoses from each other (i.e. release

the vacuum sharply) and listen for the vacuum motor within the wing to 'click' open.

4. Reconnect the hoses.

Note

If there is an air leak or the operation of the temperature controlled air intake is suspect, remove the right-hand front underwing sheet and check the hose connection to the vacuum motor; also observe the operation of the temperature flap.

Printed in England

© Rolls-Royce Motors Limited 1979

Section U6

Ignition system

Data

Ignition timing 9° B.T.D.C. (Initial static setting)
15° B.T.D.C. at 1 200 r.p.m.
7° - 13° B.T.D.C. at idle speed (650 r.p.m.)
(Approach 1 200 r.p.m. from a higher speed).

Ignition control system

The ignition system utilises an Opus distributor (in which an oscillator pick-up and control unit replace the conventional contact breaker), a high load ignition coil and a ballast resistor. The control unit comprises an electronic oscillator, amplifier and power transistor.

A drum with eight ferrite rods (one per cylinder) moulded into the outer edge is mounted onto the distributor drive-shaft. As the drum rotates a voltage is created each time a ferrite rod passes the oscillator pick-up, this signal is then amplified and used to switch off the normally conducting power transistor in the primary coil circuit thus inducing a high voltage in the secondary winding which is distributed to the sparking plugs in the normal manner.

The distributor has a conventional centrifugal advance mechanism.

The Opus distributor provides increased accuracy of timing and increased service life before maintenance is required.

For the removal and fitting instructions of the ignition system components refer to Chapter M.

Ignition - To time (using a stroboscope)

The ignition is timed on A1 cylinder which is located at the front left-hand side of the engine (viewed from the front of the car).

Note

If the ignition timing is to be set, ensure that the sparking plugs are in good condition before running the engine; if they require cleaning or renewal the sparking plugs gap should be set to 0,9 mm. (0.035 in.).

1. To check the ignition timing commence by running the engine until normal operating temperature is attained and the choke fast-idle is in the off position. Switch off the engine.
2. Connect a stroboscope and a tachometer to the engine as described in the instructions supplied with the respective equipment.
3. Start the engine and adjust the throttle stop screw to give an idle speed of 1 200 r.p.m. When setting the engine idle speed reduce from a higher speed to 1 200 r.p.m.
4. Direct the flashing light of the stroboscope onto the crankshaft damper timing marks and timing pointer; the pointer is positioned on the right-hand side of the crankshaft damper when viewed from the front of the engine.
5. If the timing pointer does not coincide with the 15° B.T.D.C. mark on the crankshaft damper adjust the ignition timing as follows.
6. Release the clamp screw on the distributor and rotate the head of the distributor in the appropriate direction until the correct timing is obtained. Clockwise rotation of the distributor head advances the ignition and conversely anti-clockwise rotation retards the ignition. After adjustment has been carried out tighten the clamp screw and again check to ensure that the timing has not altered whilst tightening the clamp screw.
7. Set the engine idle speed to 650 r.p.m.
8. Direct the flashing light of the stroboscope onto the crankshaft damper timing marks and timing pointer. Check that the ignition timing is approximately 7° - 13°B.T.D.C.
9. Stop the engine and remove all the test equipment.

Setting the engine idle speed

Ensure that the engine is at normal operating temperature and that the choke fast-idle is in the off position.

The air conditioning system must be switched off and a tachometer connected to the engine in accordance with the manufacturer's instructions.

1. Stop the engine, remove the air intake and blank off the hot idle compensator feed drilling (see Fig. U33); replace the air intake.
2. Start the engine and, if necessary, adjust the engine idle speed to 650 r.p.m. using the throttle stop screw.
3. Stop the engine and remove the air intake. Remove the blank from the hot idle compensator feed drilling and fit the air intake. Detach the test equipment.

Distributor maintenance

The distributor requires no routine maintenance except that, at the mileage intervals specified in the Service Schedules, the moulded cover and H.T. rotor arm should be removed and the spindle shaft

Printed in England
© Rolls-Royce Motors Limited 1979
November 1979
TSD 4206
(Australia
1979 Model Year)

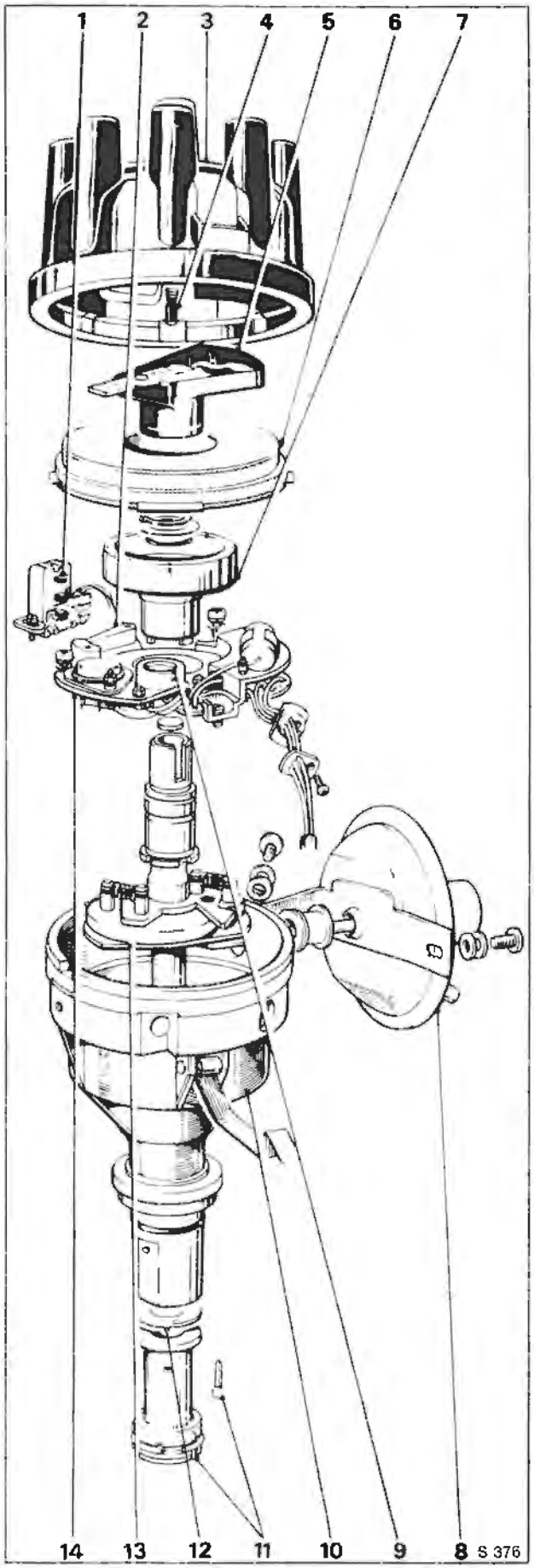

bearings lubricated by inserting a few drops of engine oil onto the felt pad. The automatic advance mechanism should also be lubricated at this time with a few drops of engine oil inserted through apertures in the base plate.

Sparking plugs

The sparking plugs approved for this car are Champion RN 14Y. Before fitting the plugs, set the gaps with the aid of a feeler gauge to 0,9 mm. (0.035 in.) and lightly smear the threads with 'Graphogen' grease.

Fig U35 Ignition distributor

1 Pick-up module
2 Pick-up arm
3 Distributor cover (cap)
4 High tension brush and spring
5 Rotor arm
6 Flash over shield (dust cover)
7 Timing rotor
8 Vacuum advance unit (not connected)
9 Control unit
10 Distributor body
11 Driving dog and pin
12 Thrust washer
13 Automatic advance mechanism
14 Electronic module assembly

Section U7

Electrical components

The electrical components described in this section would normally appear in Chapter M - Electrical system, however, as they are used in connection with the emission control system it is thought more practical to include the information in this Chapter.

The components concerned are as follows.

E.G.R. system and Weakening system cut-out switch
Anti 'run-on' solenoid
E.G.R. system and Weakening system cut-off solenoid
Kickdown and Full throttle E.G.R. cut-out micro-switch

E.G.R. system and Weakening system cut-out switch

The bi-metal cut-out switch is situated in the side of the air intake elbow adjacent to the choke stove take-off pipe and 'B' bank carburetter (see Fig. U36).

E.G.R. system and Weakening system cut-out switch - To remove

1. Withdraw the protective sheath and detach the electrical connections, noting the position of the connections to assist identification on assembly.
2. Unscrew and remove the three setscrews and spring washers.
3. Withdraw the cut-out switch.

E.G.R. system and Weakening system cut-out switch - To fit

Fit the cut-out switch by reversing the procedure given for removal.

1. Ensure that the gasket is in a good condition.
2. The setscrews must be fitted with spring washers.
3. The protective sheath must be fitted over the electrical connections.

E.G.R. system and Weakening system cut-out switch circuit wiring - To check

1. Detach the electrical connection from the E.G.R and Weakening systems cut-out switch.
2. Attach one side of a test lamp to the White cable in the connection block and the other side to a good earth.
3. Switch on the ignition noting that the test lamp bulb illuminates.
4. Switch off the ignition noting that the test lamp bulb extinguishes.

E.G.R. system and Weakening system cut-out switch - To check

1. Withdraw the protective sheath from the electrical connections.
2. Do not disturb any wiring but connect both electrical connections via a test lamp.
3. Ensure that the engine is cold [i.e. intake air temperature below approximately 14° C. (57° F.)] and switch on the ignition.

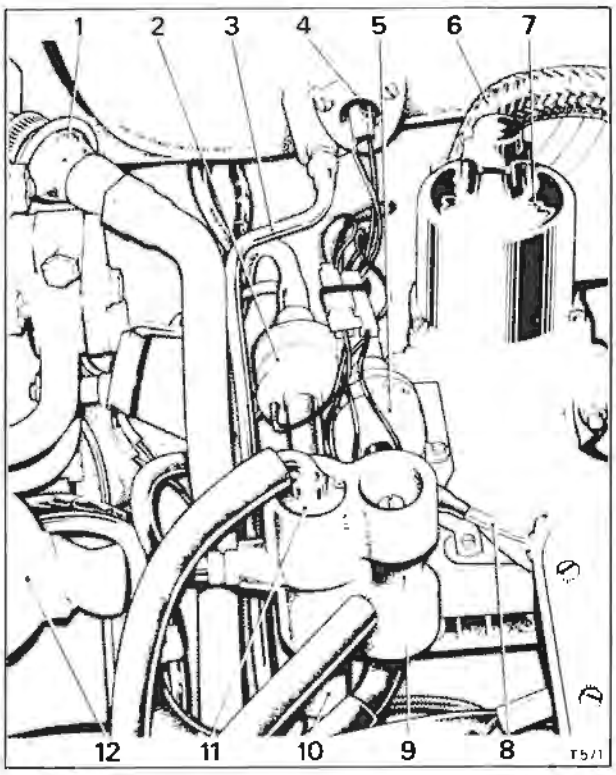

Fig. U36 Solenoid platform

1 Check valve
2 Anti 'run-on' solenoid
3 Choke stove pipe
4 E.G.R. system and Weakening system cut-out switch
5 E.G.R. system and Weakening system cut-off solenoid
6 Exhaust gas distribution pipe
7 'B' bank carburetter
8 E.G.R. signal hose
9 Mixture weakening device
10 Fuel receiver
11 Float chamber vent valve
12 Engine oil filler cap

Printed in England
© Rolls-Royce Motors Limited 1980
July 1980
TSD 4200
(Australia
1979 Model Year)

4. Check that the test lamp bulb is illuminated.
5. Start and run the engine; as the engine warms-up [i.e. the inlet air temperature exceeds approximately 14° C. (57° F.)] the test lamp bulb should extinguish.

Anti 'run-on' solenoid

The anti 'run-on' solenoid is situated on a platform adjacent to 'B' bank carburetter; it is the foremost of the two solenoids fitted on the platform.

The use of low octane fuel often causes an engine to 'diesel' (i.e. to continue to run-on after the ignition has been switched off, particularly when the engine is hot). To prevent this an anti 'run-on' solenoid is fitted between the fuel receiver and the induction manifold (see Figs. U4 and U36). When the ignition is switched off the solenoid valve opens and connects the weakening system to the induction manifold, thus creating a high depression in the float chambers which cuts off the fuel supply.

Anti 'run-on' solenoid - To remove

1. Disconnect the rubber hose from either side of the solenoid.
2. Disconnect the two electrical leads at their electrical connections.
3. Unscrew and remove the two screws situated one on either side of the solenoid body.
4. Withdraw the anti 'run-on' solenoid.

Anti 'run-on' solenoid - To fit

Fit the anti 'run-on' solenoid by reversing the procedure given for removal.

Anti 'run-on' solenoid circuit wiring - To check

1. Connect a test lamp across the two electrical connections to the solenoid. **Do not disconnect the two connections.**
2. Switch on the ignition and check that the test lamp bulb illuminates.
3. Switch off the ignition and check that the test lamp bulb is extinguished.

Anti 'run-on' solenoid - To check

1. Ensure that the usual safety precautions are carried out (i.e. parking brake firmly applied, gear range selector lever in 'Park', etc.).
2. Connect an impulse tachometer in accordance with the manufacturer's instructions.
3. Detach the weakening device pressure tapping cap (see Fig. U19) and connect a manometer capable of reading 0 to 15,24 cm. (0 to 6 in.) of water to the tapping.
4. Disconnect the carburetter vacuum signal to the E.G.R. valves at the cut-off solenoid end of the hose. Blank off the signal hose.
5. Start and run the engine at the idle speed setting (650 r.p.m.).
6. Switch off the engine and observe the reading on the manometer. The reading should momentarily increase to approximately 15,24 cm.(6.0 in.) as the engine stops.
7. If the reading does not increase, the operation of the anti 'run-on' solenoid is incorrect.

This could be caused by the following.

a. A blockage in the hose (see Fig. U19) from the anti 'run-on' solenoid to the weakening device.
b. A blockage in the hose (see Fig. U19) from the anti 'run-on' solenoid to the vacuum manifold or in the vacuum manifold.
c. Incorrect wiring to the anti 'run-on' solenoid.
d. Faulty anti 'run-on' solenoid.

E.G.R. system and Weakening system cut-off solenoid

The E.G.R. system and weakening system cut-off solenoid is the rearmost of the two solenoids mounted on the platform adjacent to 'B' bank carburetter (see Figs. U4 and U36).

E.G.R. system and Weakening system cut-off solenoid - To remove

1. Detach the electrical connections, noting the position of the connections to assist identification when assembling.
2. Detach the rubber hose from either side of the solenoid.
3. Unscrew the two 'cheese-headed' mounting screws and withdraw the solenoid.

E.G.R. system and Weakening system cut-off solenoid - To fit

Fit the cut-off solenoid by reversing the procedure given for removal.

E.G.R. system and Weakening system cut-off solenoid circuit wiring - To check

1. Connect a test lamp across the two electrical connections to the solenoid. **Do not disconnect the two connections.**
2. Ensure the engine is cold.
3. Switch on the ignition and start the engine noting that the bulb of the test lamp is illuminated.
4. Run the engine; noting that as the engine warms-up [the inlet air temperature reaches approximately 14° C. (57° F.)] the test lamp bulb should extinguish.
5. Stop the engine and allow to cool, noting that when the engine becomes cold [the air in the intake drops to a temperature of approximately 12° C. (54° F.)] the test lamp bulb again illuminates.

E.G.R. system and Weakening system cut-off solenoid - To check

1. Detach the carburetter vacuum signal to weakening system cut-off solenoid hose at the solenoid and blank off the hose.

Connect a suitable length of hose to the solenoid connection.

2. Clean the open end of the additional hose.

3. Switch on the ignition.
4. Place the hose in the mouth and apply pressure.
5. If the operation of the solenoid is correct note that the following conditions apply.

a. With a cold engine [i.e. the inlet air temperature below approximately 14° C. (57° F.)] blowing air through the hose **should not** be possible.

b. As the engine warms-up [i.e. an inlet air temperature of approximately 14° C. (57° F.) or above] blowing air through the hose should be possible.

c. As the engine again cools [i.e. the inlet air temperature drops below approximately 12° C. (54° F.)] the conditions described in (a) should again apply.

Kickdown and Full throttle E.G.R. cut-out micro-switch

This micro-switch is situated on the underside of the car body below the accelerator pedal, it is a dual purpose micro-switch providing kickdown (detent) for the torque converter transmission and cut-out for the E.G.R. system.

Kickdown and Full throttle E.G.R. cut-out micro-switch - To remove

1. Drive the car onto a ramp and raise to a suitable working height.
2. From inside the car, locate the micro-switch operating plunger beneath the accelerator pedal.
3. Unscrew the large retaining nut and withdraw the washer.
4. From under the car detach the 'Lucar' connections and withdraw the micro-switch assembly.

Kickdown and Full throttle E.G.R. cut-out micro-switch - To dismantle

The assembly comprises the micro-switch, plunger and casing, the assembly should be removed from the car before any dismantling is commenced.

1. Using a screwdriver carefully 'ease back' the indentations which crimp around the cover of the assembly.
2. Remove the cover.
3. Disconnect the two electrical cables from the micro-switch. The White/Green cable has a 'Lucar' connection and the White cable is retained by a small cheeseheed screw.
4. Unscrew the two 6 B.A. nuts securing the micro-switch to its mounting bracket. Withdraw the cheesehead screws and collect the two washers from each screw. Withdraw the micro-switch.
5. Unscrew the two cheesehead screws retaining the micro-switch mounting bracket. Withdraw the bracket.
6. Remove the circlip from around the plunger assembly.
7. Withdraw the plunger assembly and spring.

Kickdown and Full throttle E.G.R. cut-out micro-switch - To assemble

Assemble the micro-switch and plunger by reversing the procedure given for dismantling noting the following points.

1. Ensure that the rubber seal is in a good condition and fitted securely to the body of the assembly. The seal is secured using Dunlop Adhesive S1240 or equivalent.

Kickdown and Full throttle E.G.R. cut-out micro-switch - To set

1. Ensure that the carburetter linkage (refer to Section U5) and the accelerator pedal linkage (refer to Section K7) are correctly set. Swing the micro-switch towards the base of the plunger until a 0,254 mm. to 0,762 mm. (0.010 in. to 0.030 in.) gap exists between the micro-switch button and the plunger.
2. Tighten the micro-switch securing nuts and afterwards, check that the gap set in Operation 1 has not been disturbed.
3. Slowly depress the plunger to obtain full stroke. Check that the switch operates (audible click) during this operation.
4. Ensure that with the main plunger fully depressed it is still clear of the micro-switch case (see Fig. U37).
5. Slowly release the plunger ensuring that the

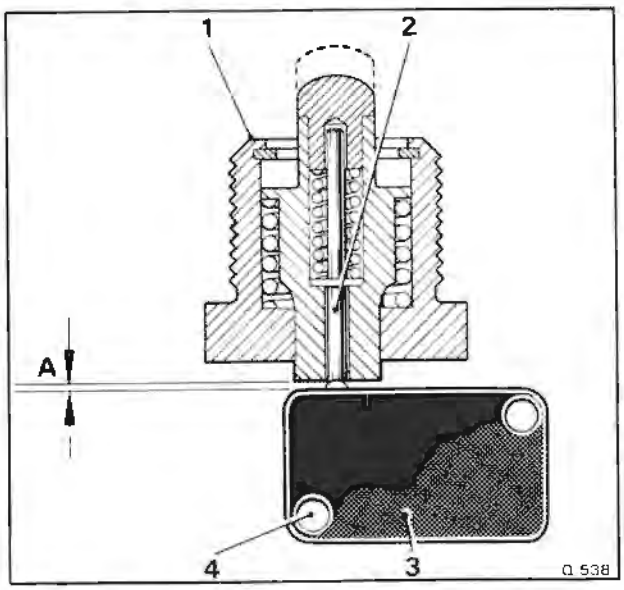

Fig. U37 Kickdown and Full throttle E.G.R. cut-out micro-switch

1 Kickdown and Full throttle E.G.R. cut-out micro-switch
2 Secondary plunger
3 Micro-switch
4 Elongated hole in mounting plate (micro-switch adjustment)
A Clearance of 0,127 mm. (0.005 in.)

Printed in England
© Rolls-Royce Motors Limited 1979

micro-switch contacts open (audible click).
6. Ensure that the clearance set between the plunger and the micro-switch button, remains as set in Operation 1.

Kickdown and Full throttle E.G.R. cut-out micro-switch - To check
To check the circuit wiring and micro-switch operation for full throttle E.G.R. cut-off proceed as follows.
1. Carry out Operations 1 to 4 inclusive under the heading 'E.G.R. system and Weakening system solenoid circuit wiring - To check'.
2. Stop the engine and depress the accelerator to activate the micro-switch.
3. Ensure that the test lamp bulb is illuminated whilst the full throttle position is maintained with the accelerator pedal.

Section U8

Fault diagnosis

Symptoms	Possible Cause
1. Engine will not start. (Starter motor operating)	**1.** (a) Ignition circuit broken. (b) Failed anti 'run-on' solenoid or failure of electrical supply circuit. (c) Ignition system faulty. (d) Damaged or contaminated ignition high tension circuit. (e) Blocked fuel feed line, fouled float chamber filters. (f) Faulty choke bi-metal coil. (g) Choke solenoid inoperative. (h) Faulty choke 'fast-idle' mechanism. (i) Air leak into induction system. (j) Faulty hot idle mixture compensator. (k) Weakening device filter blocked, weakening device air intake non-return valve failed or blockage in rubber connecting hoses. (l) Faulty weakening device cut-off solenoid or failure of electrical supply circuit. (m) Faulty weakening device control switch or failure of electrical supply circuit. (n) Dislodged venturi in weakening device. (o) Flooding of carburetter float chamber or jet. (p) Exhaust gas recirculation valve(s) failed.
2. Engine idles very roughly.	**2.** (a) Ignition system faulty. (b) Fouled sparking plugs. (c) Damaged or contaminated ignition high tension circuit. (d) Air leak into induction system. (e) Faulty hot idle mixture compensator. (f) Weakening device filter blocked, weakening device air intake non-return valve failed or blockage in rubber connecting hoses. (g) Badly worn or damaged carburetter control linkage. (h) Flooding of carburetter float chamber or jet. (i) Sticking carburetter piston. (j) Incorrect operation of carburetter jet compensation. (k) Fouled carburetter float chamber or jet. (l) Exhaust gas recirculation valve(s) failed. (m) Incorrect operation of temperature controlled air intake system.
3. Engine stalls.	**3.** (a) Ignition circuit broken. (b) Failed anti 'run-on' solenoid or failure of electrical supply circuit. (c) Ignition system faulty. (d) Damaged or contaminated ignition high tension circuit.

Printed in England

© Rolls-Royce Motors Limited 1979

Symptoms	Possible Cause
3. Engine stalls (continued)	(e) Blocked fuel feed line, fouled float chamber filters. (f) Air leak into induction system. (g) Faulty hot idle mixture compensator. (h) Weakening device filter blocked, weakening device air intake non-return valve failed or blockage in rubber connecting hoses. (i) Badly worn or damaged carburetter control linkage. (j) Flooding of carburetter float chamber or jet. (k) Sticking carburetter piston. (l) Incorrect operation of carburetter jet compensation. (m) Fouled carburetter float chamber or jet. (n) Exhaust gas recirculation valve(s) failed.
4. (i) Engine shows signs of power loss evident at high speeds and loading. (ii) Engine misfires particularly on hard acceleration from low speed.	**4.** (a) Ignition system faulty. (b) Fouled sparking plugs. (c) Damaged or contaminated ignition high tension circuit. (d) Blocked fuel feed line, fouled float chamber filters. (e) Choke system operation incorrect. (f) Sticking carburetter piston. (g) Fouled carburetter float chamber or jet. (h) Faulty exhaust gas recirculation full throttle cut-out switch or failure of electrical supply circuit. (i) Exhaust gas recirculation valve(s) failed. (j) Fouled exhaust gas recirculation valves cut-off solenoid or electrical supply circuit.
5. Engine hesitates or misfires under light load.	**5.** (a) Failed anti 'run-on' solenoid or failure of electrical supply circuit. (b) Ignition system faulty. (c) Fouled sparking plugs. (d) Damaged or contaminated ignition high tension circuit. (e) Blocked fuel feed line, fouled float chamber filters. (f) Air leak into induction system. (g) Faulty hot idle mixture compensator. (h) Weakening device filter blocked, weakening device air intake non-return valve failed or blockage in rubber connecting hoses. (i) Dislodged venturi in weakening device. (j) Flooding of carburetter float chamber or jet. (k) Incorrect operation of carburetter jet compensation. (l) Fouled carburetter float chamber or jet. (m) Exhaust gas recirculation valve(s) failed. (n) Incorrect operation of temperature controlled air intake system. (o) Faulty air diverter valve.
6. Increase in fuel consumption.	**6.** (a) Ignition system faulty. (b) Faulty choke bi-metal coil. (c) Choke system operation incorrect.

Symptoms	Possible Cause
6. Increase in fuel consumption (continued)	(d) Air leak into induction system. (e) Faulty hot idle mixture compensator. (f) Weakening device filter blocked, weakening device air intake non-return valve failed or blockage in rubber connecting hoses. (g) Faulty weakening device cut-off solenoid or failure of electrical supply circuit. (h) Faulty weakening device control switch or failure of electrical supply circuit. (i) Air leak in mixture weakening system. (j) Flooding of carburetter float chamber or jet. (k) Sticking carburetter piston. (l) Incorrect operation of carburetter jet compensation. (m) Incorrect purge flow rate. (n) Exhaust gas recirculation valve(s) failed. (o) Faulty air diverter valve.
7. Decrease in fuel consumption.	**7.** (a) Air leak in mixture weakening system. (b) Incorrect operation of carburetter jet compensation. (c) Incorrect purge flow rate. (d) Faulty exhaust gas recirculation temperature control switch or failure of electrical supply circuit. (e) Exhaust gas recirculation valve(s) failed.
8. Engine 'backfires' on overrun.	**8.** (a) Ignition system faulty. (b) Air leak into induction system. (c) Faulty hot idle mixture compensator. (d) Exhaust gas recirculation valve(s) failed. (e) Faulty air diverter valve.
9. Sudden increase in engine idle speed.	**9.** (a) Faulty choke fast-idle mechanism. (b) Failed carburetter overrun valve.
10. Excessive noise from air injection pump or system.	**10.** (a) Faulty or damaged air injection pump, relief or check valves, connecting hoses or pipes. (b) Faulty air diverter valve.

Printed in England

© Rolls-Royce Motors Limited 1979

Section U9

Workshop tools

Tool Number	Description
RH 8090	Pliers - wire hose clips
RH 8725	Flowmeter (rotameter type)
RH 8841	Dial gauge - carburetter piston lift
RH 8880	Setting jig - throttle levers
RH 8945	Connector - choke stove pipe
RH 9086	Fitting tool - carburetter piston ball race clip
RH 9096	Fitting tool - 'A' bank mixture adjusting screw tamperproof seal
RH 9097	Fitting tool - 'B' bank mixture adjusting screw tamperproof seal
RH 9105	Kit - to adapt RH 8841 to fit S.U. HIF 7 carburetters

Printed in England

© Rolls-Royce Motors Limited 1979

January 1979

TSD 4200
(Australia
1979 Model Year)

Section U10

Running changes

Printed in England

© Rolls-Royce Motors Limited 1979

January 1979

TSD 4200
(Australia
1979 Model Year)

Chapter U

Emission control systems

Applicable to 1980 model year cars destined for Australia

Section

U1 Introduction
U2 Exhaust emission control system
U3 Fuel evaporative emission control system
U4 Crankcase emission control system
U5 Carburetters and Automatic choke system
U6 Ignition system
U7 Electrical components
U8 Fault diagnosis
U9 Workshop tools
U10 Running changes

Printed in England

© Rolls-Royce Motors Limited 1980

March 1980

TSD 4200
(Australia
1980 Model Year)

Chapter U - 1980 Australia

Issue record sheet 1

July 1980

The dates quoted below refer to the issue date of individual pages within this chapter.

Section	U1	U2	U3	U4	U5	U6	U7	U8	U9	U10
Page No.										
1	Mar 80	Mar 80	Mar 80	Mar 80	Mar 80	Mar 80	Jul 80	Mar 80	Mar 80	Mar 80
2	Mar 80	Mar 80	Mar 80		Mar 80	Mar 80	Jul 80	Mar 80		
3	Mar 80	Mar 80	Mar 80		Mar 80		Mar 80	Mar 80		
4	Mar 80	Mar 80	Mar 80		Mar 80		Mar 80			
5		Mar 80	Mar 80		Mar 80					
6		Mar 80	Mar 80		Mar 80					
7		Mar 80	Mar 80		Mar 80					
8			Mar 80		Mar 80					
9					Mar 80					
10					Mar 80					
11					Mar 80					
12					Mar 80					
13										
14										
15										
16										
17										
18										
19										
20										
21										
22										
23										
24										
25										
26										
27										
28										
29										
30										
31										
32										
33										
34										
35										
36										
37										
38										
39										
40										
41										
42										
43										
44										
45										
46										
47										
48										

Printed in England

© Rolls-Royce Motors Limited 1980

Section U1

Introduction

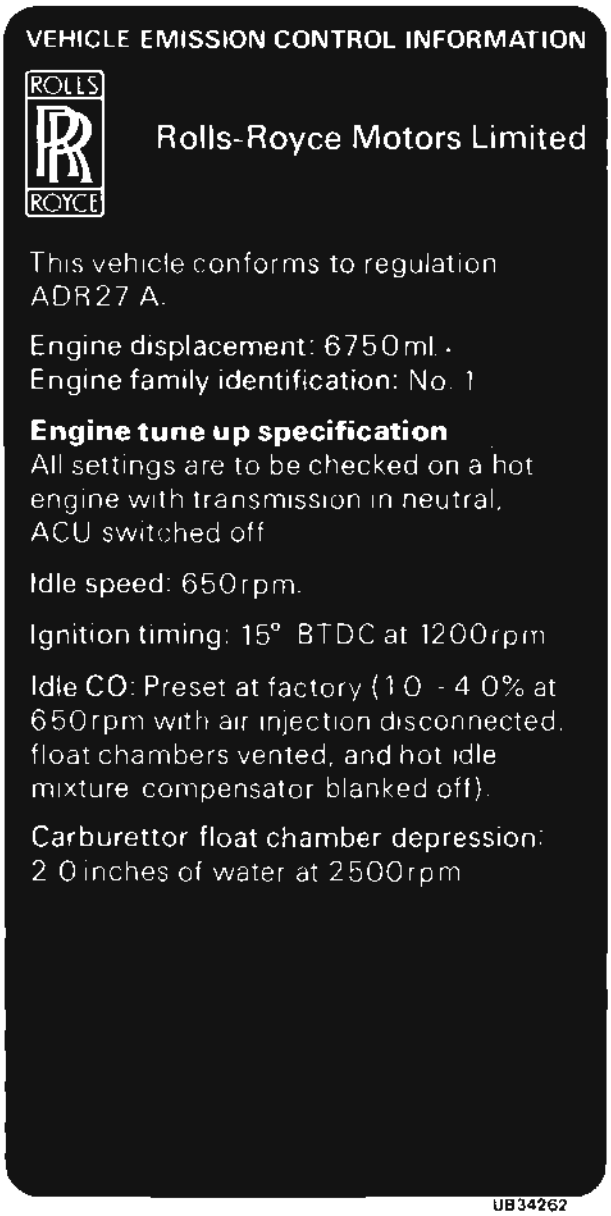

Fig. U1 Emission control certification label

This Chapter has been written specifically for cars fitted with Emission Control Systems conforming to the Australian emission control regulations, applicable to 1980 model year new motor vehicles.

It is important therefore that Service Personnel fully understand the contents of this Chapter so that the special servicing can be correctly carried out.

Rolls-Royce and Bentley motor cars conforming to the above regulations and produced to the 1980 model year specification can be identified as follows.

a Emission Control Certification Label
An Emission Control Certification Label (illustrated) located on the wing valance to the rear of the right-hand front suspension spring cover.

b Car Serial Number
From this number the date of manufacture can be determined.

Engine compartment
Figures U2 and U3 overleaf show the location of the major emission control system components within the engine compartment.

Hose routing diagram
Figure U4 within the Introduction section gives details of the various hose 'runs' and connections in and around the engine compartment, that are associated with the emission control systems components.

Torque tightening
When fitting the various emission control systems components, ensure that the securing nuts and set-screws are tightened to the torque figures given in Chapter P, unless otherwise stated in this Chapter.

Running changes
Before commencing any work on these cars, refer to Section U10.

Printed in England
© Rolls-Royce Motors Limited 1980
March 1980
TSD 4200
(Australia
1980 Model Year)



Fig. U2 Engine compartment details (L.H. side)

1 Air pump
2 Air diverter valve
3 Check valves
4 'A' bank air manifold
5 Weakening and E.G.R. systems cut-out switch



Fig. U3 Engine compartment details (R.H. side)

1 Exhaust gas recirculation valves
2 Exhaust gas recirculation valves signal hose
3 Weakening device assembly
4 Weakening and E.G.R. systems cut-out solenoid
5 Anti 'run-on' solenoid

Printed in England
© Rolls-Royce Motors Limited 1980

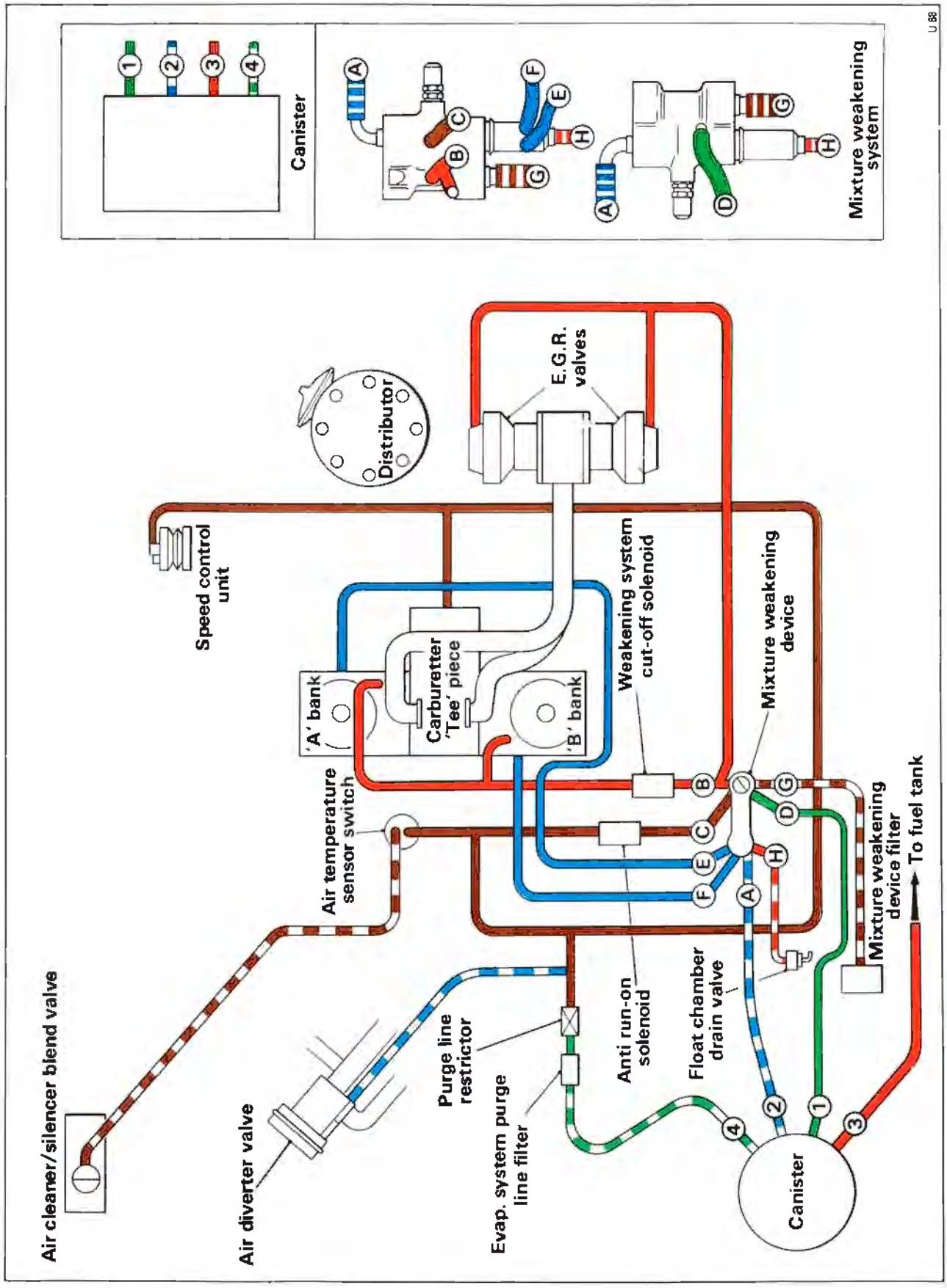

Fig. U4 Hose routing diagram - 1980 model year cars

Section U2

Exhaust emission control system

The Exhaust Emission Control System is designed to reduce the carbon monoxide, hydrocarbon and oxides of nitrogen content in the exhaust gases.

The system does not eliminate the danger caused by inhaling exhaust gases in a confined area.

Air from the atmosphere is drawn into the engine driven air injection pump through a centrifugal filter. From the pump, a quantity of air proportional to engine speed passes through check valves to the air manifolds and then into the exhaust ports. This air combines with the exhaust gases discharged from the combustion chambers and promotes the oxidation process in the exhaust system. The gases then pass through the exhaust system to atmosphere.

In addition, a proportion of the exhaust gas from the exhaust balance pipe situated between the two downtake pipes, is recirculated through vacuum operated metering valves into the carburetter 'tee' piece, just downstream of the throttle plates. The recirculated exhaust gas mixes with the inlet charge of fuel/air mixture in the induction manifold and is distributed to the cylinders, lowering the peak combustion temperature and reducing oxides of nitrogen emissions.

Before commencing work on the exhaust emission control system, care should be taken to ensure that the relevant components are not hot.

The system is illustrated in Figure U5 and comprises the following main components.

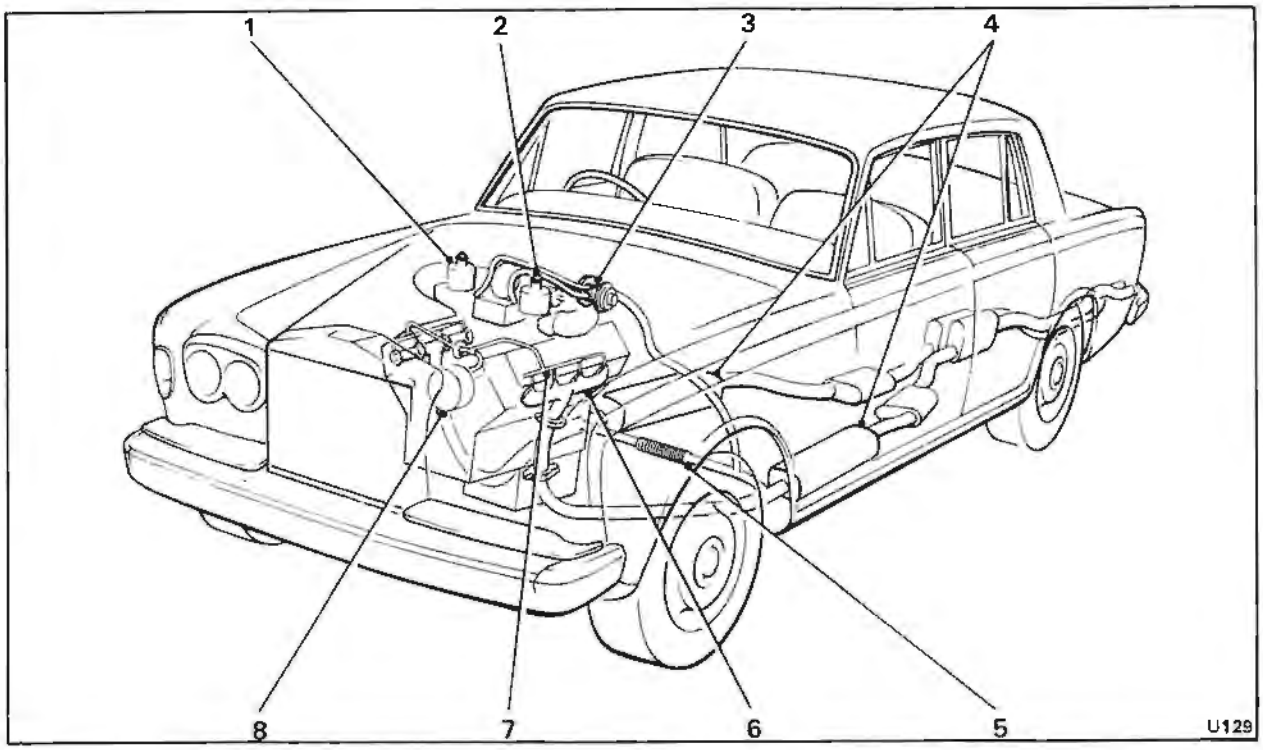

Fig. U5 Exhaust emission control system

1 'A' bank carburetter
2 'B' bank carburetter
3 Exhaust gas recirculation valves
4 Exhaust system front silencers
5 Exhaust system balance pipe
6 'B' bank exhaust manifold
7 'B' bank air manifold
8 Air pump

Printed in England
© Rolls-Royce Motors Limited 1980

March 1980
TSD 4200
(Australia
1980 Model Year)

Air injection system (see Fig. U6)
Air manifolds
Air pump
Check valves
Centrifugal air filter
Air diverter valve

Exhaust gas recirculation system (E.G.R.) (see Fig. U9)
Cut-off solenoid (see Section U7)
Cut-out switch (see Section U7)
Distribution pipes
E.G.R. valves
E.G.R. valves heatshield
Feed pipe
Kickdown and Full throttle E.G.R. cut-out micro-switch (see Section U7)

Exhaust system (see Fig. U5)
(For details of the Exhaust system refer to Chapter Q).

For details of the servicing and maintenance requirements of the Exhaust Emission Control System, refer to the Service Schedules Manual - T.S.D. 4117.

Air injection system (see Figs. U5 and U6)
A detailed description of the air injection system is given at the beginning of this section.

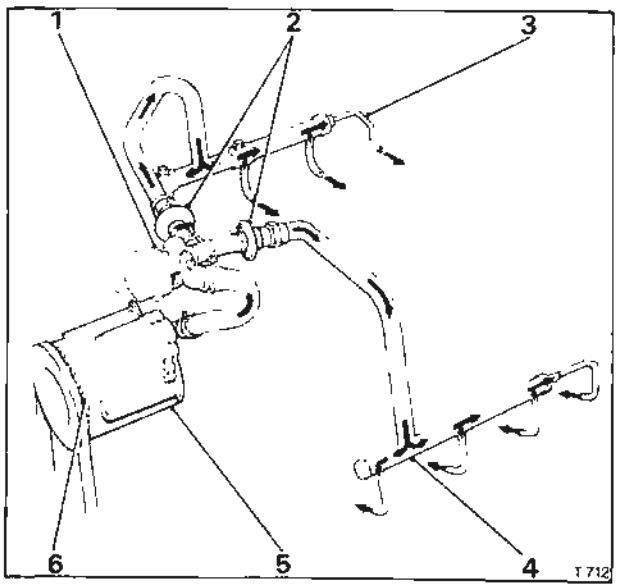

Fig. U6 Air injection system
1 Air diverter valve
2 Check valves
3 'A' bank air manifold
4 'B' bank air manifold
5 Air pump
6 Air pump intake

Air injection system - Leak check
Check the air injection system for air leaks by carrying out the following sequence of operations.
1. Ensure that the ignition is switched off.
2. Visually inspect the condition of all hoses, pipes and joints associated with the air injection system.
3. Ensure that all worm drive clips are tight.
4. Start the engine and listen carefully for any evidence of an air leak from the system.
5. If an air leak is suspected it is permissible to coat the component or hose with a soap solution; soap bubbles will confirm an air leak.

Air injection system - Fault diagnosis
To diagnose malfunctioning of the air injection system refer to Section U8 - Fault diagnosis.

Air manifolds
The air manifolds convey air from the check valves to the engine exhaust ports. One air manifold is fitted to each bank of cylinders and is identified as 'A' bank air manifold or 'B' bank air manifold.

To remove an air manifold, unscrew the check valve union and the four ¾ in. A/F adapters in the cylinder head.

The 'A' bank air manifold is reasonably straight forward to withdraw but 'B' bank air manifold will require the disconnecting of several other hoses and pipes (e.g. choke stove pipes, fuel evaporative weakening device hoses and pipes, etc.), to facilitate withdrawal.

Fit the air manifolds by reversing the procedure given for removal, noting that the check valve union has a tapered thread. All the adapters in the cylinder heads should be torque tightened to the figures given in Chapter P.

Air pump
The air pump is of the rotary vane type and is belt driven from the engine coolant pump. The centrifugal air filter is an integral part of the pump and is situated between the pump body and the pump driving pulley.

Air pump - To remove (see Fig. U7)
1. Disconnect the battery (refer to Chapter M).
2. Unscrew the worm drive clip and detach the hose from the pump to the air diverter valve, at the pump. Blank off the hose and pump connections to prevent the ingress of dirt, etc.
3. Slacken the two $^{9}/_{16}$ in. A/F setscrews on the drive belt adjustment strut; remove the upper bolt.
4. Remove the drive belt from the pulley.
5. Support the air injection pump and unscrew and remove the $^{9}/_{16}$ in. A/F mounting setscrew situated on the opposite side of the pump pulley.

Air pump - To fit
Fit the air pump by reversing the procedure for

removal noting the following.
1. Ensure that the driving belt is adjusted so that an applied force of 5,5 kg. (12 lb.) mid-way between the air injection pump pulley and the coolant pump pulley causes the belt to deflect 9,5 mm. (0.375 in.).

Air pump pulley.
1. To remove, unscrew and remove the three set-screws situated around the centre of the pulley. Withdraw the pulley.
2. To fit the pulley, reverse the procedure given for removal ensuring that the setscrews are torque tightened to the correct figure (see Chapter P).

Check valves
The check valves are non-return valves (one-way valves) and one is fitted into the air injection system between the air pump and the air manifolds, for each bank of cylinders.

The check valves prevent the backflow of exhaust gases into the air lines or air pump, they operate whenever the exhaust back pressure exceeds the air pump delivery pressure at high speed and/or in the case of air pump drive belt failure.

To remove a check valve, slacken the worm drive clip situated on the air pump to check valve hose. Unscrew the union from the air manifold and withdraw the check valve. Fit a check valve in the reverse order.

Air diverter valve (see Fig. U8)
The diverter valve performs an important function in addition to housing the pressure relief valve for the air pump.

Backfire protection
Following rapid throttle closure, the inlet manifold pressure drops suddenly causing fuel to be vapourised from the manifold walls which results in a mixture too rich to burn in the cylinders. This mixture combined with the air injected into the exhaust ports could cause backfiring.

To prevent backfiring the diverter valve, triggered by manifold depression, diverts the injected air from the exhaust ports for a short period of time.

Air diverter valve - To check
The air diverter valve is a non-serviceable component. If the operation of the component is suspect, the following check should be carried out before it is replaced.
1. Ensure that the parking brake is firmly applied and the vehicle is in 'Park'.
2. Start and run the engine at 2 000 r.p.m.
3. Ensure that **air does not escape** from the air diverter valve exhaust ports situated around the body of the air diverter valve.
4. If air does escape from the air diverter valve exhaust ports, check the pressure relief valve within the assembly as follows.
5. Blank off the two connections to the check valves

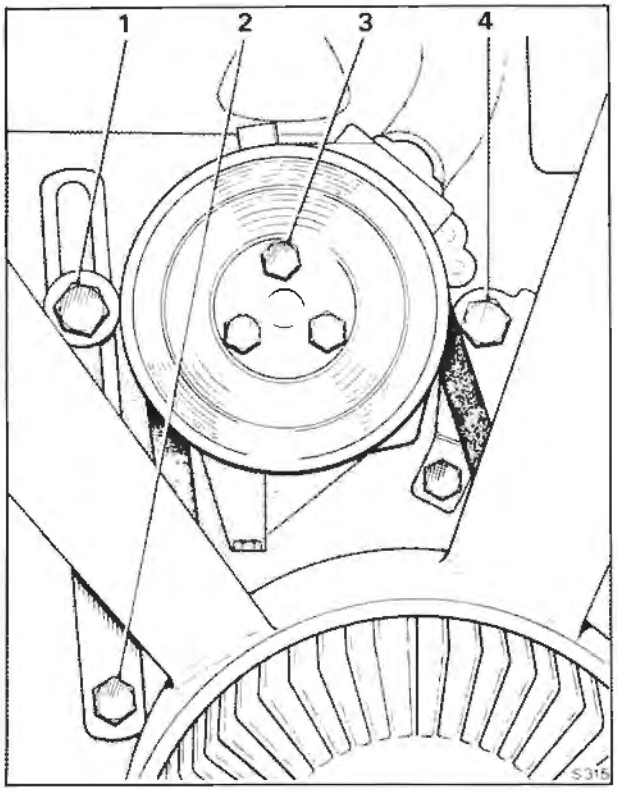

Fig. U7 Air injection pump
1 Adjustment strut upper setscrew
2 Adjustment strut pivot setscrew
3 Pulley retaining setscrews
4 Air pump mounting setscrew



Fig. U8 Air diverter valve assembly
1 Air diverter valve

Printed in England
© Rolls-Royce Motors Limited 1980

6. Apply air pressure to the air diverter valve via the air pump connection.
7. Ensure that the pressure relief valve works within the acceptable limits quoted.
0,5 kgf/sq.cm. to 0,6 kgf/sq.cm.
(7.4 lbf/sq.in. to 8.4 lbf/sq.in.).

Air diverter valve - To remove and fit
1. Unscrew the three worm drive clips which secure the three larger diameter rubber hoses to the air diverter valve and withdraw the hoses.
2. Withdraw the smaller diameter rubber hose from the air diverter valve.
3. Using a 7/16 in. A/F spanner unscrew and remove the nut securing the air diverter valve to the support bracket. Collect the washer.
4. Hold the diverter valve and withdraw the bolt; remove the diverter valve.
5. Fit the diverter valve by reversing the procedure.

Exhaust gas recirculation system (E.G.R.)
(see Figs. U5 and U9)
A detailed description of the exhaust gas recirculation system (E.G.R.) is given at the beginning of this section.

Distribution pipes
The distribution pipes convey the recirculated exhaust gas from the E.G.R. valves nto the carburetter 'tee' piece.

Distribution pipes - To remove
1. Using a 7/16 in. A/F spanner unscrew and remove the two nuts and washers securing the distribution pipes to the E.G.R. valve mounting block.
2. Unscrew the 7/16 in. A/F setscrews retaining the heatshield to 'B' bank air horn; collect the washers.
3. Ease the mounting block rearward to free the joint face; discard the gasket.
4. Support the weight of the distribution pipes.
5. Unscrew and remove the four 2 B.A. setscrews and washers securing the two distribution pipe flanges to the carburetter 'tee' piece.
6. Withdraw the distribution pipes and discard the gaskets.

Distribution pipes - To fit
Fit the distribution pipes by reversing the procedure given for removal, noting the following points.
1. Ensure that all joint faces are clean and free from carbon deposits.
2. Coat the joint faces and gaskets at the carburetter 'tee' piece with 'Wellseal'.

Distribution pipes - To clean
1. Remove the distribution pipes as described in Distribution pipes - To remove.

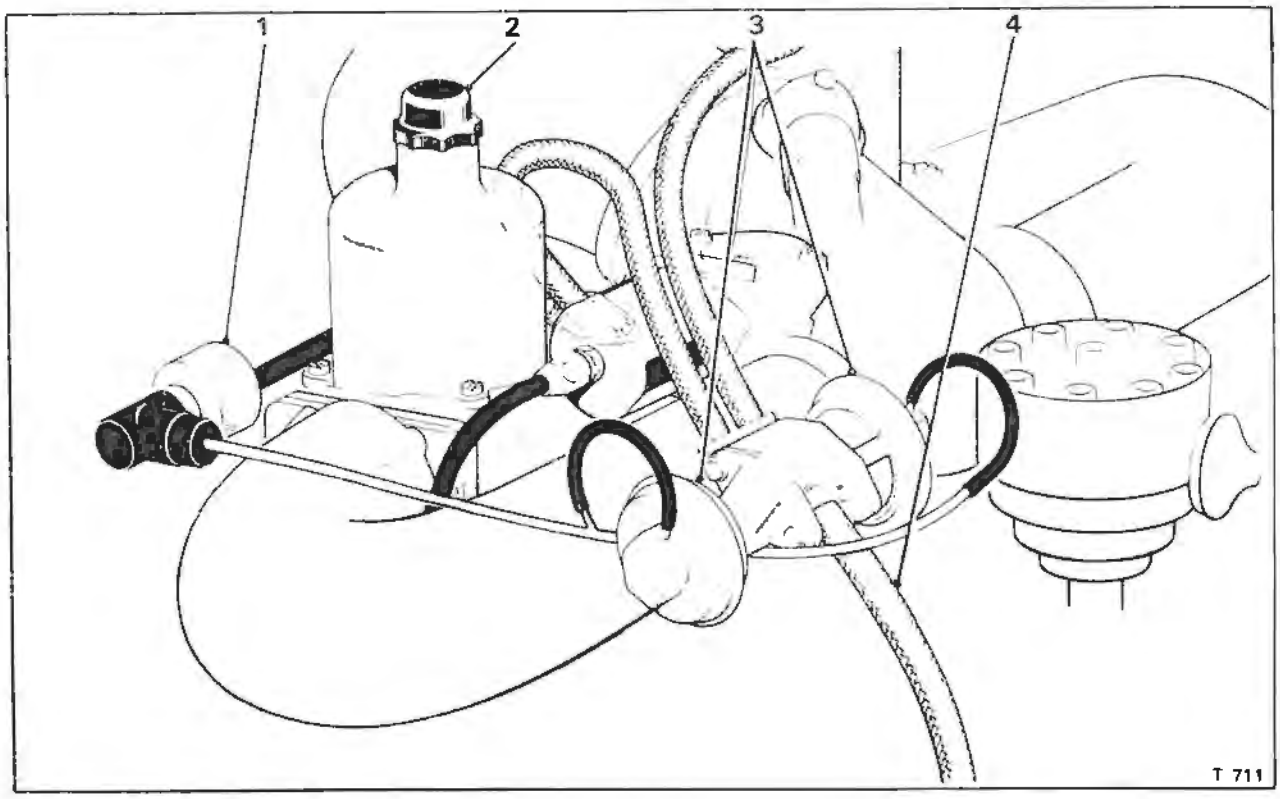

Fig. U9 Exhaust gas recirculation system
1 E.G.R. cut-off solenoid
2 'B' bank carburetter
3 E.G.R. valves
4 E.G.R. feed pipe

2. With a pointed scraper clean as much carbon deposit as possible from inside the distribution pipes and the joint faces. Particular attention should be given to the carburetter end of the pipes, because the majority of the carbon deposit will be found in this area.
3. Using wire brushes complete the cleaning operation on the distribution pipes.
4. With a pointed scraper remove the carbon deposits from the carburetter 'tee' piece connection orifices.
5. Before fitting the distribution pipes thoroughly blow-out the pipes and carburetter 'tee' piece connections with compressed air.
6. Fit the distribution pipes as described in Distribution pipes - To fit.

E.G.R. valves (see Fig. U10)
A proportional flow recirculation system is used. Exhaust gas from the balance pipe between the two downtakes of the dual exhaust system passes through twin metering orifices and is recirculated into the carburetter 'tee' piece. Atmospheric pressure is maintained downstream of the metering orifices by means of the control valves so that the recirculation flow is proportional to the relative effective areas of the metering orifices and the main exhaust system.

Dilution of the inlet charge with exhaust gas lowers the peak combustion temperature and reduces the formation of oxides of nitrogen.

Twin vacuum operated control valves each with an integral pressure transducer are used and the metering orifice of each valve is incorporated in an extension of the valve seat. A carburetter throttle gated vacuum signal is used to operate the valve. This signal is modulated by the integral transducer valve and applied to the control valve diaphragm so that the control valve lift is adjusted to maintain a constant control pressure, just above atmospheric pressure between the metering orifice and the control valve seat.

When the engine load is increased, the control pressure exceeds the transducer valve setting and the transducer valve closes applying the full vacuum signal to the control valve diaphragm and thus opening the control valve and increasing the E.G.R. flow. Similarly, as the engine load is reduced, the control pressure becomes less than the transducer valve setting and the transducer valve opens, venting the diaphragm chamber to atmosphere and causing the control valve to close and reduce the E.G.R flow. The transducer valve constantly cycles adjusting the control valve lift to maintain a constant control pressure under all normal operating conditions.

The use of a throttle gated vacuum signal ensures complete control valve closure at idle to maintain good idle quality.

To improve starting and drive-away under low temperature conditions a solenoid valve (see

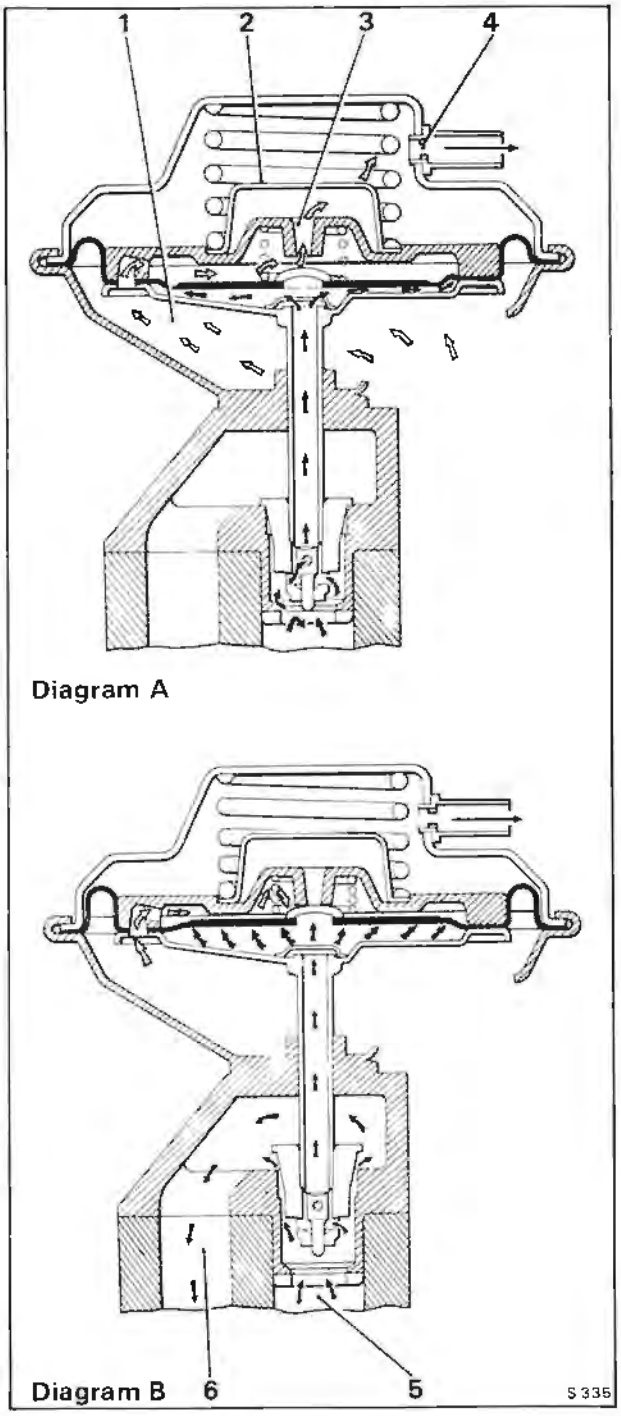

Fig. U10 Exhaust gas recirculation valve
Ambient air ⇦
Exhaust gas ⬅

Diagram A - Exhaust pressure below operating value
1 Ambient air
2 Air filter
3 Air bleed
4 Restrictor

Diagram B - Exhaust pressure above operating value
5 Exhaust gas from balance pipe
6 Exhaust gas to carburetter 'tee' piece

Printed in England
© Rolls-Royce Motors Limited 1980
March 1980
TSD 4200
(Australia
1980 Model Year)

Section U7) interrupts the carburetter vacuum signal to the E.G.R. valves until a predetermined temperature is reached.

A micro-switch operated by the accelerator pedal (see Section U7) also controls this solenoid to provide E.G.R. cut-out at full throttle. At high engine speed the exhaust gas back pressure is high. As a result, the integral transducer valve directs full carburetter vacuum signal to the control valves. At high engine speed under full throttle operation the air intake restriction is sufficient to produce a carburetter vacuum signal large enough to open the control valves, this results in excessive flow under these conditions which would seriously degrade performance and reduce the safety margin for overtaking.

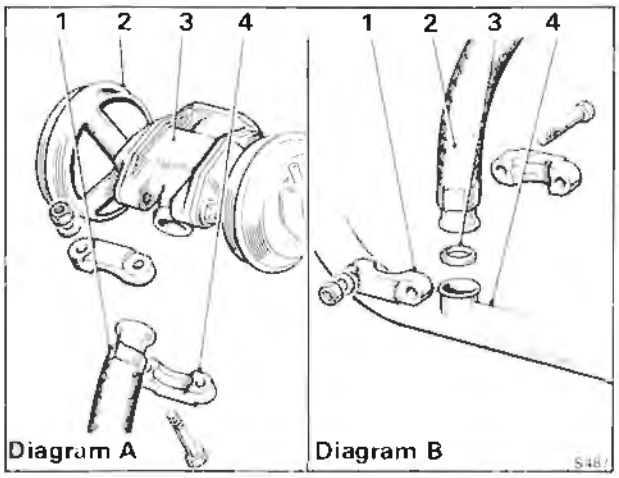

Fig. U11 E.G.R. feed pipe joints
Diagram A - Upper joint
1 Feed pipe
2 E.G.R. valve
3 E.G.R. valve mounting block
4 Clamp bracket

Diagram B - Lower joint
1 Clamp bracket
2 Feed pipe
3 Sealing ring
4 Exhaust balance pipe

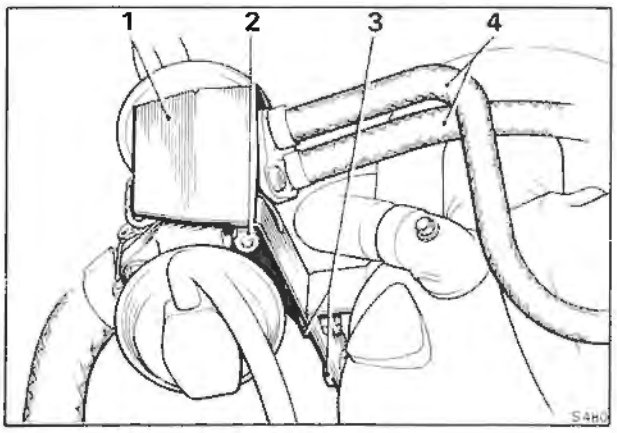

Fig. U12 E.G.R. heatshield
1 Heatshield
2 Retaining nut
3 Retaining screws
4 Distribution pipes

E.G.R. valves - To remove
1. Detach the small diameter rubber hose from the valve.
2. Unscrew and remove the two ½ in. A/F nuts retaining the valve to the mounting flange; collect the two washers.
3. Withdraw the valve and remove the gasket from the mounting flange.
4. Repeat Operations 1 to 3 inclusive on the second valve.

E.G.R. valves - To fit
Fit the valves by reversing the procedure for removal, noting the following points.
1. Ensure that the valve pintle (see Fig. U10) is secure on the valve stem.
2. Ensure that the valve and mounting flange joint faces are clean and free from carbon deposits.
3. Always use a new mounting flange gasket.

E.G.R. valves - To clean
1. Remove the valves as described in E.G.R. valves - To remove.
2. Using a scraper, remove all carbon film from the valve and mounting flange faces; complete the operation with a wire brush.
3. Clean the carbon from the valves using a wire brush fitted into a portable drill. Take care not to damage the valve seating area.
4. Thoroughly blow out the valves with compressed air to ensure that all loose carbon particles are removed.
5. Upon completion of the cleaning operations, fit the valves to the engine mounting flange as described in E.G.R. valves - To fit.

E.G.R. valves - To check
The E.G.R. system is automatically controlled by exhaust backpressure to maintain a constant E.G.R. proportion over normal road load conditions. Checks to ensure the correct operation of the valves are only required under no load conditions as follows.
1. Connect an electric impulse tachometer to the engine in accordance with the manufacturer's instructions.
2. Ensure that the parking brake is firmly applied and that the gear range selector is in the 'Park' position.
3. Ensure that the pressure tapping cap fitted to the weakening device is correctly tightened.

Start and run the engine until normal operating temperature is attained.

4. Ensure that the engine has run for at least 25 mins. after the engine coolant thermostat has opened.
5. Allow the engine to return to the idle speed.
6. Increase the engine speed slowly noting the operation of the E.G.R. valves.
7. The E.G.R. valves should commence to open between 800 r.p.m. and 1 000 r.p.m.

If the valves either fail to open or open late check for the following possible causes.
a. Failed E.G.R. cut-out switch (see Section U7).
b. Failed E.G.R. cut-off solenoid (see Section U7).
c. Failed E.G.R. full throttle cut-out micro-switch (see Section U7).
d. Leak or blockage in the carburetter signal pipe to weakening device cut-off solenoid.
e. Leak or blockage in the E.G.R. valve signal pipe or hose from the E.G.R. cut-out solenoid to the E.G.R. valves.
f. Advanced ignition timing (see Section U6).

If the valves begin to open early check for the following possible cause.
a. Retarded ignition timing (see Section U6).
8. If the E.G.R. valves do not function correctly after carrying out Operations 1 to 7 inclusive, replace the offending valve(s) with new units.
9. Carry out Operations 1 to 7 inclusive.

E.G.R. feed pipe (see Fig. U5)
The E.G.R. feed pipe conveys exhaust gas that is to be recirculated from the exhaust balance pipe to the exhaust gas recirculation valves.

E.G.R. feed pipe - To remove
1. Unscrew the two 7/16 in. A/F nuts from the clamp at the upper end of the feed pipe (see Fig. U11).
2. Collect the two washers and 'split' the clamp from the spherical joint.
3. Repeat Operations 1 and 2 on the lower joint adjacent to the exhaust system balance pipe. Collect the sealing ring.

E.G.R. feed pipe - To fit
Fit the E.G.R. feed pipe by reversing the procedure given for removal, noting the following.
1. Ensure that the joint faces are clean and free from carbon deposits.

E.G.R. valves heatshield - To remove (see Fig. U12)
1. Slacken the two forward ½ in. A/F nuts one on either side of the mounting flange.
2. Unscrew and remove the two 7/16 in. A/F set-screws retaining the heatshield to the rear of 'B' bank air horn, collect the washers.
3. Ease the assembly forward to release the heatshield slots from the retaining studs.
4. Withdraw the heatshield.

E.G.R. valves heatshield - To fit
Fit the heatshield by reversing the procedure given for removal.

Printed in England
© Rolls-Royce Motors Limited 1980

Section U3

Fuel evaporative emission control system

The Fuel Evaporative Emission Control System eliminates direct venting of the fuel system, thus preventing the release of hydrocarbons into the atmosphere.

Vapour from the fuel system is collected and stored in a charcoal filled canister. The canister is purged whenever the engine is running and the stored fuel vapour is extracted from the charcoal and burnt in the engine.

The system is illustrated in Figure U13 and comprises the following main components.

Canister (see Fig. U14)
Carbon granules (charcoal)
Float chamber connection
Fuel tank connection
Polyurethane air filter
Purge line connection
Weakening device connection

Fuel tank (see Fig. U16)
Combined pressure/vacuum relief valve
Expansion tank
Fuel trap assembly

Purge line (see Fig. U13)
Air filter
Restrictor

Weakening device (see Figs. U18 and U19)
Adjustable orifice
Air filter
Anti 'run-on' solenoid
Cut-off solenoid
Cut-out switch
Float chamber drain valve
Float chamber vent valve
Fuel receiver chamber
Non-return valves
Venturi chamber

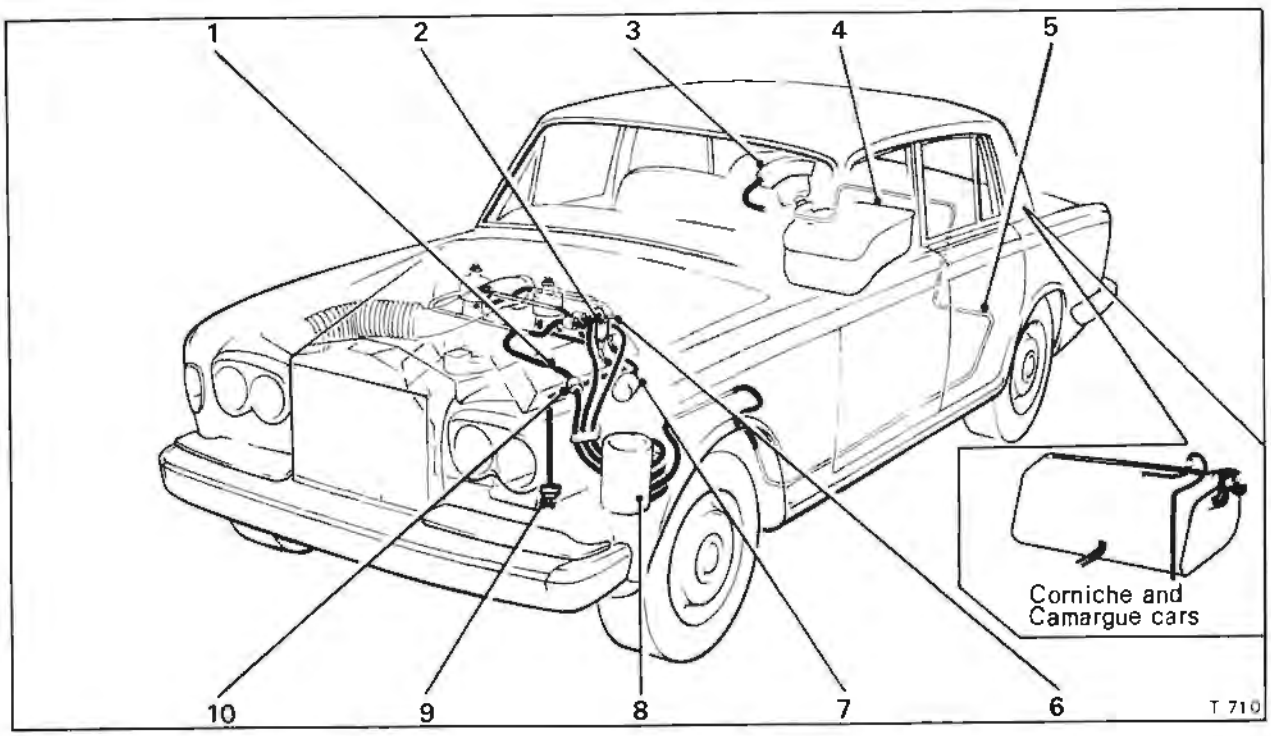

Fig. U13 Fuel evaporative emission control system

1 Purge line restrictor
2 Float chamber vent valve
3 Fuel trap assembly
4 Fuel tank
5 Fuel vapour line
6 Weakening device
7 Weakening device filter
8 Evaporative loss control canister
9 Float chamber drain valve
10 Purge line filter

Printed in England
© Rolls-Royce Motors Limited 1980

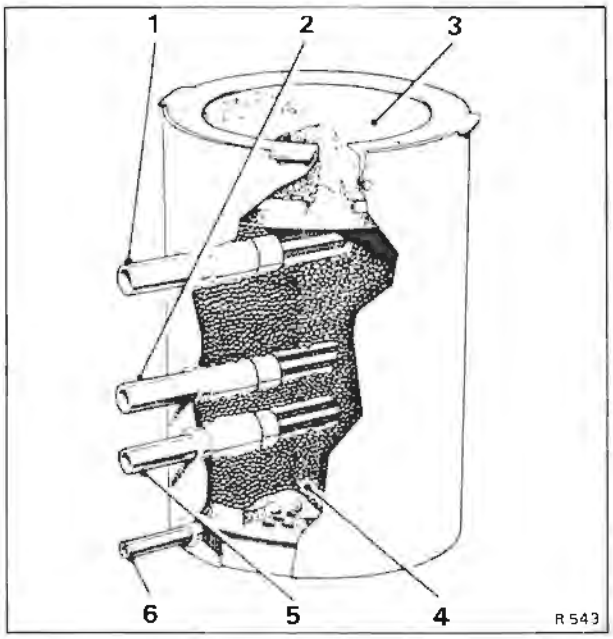

Fig. U14 Control canister
1 Weakening device connection
2 Float chamber vent connection
3 Polyurethane filter
4 Carbon
5 Fuel tank vent connection
6 Purge line connection

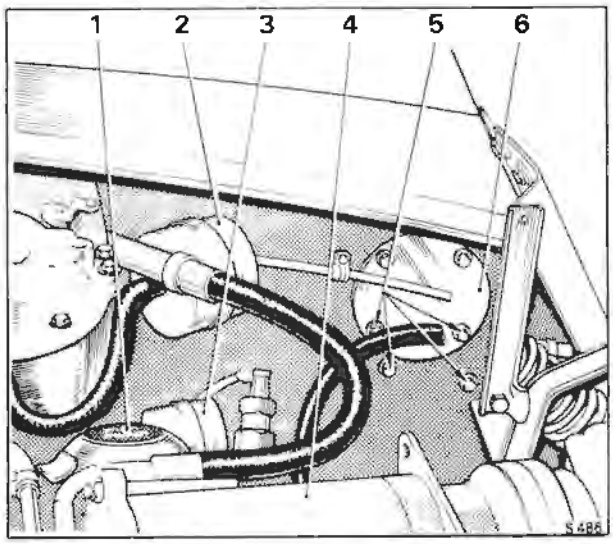

Fig. U15 Foam filter access cover, purge line filter and weakening device filter
1 Engine oil filler cap
2 Weakening device filter
3 Purge line filter
4 Refrigeration compressor
5 Canister securing setscrews
6 Foam filter access cover

For details of the servicing and maintenance requirements of the Fuel Evaporative Emission Control System, refer to the Service Schedules Manual - T.S.D. 4117.

Control canister (see Figs. U13 and U14)
The evaporative emission control canister is situated under the left-hand front wing. It is a cylindrical container filled with activated carbon granules which absorb and retain fuel vapour. There are connections for the mixture weakening device vent, the fuel receiver vent, the fuel tank vent and the purge line. The top of the canister is open to atmosphere and contains a Polyurethane foam filter element.

When the engine is running air is drawn from the atmosphere through the foam filter element and carbon granules to the lowest connection on the canister. The air, containing fuel vapour from the carbon granules then passes into the engine via the purge line.

Control canister - To remove
1. Remove the front left-hand road wheel as described in Chapter R.

Note
Left-hand is determined when viewed from the driver's seat.

2. Remove the front section of the underwing sheet by unscrewing the small screws situated around the outer edge of the sheet. Resistance may be experienced when the sheet is being freed, as it is sealed around the edge with a suitable compound (i.e. Bostik Seelastik).
3. The canister will be clearly visible towards the front of the vehicle.
4. Using the special pliers (RH 8090), remove the steel retaining clips from the four hose connections to the canister. Label the hoses to facilitate identification and withdraw the four hoses from the canister.
5. Raise the bonnet and from inside the engine compertment locate the canister foam filter access cover (see Fig. U15).
6. Unscrew and remove the four setscrews indicated as securing setscrews in Figure U15. Before removing the final setscrew support the control canister.
7. Withdraw the canister from beneath the wing.

Control canister - To fit
Fit the canister by reversing the procedure described for removal, noting the following points.
1. Ensure that the rubber hoses are in a good condition and new hose retaining clips are fitted.
2. Ensure that the underwing sheet is sealed with a suitable compound (i.e. Bostik Seelastik).

Polyurethane foam filter element - To renew
It is not necessary to remove the canister from the car in order to extract the polyurethane foam filter element. A detachable cover is situated in the left-hand valance (see Fig. U15).

1. Unscrew the four screws retaining the access cover, lift off the cover and withdraw the filter element from the top of the canister.

When fitting a new element, ensure that it is correctly positioned inside the retaining rim of the canister. Fit the access cover and tighten the setscrews.

Fuel tank (see Fig. U16)
On Silver Shadow II, Silver Wraith II and Bentley T2 cars the fuel tank is vented from three positions to the fuel trap assembly which is mounted above the fuel filler. One vent is from the fuel filler neck and the others are from the fuel tank.

The three vent lines join at a common junction block situated adjacent to the fuel filler neck, the main vent line then passes to the fuel trap assembly.

From the fuel trap a vent line passes under the floor of the car to the evaporative loss control canister.

The fuel trap assembly acts as a liquid separator and prevents liquid fuel from being transferred to the evaporative loss control canister under severe driving manoeuvres, when the fuel tank is full or during expansion of the fuel at high ambient temperatures.

A combined relief and vacuum valve fitted into the end of the fuel trap assembly prevents an excessive pressure 'build up' in the fuel tank due to vaporisation or depression (as fuel is consumed), in the event of a blockage in the vent line to the evaporative loss control canister.

Included in the main fuel tank is a small expansion tank (see Fig. U16) of 3,125 litres (5.5 Imp.pt. - 6.7 U.S. pints) capacity. The expansion tank inhibits complete filling of the main fuel tank and provides additional fuel expansion volume to contend with extreme temperature conditions.

When the car is being filled with fuel, the main fuel tank (without an expansion tank) could normally be completely filled, leaving only the filler neck,

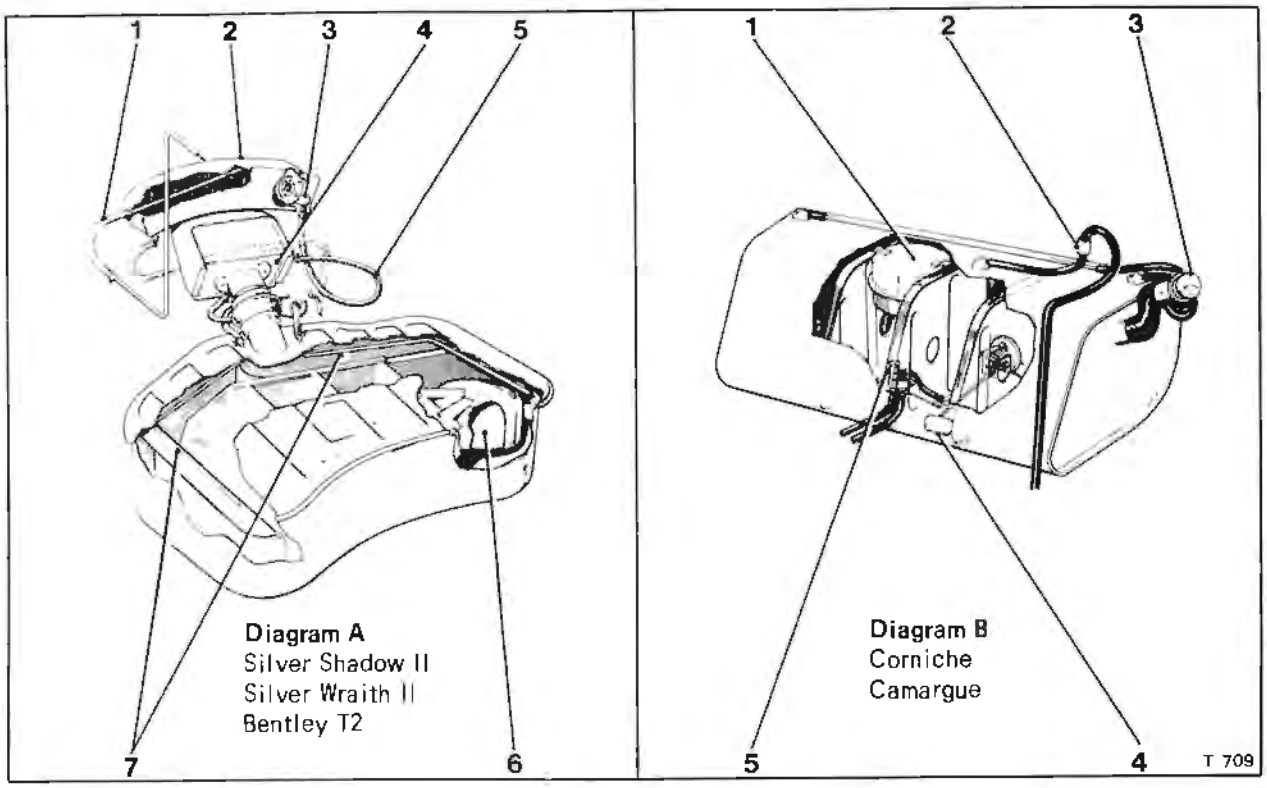

Fig. U16 Fuel evaporative emission control system - fuel tank assembly

1 Fuel vapour line
2 Fuel trap assembly
3 Combined relief and vacuum valve
4 Fuel filler box
5 Relief valve vent
6 Expansion tank and overfill limiter
7 Vent pipes

1 Expansion tank and overfill limiter
2 Rollover valve
3 Fuel filler cap (incorporating combined relief and vacuum valve)
4 Fuel tank float
5 Nylon 'in tank' filter

Printed in England
© Rolls-Royce Motors Limited 1980
March 1980
TSD 4200
(Australia
1980 Model Year)

vent connector pipes and fuel trap assembly to accommodate the expansion of the fuel. An expansion tank is therefore situated in the upper part of the main fuel tank and as the fuel level rises above the lower part of the assembly it flows inside through two small holes in the base. Two additional holes in the top of the expansion tank allow air to escape.

On Corniche and Camargue cars the fuel tank is vented via two connections to the filler neck allowing adequate venting of the tank during filling. A separate vapour line passes via a rollover valve from the tank, under the floor on the left-hand side of the car, to the evaporative loss control canister. The rollover valve prevents liquid fuel from entering the evaporative emission control canister during harsh manoeuvres or in the event of vehicle rollover. Fuel vapours pass freely through the valve. The fuel tank is illustrated in Figure U16.

In the event of a blockage in the vapour line to the evaporative loss control canister, a combined pressure and vacuum relief valve in the fuel filler cap prevents an excessive pressure 'build up' in the fuel tank due to fuel vaporisation or depression, as the fuel is consumed.

An expansion tank situated within the main fuel tank inhibits complete filling and provides fuel expansion volume to cope with extreme temperature conditions.

For all other details of the fuel tanks refer to Chapter K

Fuel evaporative emission control system - To leak check

Whenever the various pipes, hoses and components of the fuel evaporative emission control system are disturbed, the system should be checked for air leaks upon assembly.

To test the system proceed as follows.

1. Position the vehicle on a ramp and carry out the usual safety precautions (i.e. ensure that the gear range selector lever is in 'Park' position, the parking brake firmly applied, the engine switched off, etc.,). Raise the ramp.
2. Remove the left-hand horn assembly (left-hand is decided when standing under the vehicle, looking towards the front), see Chapter M.
3. Through the resultant gap between the front wing and wing sheet, locate the emission control canister and identify the hose connection from the fuel tank (second from the bottom).
4. Using the special pliers (RH 8090), remove the steel retaining clip from the fuel tank connection hose at the control canister.
5. The fuel tank hose should be detached from the canister and connected to the test equipment (see Fig. U17).
6. Apply air pressure to the fuel tank hose via the test equipment until a reading of 38 cm. (15 in.) H_2O is attained and close the pressure supply.
7. After 5 minutes again check the pressure reading, this should not have fallen by more than 12,7 mm. (0.5 in.).
8. If the pressure drop is more than 12,7 mm. (0.5 in.), progressively treat all joints in the system with soap solution to detect air leaks.
9. Rectify any air leaks and again leak check the system.
10. When the system is satisfactory, detach the test equipment and connect the hose to the control canister, secure with a new steel retaining clip.
11. Fit the left-hand horn assembly as described in Chapter M.

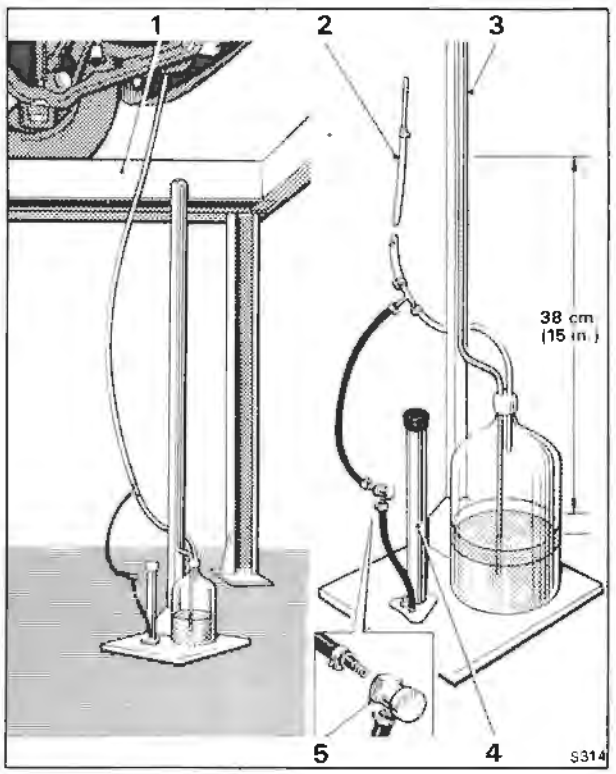

Fig. U17 Leak check test equipment

1 Ramp
2 Connection to fuel tank/canister hose
3 Test equipment
4 Pump
5 One-way pressure valve

Purge line

The purge line consists of a rubber hose, passing from the lowest connection on the canister through the valance junction piece to the induction manifold connection on the opposite side of the engine (see Fig. U13). Incorporated into this hose is the purge line filter and restrictor.

When the engine is running, air drawn through the canister filter and carbon picks up the stored fuel vapours and passes them via the hoses, to the

induction system at a point just below the choke housing. The restrictor in the line controls the flow rate at between 1,41cu.m. per/hr. and 1,98 cu.m. per/hr. (50 cu.ft. per/hr. and 70 cu.ft. per/hr.) to maintain carburetter metering accuracy and the paper element line filter is fitted to prevent blockage of the restrictor.

Purge line filter

The purge line filter is situated on the left-hand valance just forward of the front road spring pot (see Fig. U15). The air filter assembly is a sealed unit and no attempt should be made to clean the element.

At the mileage intervals specified in the Service Schedules the purge line filter should be removed and a new assembly fitted as follows.

Purge line filter - To remove

1. Using the special pliers (RH 8090) remove the two steel retaining clips situated one on either side of the filter assembly
2. Detach the inlet and outlet hoses.
3. Slacken the small setscrew that secures the clamp bracket around the filter assembly.
4. Swivel the clamp bracket to enable the filter assembly to be withdrawn.

Purge line filter - To fit

Fit the purge line filter by reversing the procedure given for removal, noting the following points.

1. Ensure that the filter assembly is fitted the correct way around; the word 'IN' moulded into the end of the casing should be towards the front of the vehicle.
2. Ensure that the rubber hoses are in a good condition and that new hose retaining clips are used.

Purge line restrictor

The purge line restrictor is situated in the purge line between the air filter and the induction manifold connection (see Fig. U13). The function of the restrictor is to maintain the air flow through the purge line within predetermined limits.

Purge line restrictor - To remove

1. Hold the restrictor firmly and slide the rubber hosing from both ends.

Purge line restrictor - To fit

Fit the restrictor by reversing the procedure given for removal, noting the following point.

1. Ensure that the purge line restrictor is fitted into the line correctly. This can be determined by comparing the diameters of the restrictor ends with those of the rubber hoses.

Purge flow rate - To check

1. Disconnect the hose from the engine side of the purge line filter and insert a flowmeter assembly (RH 8725) into the line between the filter and the restrictor. The flowmeter is a rotameter type capable of measuring between 1,4 cu.m/hr. and 2,0 cu.m/hr. (50 cu.ft/hr. and 70 cu.ft/hr.). The pressure drop across the meter must not exceed 5,08 cm. Hg. (2.0 in.Hg.).
2. Start and run the engine at 650 r.p.m.; the reading on the flowmeter should be between 1,41 cu.m/hr. and 1,99 cu.m/hr. (50 cu.ft/hr. and 70 cu.ft/hr.).
3. If the flow is less than the minimum figure quoted in Operation 2, stop the engine and substitute the purge line restrictor with a straight piece of metal pipe having an internal diameter larger than 4,76 mm. (0.187 in.).
4. Start and run the engine at 650 r.p.m.; the reading on the flowmeter should be in excess of 1,99 cu.m/hr. (70 cu.ft/hr.).

5a. If the flowmeter reading is above 1,99 cu.m/hr. (70 cu.ft/hr.) fit a new purge line restrictor and repeat Operation 2.

b. If the flowmeter reading is below 1,99 cu.m/hr. (70 cu.ft/hr.) the cause could be as follows.

(i) An air leak in any of the vacuum hoses that connect to the induction manifold connection (vacuum manifold).

(ii) A blockage in the vacuum manifold or any of the connecting hoses.

Any leaks or blockages should be rectified; the restrictor should be fitted and Operation 2 repeated. If the flow rate is still incorrect fit a new restrictor and again, repeat Operation 2.

6. Remove the test equipment and connect the hose to the purge line filter.

Weakening device

The mixture weakening device (see Fig. U18) is fitted adjacent to 'B' bank carburetter and incorporates a fuel receiver.

For any given position of the fuel metering needle, the rate of the discharge from the carburetters is governed by the difference in air pressure existing over the fuel in the float chamber and that over the jet.

The weakening device is designed to reduce the air pressure (create a depression) in the float chamber at part throttle, thereby reducing the rate of discharge from the jet.

The weakening device housing contains two chambers (see Fig. U19), the venturi chamber and the fuel receiver chamber, the two being interconnected by a passage and an adjustable venturi.

The venturi chamber is connected to a small drilling on the edge of the butterfly plates of both carburetters via the weakening device solenoid valve, with the throttle slightly open the drillings are subjected to manifold depression thus creating a depression in the venturi chamber which draws air from the weakening device air filter. This

Printed in England
© Rolls-Royce Motors Limited 1980
March 1980
TSD 4200
(Australia
1980 Model Year)

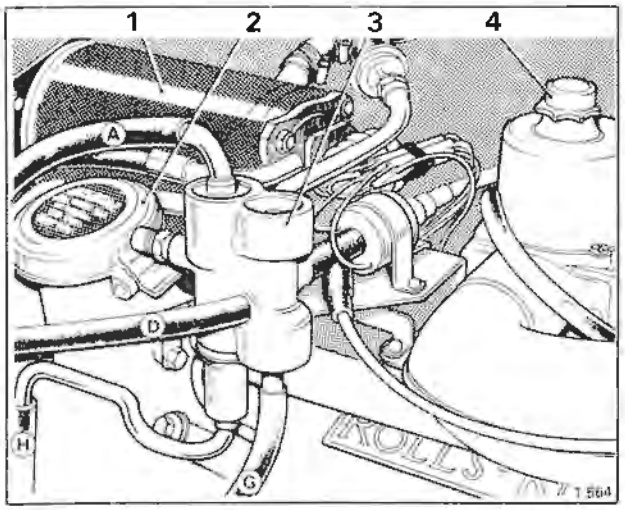

Fig. U18 Position of mixture weakening device
1 Refrigeration compressor
2 Engine oil filler
3 Mixture weakening device
4 'B' bank carburetter

depression is also apparent in the fuel receiver chamber and subsequently in the carburetter float chambers.

The value of the depression is set by the position of the weakening device adjusting screw.

To obtain adequate float chamber venting to cope with hot soak conditions there is an additional vent from the fuel receiver. This incorporates a low pressure non-return valve to maintain float chamber depression under normal running conditions. In addition to this valve, a one-way valve is fitted into the venturi chamber to prevent any evaporating fuel being discharged to atmosphere

A float chamber drain, also incorporating a low pressure non-return valve is mounted at the front of the engine adjacent to the oil filter, this valve is connected to the fuel receiver. Should flooding occur the head of fuel in the receiver is sufficient to open the drain valve thus preventing engine stalling if the float chamber needle valves stick

Weakening device - To remove
1. Label all hoses connected to the weakening device assembly, this will facilitate assembly.
2. Disconnect all hoses to the weakening device.
3. Unscrew and remove the two small setscrews that retain the weakening device to the solenoid platform; the two screws are situated just below the pipe/hose connections for the anti 'run-on' solenoid and weakening device cut-off solenoid.
4. Withdraw the weakening device.

Weakening device - To fit
Fit the weakening device by reversing the procedure given for removal, noting the following point.
1. Ensure that all hoses connecting to the assembly are in a good condition and that all connections are 'air tight'.

Weakening device - To dismantle (see Fig. U19)
1. Remove the weakening device from the vehicle.
2. Remove the small screw that secures the fuel receiver assembly into the base of the weakening device, withdraw the assembly.
3. Unscrew the weakening device signal cap, collect the cap fibre washer. Unscrew the signal line adapter from the casting and withdraw the aluminium washer from the adapter.
4. Remove the circlip from the top of the fuel receiver chamber, withdraw the float chamber vent pipe (slight resistance may be felt due to the rubber sealing ring). With a soft drift (e.g. wooden pencil), push the float chamber vent valve out of the weakening device assembly (the drift is required because the rubber sealing ring fitted around the vent valve will cause a slight resistance).
5. Remove the circlip from the base of the venturi chamber, withdraw the air **intake pipe** containing a one-way valve (slight resistance may be felt due to the rubber sealing ring).
6. Remove the **anti-tamper cover** from the top of the venturi chamber, unscrew the lock-nut and using a screwdriver unscrew the **adjusting screw.**

Weakening device - To assemble
To assemble the weakening device, reverse the procedure given for removal, noting the following.
1. Ensure that all components are clean before assembly.
2. Ensure that the rubber sealing rings are in a good condition and lightly smeared with the minimum amount of grease. Ensure that no grease is applied to the valves otherwise a malfunction may occur due to the grease making the valves stick.
3. After assembly, the operator should check that he can blow but not suck on the metal pipes, one on top of the fuel receiver chamber and the other at the bottom of the venturi chamber.

Weakening device signal strength - To check
The **float chamber depression** should be checked as follows.
1. Start and run the engine until normal setting conditions are attained (i.e. engine cooling system thermostat opened, air conditioning unit switched off and the automatic choke is off).
2. Stop the engine.
3. Connect an electric impulse tachometer to the engine in accordance with the manufacturer's instructions.
4. Isolate the E.G.R. valves from the weakening system by disconnecting the E.G.R. signal pipe from the 'Y' piece located between the weakening system

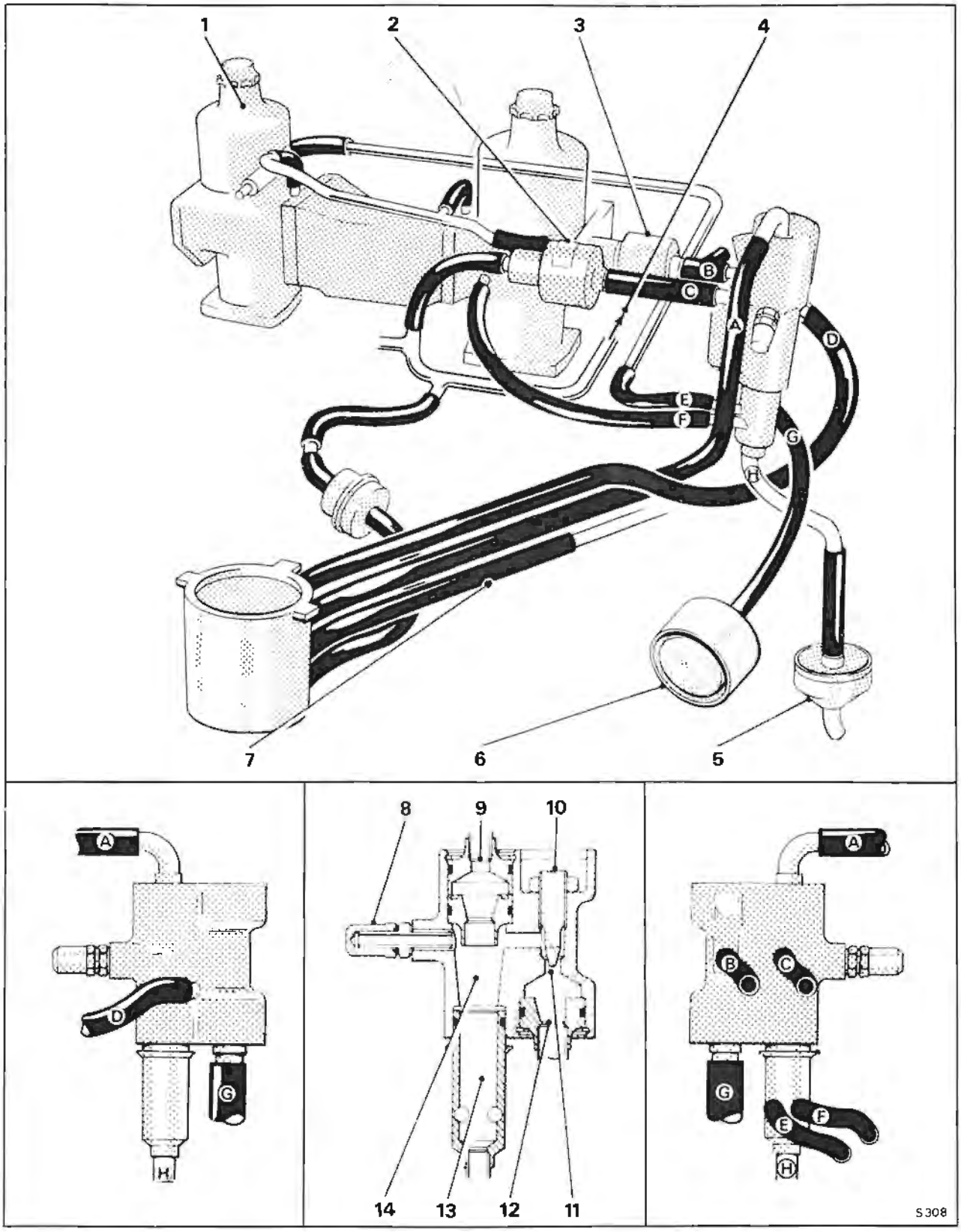

Fig. U19 Mixture weakening device

1 'A' bank carburetter
2 Anti 'run-on' solenoid
3 Weakening device cut-off solenoid
4 Induction manifold connection
5 Float chamber drain valve
6 Weakening system air filter
7 Vent from fuel tank
8 Weakening device signal cap
9 Float chamber vent valve
10 Adjusting screw
11 Venturi chamber
12 Air intake valve
13 Fuel receiver
14 Fuel receiver chamber

Printed in England
© Rolls-Royce Motors Limited 1980
March 1980
TSD 4200
(Australia
1980 Model Year)

cut-off solenoid and the weakening device. Blank off the 'Y' piece connection.
5. Unscrew and remove the weakening device signal cap and connect a 0 to 15,5 cm. (0 to 6 in.) water manometer to the weakening device adapter.
6. Start and run the engine at 2 000 r.p.m. in 'Park' until a steady manometer reading is obtained, this should be 5,08 cm. (2.0 in.) of water depression.
A low or zero reading may be caused by
a. A blockage in the weakening device venturi to the weakening device cut-off solenoid.
b. A blockage or restriction in the signal pipe(s).
c. An air leak in the hoses or pipes from the float chambers to the emission control canister.
d. Faulty float chamber vent valve or drain valve.
e. Low engine air intake temperature [below 14° C. (57°F.)].
f. Faulty weakening device solenoid or weakening device switch.
A high reading may be caused by
a. An obstruction in the weakening device bleed orifice (weakening device signal strength adjusting screw).
b. Obstructed weakening device air filter or evaporative loss control canister.
c. Incorrect connection or blockage in the weakening device to either the valance connection or the evaporative loss control canister.
d. Weakening device air intake valve sticking closed.
e. Obstructed weakening device air filter hose.
f. Incorrect operation of anti 'run-on' solenoid.
7. If the float chamber depression is still incorrect after checking through the possible causes in Operation 6, set the weakening device signal strength (float chamber depression) by unlocking and turning the adjusting screw (see Fig. U19) until the correct manometer reading is obtained. Turning the adjusting screw clockwise increases the depression.
8. Remove the blank from the E.G.R. and weakening system 'Y' piece and connect the E.G.R. pipe.
9. Raise the engine speed slowly noting both the manometer and tachometer readings. The maximum steady manometer reading should be obtained between 1 200 r.p.m. and 1 500 r.p.m.
10. Allow the engine speed to return to the idle setting (650 r.p.m.) and check the float chamber depression reading on the manometer.
If the float chamber depression at idle speed is above 10,16 mm. H_2O (0.4 in.H_2O) check the ignition timing at idle as this condition may result in unsatisfactory driveability.
11. Fit the tamperproof cover into the top of the venturi chamber.

Weakening device air filter - To remove
The air filter container is mounted on the left-hand valance just forward of the road spring pot (see Fig. U15).

This is a sealed unit and no attempt should be made to clean the element.
1. To remove the air filter assembly, detach the hose and unscrew the worm drive clip situated around the assembly.
2. Withdraw the assembly.

Weakening device air filter - To fit
Fit the air filter container by reversing the procedure given for removal.

Section U4

Crankcase emission control system

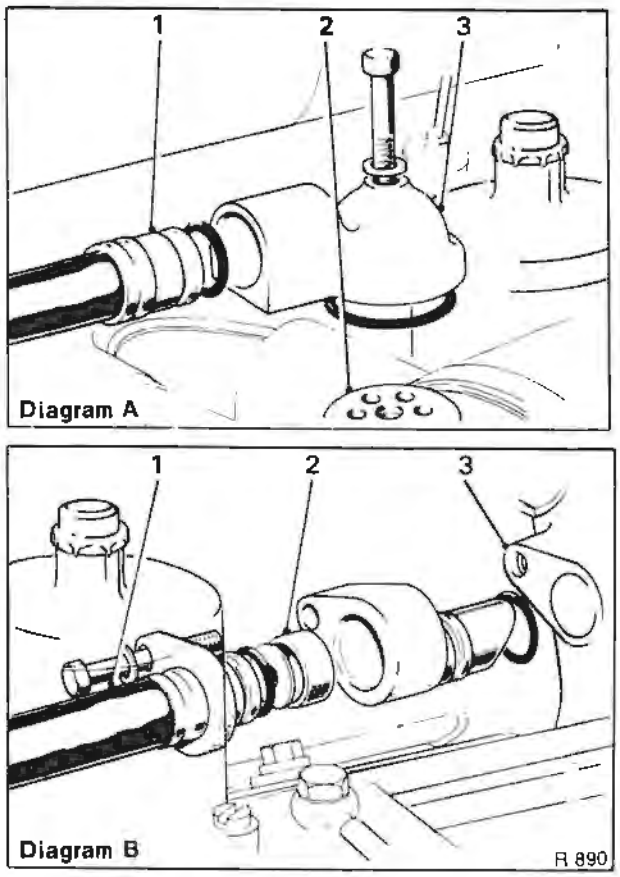

Fig. U20 Crankcase breather pipe connections

Diagram A		Diagram B	
1	Breather tube	1	Breather tube
2	Choke housing	2	Flame trap
3	Breather connection	3	Oil filler housing

Crankcase emissions are controlled by a recirculatory closed breather system.

An insulated draught tube connects the crankcase via the oil filler which is fitted with a sealed cap, to the choke housing upstream of both the choke butterfly and the carburetters. A flame trap capsule containing three wire mesh discs is fitted in a housing at the crankcase end of the draught tube. Engine emission (blow-by) is drawn into the induction system via the draught tube, due to the depression in the choke housing.

1. The flame trap fitted to the breather pipe should be cleaned in the following manner, at the specified mileage.

2. Unscrew the setscrew securing the breather pipe connection to the oil filler pedestal; withdraw the connection from the pedestal (slight resistance may be felt due to the rubber 'O' ring connections).

3. Withdraw the connection from the pipe flange and collect the restrictor.

4. Wash the flame trap assembly in clean fuel, then dry with compressed air from an high pressure air line. The flame trap assembly consists of 3 gauzes crimped together as shown in Figure U20.

5. To clean the adapter fitted to the choke housing, remove the single setscrew from the breather pipe end connection and detach the pipe.

6. Clean the adapter fitted to the choke housing and ensure that the holes in the adapter are clear.

7. Assembly of the flame trap and breather pipe is in the reverse order, ensuring that the 'O' rings are in good condition.

Printed in England
© Rolls-Royce Motors Limited 1980

March 1980
TSD 4200
(Australia
1980 Model Year)

Section U5

Carburetters and Automatic choke system

The Carburetter and Automatic Choke System can be seen illustrated in Figure U21 and comprises the following main components.

Automatic choke
Fast-idle
Stove pipe
(For the remainder of the Automatic Choke System refer to Chapter K).

Carburetters (see Fig. U23)
Bi-metal jet lever
Carburetter fuel filter
Carburetter idle airflow balance
Float
Float chamber
Float needle
Jet assembly
Jet needle
Overrun valve
Piston
Piston damper
Suction chamber
Tamperproof caps

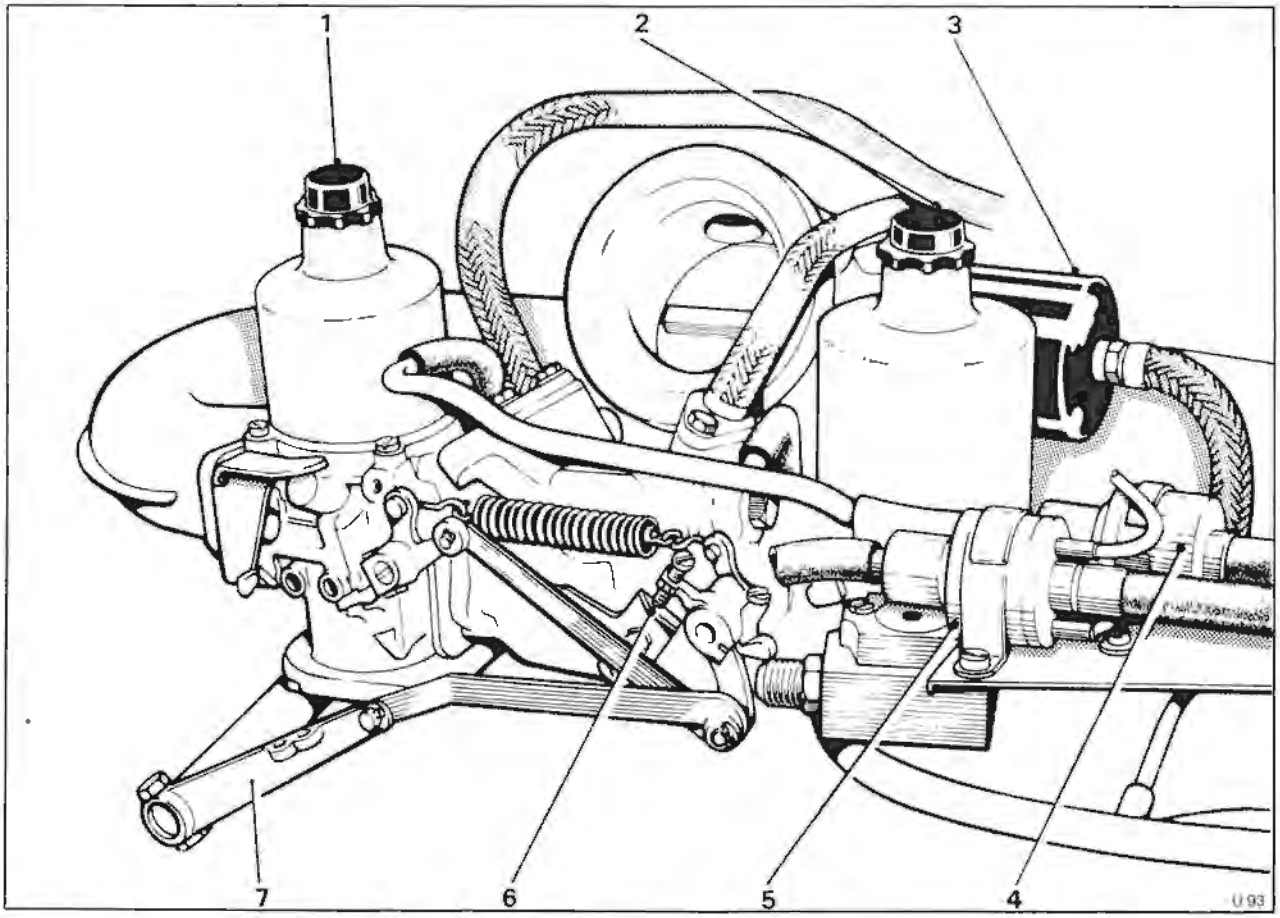

Fig. U21 Carburetters and linkage
1 'A' bank carburetter
2 'B' bank carburetter
3 Choke bi-metal housing
4 Weakening and E.G.R. cut-off solenoid
5 Anti 'run-on' solenoid
6 Idle speed adjusting screw
7 Front manifold shaft lever

Printed in England
© Rolls-Royce Motors Limited 1980
March 1980
TSD 4200
(Australia 1980 Model Year)

Throttle disc
Throttle linkage
Viscosity compensator

Temperature controlled air intake
Air cleaner/silencer
Air blend valve
Cold air intake
Hot air scoop
Manifold vacuum hose
Resonator
Temperature sensor

Weakening device
(Refer to Section U3).

Automatic choke
All details for the Automatic Choke System are given in Chapter K, except for the checking and setting procedures of the following.

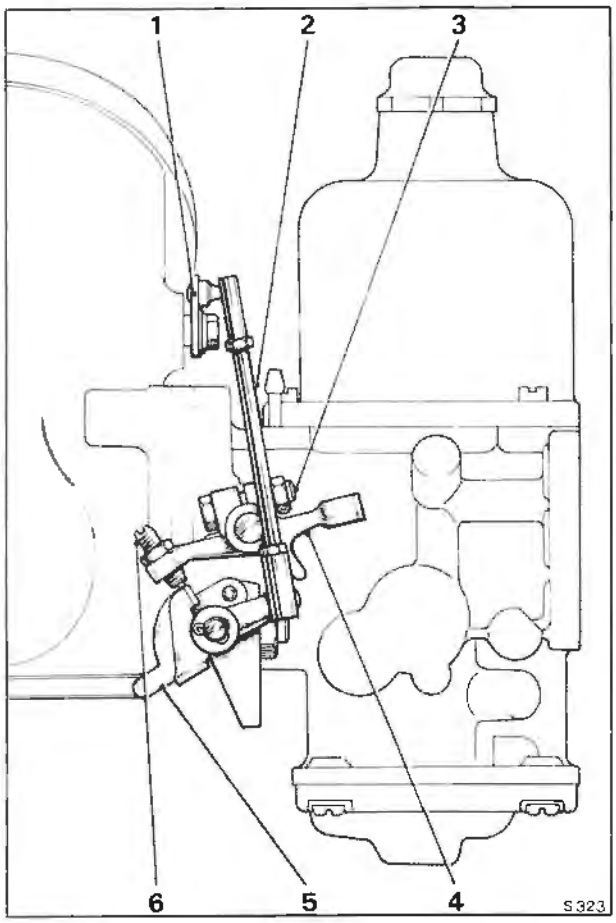

Fig. U22 Fast-idle mechanism
1 Control rod lever
2 Butterfly rod
3 Lever clamp bolt
4 Fast-idle lever
5 Cam
6 Adjusting screw

Fast-idle To set

1. Ensure that the usual safety precautions are carried out (i.e. parking brake firmly applied, gear range selector lever in 'Park' etc.) and connect an impulse tachometer in accordance with the manufacturer's instructions.

2. Disconnect the E.G.R. vacuum signal at the pipe from the solenoid 'Y' piece to the E.G.R. valves and blank the 'Y' piece connection.

3. Start and run the engine until normal operating temperature is attained. Stop the engine and remove the pressure tapping cap from the weakening device (see Fig. U19).

4. Open the throttles and close the choke butterfly against the bi-metal tension using control rod lever (item 1 - Fig. U22) until the adjusting screw (item 6 - Fig. U22) is resting on the tip of the fast-idle cam. At this point an extra load will be felt due to the action of the extended fast-idle plunger ceasing.

5. Start the engine, if the speed is outside a range of 850 r.p.m. to 900 r.p.m. stop the engine, open the throttles to gain access to the adjusting screw and turn the screw approximately ⅛ turn for each 20 r.p.m. required. Tighten the lock-nut.

6. Start the engine and again check the fast-idle speed.

7. When the engine speed has been adjusted to within the prescribed limits open the throttles to release the fast-idle mechanism.

8. Stop the engine, disconnect the tachometer, remove the blank from the 'Y' piece connection at the cut-off solenoid and fit the E.G.R. signal pipe to the 'Y' piece connection. Fit the pressure tapping cap to the weakening device.

Choke stove pipe - To flow check

1. Ensure that the usual safety precautions are carried out (i.e. parking brake firmly applied, gear range selector lever in 'Park' etc.) and connect an impulse tachometer in accordance with the manufacturer's instructions.

2. Start and run the engine until normal operating temperature is attained. Stop the engine.

3. Disconnect the stove pipe union at the intake elbow (see Fig. U35) and connect a flowmeter to the pipe via a connector (RH 8945). The flowmeter must be a rotameter type capable of measuring 2,9 cu.m/hr. (100 cu.ft/hr.).

4. Start and run the engine at idle speed (650 r.p.m.); observe the flowmeter, a correct reading is between 1,41 cu.m/hr. and 1,55 cu.m/hr. (50 cu.ft/hr. and 55 cu.ft/hr.).

5. If the flow is less than 1,41 cu.m/hr. (50 cu.ft/hr.) check the choke stove pipe unions for leaks.

6. If the flow is in excess of 1,55 cu.m/hr.

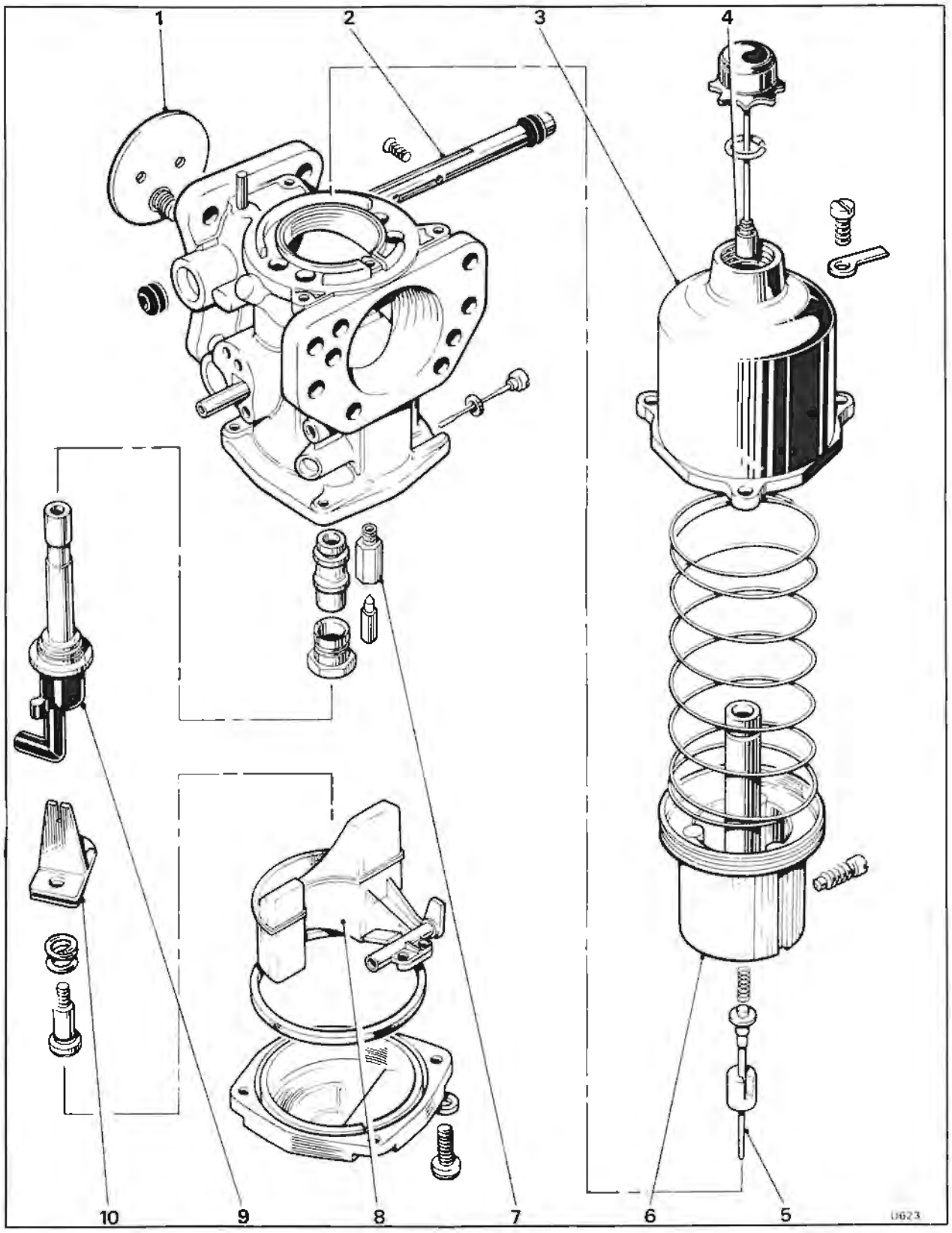

Fig. U23 SU HIF7 carburetter

1 Throttle disc with overrun valve
2 Throttle spindle
3 Suction chamber
4 Piston damper
5 Jet needle
6 Piston
7 Float needle valve assembly
8 Float
9 Jet assembly
10 Bi-metal jet lever

Printed in England
© Rolls-Royce Motors Limited 1980

(55 cu.ft/hr.), fit a new restrictor in the choke bi-metal housing (see Chapter K).

Carburetters

Two S.U. HIF7 (Horizontal Integral Float Chamber) carburetters with 4,76 cm. (1.875 in.) choke bores (see Fig. U23) are fitted to the engine on a central 'tee' piece which is mounted over an eight branch induction manifold.

This type of carburetter automatically adjusts both its choke and jet area to meet the demand of the engine which is dependent on engine speed and loading. As air is drawn through the carburetter, the piston acting as an obstruction will cause a depression to be formed in the area between the throttle and the piston. This depression is communicated by means of transfer holes in the base of the piston to the area above the piston, causing an upward force to be imposed on the piston. The piston will rise in response to this force relieving the depression in the area between the piston and the throttle as it does so until a point is reached where the force acting on the piston is balanced by the weight of the piston and the load exerted by the piston spring.

A spring-loaded jet needle is fitted to the carburetters, which is biased downstream and operates in a 2,54 mm. (0.10 in.) diameter main jet; this jet does not require centralising.

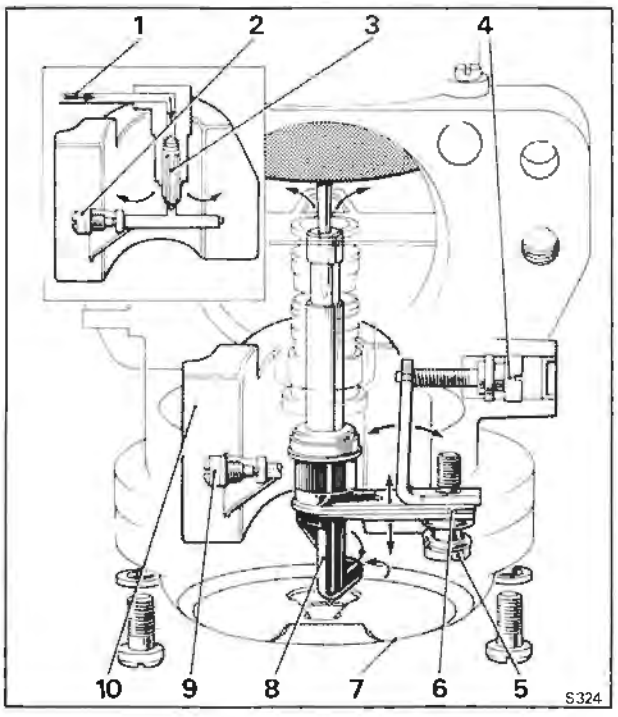

Fig. U24 Float chamber layout

1 Fuel inlet
2 Float fulcrum screw
3 Needle valve
4 Jet adjusting screw
5 Bi-metal pivot screw
6 Bi-metal assembly
7 Bottom cover-plate
8 Jet head
9 Float fulcrum screw
10 Concentric float

Float chamber (see Fig. U24)

The float chamber is incorporated in the main body casting; access to the chamber is obtained by removing the bottom cover-plate (item 7). The moulded float (item 10) is shaped so that it surrounds the jet tube and is pivoted along a line parallel to the inlet flange. The float is retained by a spindle (items 2 and 9) which screws into the body casting.

Entry of the fuel into the float chamber is via a brass tube (item 1) in the side of the carburetter body to a needle valve assembly (item 3).

The jet is pressed into the top of an aluminium tube which is in turn pressed into a plastic moulding (item 8). This hollow moulding known as the jet head is open at its lower end allowing fuel to enter the jet tube.

Mixture adjustment (see Fig. U24)

The jet tube of the HIF type carburetter is moved in the vertical plane to provide mixture adjustment.

The jet adjustment assembly is comprised of a right-angled adjusting lever of unequal length arms riveted to a bi-metal blade (item 6).

The blade is cut out to accept the jet head (item 8) and the shape of the jet head is formed so that any movement of the bi-metal blade is transmitted to the jet head, moving it in the vertical plane.

The right-angled adjusting lever and bi-metal blade (item 6) are attached to the body casting by a spring-loaded retaining screw (item 5) positioned in the short arm of the lever. This attachment allows the adjusting lever to be pivoted at the outer edge of its short arm and is loaded by the spring towards the jet adjusting screw (item 4).

The jet adjusting screw is located at the outer end of the long arm of the adjusting lever; screwing the adjusting screw inward will lower the jet, enriching the mixture and unscrewing the adjusting screw will allow the spring to return the lever together with the jet, weakening the mixture.

After the mixture has been set the jet adjustment can be sealed by fitting a plug into the jet adjusting screw recess of the carburetter body.

HIF7 carburetters are set and balanced by accurate flow measuring techniques during manufacture and therefore, adjustment of the mixture screws should not be necessary.

Fuel temperature compensation (Viscosity compensator) (see Fig. U24)

This device alters the jet position in relation to the

metering needle to compensate for changes in fuel viscosity which take place with changes in fuel temperature.

When the fuel temperature rises, the viscosity is lowered, and in an uncompensated assembly this would allow more fuel to flow for a given jet/needle relationship.

In the HIF jet assembly the jet head is attached to a bi-metal blade (item 6). This bi-metal is immersed in the fuel in the float chamber and will move in the vertical plane in response to changes in fuel temperature. The jet will be raised to a weaker position on the jet needle when the fuel temperature rises and will be lowered to a richer position when the temperature falls.

From this it will be seen that once the jet position has been selected by adjusting the mixture screw, alterations of fuel temperature will bring about slight alterations in jet position to compensate for the change in fuel viscosity.

The effect of this device is that drivability is improved over wide ranges of temperature, and that exhaust emissions can be kept within closer limits during cold starting and the warm-up period. Temperature compensation also allows carburetters to have the mixture setting pre-set and sealed before the car is delivered.

Overrun valve (see Fig. U25)

During overrun (i.e. when decelerating with the throttles closed), insufficient mixture is supplied to the engine to maintain satisfactory combustion. The overrun valves alleviate this condition by allowing some mixture to pass through the throttle plates (butterflies) at high inlet manifold depressions.

An overrun valve is fitted into the throttle plate of each carburetter.

An overrun valve consists of a small disc retained in each throttle plate by a spring loaded plunger. Under normal conditions the disc is seated against the throttle plate. When the throttle is suddenly closed, the increased inlet manifold depression lifts the disc from its seating and allows a metered quantity of air/fuel mixture to pass through the throttle plate.

The action of the overrun valves maintains satisfactory combustion on overrun, thus reducing hydrocarbon emissions.

After the sudden closure of the throttles and as soon as the manifold depression falls, the overrun valve disc returns to its seat on the throttle plate.

Spring-loaded jet needle (see Fig. U26)

The jet needle fitted to each carburetter is biased towards a predetermined position in the jet orifice by means of a spring-loaded fixing.

The shoulder of the needle abuts a protrusion formed on the needle guide. Under the pressure of a spring the needle is held permanently in one position relative to the air flow. As the needle is retained in a predetermined position no jet centring is required and a non-centreable jet bearing is fitted. To ensure correct fitting the needle guide carries an etched alignment mark which should be

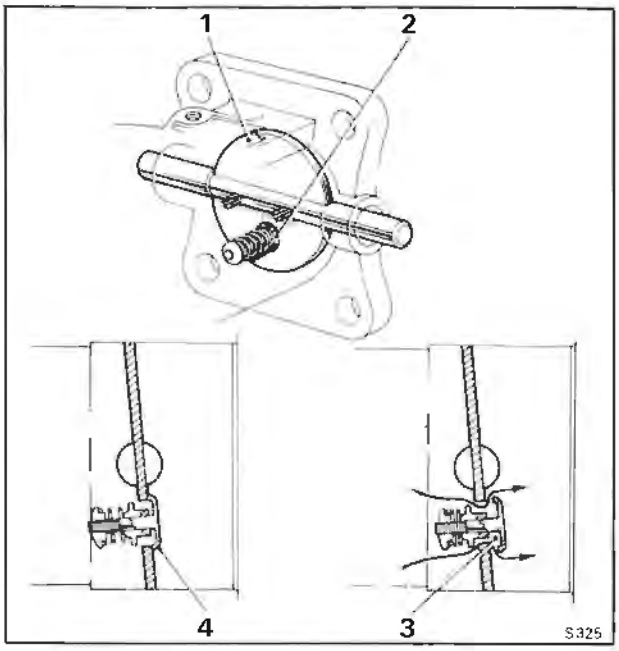

Fig. U25 Overrun valve
1 Throttle butterfly disc
2 Overrun valve
3 Overrun valve open
4 Overrun valve closed

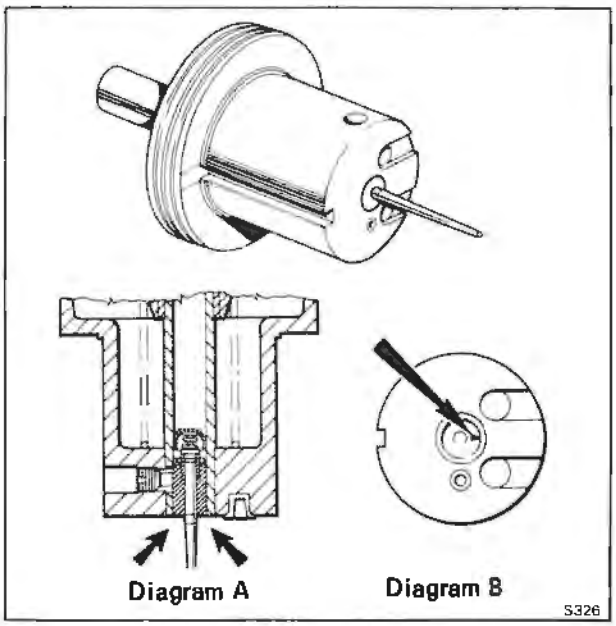

Fig. U26 Spring-loaded jet needle
Diagram A
Needle guide height setting
Diagram B
Needle guide alignment setting

Printed in England
© Rolls-Royce Motors Limited 1980
March 1980
TSD 4200
(Australia
1980 Model Year)

positioned mid-way between the two cut-outs in the piston.

Carburetter fuel filter
A filter element is fitted into the fuel filter housing attached to the side of each carburetter. At the intervals specified in the Service Schedules these two filter elements should be discarded and new ones fitted as described in Chapter K.

Carburetters and air horns assembly - To remove
Before commencing to remove the carburetters observe the following points.
1. When disconnecting the various hoses, pipes and wiring connections ensure that they are suitably labelled to assist identification when assembling.
2. Ensure that **all** open ends of pipes, hoses, etc. are suitably blanked off to prevent the ingress of dirt, etc.
3. Ensure that the usual safety precautions are carried out (i.e. parking brake firmly applied, gear range selector lever in 'Park', battery disconnected, etc.).

To remove the carburetter and air horn assembly proceed as follows
From 'A' bank side
1. Remove the air intake elbow casting (refer to Air intake - To remove in Chapter K).
2. Disconnect the fuel feed pipe fitted adjacent to 'A' bank carburetter.
3. Withdraw the electrical connections from the speed control bellows assembly. Disconnect the chain link from the throttle linkage to the speed control bellows assembly. Withdraw the vacuum hose from the speed control bellows assembly. Unscrew and remove the 'steady' bolt from the speed control bracket.
4. Remove the split pin, washer and clevis pin from the throttle linkage just forward of 'A' bank carburetter.
From 'B' bank side
5. Disconnect the E.G.R. feed pipe upper joint (refer to E.G.R. feed pipe - To remove, Section U2).
6. Unscrew the union on the choke stove pipe at the bi-metal housing.
7. Unscrew the fuel feed pipe union at 'B' bank carburetter filter housing.
8. Remove the crankcase emission control system pipe from the choke butterfly housing; withdraw the housing from the end of the pipe.
9. Disconnect the electrical cables to the choke solenoid at the 'snap connector' joints, adjacent to the butterfly housing.
10. Disconnect the electrical connections to the weakening and E.G.R. cut-off solenoid and to the anti 'run-on' solenoid.
11. Detach the following hoses from the weakening device.
a. the hose from the float chamber vent valve
b. the hose from the fuel receiver
c. the hose to the air filter
d. the hose from the venturi chamber
These hoses are labelled A, H, G and D in Figure U4.
12. Disconnect the purge line at the restrictor.
13. Unscrew the 7/16 in. A/F nut from the dipstick bracket; collect the washer
14. Unscrew the ½ in. A/F setscrew from the centre of the carburetter 'tee' piece; withdraw the setscrew and washer.
15. Carefully withdraw the carburetters and air horn assembly, ensuring that no pipes, hoses or electrical items are still connected.

Carburetters and air horns assembly - To fit
Fit the carburetters by reversing the procedure given for their removal, noting the following points.
1. Ensure that all joint faces are clean.
2. Fit new gaskets.

Carburetters - To remove
Remove the carburetters and air horn assembly from the car (refer to Carburetters and air assembly - To remove) and then, remove the carburetters from the air horns assembly as follows.

'A' bank carburetter
1. Unscrew the two ½ in. A/F nuts securing the air horn to 'A' bank carburetter
2. Withdraw the bolts and collect the washers.
3. Move the air horn flange upwards away from the carburetter.
4. Unscrew the union from the fuel filter.
5. Detach the vacuum supply hose from on top of the carburetter body adjacent to the carburetter and 'tee' piece flange.
6. Detach the hose from the side of the carburetter that connects to the fuel receiver in the weakening device
7. Completely remove the two pinch bolts securing the throttle levers to the 'A' and B' bank carburetter butterfly spindles, remove the levers.
8. Unscrew the nut and withdraw the pinch bolt securing the 'fast-idle' lever to the carburetter spindle; withdraw the lever.
9. Unscrew the four half-nuts that retain the carburetter to the 'tee' piece flange; collect the washers.
10. Withdraw the carburetter and collect the gasket.

'B' bank carburetter
1. With a screwdriver, unscrew and remove the two screws securing the solenoid platform in position adjacent to 'B' bank carburetter. One screw is located on the air horn and has a nut underneath, and the other screw is situated in the filter housing.
2. Unscrew the ½ in. A/F nuts from the bolts that retain the air horn to the carburetter flange;

withdraw the bolts and collect the washers. Move the solenoid platform away from the carburetter.
3. Detach the hose from the side of the carburetter to the fuel receiver in the weakening device.
4. Carefully ease the air horn upwards away from the carburetter.
5. Completely remove the two pinch bolts securing the throttle levers to the 'A' and 'B' bank carburetter butterfly spindles, remove the levers.
6. Detach the vacuum supply hose from on top of the carburetter body adjacent to the carburetter and 'tee' piece flange.
7. Unscrew the remaining union from the fuel filter housing.
8. Unscrew the four half-nuts that retain the carburetter to the 'tee' piece flange; collect the washers.
9. Withdraw the carburetter and collect the gasket.

Dismantling of the components within the carburetters is not recommended as all carburetters are set and balanced by accurate flow measuring techniques during manufacture.

In certain isolated instances however, it maybe necessary to dismantle the carburetters and under these conditions the following procedure should be carefully followed.

Carburetter - To dismantle
Upper half (see Fig. U27)
1. Thoroughly clean the outside of the carburetter.
2. Unscrew the suction chamber retaining screws and remove the identity tag.
3. Lift the chamber assembly vertically from the body without tilting it.
4. Unscrew and remove the damper rod, taking care not to bend the rod as it is withdrawn.
5. Push the piston to its highest point in the suction chamber and carefully prise the circlip from around the top of the piston rod.
6. Withdraw the suction chamber from the piston in an upwards direction.

Remove the piston spring and empty the oil from the piston rod.
7. Note the position of the needle guide etch mark in relation to the piston transfer holes for correct reassembly and unscrew the needle guide locking screw.

Withdraw the needle, guide and spring.

Lower half (see Fig. U28)
8. Mark the bottom cover-plate and body to ensure correct reassembly, unscrew the retaining screws and remove the cover complete with the sealing ring.
9. Remove the jet adjusting screw complete with 'O' ring.
10. Remove the jet adjusting lever retaining screw and spring.
11. Withdraw the jet complete with adjusting lever and disengage the lever.

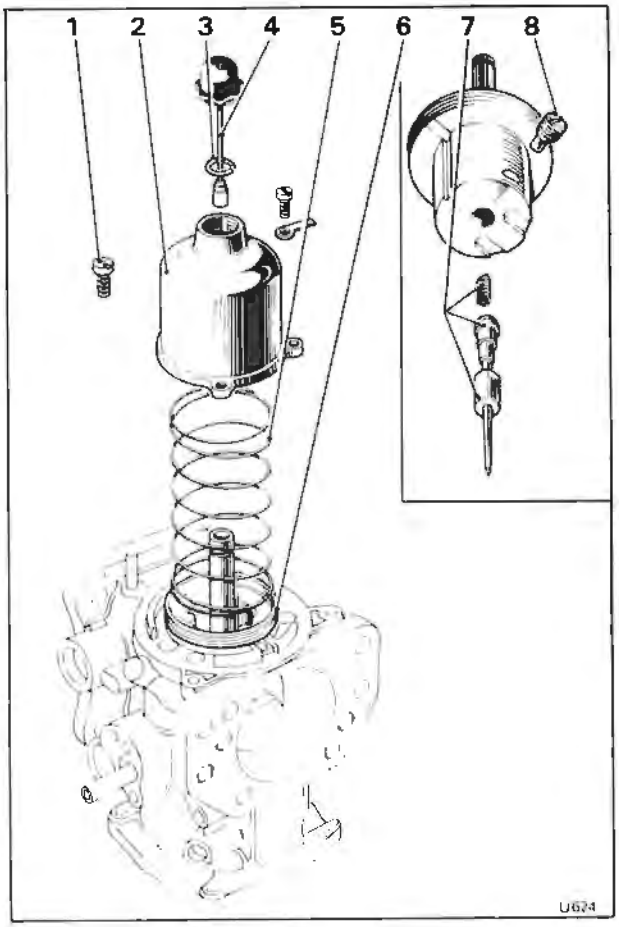

Fig. U27 Dismantling a carburetter (Upper half)
1 Suction chamber retaining screw
2 Suction chamber
3 Circlip
4 Damper rod
5 Spring
6 Piston
7 Spring-loaded needle assembly
8 Needle guide locking screw

12. Remove the float pivot spindle and aluminium washer.
13. Withdraw the float.
14. Remove the needle valve and unscrew the valve seat.
15. Unscrew the jet bearing locking nut and withdraw the bearing complete with fibre washer.

Throttle disc assembly (see Fig. U29)
16. Remove the throttle disc retaining screws.
17. Close the throttle and mark the position of the throttle disc in relation to the carburetter flange. **Do not mark the disc in the vicinity of the overrun valve.** Open the throttle and carefully withdraw the disc from the throttle spindle taking care not to damage the overrun valve.
18. Withdraw the throttle spindle and remove the seals, noting the way it is fitted in relation to the carburetter body to ensure correct reassembly.

Printed in England
© Rolls-Royce Motors Limited 1980

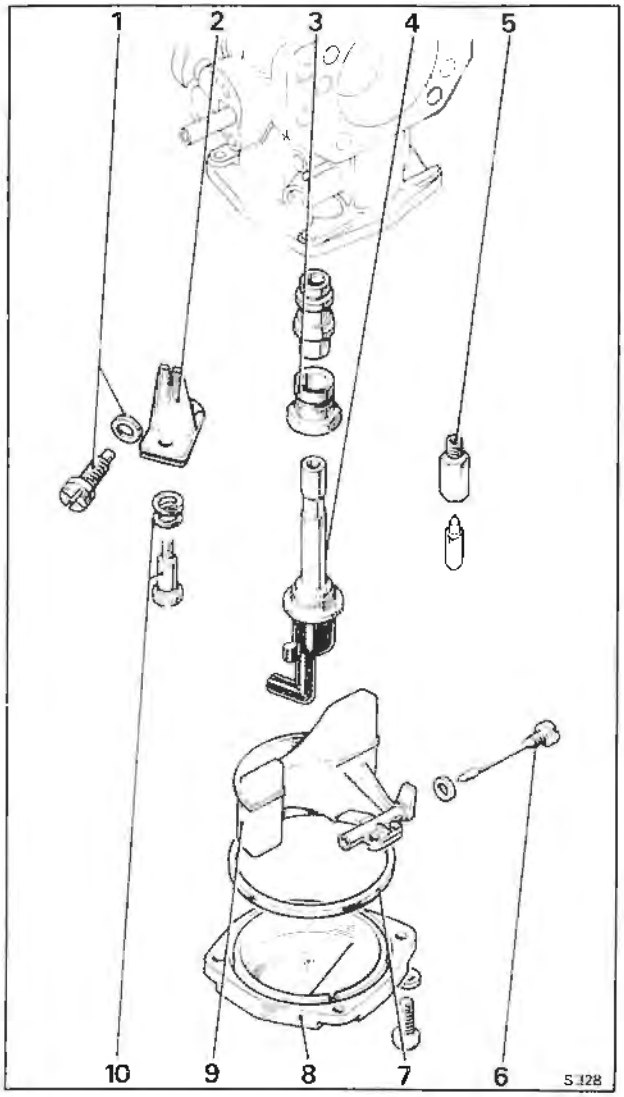

Fig. **U28 Dismantling a carburetter (Lower half)**

1 Jet adjusting screw and 'O' ring
2 Jet adjusting lever
3 Jet bearing assembly
4 Jet
5 Float chamber needle valve assembly
6 Float pivot spindle
7 Sealing ring
8 Bottom cover-plate
9 Float
10 Jet lever adjusting screw

Carburetter - To inspect

1. Examine the throttle spindle and its bearings in the carburetter body; check for excessive play, and fit new parts if necessary.

2. Examine the float needle and seating for damage and excessive wear; fit new parts if necessary.

3. Examine all rubber seals and 'O' rings for damage or deterioration; fit new parts if necessary. **The cover-plate sealing ring must be renewed.**

4. Examine the carburetter body for cracks and damage and for security of the brass connections and the piston key.

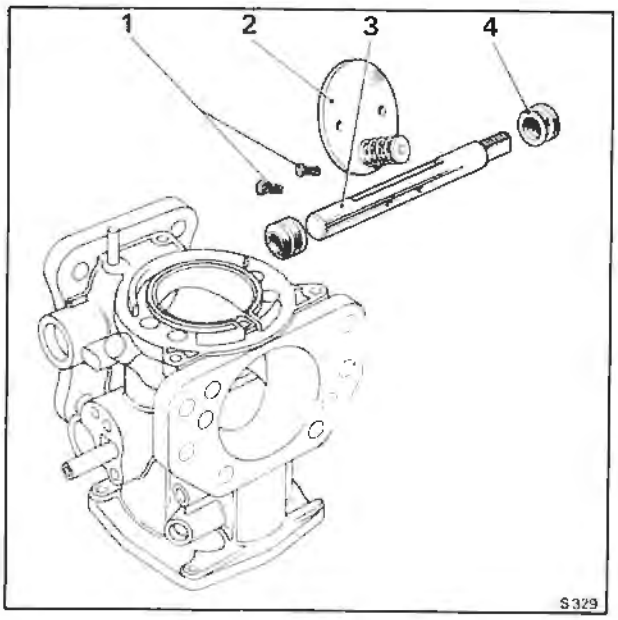

Fig. **U29 Dismantling a carburetter (Throttle disc assembly)**

1 Throttle disc retaining screws
2 Throttle disc assembly
3 Throttle spindle
4 Seal

5. Clean the inside of the suction chamber and piston rod guide with fuel or methylated spirit (denatured alcohol) and wipe dry. **Abrasives must not be used.**

6. Examine the suction chamber and piston for damage and signs of scoring.

7. Check that all the balls are in the piston ball race (2 rows, 6 per row). Fit the piston into the suction chamber, without the damper and spring, hold the assembly in a horizontal position and spin the piston. The piston should spin freely in the suction chamber without any tendency to stick.

Carburetter - To assemble

Assemble the carburetter by reversing the procedure given for removal, noting the following points.

1. Ensure that the throttle disc is fitted in its original position.

2. New throttle disc retaining screws must be used when refitting the disc. Ensure that the throttle disc is correctly positioned and closes correctly before tightening the retaining screws. Spread the split ends of the screws sufficiently to prevent turning.

3. Position the throttle spindle end seals just below the spindle housing flange.

4. When fitting the jet assembly to the adjusting lever ensure that the jet head moves freely in the bi-metal cut-out.

5. Fit a new float pivot spindle sealing washer or anneal the existing washer.

Check the level of the float in the float chamber (refer to Carburetter float level - To set).

6. Check that the small diameter of the jet adjusting screw engages the slot in the adjusting lever and set the jet 3,05 mm. (0.12 in.) below the bridge of the body.

7. Ensure that the needle guide etch mark aligns correctly with the piston transfer holes After fitting the needle assembly, check that the shoulder of the guide aligns with the face of the piston (see Fig. U26).

8. To prevent the piston spring from being 'wound up' during reassembly, temporarily fit the piston and suction chamber, less the piston spring, to the body and pencil mark their relative positions to each other.

9. Fit the spring to the piston, hold the suction chamber above the piston, align the pencil marks and lower the chamber over the spring and piston.

10. Fit the three retaining screws, together with the identity tag.

11. Push the piston to its highest point in the chamber, so that the piston rod protrudes out of the suction chamber neck.

12. Fit the circlip to the piston rod (see Fig. U30).

13. Fit the damper rod, noting that the damper should be filled with engine oil when the carburetter is fitted to an engine (see Carburetter air valve damper - To top-up).

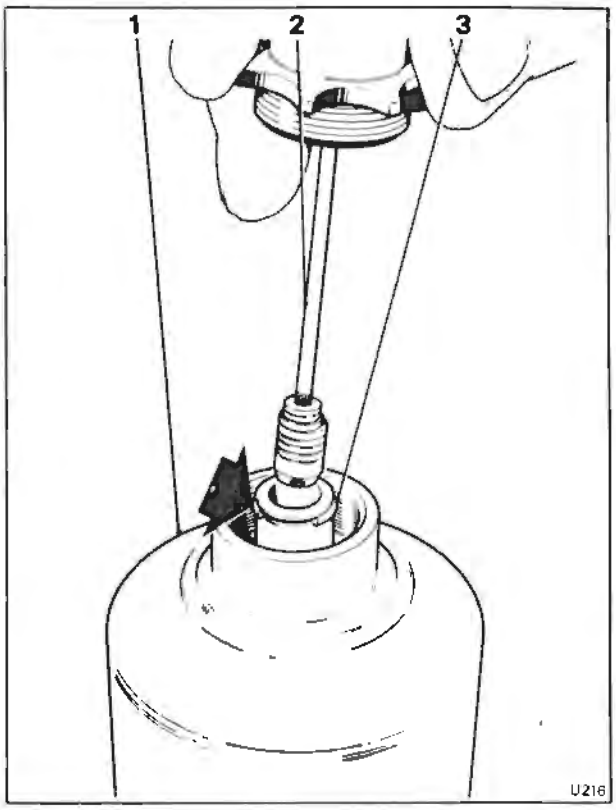

Fig. U30 Carburetter damper assembly
1 Suction chamber
2 Damper rod
3 Circlip

Carburetter float level - To set

1. Remove the carburetter from the engine.

2. Invert the carburetter.

3. Mark the bottom cover-plate and carburetter to ensure correct assembly, unscrew the retaining screws and remove the cover complete with the sealing ring.

A new rubber sealing ring must be installed when fitting the cover-plate.

4. Ensure that the float chamber needle valve is held in the closed position by the weight of the float only.

5. Check that the lowest point on the float (see Fig. U31) is either level with the float chamber face, or up to 1,52 mm. (0.060 in.) below.

6. If necessary, adjust the float position by carefully bending the brass pad.

7. Check that the float pivots correctly about the spindle.

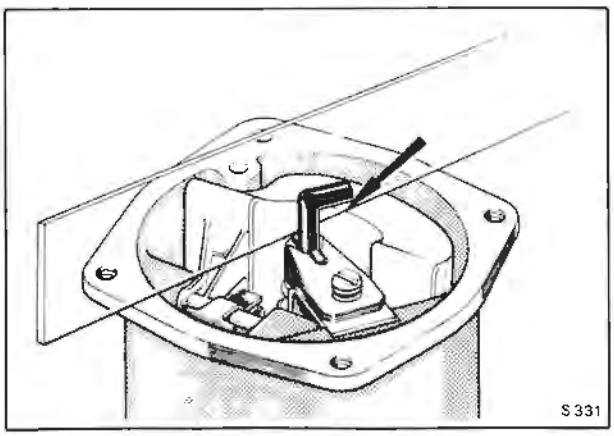

Fig. U31 Checking the float level

Carburetter air valve damper - To top-up

The upper portion of the piston rod (guide spindle), attached to the air valve piston in each carburetter, is hollow and is filled with the same type of oil as used in the engine.

At the service intervals specified in the Service Schedules the damper oil level should be checked and topped-up if necessary.

1. Unscrew and remove the cap and damper assembly from the air valve damper.

2. Top-up the damper reservoir in the air valve with clean engine oil to approximately 13 mm. (0.50 in.) from the top of the tube. Fit the damper into the tube and screw the cap firmly into position.

Printed in England
© Rolls-Royce Motors Limited 1980
March 1980
TSD 4200
(Australia
1980 Model Year)

Carburetter throttle linkage - To fit and set (see Fig. U32)

1. Assemble 'A' bank and 'B' bank throttle levers (items 6 and 11) onto the carburetter spindles.
2. Fit the setting jig (RH 8880) into position on the throttle levers.
3. Fully close 'B' bank carburetter butterfly (item 7).
4. Tighten the pinch bolt securing 'B' bank throttle lever.
5. Fully close 'A' bank carburetter butterfly (item 2).
6. Tighten the pinch bolt securing 'A' bank throttle lever.
7. Fit the throttle spring (item 3) to the throttle levers.
8. Remove the setting jig from the throttle levers.
9. Fit the cross link guide bracket (item 9) to the carburetter 'tee' piece (item 5). Secure in position with two small screws which should be 'locked' using two tab washers.
10. Fit the cross link (item 10) and the eccentric throttle adjuster (item 4) onto the throttle levers, ensuring that both throttle butterflies are closed when adjusting and tightening the eccentric adjuster.

Note
The eccentric pin should be set in the lowest position.

11. Ensure that the cross link guide (item 9) has a clearance of between 1,27 mm. (0.050 in.) and 1,78 mm. (0.070 in.) with the cross link. If necessary bend the guide to give these clearances.
12. Check that the throttle linkage moves freely.
13. Fit the idle stop screw (item 8) and lock plate; adjust until the screw just contacts the stop bracket (item 9) with the throttle butterflies remaining in the closed throttle position.
14. Screw down the idle stop screw half a turn.
15. Connect one end of the drive link (item 12) to the 'B' bank throttle lever and the other end, to the manifold shaft lever (item 13).
16. Operate the linkage to ensure free movement.
17. With the throttles in the closed position check that the 'A' bank control shaft to control rod lever (item 14) on the rear of the manifold shaft is in line with the front manifold shaft lever (item 13). Tighten the securing bolts on both levers.
18. Operate the mechanism; check for freedom of movement within the linkage and also clearance with the various engine components.
19. To set the remainder of the linkage from the control rod lever on the rear of the manifold shaft to the accelerator pedal refer to Chapter K - Fuel system.

Carburetters - To set

The carburetters fitted to these cars are adjusted at the factory using special equipment to ensure that their settings comply with the current emission control regulations.

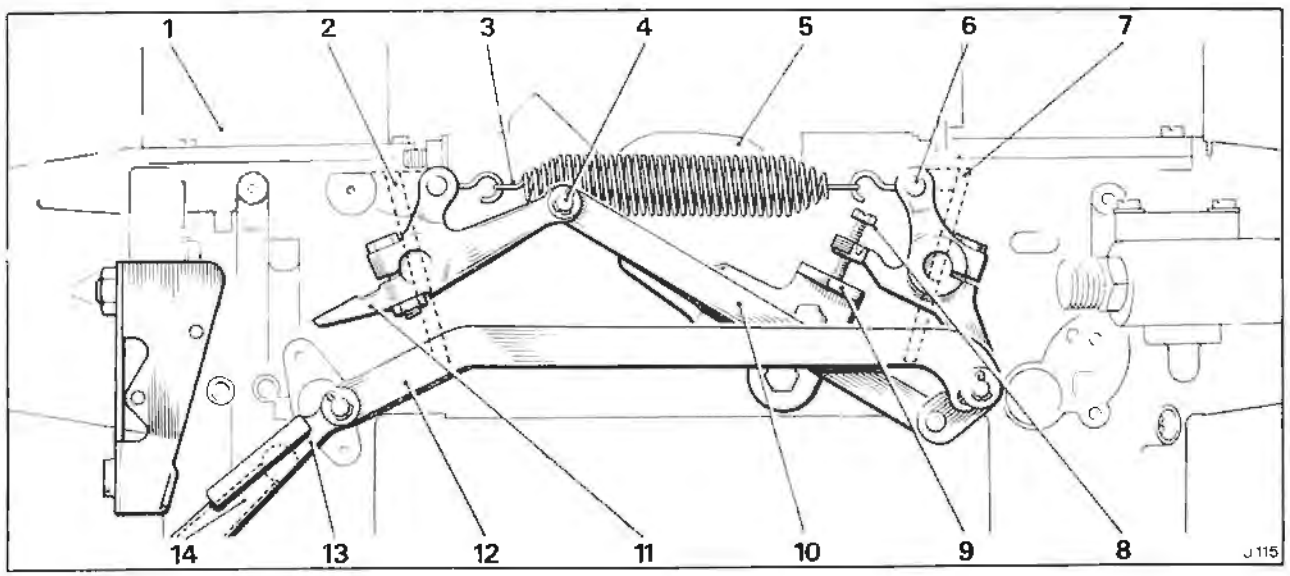

Fig. U32 Carburetter throttle linkage

1 'A' bank carburetter
2 'A' bank carburetter throttle butterfly
3 Throttle spring
4 Eccentric throttle adjuster
5 Carburetter 'tee' piece
6 'B' bank carburetter throttle lever
7 'B' bank carburetter throttle butterfly
8 Idle stop screw
9 Throttle cross link guide bracket
10 Cross link
11 'A' bank carburetter throttle lever
12 Drive link
13 Front manifold shaft lever
14 Rear manifold shaft lever

Under normal circumstances the carburetters should not require adjustment in service.

If however, adjustment is found necessary due to inadvertent disturbance or replacement of a component set the carburetters by carrying out the following operations in the sequence given.

a. Set throttle linkage and temporarily set engine idle speed. Check linkage clearances.
b. Set cold start fast-idle cam.
c. Tune carburetters.
d. Set cold start fast-idle speed.
e. Set the Kickdown and Full throttle E.G.R. cut-out micro-switch.

Carburetter tuning

Preliminary checks

Before tuning the carburetters the following checks should be carried out.

Ensure that the vehicle is in 'Park', the parking brake firmly applied and that the gear range actuator thermal cut-out has been removed from the main fusebox.

1. Check the condition of the sparking plugs.
2. Check the ignition timing.
3. Check the flow through the choke stove pipe.
4. Check the entire induction system for air leaks.
5. Check the purge line flow rate.
6. Ensure that the air conditioning system is switched off.
7. Start the engine and warm up; allow to run for at least 5 minutes after the thermostat has opened.
8. Stop the engine, ensure that the choke butterfly valve is fully open and the choke fast-idle off.
9. Connect an electric impulse tachometer in accordance with manufacturer's instructions.
10. Check the float chamber depression.
11. Check the exhaust gas recirculation system for correct operation.
12. Check and set the full throttle exhaust gas recirculation cut-out micro-switch situated under the accelerator pedal.

Carburetter idle air balance

1. Ensure that the usual safety precautions are carried out (i.e. parking brake firmly applied, gear range selector lever in 'Park', etc.) and connect an impluse tachometer in accordance with the manufacturer's instructions.
2. Disconnect the speed control chain.
3. Start and run the engine until normal operating temperature is attained.
4. Stop the engine.
5. Fit the dial gauges RH 8841 with RH 9105 (kit to convert dial gauges to fit the HIF7 carburetters) to the carburetter dashpots in place of the dampers.
6. Zero the gauges with the engine stopped and lightly tighten the gauge clamp screws.
7. Start and run the engine at the idle speed setting (650 r.p.m.); adjust the carburetter piston lifts to be equal (within 10%) using the eccentric adjuster (see Fig. U32).
8. The average piston lift reading should now be between 2,03 mm. and 2,54 mm. (0.080 in. and 0.100 in.).

If the idle speed piston lift is over 2,54 mm. (0.100 in.) check the ignition timing at idle as this condition may result in unsatisfactory driveability.

9. Stop the engine and remove the impulse tachometer.
10. Remove the dial gauges and fit the carburetter dampers.
11. Connect the speed control chain and adjust to give a minimum slack condition, consistant with no impediment to the throttle lever to return to the idle speed position.

Carburetter mixture strength - To set

1. Ensure that the usual safety precautions are carried out (i.e. parking brake firmly applied, gear range selector lever in 'Park' etc.) and connect an impulse tachometer in accordance with the manufacturer's instructions.
2. Remove the air intake, blank off the hot idle compensator feed drilling (see Fig. U33) and replace the intake.
3. Remove the air inlet hose from the air diverter valve and fit a blank over the valve (a suitable blank may be produced from a short length of rubber hose with one end plugged).

Note

The air injection system is inoperative when the air diverter inlet air hose is disconnected from the air pump. The valve must be blanked to prevent air

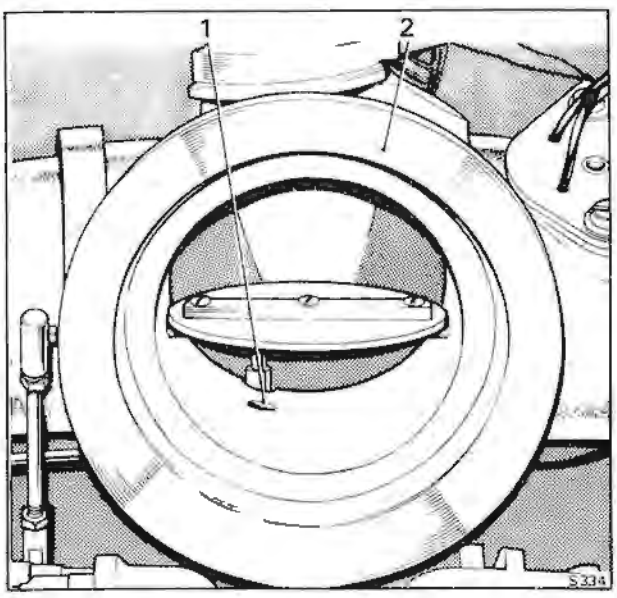

Fig. U33 Hot idle mixture compensator feed
1 Hot idle compensator feed
2 Air intake butterfly housing

Printed in England
© Rolls-Royce Motors Limited 1980
March 1980
TSD 4200
(Australia
1980 Model Year)

being drawn into the exhaust port by pulsations in the exhaust system since this would affect the idle CO reading.

4. Disconnect the E.G.R. valve signal pipe at the cut-off solenoid 'Y' piece, blank off the open 'Y' piece hose connection.

5. Unscrew and remove the pressure tapping cap from the weakening device.

6. Ensure that the engine has run for at least 25 minutes after the thermostat has opened.

7. Purge the engine at 2 000 r.p.m. in 'Neutral' for ¼ minute. Allow the engine speed to return to the idle setting and ensure that this is 650 r.p.m.; adjust if necessary using the idle stop screw.

8. Insert the probe of a CC meter into either exhaust system tailpipe and check the reading.

9. The CO meter reading should be 1% to 4%. If the reading is outside the limits quoted

a. Check for induction system leaks (if below 1%)

b. Check the choke stove and purge line flow rates.

10. If after carrying out Operation 9 the idle speed CO meter reading is still outside the limits quoted, the carburetter mixture screws (see Fig. U24) may be adjusted by equal amounts up to half a turn in the same direction in order to achieve the mean limit of 2.5%. No attempt should be made to adjust the CO reading if it is in the region of 2.5% to 4.0%.

Note

a. Clockwise rotation of the mixture screws will richen the mixture.

b. The tuning operations should be carried out in the shortest possible time. If the time exceeds 3 minutes, run the engine at 2 000 r.p.m. in 'Neutral' for ¼ minute and then resume the tuning operations. Repeat this purging operation if a further period of 3 minutes is exceeded.

After purging the system gently tap all around the neck of the carburetter suction chamber with a lightweight non-metallic object (i.e. the wooden handle of a small screwdriver), to eliminate carburetter piston hysteresis.

11. Stop the engine.

12. Fit the pressure tapping cap to the weakening device, fit a new sealing washer if necessary.

13. Remove the blank from the air diverter valve and connect the feed hose from the air pump to the diverter valve.

14. Remove the blank from the cut-off solenoid 'Y' piece hose connection and connect the E.G.R. signal pipe to the solenoid connection.

15. Start the engine and check the idle speed, this should be 650 r.p.m.; adjust by means of the idle stop screw (refer to Section U6).

16. Stop the engine, remove the air intake and discard the blank from the hot idle compensator feed drilling; fit the air intake.

17. Remove the impulse tachometer.

Section U6

Ignition system

Printed in England
© Rolls-Royce Motors Limited 1980

Data

Ignition timing 9°B.T.D.C. (Initial static setting)
15° B.T.D.C. at 1 200 r.p.m.
7° - 13° B.T.D.C. at idle speed (650 r.p.m.) (Approach 1 200 r.p.m. from a higher speed).

Ignition control system

The ignition system utilises an Opus distributor (in which an oscillator pick-up and control unit replace the conventional contact breaker), a high load ignition coil and a ballast resistor. The control unit comprises an electronic oscillator, amplifier and power transistor.

A drum with eight ferrite rods (one per cylinder) moulded into the outer edge is mounted onto the distributor drive-shaft. As the drum rotates a voltage is created each time a ferrite rod passes the oscillator pick-up, this signal is then amplified and used to switch off the normally conducting power transistor in the primary coil circuit thus inducing a high voltage in the secondary winding which is distributed to the sparking plugs in the normal manner.

The distributor has a conventional centrifugal advance mechanism.

The Opus distributor provides increased accuracy of timing and increased service life before maintenance is required.

For the removal and fitting instructions of the ignition system components refer to Chapter M.

Ignition - To time (using a stroboscope)

The ignition is timed on A1 cylinder which is located at the front left-hand side of the engine (viewed from the front of the car).

Note

If the ignition timing is to be set, ensure that the sparking plugs are in good condition before running the engine; if they require cleaning or renewal the sparking plugs gap should be set to 0,9 mm. (0.035 in.).

1. To check the ignition timing commence by running the engine until normal operating temperature is attained and the choke fast-idle is in the off position. Switch off the engine.
2. Connect a stroboscope and a tachometer to the engine as described in the instructions supplied with the respective equipment.
3. Start the engine and adjust the throttle stop screw to give an idle speed of 1 200 r.p.m. When setting the engine idle speed reduce from a higher speed to 1 200 r.p.m.
4. Direct the flashing light of the stroboscope onto the crankshaft damper timing marks and timing pointer; the pointer is positioned on the right-hand side of the crankshaft damper when viewed from the front of the engine.
5. If the timing pointer does not coincide with the 15° B.T.D.C. mark on the crankshaft damper adjust the ignition timing as follows.
6. Release the clamp screw on the distributor and rotate the head of the distributor in the appropriate direction until the correct timing is obtained. Clockwise rotation of the distributor head advances the ignition and conversely anti-clockwise rotation retards the ignition. After adjustment has been carried out tighten the clamp screw and again check to ensure that the timing has not altered whilst tightening the clamp screw.
7. Set the engine idle speed to 650 r.p.m.
8. Direct the flashing light of the stroboscope onto the crankshaft damper timing marks and timing pointer. Check that the ignition timing is approximately 7° - 13° B.T.D.C.
9. Stop the engine and remove all the test equipment.

Setting the engine idle speed

Ensure that the engine is at normal operating temperature and that the choke fast-idle is in the off position.

The air conditioning system must be switched off and a tachometer connected to the engine in accordance with the manufacturer's instructions.

1. Stop the engine, remove the air intake and blank off the hot idle compensator feed drilling (see Fig. U33); replace the air intake.
2. Start the engine and, if necessary, adjust the engine idle speed to 650 r.p.m. using the throttle stop screw.
3. Stop the engine and remove the air intake. Remove the blank from the hot idle compensator feed drilling and fit the air intake. Detach the test equipment.

Distributor maintenance

The distributor requires no routine maintenance except that, at the mileage intervals specified in the Service Schedules, the moulded cover and H.T. rotor arm should be removed and the spindle shaft

March 1980
TSD 4200
Australia
1980 Model Year)

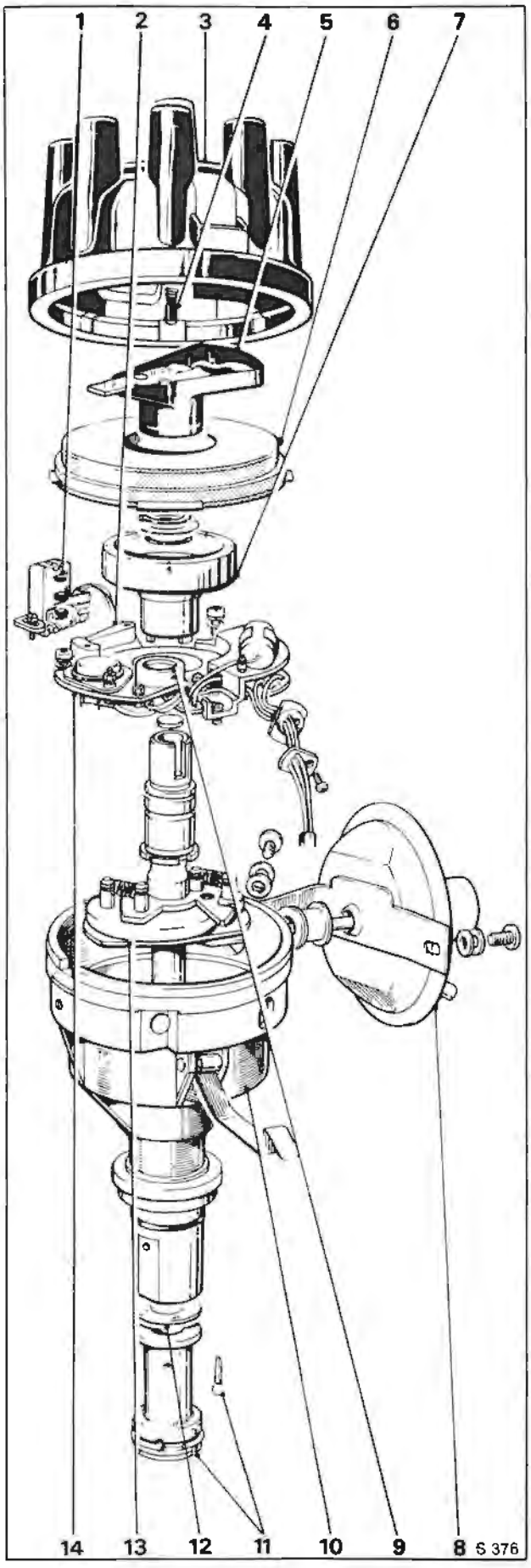

bearings lubricated by inserting a few drops of engine oil onto the felt pad. The automatic advance mechanism should also be lubricated at this time with a few drops of engine oil inserted through apertures in the base plate.

Sparking plugs

The sparking plugs approved for this car are Champion RN 14Y. Before fitting the plugs, set the gaps with the aid of a feeler gauge to 0,9 mm. (0.035 in.) and lightly smear the threads with 'Graphogen' grease.

Fig. U34 Ignition distributor

1 Pick-up module
2 Pick-up arm
3 Distributor cover (cap)
4 High tension brush and spring
5 Rotor arm
6 Flash over shield (dust cover)
7 Timing rotor
8 Vacuum advance unit
9 Control unit
10 Distributor body
11 Driving dog and pin
12 Thrust washer
13 Automatic advance mechanism
14 Electronic module assembly

Section U7

Electrical components

The electrical components described in this section would normally appear in Chapter M - Electrical system, however, as they are used in connection with the emission control system it is thought more practical to include the information in this Chapter.

The components concerned are as follows.

E.G.R. system and Weakening system cut-out switch
Anti 'run-on' solenoid
E.G.R. system and Weakening system cut-off solenoid
Kickdown and Full throttle E.G.R. cut-out micro-switch

E.G.R. system and Weakening system cut-out switch

The bi-metal cut-out switch is situated in the side of the air intake elbow adjacent to the choke stove take-off pipe and 'B' bank carburetter (see Fig. U35).

E.G.R. system and Weakening system cut-out switch - To remove

1. Withdraw the protective sheath and detach the electrical connections, noting the position of the connections to assist identification on assembly.
2. Unscrew and remove the three setscrews and spring washers.
3. Withdraw the cut-out switch.

E.G.R. system and Weakening system cut-out switch - To fit

Fit the cut-out switch by reversing the procedure given for removal.

1. Ensure that the gasket is in a good condition.
2. The setscrews must be fitted with spring washers.
3. The protective sheath must be fitted over the electrical connections.

E.G.R. system and Weakening system cut-out switch circuit wiring - To check

1. Detach the electrical connection from the E.G.R. and Weakening systems cut-out switch.
2. Attach one side of a test lamp to the White cable in the connection block and the other side to a good earth.
3. Switch on the ignition noting that the test lamp bulb illuminates.
4. Switch off the ignition noting that the test lamp bulb extinguishes.

E.G.R. system and Weakening system cut-out switch - To check

1. Withdraw the protective sheath from the electrical connections.
2. Do not disturb any wiring but connect both electrical connections via a test lamp.
3. Ensure that the engine is cold [i.e. intake air temperature below approximately 14° C. (57° F.)] and switch on the ignition.

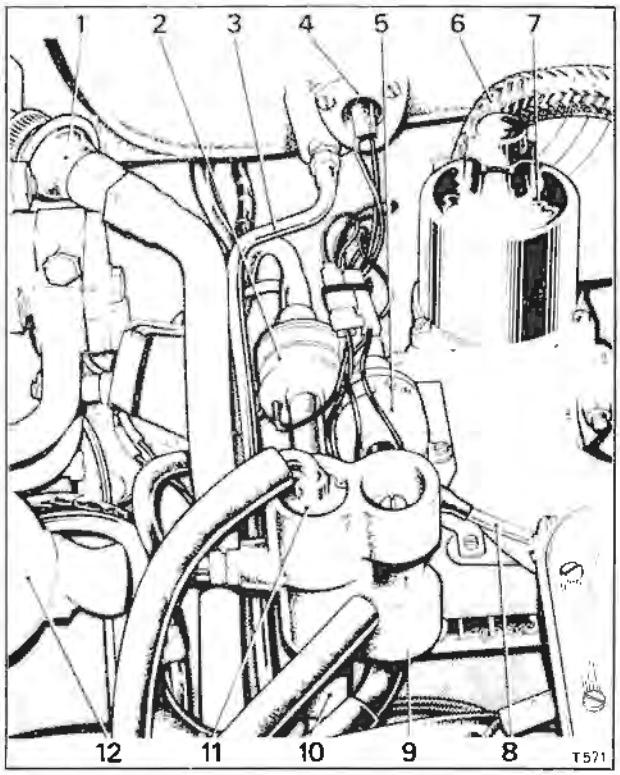

Fig. U35 Solenoid platform

1 Check valve
2 Anti 'run-on' solenoid
3 Choke stove pipe
4 E.G.R. system and Weakening system cut-out switch
5 E.G.R. system and Weakening system cut-off solenoid
6 Exhaust gas distribution pipe
7 'B' bank carburetter
8 E.G.R. signal hose
9 Mixture weakening device
10 Fuel receiver
11 Float chamber vent valve
12 Engine oil filler cap

Printed in England
© Rolls-Royce Motors Limited 1980

4. Check that the test lamo bulb is illuminated.
5. Start and run the engine; as the engine warms-up [i.e. the inlet air temperature exceeds approximately 14° C. (57° F.)] the test lamp bulb should extinguish.

Anti 'run-on' solenoid

The anti 'run-on' solenoid is situated on a platform adjacent to 'B' bank carburetter; it is the foremost of the two solenoids fitted on the platform.

The use of low octane fuel often causes an engine to 'diesel' (i.e. to continue to run-on after the ignition has been switched off, particularly when the engine is hot). To prevent this an anti 'run-on' solenoid is fitted between the fuel receiver and the induction manifold (see Figs. U4 and U35). When the ignition is switched off the solenoid valve opens and connects the weakening system to the induction manifold, thus creating a high depression in the float chambers which cuts off the fuel supply.

Anti 'run-on' solenoid - To remove

1. Disconnect the rubber hose from either side of the solenoid.
2. Disconnect the two electrical leads at their electrical connections.
3. Unscrew and remove the two screws situated one on either side of the solenoid body.
4. Withdraw the anti 'run-on' solenoid.

Anti 'run-on' solenoid - To fit

Fit the anti 'run-on' solenoid by reversing the procedure given for removal.

Anti 'run-on' solenoid circuit wiring - To check

1. Connect a test lamp across the two electrical connections to the solenoid. **Do not disconnect the two connections.**
2. Switch on the ignition and check that the test lamp bulb illuminates.
3. Switch off the ignition and check that the test lamp bulb is extinguished.

Anti 'run-on' solenoid - To check

1. Ensure that the usual safety precautions are carried out (i.e. parking brake firmly applied, gear range selector lever in 'Park', etc.).
2. Connect an impulse tachometer in accordance with the manufacturer's instructions.
3. Detach the weakening device pressure tapping cap (see Fig. U19) and connect a manometer capable of reading 0 to 15,24 cm. (0 to 6 in.) of water to the tapping.
4. Disconnect the carburetter vacuum signal to the E.G.R. valves at the cut-off solenoid end of the hose. Blank off the signal hose.
5. Start and run the engine at the idle speed setting (650 r.p.m.).
6. Switch off the engine and observe the reading on the manometer. The reading should momentarily increase to approximately 15,24 cm.(6.0 in.) as the engine stops.
7. If the reading does not increase, the operation of the anti 'run-on' solenoid is incorrect.

This could be caused by the following.

a. A blockage in the hose (see Fig. U19) from the anti 'run-on' solenoid to the weakening device.
b. A blockage in the hose (see Fig. U19) from the anti 'run-on' solenoid to the vacuum manifold or in the vacuum manifold.
c. Incorrect wiring to the anti 'run-on' solenoid.
d. Faulty anti 'run-on' solenoid.

E.G.R. system and Weakening system cut-off solenoid

The E.G.R. system and weakening system cut-off solenoid is the rearmost of the two solenoids mounted on the platform adjacent to 'B' bank carburetter (see Figs. U4 and U35).

E.G.R. system and Weakening system cut-off solenoid - To remove

1. Detach the electrical connections, noting the position of the connections to assist identification when assembling.
2. Detacn the rubber hose from either side of the solenoid.
3. Unscrew the two 'cheese-headed' mounting screws and withdraw the solenoid.

E.G.R. system and Weakening system cut-off solenoid - To fit

Fit the cut-off solenoid by reversing the procedure given for removal.

E.G.R. system and Weakening system cut-off solenoid circuit wiring - To check

1. Connect a test lamp across the two electrical connections to the solenoid. **Do not disconnect the two connections.**
2. Ensure the engine is cold.
3. Switch on the ignition and start the engine noting that the bulb of the test lamp is illuminated.
4. Run the engine; noting that as the engine warms-up [the inlet air temperature reaches approximately 14° C. (57° F.)] the test lamp bulb should extinguish.
5. Stop the engine and allow to cool, noting that when the engine becomes cold [the air in the intake drops to a temperature of approximately 12° C. (54° F.)] the test lamp bulb again illuminates.

E.G.R. system and Weakening system cut-off solenoid - To check

1. Detach the carburetter vacuum signal to weakening system cut-off solenoid hose at the solenoid and blank off the hose.

Connect a suitable length of hose to the solenoid connection.

2. Clean the open end of the additional hose.

3. Switch on the ignition.
4. Place the hose in the mouth and apply pressure.
5. If the operation of the solenoid is correct note that the following conditions apply.
a. With a cold engine [i.e. the inlet air temperature below approximately 14° C. (57° F.)] blowing air through the hose **should not** be possible.
b. As the engine warms-up [i.e. an inlet air temperature of approximately 14° C. (57° F.) or above] blowing air through the hose should be possible.
c. As the engine again cools [i.e. the inlet air temperature drops below approximately 12° C. (54° F.)] the conditions described in (a) should again apply.

Kickdown and Full throttle E.G.R. cut-out micro-switch

This micro-switch is situated on the underside of the car body below the accelerator pedal, it is a dual purpose micro-switch providing kickdown (detent) for the torque converter transmission and cut-out for the E.G.R. system.

Kickdown and Full throttle E.G.R. cut-out micro-switch - To remove

1. Drive the car onto a ramp and raise to a suitable working height.
2. From inside the car, locate the micro-switch operating plunger beneath the accelerator pedal.
3. Unscrew the large retaining nut and withdraw the washer.
4. From under the car detach the 'Lucar' connections and withdraw the micro-switch assembly.

Kickdown and Full throttle E.G.R. cut-out micro-switch - To dismantle

The assembly comprises the micro-switch, plunger and casing, the assembly should be removed from the car before any dismantling is commenced.
1. Using a screwdriver carefully 'ease back' the indentations which crimp around the cover of the assembly.
2. Remove the cover.
3. Disconnect the two electrical cables from the micro-switch. The White/Green cable has a 'Lucar' connection and the White cable is retained by a small cheesehead screw.
4. Unscrew the two 6 B.A. nuts securing the micro-switch to its mounting bracket. Withdraw the cheesehead screws and collect the two washers from each screw. Withdraw the micro-switch.
5. Unscrew the two cheesehead screws retaining the micro-switch mounting bracket. Withdraw the bracket.
6. Remove the circlip from around the plunger assembly.
7. Withdraw the plunger assembly and spring.

Kickdown and Full throttle E.G.R. cut-out micro-switch - To assemble

Assemble the micro-switch and plunger by reversing the procedure given for dismantling noting the following points.
1. Ensure that the rubber seal is in a good condition and fitted securely to the body of the assembly. The seal is secured using Dunlop Adhesive S1240 or equivalent.

Kickdown and Full throttle E.G.R. cut-out micro-switch - To set

1. Ensure that the carburetter linkage (refer to Section U5) and the accelerator pedal linkage (refer to Section K7) are correctly set. Swing the micro-switch towards the base of the plunger until a 0,254 mm. to 0,762 mm. (0.010 in. to 0.030 in.) gap exists between the micro-switch button and the plunger.
2. Tighten the micro-switch securing nuts and afterwards, check that the gap set in Operation 1 has not been disturbed.
3. Slowly depress the plunger to obtain full stroke. Check that the switch operates (audible click) during this operation.
4. Ensure that with the main plunger fully depressed it is still clear of the micro-switch case (see Fig. U36).
5. Slowly release the plunger ensuring that the

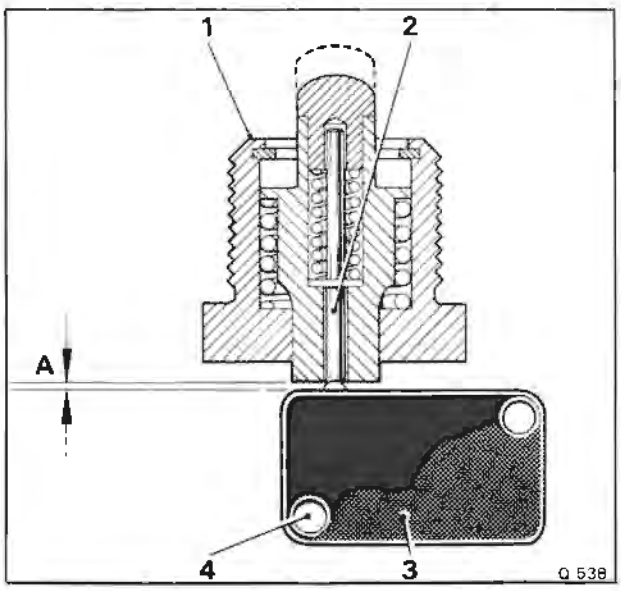

Fig. U36 Kickdown and Full throttle E.G.R. cut-out micro-switch
1 Kickdown and Full throttle E.G.R. cut-out micro-switch
2 Secondary plunger
3 Micro-switch
4 Elongated hole in mounting plate (micro-switch adjustment)
A Clearance of 0,127 mm. (0.005 in.)

Printed in England
© Rolls-Royce Motors Limited 1980

micro-switch contacts open (audible click).
6. Ensure that the clearance set between the plunger and the micro-switch button, remains as set in Operation 1.

Kickdown and Full throttle E.G.R. cut-out micro-switch - To check
To check the circuit wiring and micro-switch operation for full throttle E.G.R. cut-off proceed as follows.
1. Carry out Operations 1 to 4 inclusive under the heading 'E.G.R. system and Weakening system solenoid circuit wiring - To check'.
2. Stop the engine and depress the accelerator to activate the micro-switch.
3. Ensure that the test lamp bulb is illuminated whilst the full throttle position is maintained with the accelerator pedal.

Section U8

Fault diagnosis

Symptoms	Possible Cause
1. Engine will not start. (Starter motor operating)	1. (a) Ignition circuit broken. (b) Failed anti 'run-on' solenoid or failure of electrical supply circuit. (c) Ignition system faulty. (d) Damaged or contaminated ignition high tension circuit. (e) Blocked fuel feed line or fouled float chamber filters. (f) Faulty choke bi-metal coil. (g) Choke solenoid inoperative. (h) Faulty choke 'fast-idle' mechanism. (i) Air leak into induction system. (j) Faulty hot idle mixture compensator. (k) Weakening device filter blocked, weakening device air intake non-return valve failed or blockage in rubber connecting hoses. (l) Faulty weakening device cut-off solenoid or failure of electrical supply circuit. (m) Faulty weakening device control switch or failure of electrical supply circuit. (n) Dislodged venturi in weakening device. (o) Flooding of carburetter float chamber or jet. (p) Exhaust gas recirculation valve(s) failed.
2. Engine idles very roughly.	2. (a) Ignition system faulty. (b) Fouled sparking plugs. (c) Damaged or contaminated ignition high tension circuit. (d) Air leak into induction system. (e) Faulty hot idle mixture compensator. (f) Weakening device filter blocked, weakening device air intake non-return valve failed or blockage in rubber connecting hoses. (g) Badly worn or damaged carburetter control linkage. (h) Flooding of carburetter float chamber or jet. (i) Sticking carburetter piston. (j) Incorrect operation of carburetter jet compensation. (k) Fouled carburetter float chamber or jet. (l) Exhaust gas recirculation valve(s) failed. (m) Incorrect operation of temperature controlled a intake system. (n) Fouled fuel recirculation restrictor (if fitted).
3. Engine stalls.	3. (a) Ignition circuit broken. (b) Failed anti 'run-on' solenoid or failure of electrical supply circuit. (c) Ignition system faulty. (d) Damaged or contaminated ignition high tensio circuit.

Printed in England
© Rolls-Royce Motors Limited 1980
March 1980
TSD 4200
(Australia - 1980 Model Year)

Symptoms	Possible Cause
3. Engine stalls (continued)	(e) Blocked fuel feed line, fouled float chamber filters, or fouled fuel recirculation restrictor (if fitted). (f) Air leak into induction system. (g) Faulty hot idle mixture compensator. (h) Weakening device filter blocked, weakening device air intake non-return valve failed or blockage in rubber connecting hoses. (i) Badly worn or damaged carburetter control linkage. (j) Flooding of carburetter float chamber or jet. (k) Sticking carburetter piston. (l) Incorrect operation of carburetter jet compensation. (m) Fouled carburetter float chamber or jet. (n) Exhaust gas recirculation valve(s) failed.
4. (i) Engine shows signs of power loss evident at high speeds and loading. (ii) Engine misfires particularly on hard acceleration from low speed.	**4.** (a) Ignition system faulty. (b) Fouled sparking plugs. (c) Damaged or contaminated ignition high tension circuit. (d) Blocked fuel feed line or fouled float chamber filters. (e) Choke system operation incorrect. (f) Sticking carburetter piston. (g) Fouled carburetter float chamber or jet. (h) Faulty exhaust gas recirculation full throttle cut-out switch or failure of electrical supply circuit. (i) Exhaust gas recirculation valve(s) failed. (j) Fouled exhaust gas recirculation valves cut-off solenoid or electrical supply circuit.
5. Engine hesitates or misfires under light load.	**5.** (a) Failed anti 'run-on' solenoid or failure of electrical supply circuit. (b) Ignition system faulty. (c) Fouled sparking plugs. (d) Damaged or contaminated ignition high tension circuit. (e) Blocked fuel feed line or fouled float chamber filters. (f) Air leak into induction system. (g) Faulty hot idle mixture compensator. (h) Weakening device filter blocked, weakening device air intake non-return valve failed or blockage in rubber connecting hoses. (i) Dislodged venturi in weakening device. (j) Flooding of carburetter float chamber or jet. (k) Incorrect operation of carburetter jet compensation. (l) Fouled carburetter float chamber or jet. (m) Exhaust gas recirculation valve(s) failed. (n) Incorrect operation of temperature controlled air intake system. (o) Faulty air diverter valve.
6. Increase in fuel consumption.	**6.** (a) Ignition system faulty. (b) Faulty choke bi-metal coil. (c) Choke system operation incorrect.

Symptoms	Possible Cause
6. Increase in fuel consumption (continued)	(d) Air leak into induction system. (e) Faulty hot idle mixture compensator. (f) Weakening device filter blocked, weakening device air intake non-return valve failed or blockage in rubber connecting hoses. (g) Faulty weakening device cut-off solenoid or failure of electrical supply circuit. (h) Faulty weakening device control switch or failure of electrical supply circuit. (i) Air leak in mixture weakening system. (j) Flooding of carburetter float chamber or jet. (k) Sticking carburetter piston. (l) Incorrect operation of carburetter jet compensation. (m) Incorrect purge flow rate. (n) Exhaust gas recirculation valve(s) failed. (o) Faulty air diverter valve. (p) Fouled fuel recirculation restrictor (if fitted).
7. Engine 'backfires' on overrun.	**7.** (a) Ignition system faulty. (b) Air leak into induction system. (c) Faulty hot idle mixture compensator. (d) Exhaust gas recirculation valve(s) failed. (e) Faulty air diverter valve.
8. Sudden increase in engine idle speed.	**8.** (a) Faulty choke fast-idle mechanism. (b) Failed carburetter overrun valve.
9. Excessive noise from air injection pump or system.	**9.** (a) Faulty or damaged air injection pump, relief or check valves, connecting hoses or pipes. (b) Faulty air diverter valve.

Printed in England

© Rolls-Royce Motors Limited 1980

Section U9

Workshop tools

Tool Number	Description
RH 8090	Pliers - wire hose clips
RH 8725	Flowmeter (rotameter type)
RH 8841	Dial gauge - carburetter piston lift
RH 8880	Setting jig - throttle levers
RH 8945	Connector - choke stove pipe
RH 9096	Fitting tool - 'A' bank mixture adjusting screw tamperproof seal
RH 9097	Fitting tool - 'B' bank mixture adjusting screw tamperproof seal
RH 9105	Kit - to adapt RH 8841 to fit S.U. HIF 7 carburetters

Printed in England
© Rolls-Royce Motors Limited 1980

March 1980
TSD 4200
(Australia
1980 Model Year)

Section U10

Running changes

Printed in England

© Rolls-Royce Motors Limited 1980

March 1980

TSD 4200
(Australia
1980 Model Year)

S 263

Printed in England

© Rolls-Royce Motors Limited 1977

January 1977

T.S.D. 4260

Chapter U

Emission control systems

Applicable to 1977 model year cars destined for Japan

Section

U1 Introduction
U2 Exhaust emission control system
U3 Fuel evaporation emission control system
U4 Crankcase emission control system
U5 Carburetters and Automatic choke system
U6 Ignition system
U7 Electrical components
U8 Fault diagnosis
U9 Workshop tools
U10 Running changes

Chapter U - 1977 Japan

Issue record sheet 1

November 1979

The dates quoted below refer to the issue date of individual pages within this chapter.

Section	U1	U2	U3	U4	U5	U6	U7	U8	U9	U10		
Page No.												
1	Jan 77	Jan 77	Jan 77	Jan 77	Jan 77	Nov 79	Jan 77	Jan 77	Jan 77	Jan 77		
2	Jan 77	Jan 77	Jan 77	Jan 77	Jan 77	Nov 79	Jan 77	Jan 77				
3	Jan 77	Jan 77	Jan 77		Jan 77		Jan 77	Jan 77				
4	Jan 77	Jan 77	Jan 77		Jan 77		Jan 77					
5		Nov 79	Jan 77		Jan 77		Jan 77					
6		Nov 79	Jan 77		Jan 77		Jan 77					
7		Jan 77	Jan 77		Jan 77		Jan 77					
8		Jan 77	Jan 77		Jan 77							
9			Jan 77		Jan 77							
10			Jan 77		Jan 77							
11					Jan 77							
12					Jan 77							
13					Jan 77							
14												
15												
16												
17												
18												
19												
20												
21												
22												
23												
24												
25												
26												
27												
28												
29												
30												
31												
32												
33												
34												
35												
36												
37												
38												
39												
40												
41												
42												
43												
44												
45												
46												
47												
48												

Printed in England
© Rolls-Royce Motors Limited 1979

Section U1

Introduction

This Chapter has been written specifically for cars fitted with Emission Control Systems conforming to the Japanese emission control regulations, applicable to 1977 model year new motor vehicles.

It is important therefore that Service Personnel fully understand the contents of this Chapter so that the special servicing can be correctly carried out.

Rolls-Royce and Bentley motor cars conforming to the above regulations and produced to the 1977 model year specification can be readily identified as follows.

1. A 1977 date of manufacture plate located on the bulkhead.

Engine compartment

Figures U2 and U3 overleaf show the location of the major emission control system components within the engine compartment.

Hose routing diagram

Figure U4 within the Introduction section gives details of the various hose 'runs' and connections in and around the engine compartment, that are associated with the emission control systems components.

Torque tightening

When fitting the various emission control systems components, ensure that the securing nuts and set-screws are tightened to the torque figures given in Chapter P, unless otherwise stated in this Chapter.

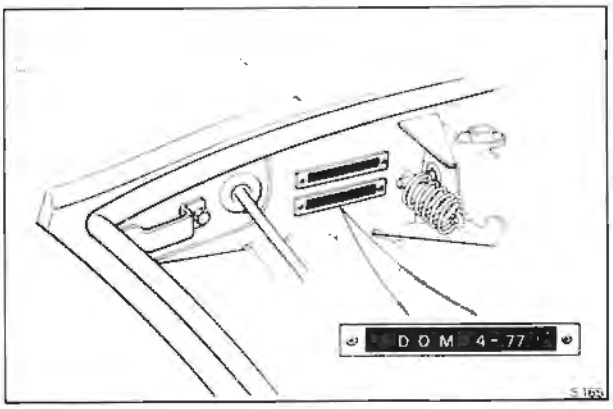

Fig. U1 Date of manufacture plate

Printed in England
© Rolls-Royce Motors Limited 1977
January 1977
T.S.D. 4200
(Japan)

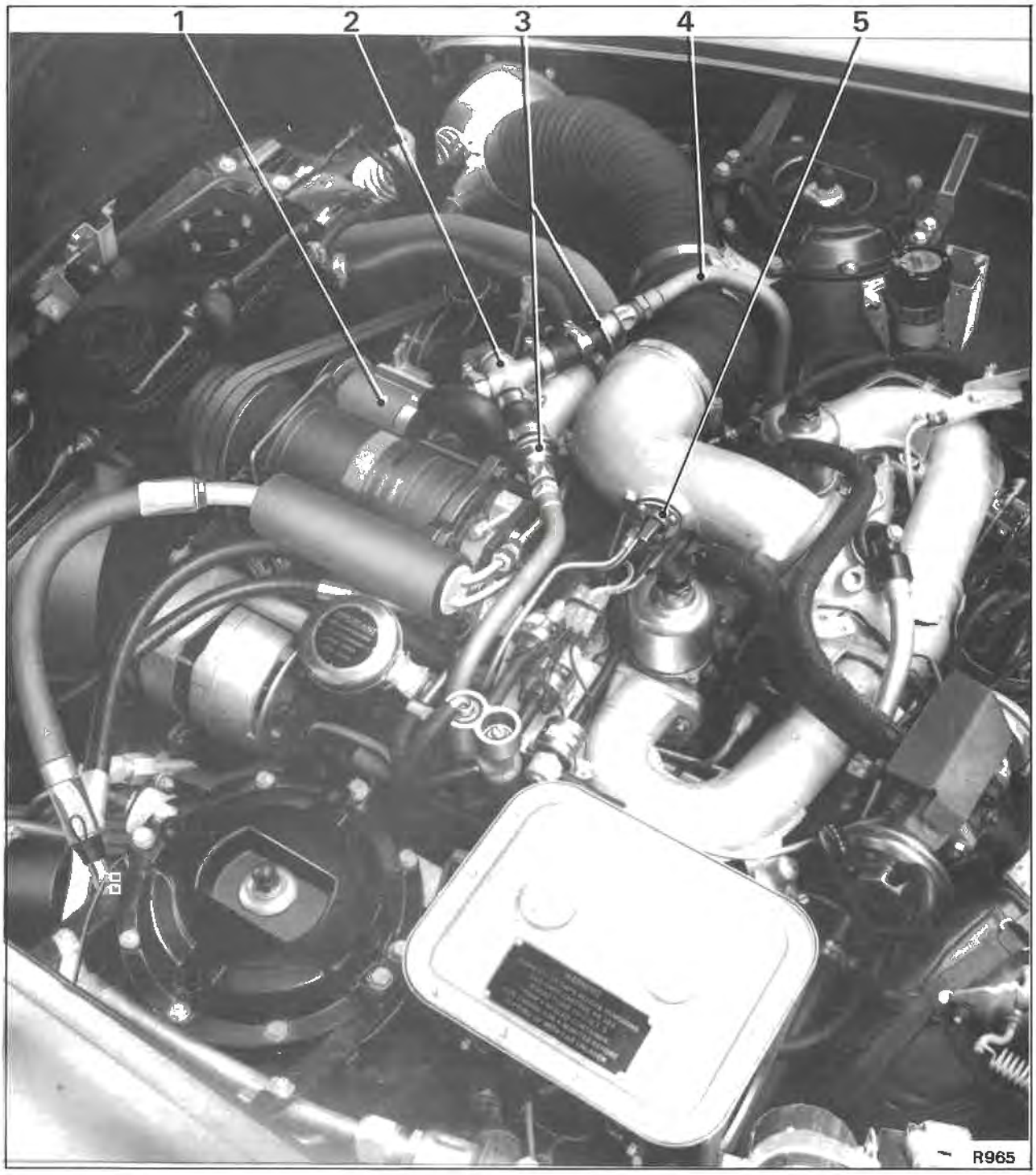

Fig. U2 Engine compartment details (L.H. side)

1 Air pump
2 Connection block and relief valve
3 Check valves
4 'A' bank air manifold
5 Weakening device cut-out switch

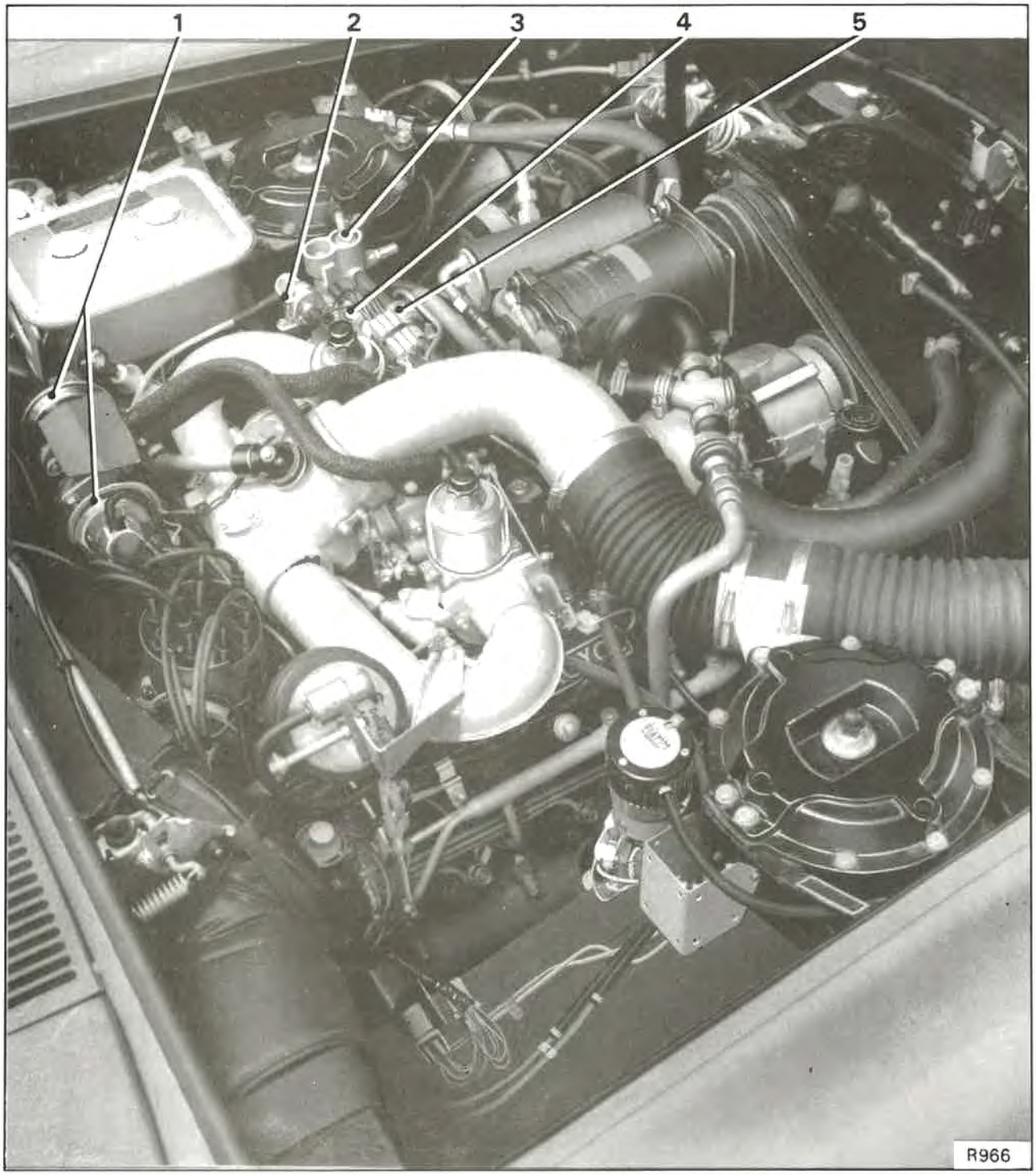

Fig. U3 Engine compartment details (R.H. side)

1 Exhaust gas recirculation valves
2 Exhaust gas recirculation cut-off solenoid
3 Weakening device assembly
4 Weakening device cut-off solenoid
5 Anti 'run-on' solenoid

Printed in England
© Rolls-Royce Motors Limited 1977

January 1977
T.S.D. 4200
(Japan)

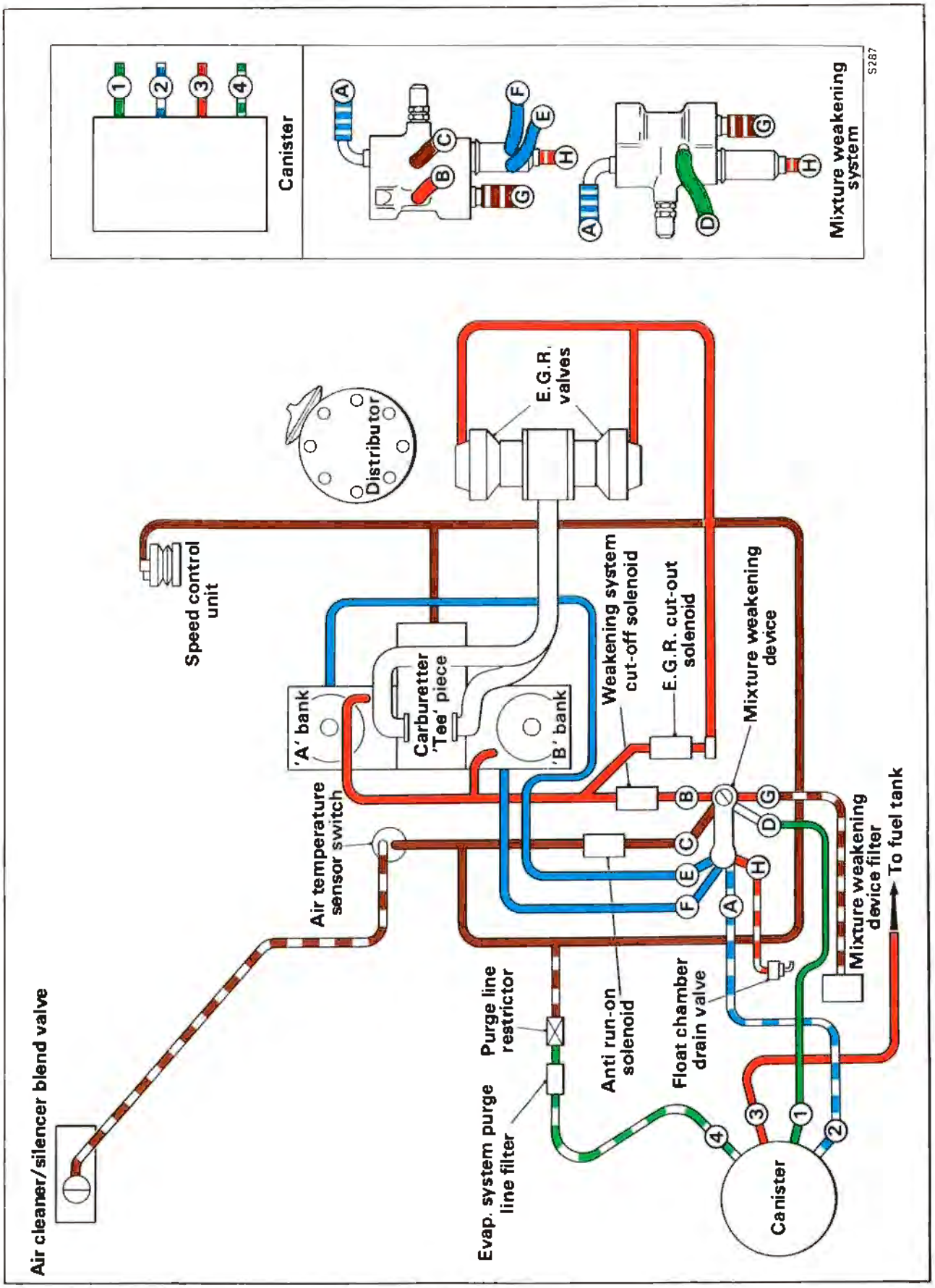

Fig. U4 Hose routing diagram - 1977 model year cars

Section U2

Exhaust emission control system

The Exhaust Emission Control System is designed to reduce the carbon monoxide, unburnt hydrocarbon and oxides of nitrogen content in the exhaust gases.

The system does not eliminate the danger caused by inhaling exhaust gases in a confined area.

Air from the atmosphere is drawn into the engine driven air injection pump through a centrifugal filter. From the pump, a quantity of air proportional to engine speed passes via a three-way connection block (containing a relief valve), through check valves to the air manifolds and then into the exhaust ports. This air combines with the exhaust gases discharged from the combustion chambers and promotes the oxidation process in the exhaust system and catalytic converters. The gases then pass through the exhaust system to atmosphere.

In addition, a proportion of the exhaust gas from the exhaust balance pipe situated between the two downtake pipes, is recirculated through vacuum operated metering valves into the carburetter 'tee' piece, just downstream of the throttle plates. The recirculated exhaust gas mixes with the inlet charge of fuel/air mixture in the induction manifold and is distributed to the cylinders, lowering the peak combustion temperature and reducing oxides of nitrogen emissions.

Before commencing work on the exhaust emission control system, care should be taken to ensure that the relevant components are not hot.

The system is illustrated in Figure U5 and comprises the following main components.

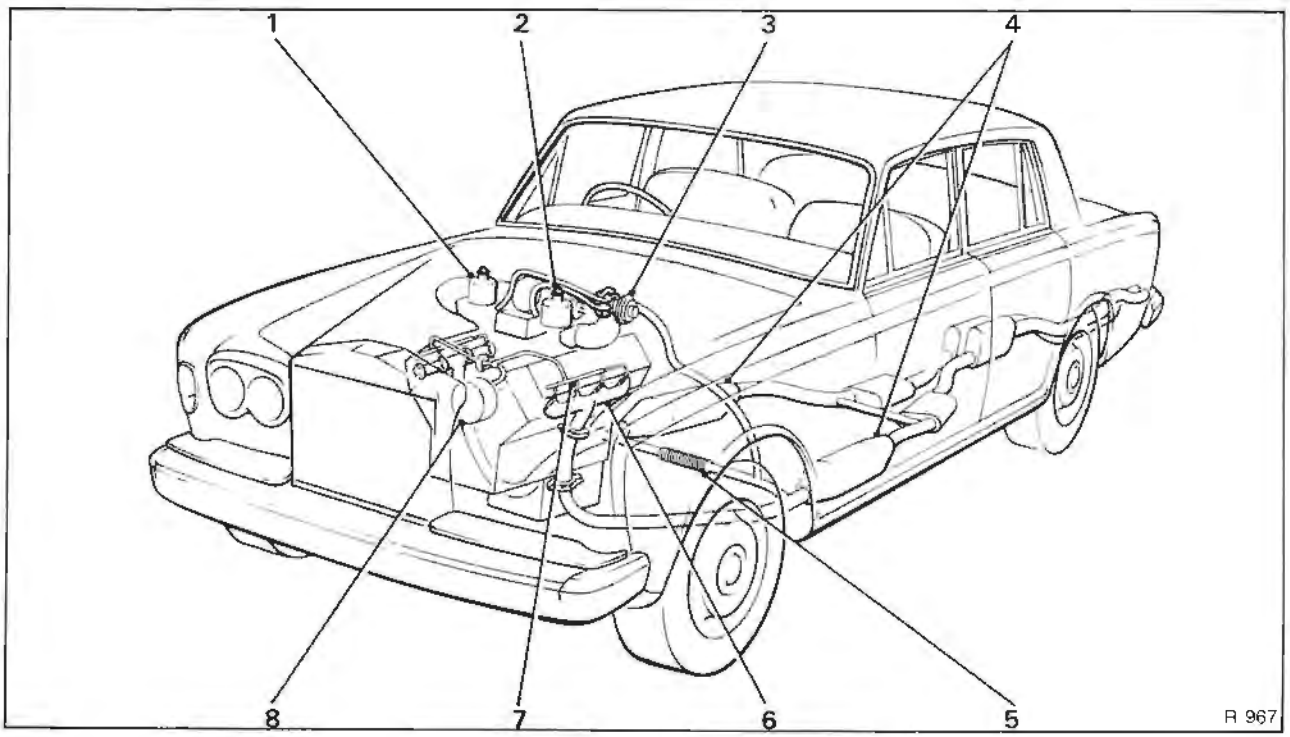

Fig. U5 Exhaust emission control system

1 'A' bank carburetter
2 'B' bank carburetter
3 Exhaust gas recirculation valves
4 Catalytic converters
5 Exhaust system balance pipe
6 'B' bank exhaust manifold
7 'B' bank air manifold
8 Air pump

Printed in England
© Rolls-Royce Motors Limited 1977
January 1977
T.S.D. 4200 (Japan)

Air injection system (see Fig. U6)
Air manifolds
Air pump
Check valves
Centrifugal air filter
Pressure relief valve
Three-way connection block

Exhaust gas recirculation system (E.G.R.) (see Fig. U9)
Cut-off solenoid (see Section U7)
Cut-out switch (see Section U7)
Distribution pipes
E.G.R. valves
E.G.R. valves heatshield
Feed pipe
Full throttle cut-out micro-switch (see Section U7)

Exhaust system (see Figs. U5 and U12)
Catalytic converters (For details of the Exhaust system refer to Chapter Q).

For details of the servicing and maintenance requirements of the Exhaust Emission Control System, refer to the Service Schedules Manual - T.S.D. 4117.

Air injection system (see Figs. U5 and U6)
A detailed description of the air injection system is given at the beginning of this section.

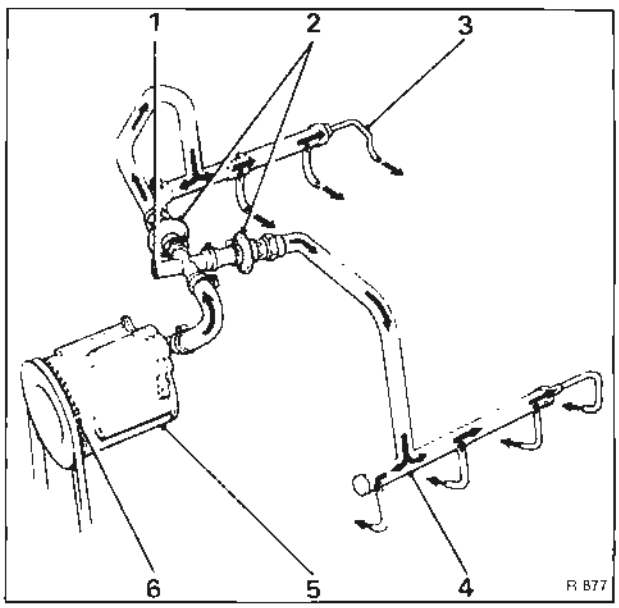

Fig. U6 Air injection system
1 Relief valve
2 Check valves
3 'A' bank air manifold
4 'B' bank air manifold
5 Air pump
6 Air pump intake

Air injection system - To test
1. Connect an electric impulse tachometer to the engine in accordance with the manufacturer's instructions.
2. Start and run the engine at a constant speed of 2 000 r.p.m., check that air does not escape from the relief valve.
3. If air does escape during Operation 2, check that the correct (blue) setting plug is fitted to the pressure relief valve.
4. If the system does not operate as described in Operation 2, stop the engine and fit a new three-way connection block assembly (containing the pressure relief valve).
5. Repeat Operation 2.
6. Stop the engine and remove the test equipment.

Air injection system - Leak check
Check the air injection system for air leaks by carrying out the following sequence of operations.
1. Ensure that the ignition is switched off.
2. Visually inspect the condition of all hoses, pipes and joints associated with the air injection system.
3. Ensure that all worm drive clips are tight.
4. Start the engine and listen carefully for any evidence of an air leak from the system.
5. If an air leak is suspected it is permissible to coat the component or hose with a soap solution; soap bubbles will confirm an air leak.

Air injection system - Fault diagnosis
To diagnose malfunctioning of the air injection system refer to Section U8 - Fault diagnosis.

Air manifolds
The air manifolds convey air from the check valves to the engine exhaust ports. One air manifold is fitted to each bank of cylinders and is identified as 'A' bank air manifold or 'B' bank air manifold.

To remove an air manifold, unscrew the check valve union and the four ⅜ in. A/F adapters in the cylinder head.

The 'A' bank air manifold is reasonably straight forward to withdraw but 'B' bank air manifold will require the disconnecting of several other hoses and pipes (e.g. choke stove pipes, fuel evaporation weakening device hoses and pipes, etc.), to facilitate withdrawal.

Fit the air manifolds by reversing the procedure given for removal, noting that the check valve union has a tapered thread. All the adapters in the cylinder head should be torque tightened to the figures given in Chapter P.

Air pump
The air pump is of the rotary vane type and is belt driven from the engine coolant pump. The centrifugal air filter is an integral part of the pump and is situated between the pump body and the pump driving pulley.

Air pump - To remove (see Fig. U7)

1. Disconnect the battery (refer to Chapter M).
2. Unscrew the worm drive clip and detach the hose from the pump to the three-way connection block, at the pump. Blank off the hose and pump connections to prevent the ingress of dirt, etc.
3. Slacken the two 9/16 in. A/F setscrews on the drive belt adjustment strut, remove the upper bolt.
4. Remove the drive belt from the pulley.
5. Support the air injection pump and unscrew and remove the 9/16 in. A/F mounting setscrew situated on the opposite side of the pump pulley.

Air pump - To fit

Fit the air pump by reversing the procedure for removal noting the following.

1. Ensure that the driving belt is adjusted so that an applied force of 5,5 kg. (12 lbs.) mid-way between the air injection pump pulley and the coolant pump pulley causes the belt to deflect 9,5 mm. (1.375 in.).

Air pump pulley

1. To remove, unscrew and remove the three set-screws situated around the centre of the pulley. Withdraw the pulley.
2. To fit the pulley, reverse the procedure given for removal ensuring that the setscrews are torque tightened to the correct figure (see Chapter P).

Check valves

The check valves are non-return valves (one-way valves) and one is fitted into the air injection system between the air pump and the air manifolds, for each bank of cylinders.

The check valves prevent the backflow of exhaust gases into the air lines or air pump, they operate whenever the exhaust back pressure exceeds the air pump delivery pressure at high speed and/or in the case of air pump drive belt failure.

To remove a check valve, slacken the worm drive clip situated on the air pump to check valve hose. Unscrew the union from the air manifold and withdraw the check valve. Fit a check valve in the reverse order.

Pressure relief valve (see Figs. U6 and U8)

The spring loaded pressure relief valve is permanently housed within the three-way connection block, its function is to allow excess air to escape from the air injection system when the check valves are closed. The relief valve prevents damage to the pump vanes and excess exhaust temperatures under extreme operating conditions.

If it becomes necessary to remove the pressure relief valve three-way connection block, slacken the worm drive clips on the three connecting hoses and withdraw the assembly.

To test the pressure relief valve, blank off the two connections for the check valves and apply pressure to the connection from the pump, ensure that the relief valve operates within the following acceptable limits.

0,5 kg/sq.cm. to 0,6 kg/sq.cm.
(7.4 lb/sq.in. to 8.4 lb/sq.in.)

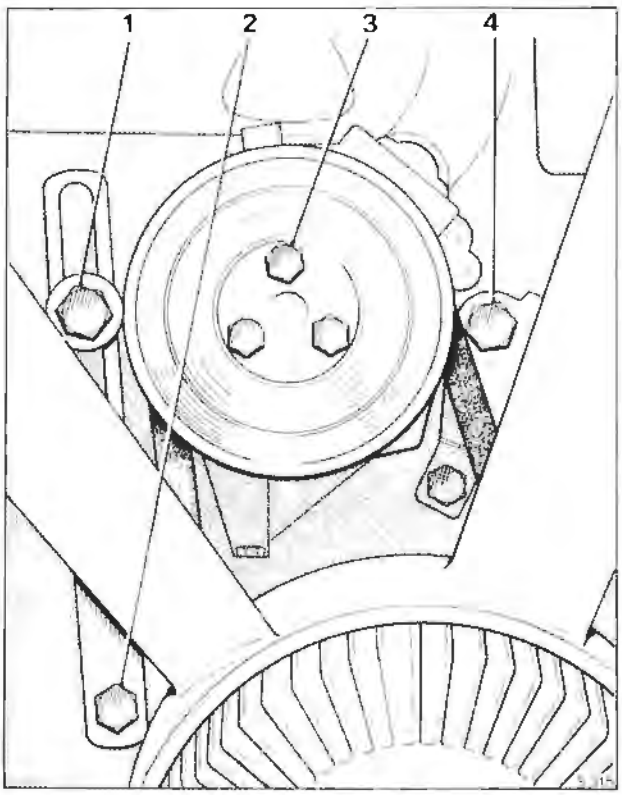

Fig. U7 Air injection pump

1 Adjustment strut upper setscrew
2 Adjustment strut pivot setscrew
3 Pulley retaining setscrews
4 Air pump mounting setscrew

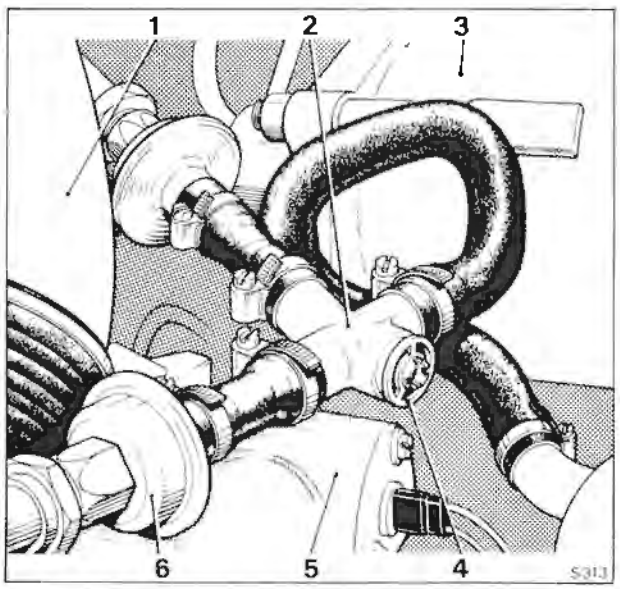

Fig. U8 Three-way connection block

1 Carburetter air intake
2 Three-way connection block
3 Refrigeration compressor
4 Air injection system pressure relief valve
5 Thermostat elbow
6 Check valve

Printed in England
© Rolls-Royce Motors Limited 1977

Exhaust gas recirculation system (E.G.R.)

(see Figs. U5 and U9)

A detailed description of the exhaust gas recirculation system (E.G.R.) is given at the beginning of this section.

Distribution pipes

The distribution pipes convey the recirculated exhaust gas from the E.G.R. valves into the carburetter 'tee' piece.

Distribution pipes - To remove

1. Using a 7/16 in. A/F spanner unscrew and remove the two nuts and washers securing the distribution pipes to the E.G.R. valve mounting block.
2. Unscrew the 7/16 in. A/F setscrews retaining the heatshield to 'B' bank air horn; collect the washers.
3. Ease the mounting block rearward to free the joint face; discard the gasket.
4. Support the weight of the distribution pipes.
5. Unscrew and remove the four 2 B.A. setscrews and washers securing the two distribution pipe flanges to the carburetter 'tee' piece.
6. Withdraw the distribution pipes and discard the gaskets.

Distribution pipes - To fit

Fit the distribution pipes by reversing the procedure given for removal, noting the following points.

1. Ensure that all joint faces are clean and free from carbon deposits.
2. Coat the joint faces and gaskets at the carburetter 'tee' piece with 'Wellseal'.

Distribution pipes - To clean

1. Remove the distribution pipes as described in Distribution pipes - To remove.
2. With a pointed scraper clean as much carbon deposit as possible from inside the distribution pipes and the joint faces. Particular attention should be given to the carburetter end of the pipes, because the majority of the carbon deposit will be found in this area.
3. Using wire brushes complete the cleaning operation on the distribution pipes.
4. With a pointed scraper remove the carbon deposits from the carburetter 'tee' piece connection orifices.
5. Before fitting the distribution pipes thoroughly blow-out the pipes and carburetter 'tee' piece connections with compressed air.
6. Fit the distribution pipes as described in Distribution pipes - To fit.

E.G.R. valves (see Fig. U10)

A proportional flow recirculation system is used. Exhaust gas from the balance pipe between the two downtakes of the dual exhaust system passes through twin metering orifices and is recirculated into the carburetter 'tee' piece. Atmospheric pressure is maintained downstream of the metering orifices by means of the control valves so that the recirculation flow is proportional to the relative effective areas of the metering orifices and the main exhaust system.

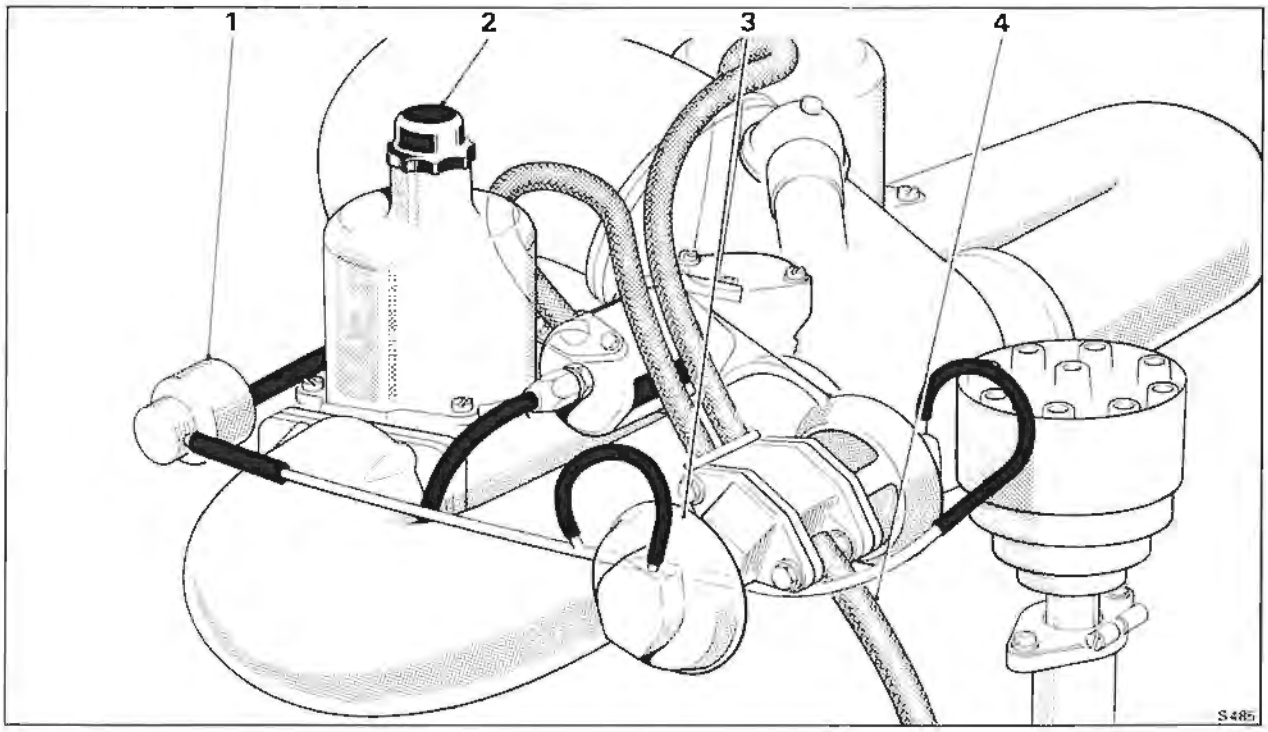

Fig. U9 Exhaust gas recirculation system

1 E.G.R. cut-off solenoid
2 'B' bank carburetter
3 E.G.R. valves
4 E.G.R. feed pipe

Dilution of the inlet charge with exhaust gas lowers the peak combustion temperature and reduces the formation of oxides of nitrogen.

Twin vacuum operated control valves each with an integral pressure transducer are used and the metering orifice of each valve is incorporated in an extension of the valve seat. A carburetter throttle gated vacuum signal is used to operate the valve. This signal is modulated by the integral transducer valve and applied to the control valve diaphragm so that the control valve lift is adjusted to maintain a constant control pressure, just above atmospheric pressure between the metering orifice and the control valve seat.

When the engine load is increased, the control pressure exceeds the transducer valve setting and the transducer valve closes applying the full vacuum signal to the control valve diaphragm and thus opening the control valve and increasing the E.G.R. flow. Similarly, as the engine load is reduced, the control pressure becomes less than the transducer valve setting and the transducer valve opens, venting the diaphragm chamber to atmosphere and causing the control valve to close and reduce the E.G.R. flow. The transducer valve constantly cycles adjusting the control valve lift to maintain a constant control pressure under all normal operation conditions.

The use of a throttle gated vacuum signal ensures complete control valve closure at idle to maintain good idle quality.

To improve starting and drive-away under low temperature conditions a solenoid valve (see Section U7) interrupts the carburetter vacuum signal to the E.G.R. valves until a predetermined air intake temperature is reached.

A micro-switch operated by the throttle lever (see Section U7) also controls this solenoid to provide E.G.R. cut-out at full throttle. At high engine speed the exhaust gas back pressure is high. As a result, the integral transducer valve directs full carburetter vacuum signal to the control valves. At high engine speed under full throttle operation the air intake restriction is sufficient to produce a carburetter vacuum signal large enough to open the control valves, this results in excessive flow under these conditions which would seriously degrade performance and reduce the safety margin for overtaking.

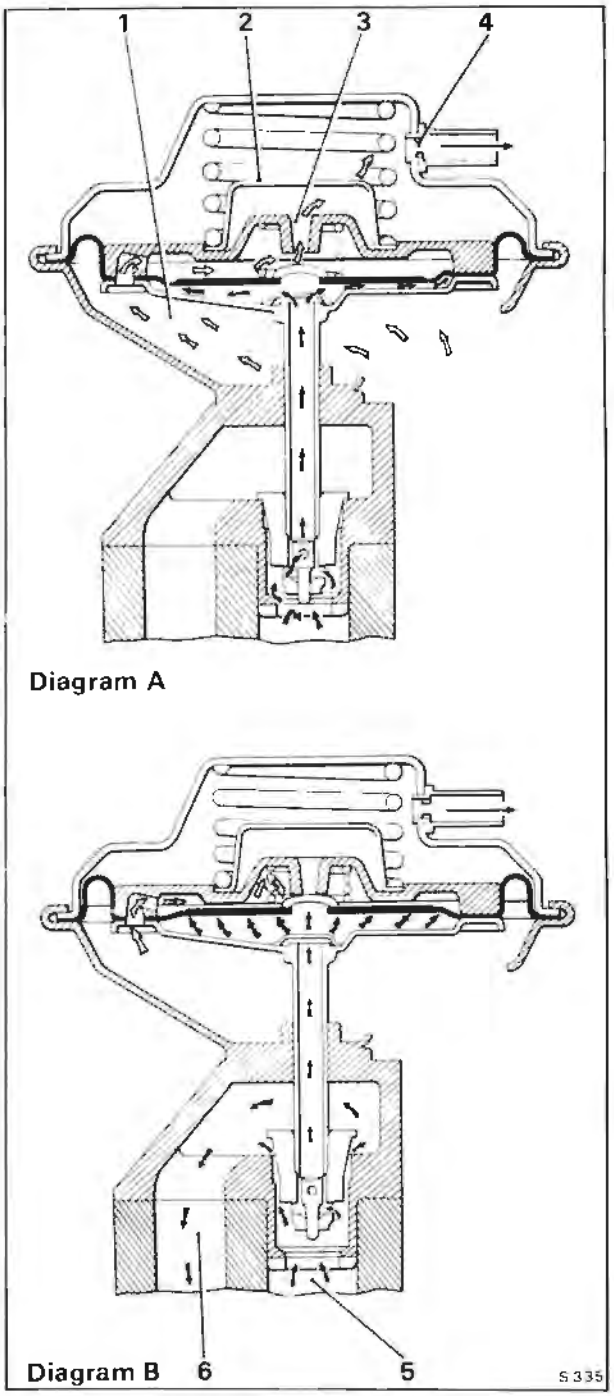

Fig. U10 Exhaust gas recirculation valve

Ambient air ⇦
Exhaust gas ⬅

Diagram A - Exhaust pressure below operating value

1 Ambient air
2 Air filter
3 Air bleed
4 Restrictor

Diagram B - Exhaust pressure above operating value

5 Exhaust gas from balance pipe
6 Exhaust gas to carburetter 'tee' piece

E.G.R. valves - To remove

1. Detach the small diameter rubber hose from the valve.

2. Unscrew and remove the two ⅜ in. A/F nuts retaining the valve to the mounting flange; collect the two washers.

3. Withdraw the valve and remove the gasket from the mounting flange.

4. Repeat Operations 1 to 3 inclusive on the second valve.

Printed in England
© Rolls-Royce Motors Limited 1979

November 1979
T.S.D. 4200
(Japan 1977 Model year)

E.G.R. valves - To fit
Fit the valves by reversing the procedure for removal, noting the following points.
1. Ensure that the valve pintle (see Fig. U10) is secure on the valve stem.
2. Ensure that the valve and mounting flange joint faces are clean and free from carbon deposits.
3. Alweys use a new mounting flange gasket.

E.G.R. valves - To clean
1. Remove the valves as described in E.G.R. valves - To remove.
2. Using a scraper, remove all carbon film from the valve and mounting flange faces; complete the operation with a wire brush.
3. Clean the carbon from the valves using a wire brush fitted into a portable drill. Take care not to damage the valve seating area.
4. Thoroughly blow out the valves with compressed air to ensure that all loose carbon particles are removed.
5. Upon completion of the cleaning operations, fit the valves to the engine mounting flange as described in E.G.R. valves - To fit.

E.G.R. valves - To check
The E.G.R. system is automatically controlled by exhaust backpressure to maintain a constant E.G.R. proportion over normal road load conditions. Checks to ensure the correct operation of the valves are only required under no load conditions as follows.

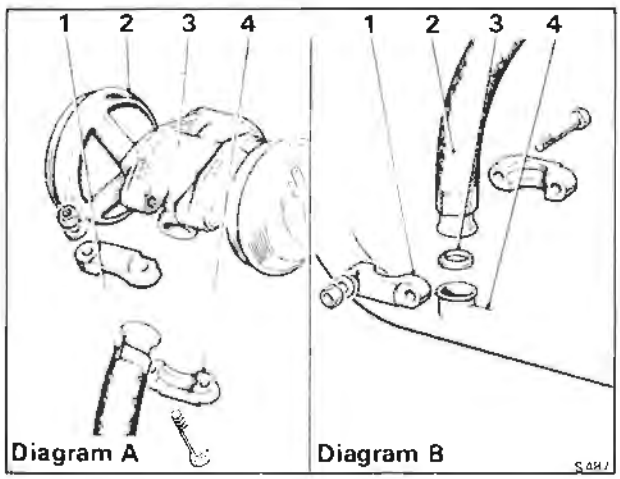

Fig. U11 E.G.R. feed pipe joints
Diagram A - Upper joint
1 Feed pipe
2 E.G.R. valve
3 E.G.R. valve mounting block
4 Clamp bracket
Diagram B - Lower joint
1 Clamp bracket
2 Feed pipe
3 Sealing ring
4 Exhaust balance pipe

1. Connect an electric impulse tachometer to the engine in accordance with the manufacturer's instructions.
2. Ensure that the parking brake is firmly applied and that the gear range selector is in the Park position.
3. Ensure that the pressure tapping cap fitted to the weakening device is correctly tightened.
Start and run the engine until normal operating temperature is attained.
4. Ensure that the engine has run for at least 25 mins. after the engine coolant thermostat has opened.
5. Allow the engine to return to the idle speed.
6. Increase the engine speed slowly noting the operation of the E.G.R. valves.
7. The E.G.R. valves should commence to open between 700 r.p.m. and 950 r.p.m.
If the valves either fail to open or open late check for the following possible causes.
a. Failed E.G.R. cut-out switch (see Section U7).
b. Failed E.G.R. cut-off solenoid (see Section U7).
c. Failed E.G.R. full throttle cut-out micro-switch (see Section U7).
d. Leak or blockage in the carburetter signal pipe to weakening device cut-off solenoid.
e. Leak or blockage in the E.G.R. valve signal pipe or hose from the E.G.R. cut-out solenoid to the E.G.R. valves.
f. Advanced ignition timing (see Section U6).
If the valves begin to open early check for the following possible cause.
a. Retarded ignition timing (see Section U6).
8. If the E.G.R. valves do not function correctly after carrying out Operations 1 to 7 inclusive, replace the offending valve(s) with new units.
9. Carry out Operations 1 to 7 inclusive.

E.G.R. feed pipe (see Fig. U5)
The E.G.R. feed pipe conveys exhaust gas that is to be recirculated from the exhaust balance pipe to the exhaust gas recirculation valves.

E.G.R. feed pipe - To remove
1. Unscrew the two 7/16 in. A/F nuts from the clamp at the upper end of the feed pipe (see Fig. U11).
2. Collect the two washers and 'split' the clamp from the spherical joint.
3. Repeat Operations 1 and 2 on the lower joint adjacent to the exhaust system balance pipe.

E.G.R. feed pipe - To fit
Fit the E.G.R. feed pipe by reversing the procedure given for removal, noting the following.
1. Ensure that the joint faces are clean and free from carbon deposits.

E.G.R. valves heatshield - To remove
1. Slacken the two forward ½ in. A/F nuts one on either side of the mounting flange.

2. Unscrew and remove the two 7/16 in. A/F setscrews retaining the heatshield to the rear of 'B' bank air horn; collect the washers.
3. Ease the assembly forward to release the heatshield slots from the retaining studs.
4. Withdraw the heatshield.

E.G.R. valves heatshield - To fit
Fit the heatshield by reversing the procedure given for removal.

Oxidation catalyst system (see Figs. U5 and U12)

A dual exhaust system is used. The catalytic converters are situated in the forward underfloor area, in place of the conventional front silencers (see Fig. U5).

Each converter contains two catalyst blocks of unequal length and has sufficient volume to perform the dual functions of converter and silencer (see Fig. U12). Two converters are fitted to each car, one for each bank of the engine cylinders.

A platinum group metal catalyst on a ceramic monolith support has been chosen for optimum conversion efficiency and rapid warm-up. Two separate blocks are used to minimise the effect of thermal shock, and these are positioned to give good gas distribution and effective utilisation of the catalyst volume.

The catalyst promotes the reaction between the residual hydrocarbons and carbon monoxide in the exhaust and the secondary air injected into the exhaust ports.

Catalytic converter protection
To protect the catalytic converters from damage due to overheating (caused by engine malfunction) a warning system is fitted to the exhaust catalytic converters and the car floor (see Fig. U44). This warning system will illuminate a red warning lamp on the facia if the temperature becomes excessive in any of the areas mentioned.
Note
If an exhaust overheat condition is signalled the speed of the vehicle must be reduced to 50 k.p.h. (30 m.p.h.) and this speed must not be exceeded until the cause of the overheat warning has been investigated and corrected by an authorised Distributor/Retailer.

Further protective measures to be observed are as follows.

Unleaded gasoline

Use unleaded gasoline only (88 RON Min.). The use of leaded gasoline will result in a substantial reduction in the performance of the catalyst. Under no circumstances add fuel system cleaning agents to either the fuel tank or carburetters for induction into the engine, as these materials may have a detrimental effect on the catalytic converter.

Fuel

Do not allow the vehicle to run out of fuel. If the vehicle does run out of fuel at a high speed, possible damage to the catalyst could result.

Engine malfunction

If the engine misfires or suffers from a lack of power which could be attributed to a malfunction of either the ignition or fuel systems, the vehicle should be driven only at low speed and the fault rectified as soon as possible. Driving at high speeds with a malfunction in either of these systems could cause overheating and consequent damage to the catalyst.

Catalytic converter - To remove
1. Remove the screws retaining the relevant section(s) of the grass-fire shields below the catalytic converter.
Note
Take care when removing the shields as the sharp edges could cause injury to the operators hands.
2. Unscrew the adapter and withdraw the catalyst overheat sensor (see Fig. U43).

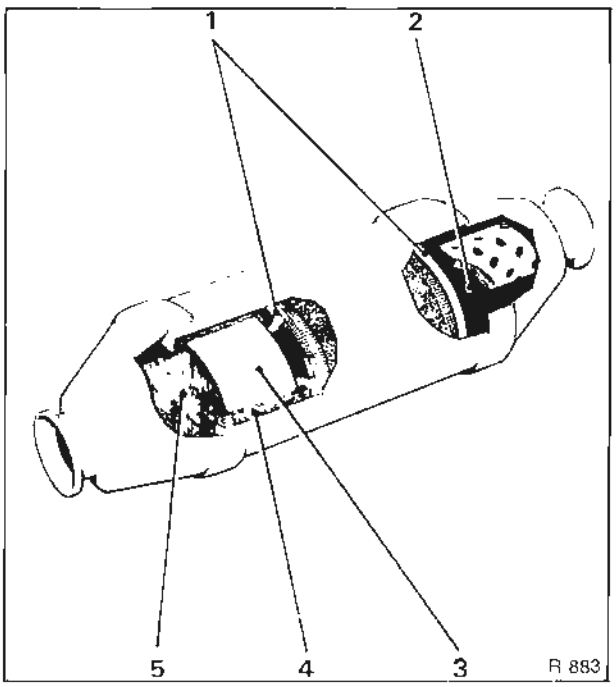

Fig. U12 Catalytic converter assembly
1 Stainless steel mesh retaining rings
2 Silencing chamber
3 Fireclay coating
4 Stainless steel mesh
5 Monolithic catalyst

Printed in England
© Rolls-Royce Motors Limited 1977
January 1977
T.S.D. 4200 (Japan)

3. Using a ⅝ in. A/F spanner, slacken the nuts on the spherical joint clamps immediately to the front and rear of the catalytic converter.
4. Support the weight of the catalytic converter and remove the nuts from the spherical joint clamps. Dismantle and remove the clamps.
5. Withdraw the catalytic converter and collect the spherical sealing rings from between the pipe connections.

Catalytic converter - To fit
Fit a catalytic converter by reversing the procedure given for removal, noting the following.
1. The seal rings and pipe flares must be thoroughly clean and free from scale and may be lightly dressed with fine emery cloth if required.
2. The clamp bolt threads should be lightly oiled to prevent binding during assembly and the spherical faces of the sealing rings and the grooves in the clamps should be smeared with a graphite lubricant, to ensure correct alignment of the pieces on assembly.
3. Fit the catalytic converter assembly complete with seal rings, then loosely fit the joint clamps.

Note
The catalytic converter assembly should be fitted with the square shaped catalyst cells (visible when looking along the short pipe into the catalytic converter essembly) towards the front of the vehicle and the perforated tube (visible when looking along the short pipe into the catalytic converter assembly) towards the rear of vehicle.

The sealing rings should be fitted between the pipe connections so that the sealing ring with the smaller diameter hole in the centre is fitted to the rear of the catalytic converter assembly.

Printed in England
© Rolls-Royce Motors Limited 1977
January 1977
T.S.D. 4200 (Japan)

Section U3

Fuel evaporation emission control system

The Fuel Evaporation Emission Control System eliminates direct venting of the fuel system, thus preventing the release of unburnt hydrocarbons into the atmosphere.

Vapour from the fuel system is collected and stored in a charcoal filled canister. The canister is purged whenever the engine is running and the stored fuel vapour is extracted from the charcoal and burnt in the engine.

The system is illustrated in Figure U13 and comprises the following main components.

Canister (see Fig. U14)
Carbon granules (charcoal)
Float chamber connection
Fuel tank connection
Polyurethane air filter
Purge line connection
Weakening device connection

Fuel tank (see Fig. U16)
Combined pressure/vacuum relief valve
Expansion tank
Fuel trap assembly

Purge line (see Fig. U13)
Air filter
Restrictor

Weakening device (see Figs. U23 and U24)
Adjustable orifice
Air filter
Anti 'run-on' solenoid
Cut-off solenoid
Cut-out switch
Float chamber drain valve
Float chamber vent valve
Fuel receiver chamber
Non-return valves
Venturi chamber

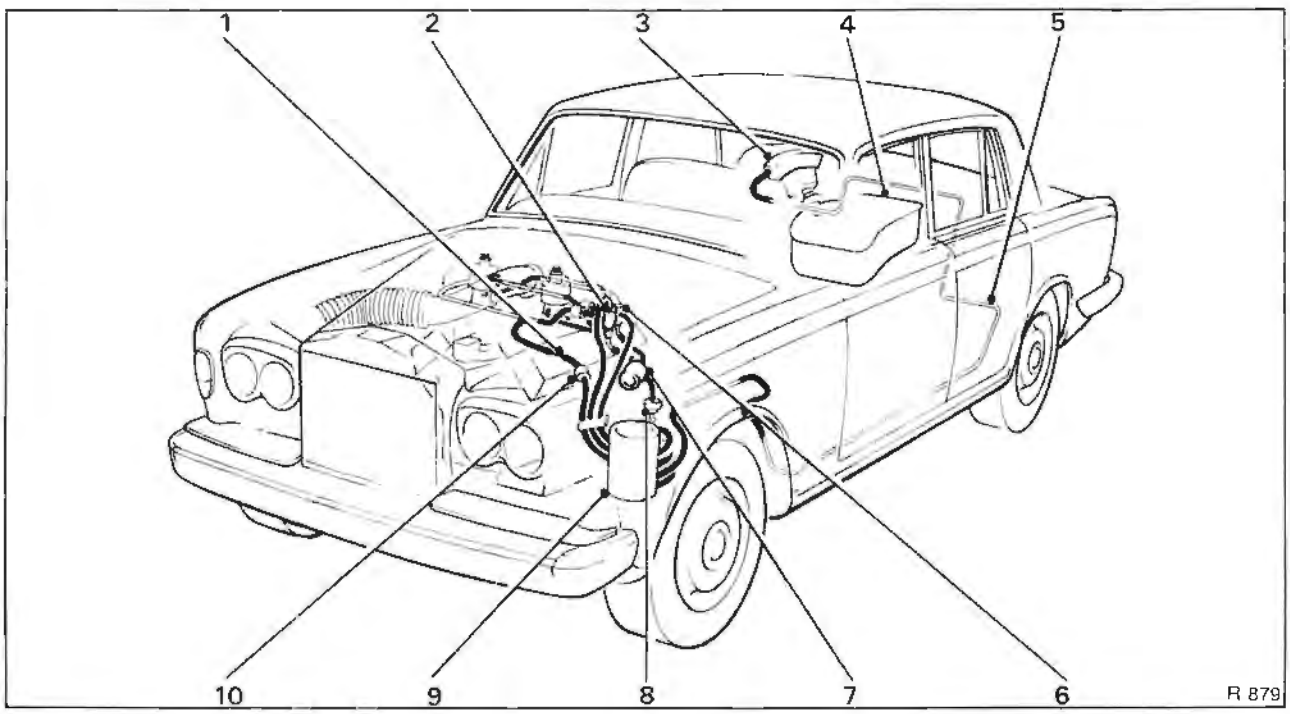

Fig. U13 Fuel evaporation emission control system

1 Purge line restrictor
2 Float chamber vent valve
3 Fuel trap assembly
4 Fuel tank
5 Fuel vapour line
6 Weakening device
7 Weakening device filter
8 Float chamber drain valve
9 Evaporation loss control canister
10 Purge line filter

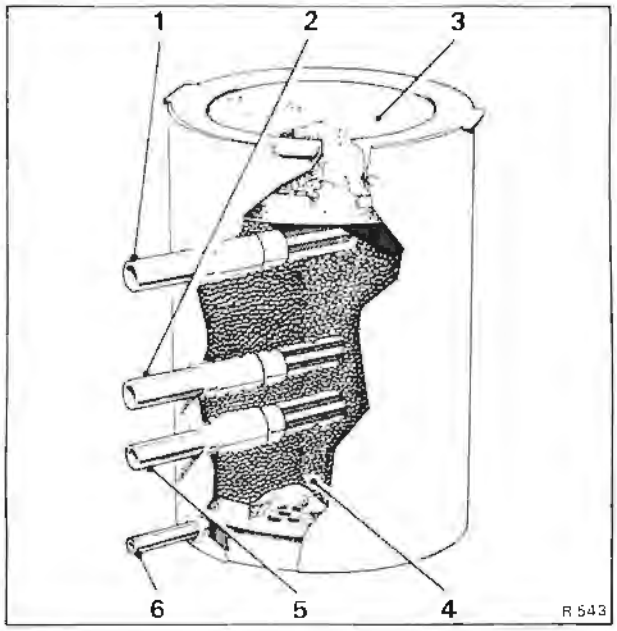

Fig. U14 Control canister
1 Weakening device connection
2 Float chamber vent connection
3 Polyurethane filter
4 Carbon
5 Fuel tank vent connection
6 Purge line connection

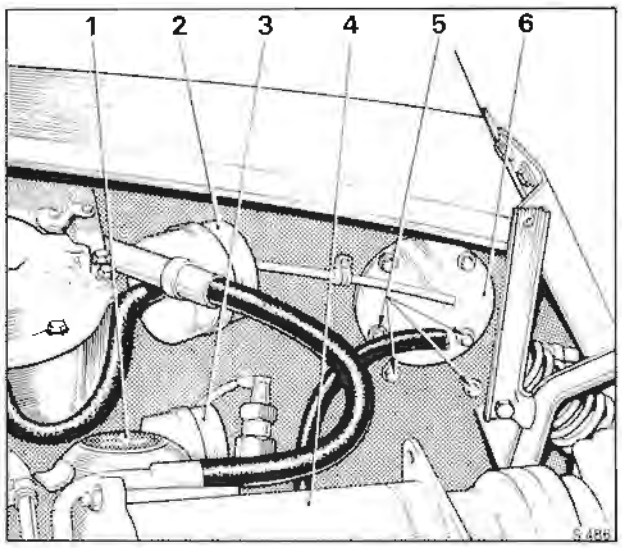

Fig. U15 Foam filter access cover, purge line filter and weakening device filter
1 Engine oil filler cap
2 Weakening device filter
3 Purge line filter
4 Refrigeration compressor
5 Canister securing setscrews
6 Foam filter access cover

For details of the servicing and maintenance requirements of the Fuel Evaporation Emission Control System, refer to the Service Schedules Manual - T.S.D. 4117.

Control canister (see Figs. U13 and U14)
The evaporation emission control canister is situated under the left-hand front wing. It is a cylindrical container filled with activated carbon granules which adsorb and retain fuel vapour. There are connections for the mixture weakening device vent, the fuel receiver vent, the fuel tank vent and the purge line. The top of the canister is open to atmosphere and contains a Polyurethane foam filter element.

When the engine is running air is drawn from the atmosphere through the foam filter element and carbon granules to the lowest connection on the canister. The air, containing fuel vapour from the carbon granules then passes into the engine via the purge line.

Control canister - To remove
1. Remove the front left-hand road wheel as described in Chapter R.

Note
Left-hand is determined when viewed from the driver's seat.

2. Remove the front section of the underwing sheet by unscrewing the small screws situated around the outer edge of the sheet. Resistance may be experienced when the sheet is being freed, as it is sealed around the edge with Bostik Sealing Compound 771.
3. The canister will be clearly visible towards the front of the vehicle.
4. Using the special pliers (RH 8090), remove the steel retaining clips from the four hose connections to the canister. Label the hoses to facilitate identification and withdraw the four hoses from the canister.
5. Raise the bonnet and from inside the engine compartment locate the canister foam filter access cover (see Fig. U15).
6. Unscrew and remove the four setscrews indicated as securing setscrews in Figure U15. Before removing the final setscrew support the control canister.
7. Withdraw the canister from beneath the wing.

Control canister - To fit
Fit the canister by reversing the procedure described for removal, noting the following points.
1. Ensure that the rubber hoses are in a good condition and new hose retaining clips are fitted.
2. Ensure that the underwing sheet is sealed with Bostik Sealing Compound 771.

Polyurethane foam filter element - To renew

It is not necessary to remove the canister from the car in order to extract the polyurethane foam filter element. A detachable cover is situated in the left-hand valance (see Fig. U15).

1. Unscrew the four screws retaining the access cover, lift off the cover and withdraw the filter element from the top of the canister.

When fitting a new element, ensure that it is correctly positioned inside the retaining rim of the canister. Fit the access cover and tighten the setscrews.

Fuel tank assembly

The fuel tank assembly comprises the fuel tank, the expansion tank and the fuel trap assembly (see Fig. U16).

The fuel tank is vented from three positions to the fuel trap assembly which is mounted above the fuel filler. One vent is from the fuel filler neck and the others are from the fuel tank.

The three vent lines join at a common junction block situated adjacent to the fuel filler neck, the main vent line then passes to the fuel trap assembly.

From the fuel trap a vent line passes under the floor of the car to the evaporation loss control canister.

The fuel trap assembly acts as a liquid separator and prevents liquid fuel from being transferred to the evaporation loss control canister under severe driving manoeuvres when the fuel tank is full or during expansion of the fuel at high ambient temperatures.

A combined relief and vacuum valve fitted into the end of the fuel trap assembly prevents an excessive pressure 'build up' in the fuel tank due to vapourisation or depression (as fuel is consumed), in the event of a blockage in the vent line to the evaporation loss control canister.

Included in the main fuel tank is a small expansion tank (see Fig. U16) of 3,125 litres (5.5 Imp. pt. – 6.7 U.S. pints) capacity. The expansion tank inhibits complete filling of the main fuel tank and provides additional fuel expansion volume to contend with extreme temperature conditions.

When the car is being filled with fuel, the main fuel tank (without an expansion tank) could normally be completely filled, leaving only the filler neck, vent connector pipes and fuel trap assembly to accommodate the expansion of the fuel. An expansion tank is therefore situated in the upper part of the main fuel tank and as the fuel level rises above the lower part of the assembly it flows inside through two small holes in the base. Two additional holes in the top of the expansion tank allow air to escape.

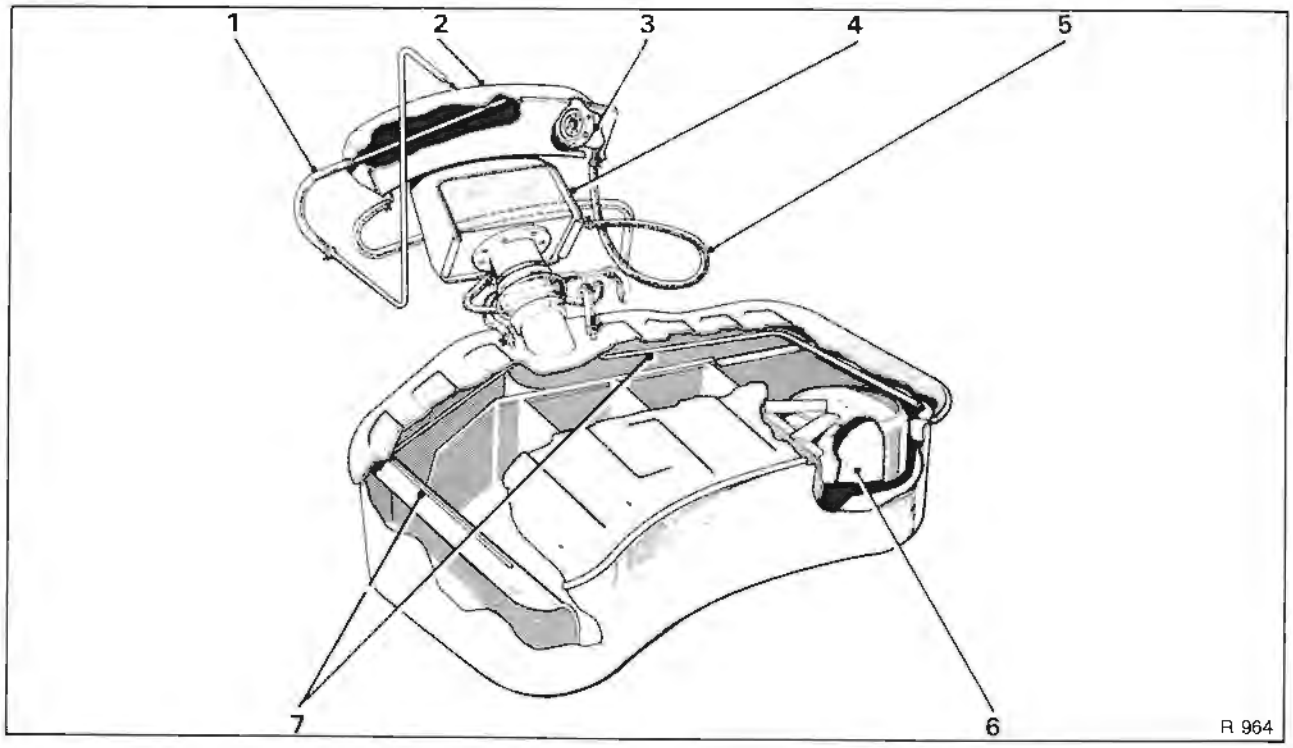

Fig. U16 Fuel tank

1 Fuel vapour line
2 Fuel trap assembly
3 Combined relief and vacuum valve
4 Fuel filler box
5 Relief valve vent
6 Expansion tank and overfill limiter
7 Vent pipes

Printed in England
© Rolls-Royce Motors Limited 1977
January 1977
T.S.D. 4200 (Japan)

Fuel tank - To remove

1. Carry out the usual workshop safety precautions.
2. Disconnect the battery.
3. Drain the fuel from the tank.
4. Remove the carpet and underlay from the luggage compartment floor to reveal the fuel tank (see Fig. U17).
5. Unscrew the four screws securing the circular metal cover over the float assembly (see Fig. U17); withdraw the cover.
6. Disconnect the three electrical leads from the float assembly (see Fig. U18); tape the loom away from the vacinity of the fuel tank.
7. Using the special pliers (RH 8090) remove the steel clip from the rubber hose situated one on either side of the fuel tank filler (see Fig. U19).

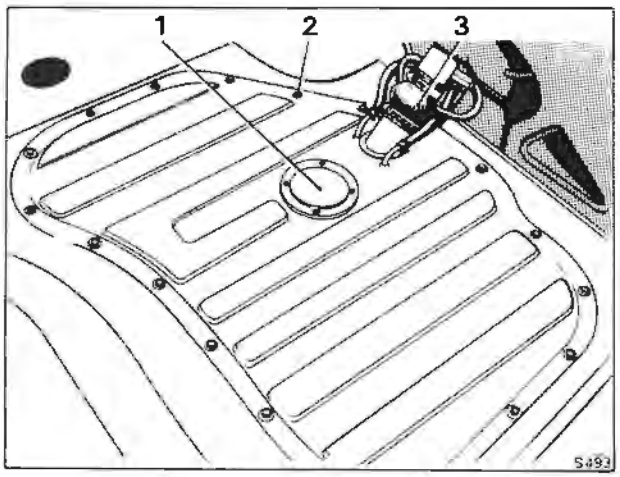

Fig. U17 Fuel tank installation

1 Float assembly cover
2 Fuel tank securing setscrews
3 Fuel filler assembly

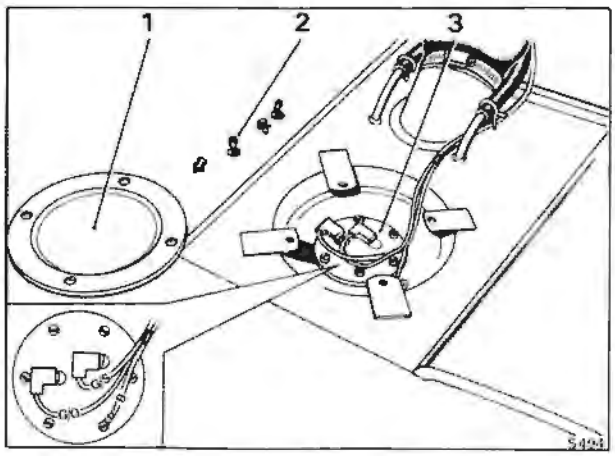

Fig. U18 Float assembly

1 Cover
2 Cover securing screws
3 Float assembly

8. Unscrew the worm drive clips securing the convoluted rubber filler hose to the filler box and tank filler connections; detach the convoluted hose from the fuel tank and blank off both open ends of the connection.
9. From under the car, unscrew the adapter securing the fuel feed pipe to the fuel tank (see Fig. U20), blank off both open ends of the connection.
10. Inside the luggage compartment, unscrew the 7/16in. A/F setscrews situated around the fuel tank.
11. Carefully 'break' the seal between the fuel tank and the luggage compartment.
12. Withdraw the fuel tank by lifting it out through the luggage compartment.

Fuel tank - To fit

Fit the fuel tank assembly by reversing the procedure given for removal, noting the following points.

1. Apply a sealant such as 'Glasticon' to the luggage compartment floor around the area of the fuel tank securing setscrew holes (this area is used for seating the lip of the fuel tank), to provide a good seal when the fuel tank assembly is installed.
2. Ensure that all rubber hoses are in a good condition.
3. Always fit new steel clips to retain the various vent hoses.
4. After fitting the fuel tank, ensure that the adapter securing the feed pipe does not leak fuel with the fuel pumps operating.

Fuel trap assembly - To remove

1. Disconnect the battery and ensure that the usual workshop safety precautions are carried out.
2. Remove the carpet and underlay in the luggage compartment.
3. Remove the tool kit.
4. Remove the fuel filler door release ring.
5. Unscrew the five 'Phillips' headed screws from the side carpet; four secure the brackets retaining the tool kit and the fifth is positioned at the front of the side carpet.
6. Release the 'Tenax' clip situated adjacent to the rear lamps access point.
7. Remove the side carpet and the carpet covering the fuel filler neck. The carpet panel covering the filler neck is retained by a setscrew at the top (accessible from within the fuel filler box) and a small screw at the rear (that screws into the luggage compartment floor).
8. Using special pliers (RH 8090) remove the steel clips from the rubber hoses. Withdraw the hoses from their respective pipes.
9. Locate the electric loom that is fitted adjacent to the fuel trap assembly (see Fig. U21). Straighten the three clips securing the loom in the vacinity of the fuel trap assembly.

Gradually ease the loom in a downwards direction until it lies as shown in Figure U21; in this position the loom will not impede the removal of the fuel trap.

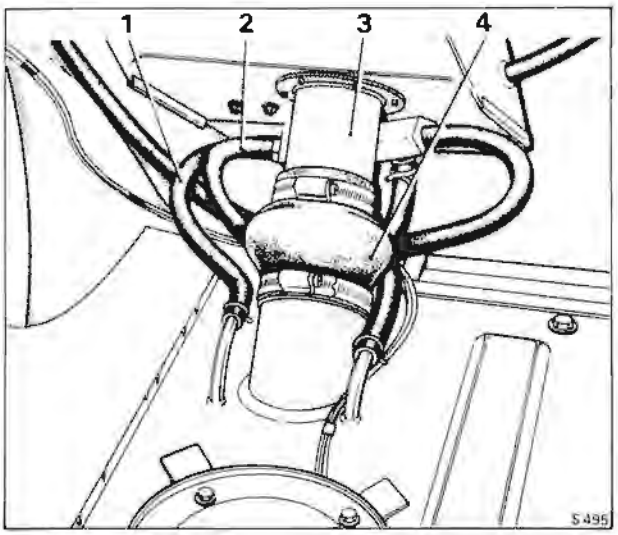

Fig. U19 Fuel filler assembly
1 Vent - Tank to junction block
2 Vent - Filler to junction block
3 Metal filler pipe
4 Convoluted filler hose

10. Unscrew and remove the three 2 B.A. setscrews securing the fuel trap assembly.
11. Slowly move the fuel trap rearward and downward until the lower end can be turned into the luggage compartment and the assembly withdrawn from the car.

Fuel trap assembly - To fit
Fit the fuel trap assembly by reversing the procedure given for its removal noting the following points.
1. Ensure that the rubber hose connections are in good condition.
2. Ensure that new steel retaining clips are used.

Fuel trap relief and vacuum valve - To remove
1. Remove the fuel trap assembly as described in Fuel trap assembly - To remove.
2. Unscrew the retaining setscrews, taking care not to lose the washers.
3. Withdraw the relief and vacuum valve.

Fuel trap relief and vacuum valve - To fit
Fit the relief and vacuum valve by reversing the procedure given for its removal noting the following points.
1. Ensure that the joint faces of the relief and vacuum valve and fuel trap assembly are clean and in good condition.
2. Fit a new gasket.

Fuel filler - To remove
1. Refer to Fuel trap assembly - To remove and carry out Operations 1 to 8 inclusive.
2. From inside the luggage compartment unscrew and remove the metal connection for the vent hose situated half-way up the metal filler pipe.
3. Unscrew the worm drive clips securing the convoluted rubber hose.
4. From inside the filler box remove the screws securing the filler assembly to the body.
5. Withdraw the metal filler assembly.

Fuel filler - To fit
Fit the fuel filler by reversing the procedure given for removal, noting the following points.
1. Fit new gaskets if necessary.

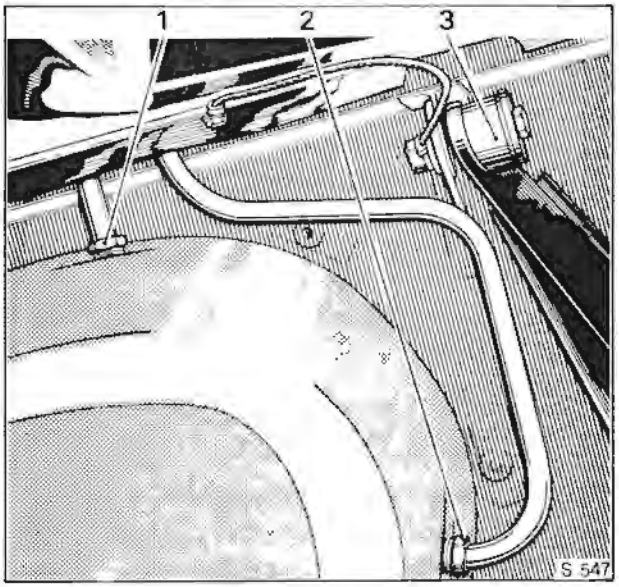

Fig. U20 Fuel pipes
1 Fuel feed pipe
2 Fuel return pipe
3 Spare wheel carrier pivot

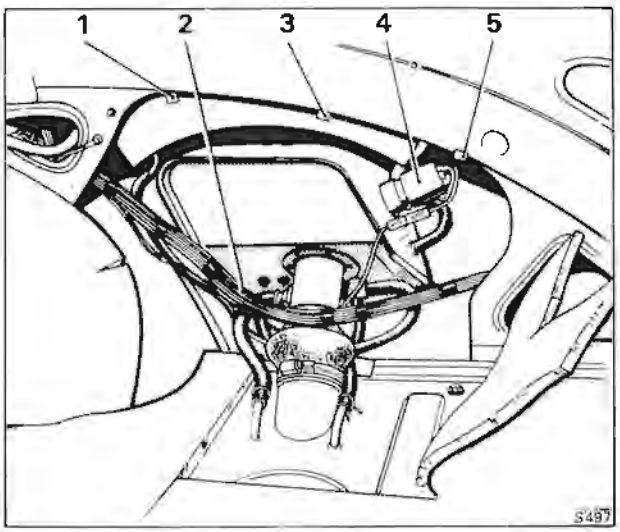

Fig. U21 Fuel trap removal/fitting
1 Loom retaining clip
2 Loom
3 Loom retaining clip
4 Fuel filler door release solenoid
5 Loom retaining clip

Printed in England
© Rolls-Royce Motors Limited 1977
January 1977
T.S.D. 4200 (Japan)

Fuel evaporation emission control system - To leak check

Whenever the various pipes, hoses and components of the fuel evaporation emission control system are disturbed, the system should be checked for air leaks upon assembly.

To test the system proceed as follows.

1. Position the vehicle on a ramp and carry out the usual safety precautions (i.e. ensure that the gear range selector lever is in 'Park' position, the parking brake firmly applied, the engine switched off, etc.,). Raise the ramp.

2. Remove the left-hand horn assembly (left-hand is decided when standing under the vehicle, looking towards the front), see Chapter M.

3. Through the resultant gap between the front wing and wing sheet, locate the emission control canister and identify the hose connection from the fuel tank (second from the bottom).

4. Using the special pliers (RH 8090), remove the steel retaining clip from the fuel tank connection hose at the control canister.

5. The fuel tank hose should be detached from the canister and connected to the test equipment (see Fig. U22).

6. Apply air pressure to the fuel tank hose via the test equipment until a reading of 38 cm. (15 in.) H_2O is attained and close the pressure supply.

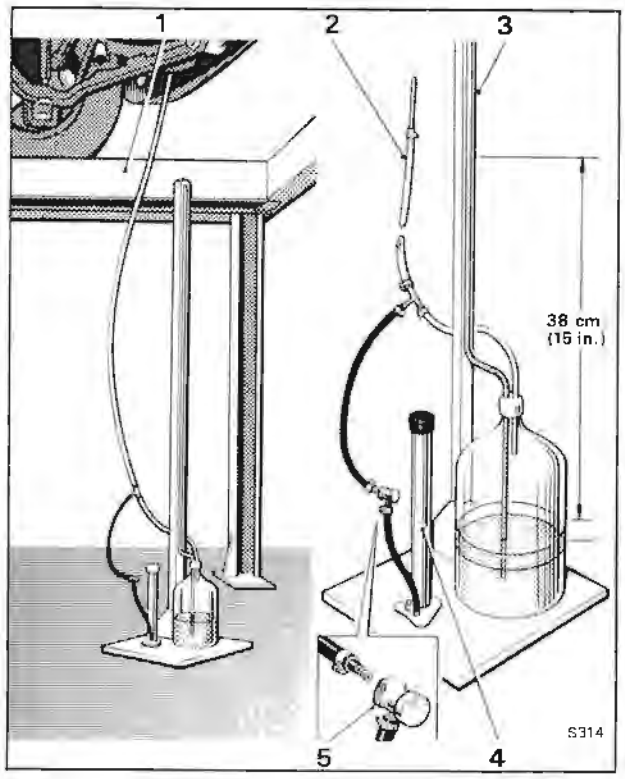

Fig. U22 Leak check test equipment

1 Ramp
2 Connection to fuel tank/canister hose
3 Test equipment
4 Pump
5 One way pressure valve

7. After 5 minutes again check the pressure reading, this should not have fallen by more than 12,7 mm. (0.5 in.).

8. If the pressure drop is more than 12,7 mm. (0.5 in.), progressively treat all joints in the system with soap solution to detect air leaks.

9. Rectify any air loaks and again leak check the system.

10. When the system is satisfactory, detach the test equipment and connect the hose to the control canister, secure with a new steel retaining clip.

11. Fit the left-hand horn assembly as described in Chapter M.

Purge line

The purge line consists of a rubber hose, passing from the lowest connection on the canister through the valance junction piece to the induction manifold connection on the opposite side of the engine (see Fig. U13). Incorporated into this hose is the purge line filter and restrictor.

When the engine is running, air drawn through the canister filter and carbon picks up the stored fuel vapours and passes them via the hoses, to the induction system at a point just below the choke housing. The restrictor in the line controls the flow rate at between 1,41 cu.m. per hr. and 1,98 cu.m. per hr. (50 cu.ft. per hr. and 70 cu.ft. per hr.) to maintain carburetter metering accuracy and the paper element line filter is fitted to prevent blockage of the restrictor.

Purge line filter

The purge line filter is situated on the left-hand valance just forward of the front road spring pot (see Fig. U15). The air filter assembly is a sealed unit and no attempt should be made to clean the element.

At the mileage intervals specified in the Service Schedules the purge line filter should be removed and a new assembly fitted as follows.

Purge line filter - To remove

1. Using the special pliers (RH 8090) remove the two steel retaining clips situated one on either side of the filter assembly.

2. Detach the inlet and outlet hoses.

3. Slacken the small setscrew that secures the clamp bracket around the filter assembly.

4. Swivel the clamp bracket to enable the filter assembly to be withdrawn.

Purge line filter - To fit

Fit the purge line filter by reversing the procedure given for removal, noting the following points.

1. Ensure that the filter assembly is fitted the correct way around, the word 'IN' moulded into the end of the casing should be towards the front of the vehicle.

2. Ensure that the rubber hoses are in a good condition and that new hose retaining clips are used.

Purge line restrictor
The purge line restrictor is situated in the purge line between the air filter and the induction manifold connection (see Fig. U13). The function of the restrictor is to maintain the air flow through the purge line within predetermined limits.

Purge line restrictor - To remove
1. Hold the restrictor firmly and slide the rubber hosing from both ends.

Purge line restrictor - To fit
Fit the restrictor by reversing the procedure given for removal, noting the following point.
1. Ensure that the purge line restrictor is fitted into the line correctly. This can be determined by comparing the diameters of the restrictor ends with those of the rubber hoses.

Purge flow rate - To check
1. Disconnect the hose from the engine side of the purge line filter and insert a flowmeter assembly (RH 8725) into the line between the filter and the restrictor. The flowmeter is a rotameter type capable of measuring between 1,4 cu.m/hr. and 2,0 cu.m/hr. (50 cu.ft/hr. and 70 cu.ft/hr.). The pressure drop across the meter must not exceed 5,08 cm.Hg. (2.0 in.Hg.).
2. Start and run the engine at 650 r.p.m.; the reading on the flowmeter should be between 1,41 cu.m/hr. and 1,99 cu.m/hr. (50 cu.ft/hr. and 70 cu.ft/hr.).
3. If the flow is less than the minimum figure quoted in Operation 2, stop the engine and substitute the purge line restrictor with a straight piece of metal pipe having an internal diameter larger than 4,76 mm. (0.187 in.).
4. Start and run the engine at 650 r.p.m.; the reading on the flowmeter should be in excess of 1,99 cu.m/hr. (70 cu.ft/hr.).
5a. If the flowmeter reading is above 1,99 cu.m/hr. (70 cu.ft/hr.) fit a new purge line restrictor and repeat Operation 2.
b. If the flowmeter reading is below 1,99 cu.m/hr. (70 cu.ft/hr.) the cause could be as follows.
(i) An air leak in any of the vacuum hoses that connect to the induction manifold connection (vacuum manifold).
(ii) A blockage in the vacuum manifold or any of the connecting hoses.

Any leaks or blockages should be rectified; the restrictor should be fitted and Operation 2 repeated. If the flow rate is still incorrect fit a new restrictor and again, repeat Operation 2.
6. Remove the test equipment and connect the hose to the purge line filter.

Weakening device
The mixture weakening device (see Fig. U23) is fitted adjacent to 'B' bank carburetter and incorporates a fuel receiver.

For any given position of the fuel metering needle, the rate of the discharge from the carburetters is governed by the difference in air pressure existing over the fuel in the float chamber and that over the jet.

The weakening device is designed to reduce the air pressure (create a depression) in the float chamber at part throttle, thereby reducing the rate of discharge from the jet.

The weakening device housing contains two chambers, (see Fig. U24), the venturi chamber, and the fuel receiver chamber, the two being interconnected by a passage and an adjustable venturi.

The venturi chamber is connected to a small drilling on the edge of the butterfly plates of both carburetters via the weakening device solenoid valve, with the throttle slightly open the drillings are subjected to manifold depression thus creating a depression in the venturi chamber which draws air from the weakening device air filter. This depression is also apparent in the fuel receiver chamber and subsequently in the carburetter float chambers.

The value of the depression is set by the position of the weakening device adjusting screw.

To obtain adequate float chamber venting to cope with hot soak conditions there is an additional vent from the fuel receiver. This incorporates a low pressure non-return valve to maintain float chamber depression under normal running conditions. In addition to this valve, a one-way valve is fitted into the venturi chamber to prevent any evaporating fuel being discharged to atmosphere.

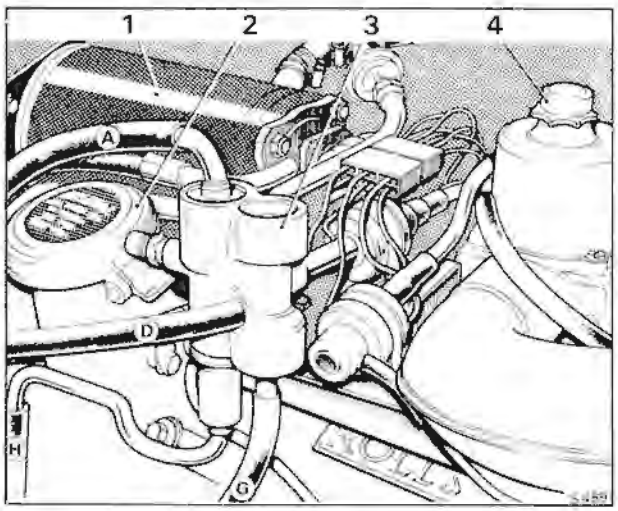

Fig. U23 Position of mixture weakening device
1 Refrigeration compressor
2 Engine oil filler
3 Mixture weakening device
4 'B' bank carburetter

Printed in England
© Rolls-Royce Motors Limited 1977
January 1977
T.S.D. 4200 (Japan)

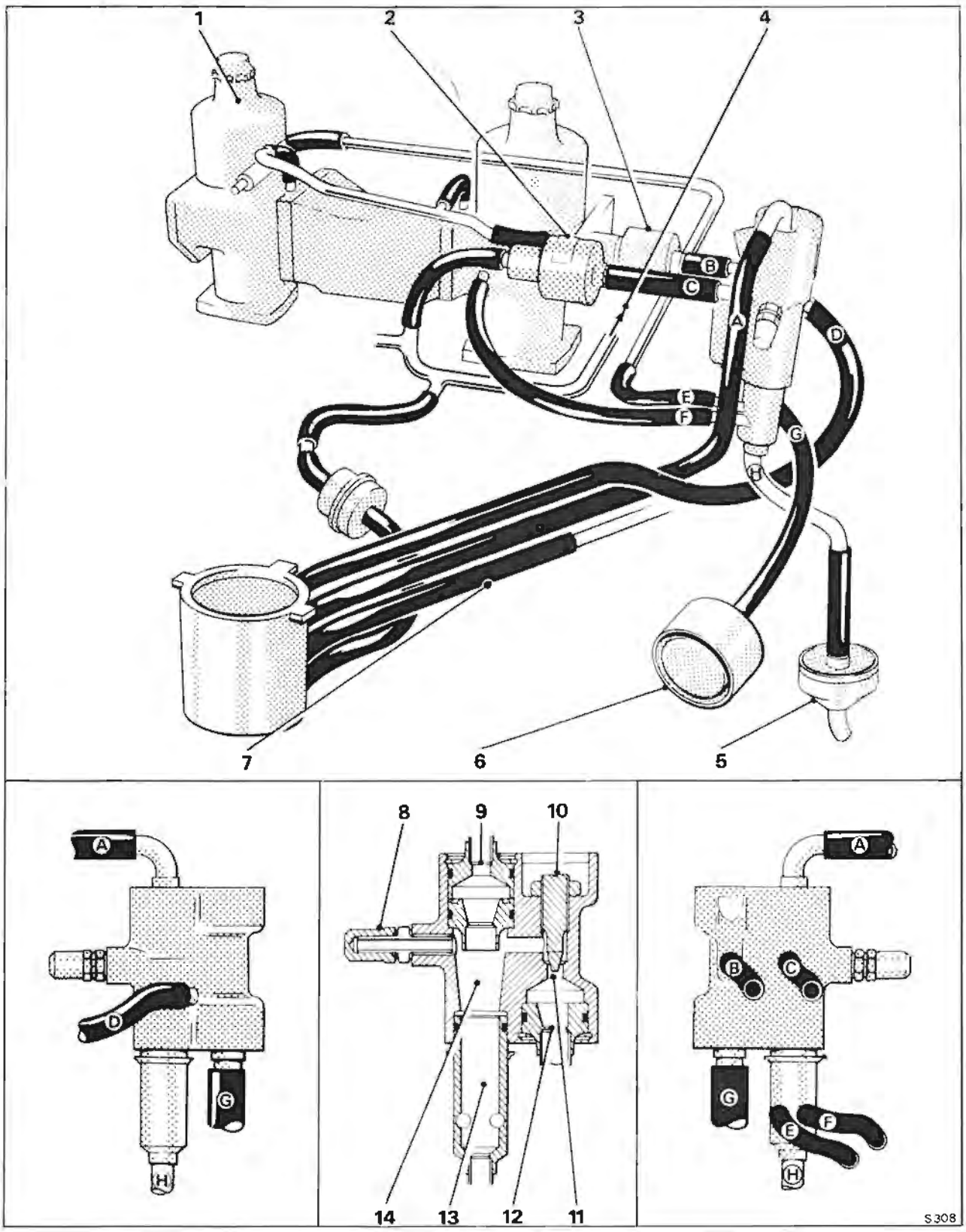

Fig. U24 Mixture weakening device

1	'A' bank carburetter	5	Float chamber drain valve	10	Adjusting screw
2	Anti 'run-on' solenoid	6	Weakening system air filter	11	Venturi chamber
3	Weakening device cut-off solenoid	7	Vent from fuel tank	12	Air intake valve
4	Induction manifold connection	8	Weakening device signal cap	13	Fuel receiver
		9	Float chamber vent valve	14	Fuel receiver chamber

A float chamber drain, also incorporating a low pressure non-return valve is mounted at the front of the engine adjacent to the oil filter, this valve is connected to the fuel receiver. Should flooding occur the head of fuel in the receiver is sufficient to open the drain valve thus preventing engine stalling if the float chamber needle valves stick.

Weakening device - To remove
1. Label all hoses connected to the weakening device assembly, this will facilitate assembly.
2. Disconnect all hoses to the weakening device.
3. Unscrew and remove the two small setscrews that retain the weakening device to the solenoid platform; the two screws are situated just below the pipe/hose connections for the anti 'run-on' solenoid and weakening device cut-off solenoid.
4. Withdraw the weakening device.

Weakening device - To fit
Fit the weakening device by reversing the procedure given for removal, noting the following point.
1. Ensure that all hoses connecting to the assembly are in a good condition and that all connections are 'air tight'.

Weakening device - To dismantle (see Fig. U24)
1. Remove the weakening device from the vehicle.
2. Remove the small screw that secures the fuel receiver assembly into the base of the weakening device, withdraw the assembly.
3. Unscrew the weakening device signal cap, collect the cap fibre washer. Unscrew the signal line adapter from the casting and withdraw the aluminium washer from the adapter.
4. Remove the circlip from the top of the fuel receiver chamber, withdraw the float chamber vent pipe (slight resistance may be felt due to the rubber sealing ring). With a soft drift (e.g. wooden pencil), push the float chamber vent valve out of the weakening device assembly (the drift is required because the rubber sealing ring fitted around the vent valve will cause a small resistance).
5. Remove the circlip from the base of the venturi chamber, withdraw the **air intake pipe** containing a one-way valve (slight resistance may be felt due to the rubber sealing ring).
6. Remove the **anti-tamper cover** from the top of the venturi chamber, unscrew the lock-nut and using a screwdriver unscrew the **adjusting screw.**

Weakening device - To assemble
To assemble the weakening device, reverse the procedure given for removal, noting the following.
1. Ensure that all components are clean before assembly.
2. Ensure that the rubber sealing rings are in a good condition and lightly smeared with the minimum amount of grease. Ensure that no grease is applied to the valves otherwise a malfunction may occur due to the grease making the valves stick.
3. After assembly, the operator should check that he can blow but not suck on the metal pipes, one on top of the fuel receiver chamber and the other at the bottom of the venturi chamber.

Weakening device signal strength - To check
The **float chamber depression** should be checked as follows.
1. Start and run the engine until normal setting conditions are attained (i.e. engine cooling system thermostat opened, air conditioning unit switched off and the automatic choke is off).
2. Stop the engine.
3. Connect an electric impulse tachometer to the engine in accordance with the manufacturer's instructions.
4. Disconnect the E.G.R. cut-off solenoid to carburetter signal pipe hose at the solenoid and blank off the hose.
5. Unscrew and remove the weakening device signal cap and connect a 0 to 15,5 cm. (0 to 6 in.) water manometer to the weakening device adapter.
6. Start and run the engine at 2 000 r.p.m. in 'Park' until a steady manometer reading is obtained, this should be 5,08 cm. (2.0 in.) of water depression.

A low or zero reading may be caused by
a. A blockage in the weakening device venturi to the weakening device cut-off solenoid.
b. A blockage or restriction in the signal pipe(s).
c. An air leak in the hoses or pipes from the float chambers to the emission control canister.
d. Faulty float chamber vent valve or drain valve.
e. Low engine temperature below 14°C. (57°F.) a faulty weakening device solenoid or weakening device switch.

A high reading may be caused by
a. An obstruction in the weakening device bleed orifice (weakening device signal strength adjusting screw).
b. Obstructed weakening device air filter or evaporation loss control canister.
c. Incorrect connection or blockage in the weakening device to either the valance connection or the evaporation loss control canister.
d. Weakening device air intake valve sticking closed.
e. Obstructed weakening device air filter hose.
f. Incorrect operation of anti 'run-on' solenoid.
7. If the float chamber depression is still incorrect after checking through the possible causes in Operation 6, set the weakening device signal strength (float chamber depression) by unlocking and turning the adjusting screw (see Fig. U24) until the correct manometer reading is obtained. Turning the adjusting screw clockwise increases the depression.
8. Remove the blank from the E.G.R. cut-off solenoid to signal pipe hose and connect the hose to the solenoid.

Printed in England
© Rolls-Royce Motors Limited 1977
January 1977
T.S.D. 4200 (Japan)

9. Raise the engine speed slowly noting both the manometer and tachometer readings. The maximum steady manometer reading should be obtained between 1 200 r.p.m. and 1 500 r.p.m.
10. Allow the engine speed to return to the idle setting (650 r.p.m.) and check the float chamber depression reading on the manometer.
If the float chamber depression at idle speed is above 10.16 mm. H_2O (0.4 in. H_2O) check the ignition timing at idle as this condition may result in unsatisfactory driveability.
11. Fit the tamperproof cover into the top of the venturi chamber.

Weakening device air filter - To remove
The air filter container is mounted on the left-hand valance just forward of the road spring pot (see Fig. U15).

This is a sealed unit and no attempt should be made to clean the element.
1. To remove the air filter assembly, detach the hose and unscrew the worm drive clip situated around the assembly.
2. Withdraw the assembly.

Weakening device air filter - To fit
Fit the air filter container by reversing the procedure given for removal.

Section U4

Crankcase emission control system

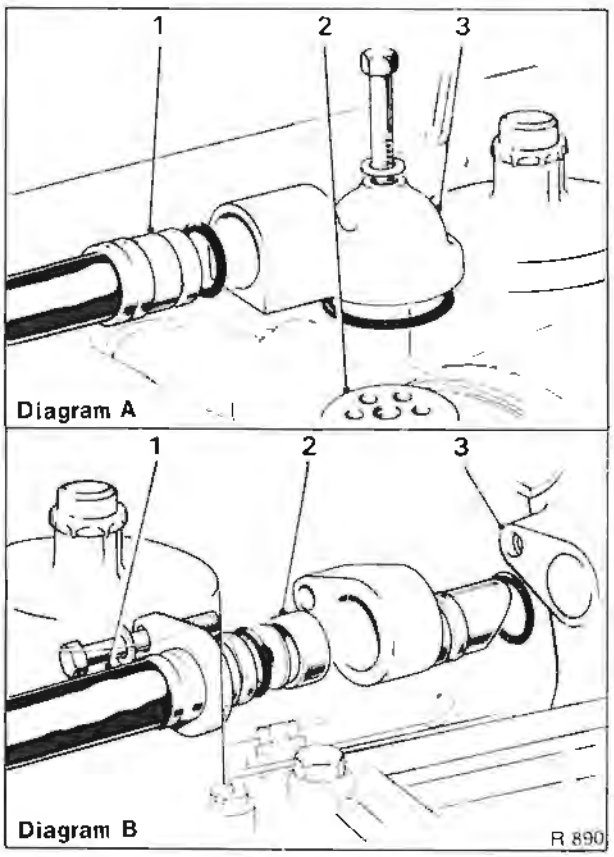

Fig. U25 Crankcase breather pipe connections

Diagram A		Diagram B	
1	Breather tube	1	Breather tube
2	Choke housing	2	Flame trap
3	Breather connection	3	Oil filler housing

Crankcase emissions are controlled by a recirculatory closed breather system.

An insulated draught tube connects the crankcase via the oil filler which is fitted with a sealed cap, to the choke housing upstream of both the choke butterfly and the carburetters. A flame trap capsule containing three wire mesh discs is fitted in a housing at the crankcase end of the draught tube. Engine emission (blow-by) is drawn into the induction system via the draught tube, due to the depression in the choke housing.

1. The flame trap fitted to the breather pipe should be cleaned in the following manner, at the specified mileage.
2. Unscrew the setscrew securing the breather pipe connection to the oil filler pedestal; withdraw the connection from the pedestal (slight resistance may be felt due to the rubber 'O' ring connections).
3. Withdraw the connection from the pipe flange and collect the restrictor.
4. Wash the flame trap assembly in clean petrol, then dry with a high pressure air line. The flame trap assembly consists of 3 gauzes crimped together as shown in Figure U25.
5. To clean the adapter fitted to the choke housing, remove the single setscrew from the breather pipe end connection and detach the pipe.
6. Clean the adapter fitted to the choke housing and ensure that the holes in the adapter are clear.
7. Assembly of the flame trap and breather pipe is in the reverse order, ensuring that the 'O' rings are in good condition.

Printed in England

© Rolls-Royce Motors Limited 1977

January 1977

T.S.D. 4200 (Japan)

Printed in England
© Rolls-Royce Motors Limited 1977

Section U5

Carburetters and Automatic choke system

The Carburetter and Automatic Choke System can be seen illustrated in Figure U26 and comprises the following main components.

Automatic choke
'Fast-idle'
Stove pipe
(For the remainder of the Automatic Choke System refer to Chapter K).

Carburetters (see Fig. U28)
Bi-metal jet lever
Carburetter fuel filter
Carburetter idle airflow balance
Float
Float chamber
Float needle
Jet assembly
Jet needle
Overrun valve
Piston
Piston damper
Piston damper retainer (Piston ball race clip)
Suction chamber
Tamperproof caps
Throttle disc
Throttle linkage
Viscosity compensator

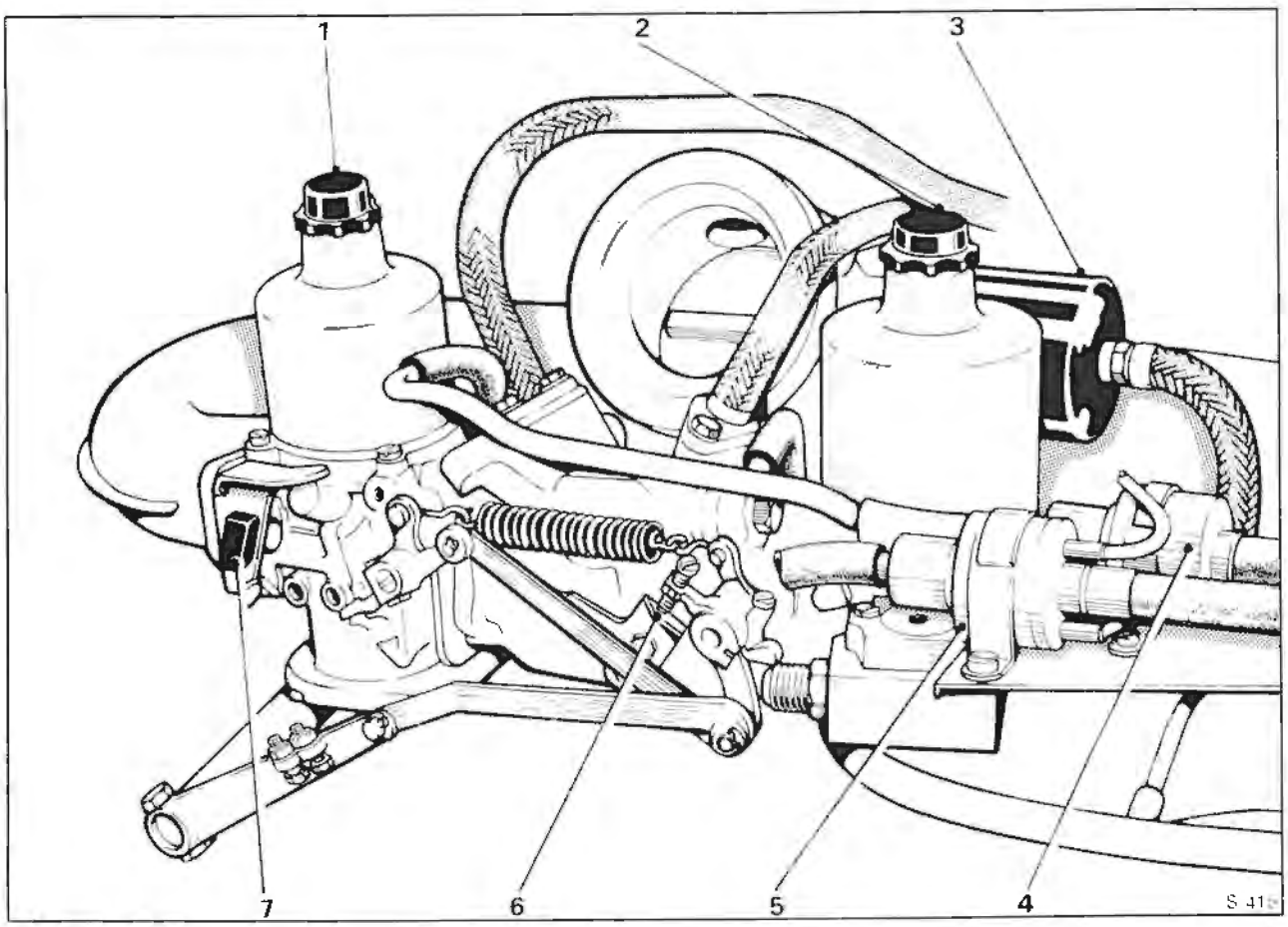

Fig. U26 Carburetters and linkage

1 'A' bank carburetter
2 'B' bank carburetter
3 Choke bi-metal housing
4 Weakening system cut-off solenoid
5 Anti 'run-on' solenoid
6 Idle speed adjusting screw
7 E.G.R. full throttle cut-out micro-switch

January 1977
T.S.D. 4200
(Japan)

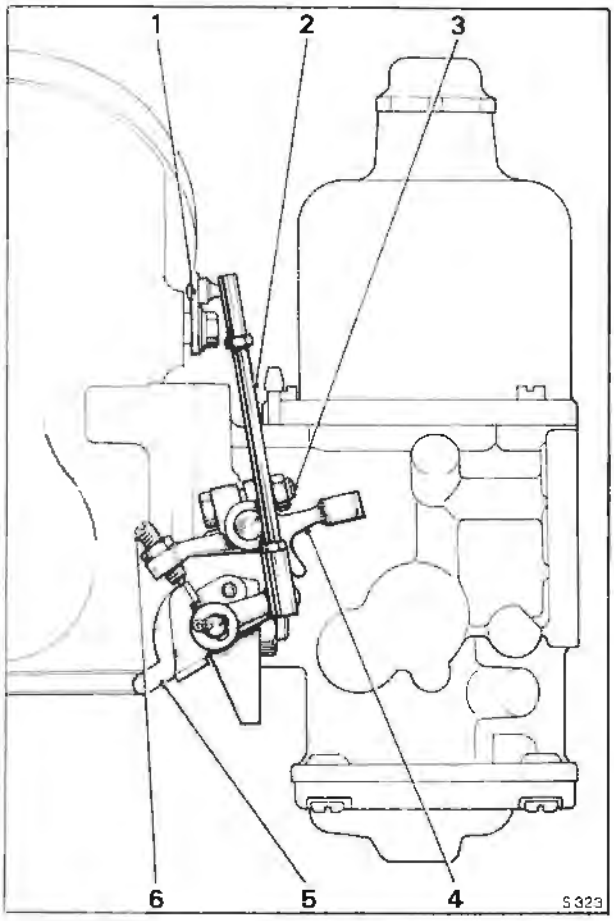

Fig. U27 Fast-idle mechanism
1 Control rod lever
2 Butterfly rod
3 Lever clamp bolt
4 'Fast-idle' lever
5 Cam
6 Adjusting screw

Temperature controlled air intake

Air cleaner/silencer
Air blend valve
Cold air intake
Hot air scoop
Manifold vacuum hose
Resonator
Temperature sensor

Weakening device

(Refer to Section U3).

Automatic choke

All details for the Automatic Choke System are given in Chapter K, except for the checking and setting procedures of the following.

'Fast-idle' - To set

1. Ensure that the usual safety precautions are carried out (i.e. parking brake firmly applied, gear range selector lever in 'Park' etc.) and connect an impulse tachometer in accordance with the manufacturer's instructions.
2. Disconnect the signal hose to the E.G.R. cut-off solenoid (not the hose from the solenoid to the E.G.R. valve), at the solenoid and blank the hose.
3. Remove the pressure tapping cap from the weakening device (see Fig. U24).
4. Open the throttles and close the choke butterfly against the bi-metal tension using control rod lever (item 1 - Fig. U27) until the adjusting screw (item 6 - Fig. U27) is resting on the tip of the fast-idle cam. At this point an extra load will be felt due to the action of the extended fast-idle plunger ceasing.
5. Start the engine, if the speed is outside a range of 850 r.p.m. to 900 r.p.m. stop the engine, open the throttles to gain access to the adjusting screw and turn the screw approximately ⅛ turn for each 20 r.p.m. required. Tighten the lock-nut.
6. Start the engine and again check the fast-idle speed.
7. When the engine speed has been adjusted to within the prescribed limits open the throttles to release the fast-idle mechanism.
8. Stop the engine, disconnect the tachometer, remove the blank from the E.G.R. signal hose to the cut-off solenoid and fit the hose to the solenoid. Fit the pressure tapping cap to the weakening device.

Choke stove pipe - To flow check

1. Ensure that the usual safety precautions are carried out (i.e. parking brake firmly applied, gear range selector lever in 'Park' etc.) and connect an impulse tachometer in accordance with the manufacturer's instructions.
2. Start and run the engine until normal operating temperature is attained. Stop the engine.
3. Disconnect the stove pipe union at the intake elbow (see Fig. U42) and connect a flowmeter to the pipe via a connector (RH 8945). The flowmeter must be a rotameter type capable of measuring 2,9 cu.m/hr. (100 cu.ft/hr.).
4. Start and run the engine at idle speed (650 r.p.m.); observe the flowmeter, a correct reading is between 1,41 cu.m/hr. and 1,55 cu.m/hr. (50 cu.ft/hr. and 55 cu.ft/hr.)
5. If the flow is less than 1,41 cu.m/hr. (50 cu.ft/hr.) check the choke stove pipe unions for leaks.
6. If the flow is in excess of 1,55 cu.m/hr. (55 cu.ft/hr.), fit a new restrictor in the choke bi-metal housing (see Chapter K).

Carburetters

Two S.U. HIF7 (Horizontal Integral Float Chamber) carburetters with 4,76 cm. (1.875 in.) choke bores (see Fig. U28) are fitted to the engine on a central 'tee' piece which is mounted over an eight branch induction manifold.

This type of carburetter automatically adjusts both its choke and jet area to meet the demand of the engine which is dependent on engine speed and

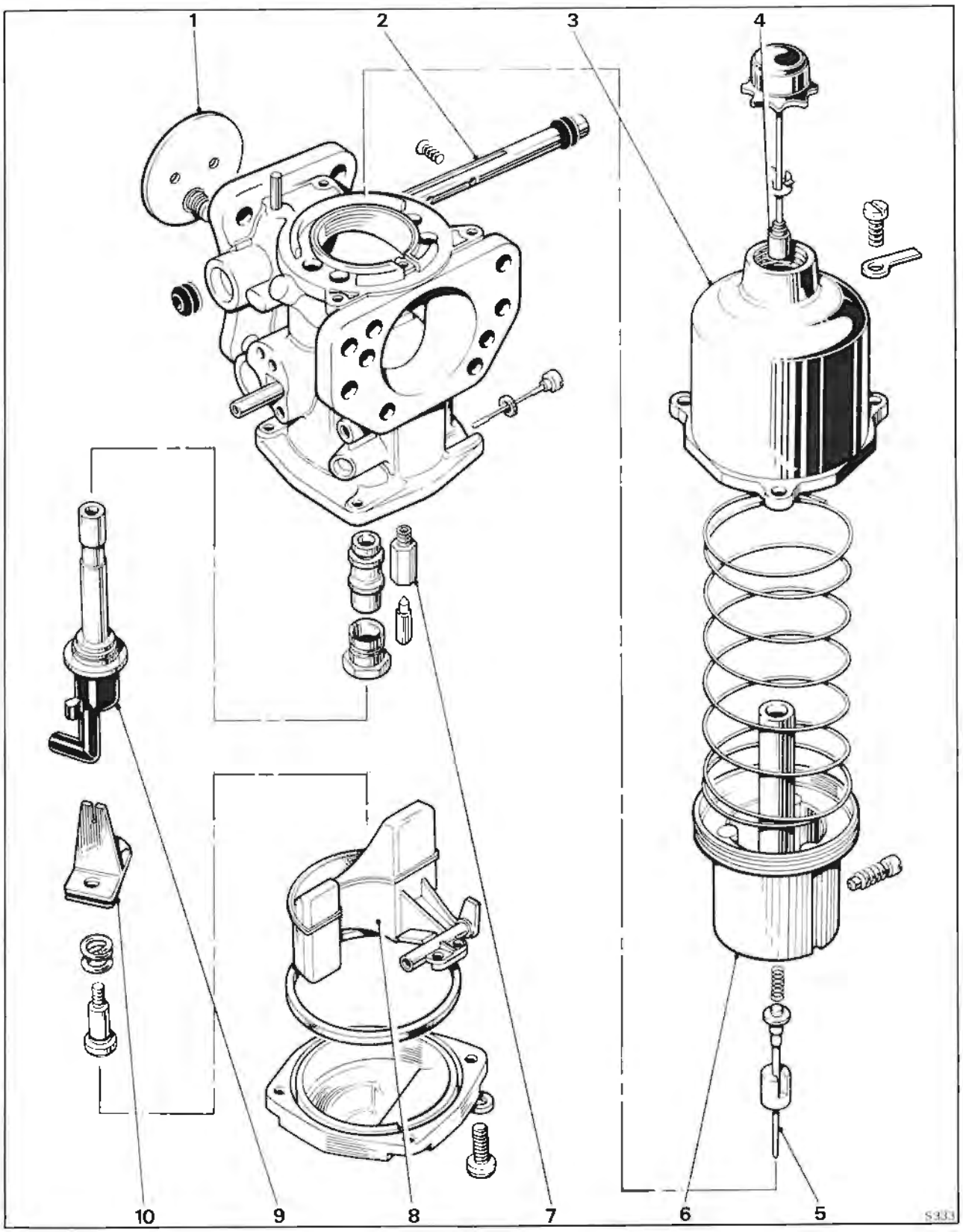

Fig. U28 SU HIF7 carburetter

1 Throttle disc with overrun valve
2 Throttle spindle
3 Suction chamber
4 Piston damper
5 Jet needle
6 Piston
7 Float needle valve assembly
8 Float
9 Jet assembly
10 Bi-metal jet lever

Printed in England
© Rolls-Royce Motors Limited 1977
January 1977
T.S.D. 4200
Japan)

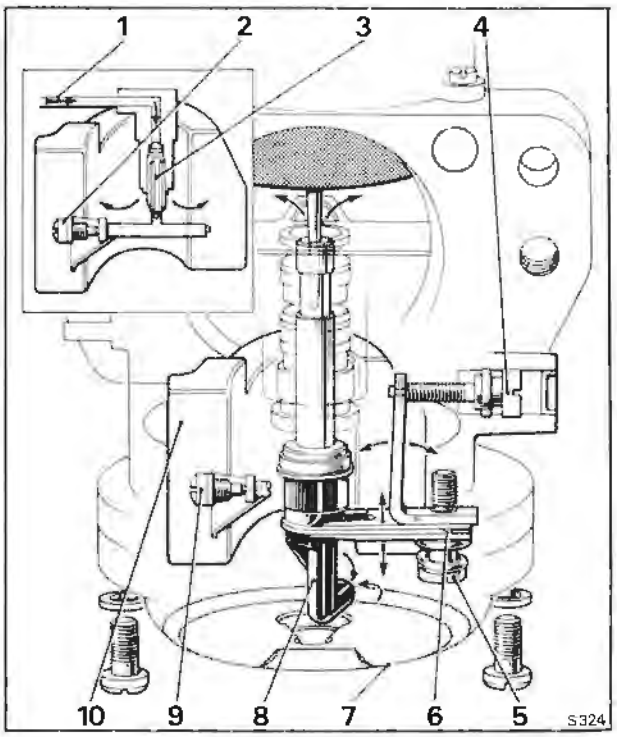

Fig. U29 Float chamber layout

1 Fuel inlet
2 Float fulcrum screw
3 Needle valve
4 Jet adjusting screw
5 Bi-metal pivot screw
6 Bi-metal assembly
7 Bottom cover-plate
8 Jet head
9 Float fulcrum screw
10 Concentric float

loading. As air is drawn through the carburetter, the piston acting as an obstruction will cause a depression to be formed in the area between the throttle and the piston. This depression is communicated by means of transfer holes in the base of the piston to the area above the piston, causing an upward force to be imposed on the piston. The piston will rise in response to this force relieving the depression in the area between the piston and the throttle as it does so until a point is reached where the force acting on the piston is balanced by the weight of the piston and the load exerted by the piston spring.

A spring-loaded jet needle is fitted to the carburetters, which is biased downstream and operates in a 2,54 mm. (0.10 in.) diameter main jet; this jet does not require centralising.

Float chamber (see Fig. U29)

The float chamber is incorporated in the main body casting; access to the chamber is obtained by removing the bottom cover-plate (item 7). The moulded float (item 10) is shaped so that it surrounds the jet tube and is pivoted along a line parallel to the inlet flange. The float is retained by a spindle (items 2 and 9) which screws into the body casting.

Entry of the fuel into the float chamber is via a brass tube (item 1) in the side of the carburetter body to a needle valve assembly (item 3).

The jet is pressed into the top of an aluminium tube which is in turn pressed into a plastic moulding (item 8). This hollow moulding known as the jet head is open at its lower end allowing fuel to enter the jet tube.

Mixture adjustment (see Fig. U29)

The jet tube of the HIF type carburetter is moved in the vertical plane to provide mixture adjustment.

The jet adjustment assembly is comprised of a right-angled adjusting lever of unequal length arms riveted to a bi-metal blade (item 6).

The blade is cut out to accept the jet head (item 8) and the shape of the jet head is formed so that any movement of the bi-metal blade is transmitted to the jet head, moving it in the vertical plane.

The right-angled adjusting lever and bi-metal blade (item 6) are attached to the body casting by a spring-loaded retaining screw (item 5) positioned in the short arm of the lever. This attachment allows the adjusting lever to be pivoted at the outer edge of its short arm and is loaded by the spring towards the jet adjusting screw (item 4).

The jet adjusting screw is located at the outer end of the long arm of the adjusting lever; screwing the adjusting screw inward will lower the jet, enriching the mixture and unscrewing the adjusting screw will allow the spring to return the lever together with the jet, weakening the mixture.

After the mixture has been set the jet adjustment can be sealed by fitting a plug into the jet adjusting screw recess of the carburetter body.

HIF7 carburetters are set and balanced by accurate flow measuring techniques during manufacture and therefore, adjustment of the mixture screws should not be necessary.

Fuel temperature compensation (Viscosity compensator) (see Fig. U29)

This device alters the jet position in relation to the metering needle to compensate for changes in fuel viscosity which take place with changes in fuel temperature.

When the fuel temperature rises, the viscosity is lowered, and in an uncompensated assembly this would allow more fuel to flow for a given jet/needle relationship.

In the HIF jet assembly the jet head is attached to a bi-metal blade (item 6). This bi-metal is immersed in the fuel in the float chamber and will move in the vertical plane in response to changes in fuel temperature. The jet will be raised to a weaker position on the jet needle when the fuel

temperature rises and will be lowered to a richer position when the temperature falls.

From this it will be seen that once the jet position has been selected by adjusting the mixture screw, alterations of fuel temperature will bring about slight alterations in jet position to compensate for the change in fuel viscosity.

The effect of this device is that drivability is improved over wide ranges of temperature, and that exhaust emissions can be kept within closer limits during cold starting and the warm-up period. Temperature compensation also allows carburetters to have the mixture setting pre-set and sealed before the car is delivered.

Overrun valves (see Fig. U30)

During overrun (i.e. when decelerating with the throttles closed), insufficient mixture is supplied to the engine to maintain satisfactory combustion. The overrun valves alleviate this condition by allowing some mixture to pass through the throttle plates (butterflies) at high inlet manifold depressions.

An overrun valve is fitted into the throttle plate of each carburetter.

An overrun valve consists of a small disc retained in each throttle plate by a spring loaded plunger. Under normal conditions the disc is seated against the throttle plate. When the throttle is suddenly closed, the increased inlet manifold depression lifts the disc from its seating and allows a metered quantity of air/fuel mixture to pass through the throttle plate.

The action of the overrun valves maintains satisfactory combustion on overrun, thus reducing hydrocarbon emissions and controlling catalyst temperatures.

After the sudden closure of the throttles and as soon as the manifold depression falls, the overrun valve disc returns to its seat on the throttle plate.

Spring-loaded jet needle (see Fig. U31)

The jet needle fitted to each carburetter is biased towards a predetermined position in the jet orifice by means of a spring-loaded fixing.

The shoulder of the needle abuts a protrusion formed on the needle guide. Under the pressure of a spring the needle is held permanently in one position relative to the air flow. As the needle is retained in a predetermined position no jet centring is required and a non-centreable jet bearing is fitted. To ensure correct fitting the needle guide carries an etched alignment mark which should be positioned mid-way between the two cut outs in the piston.

Carburetter fuel filter

A filter element is fitted into the fuel filter housing attached to the side of each carburetter. At the intervals specified in the Service Schedules these two filter elements should be discarded and new ones fitted as described in Chapter K.

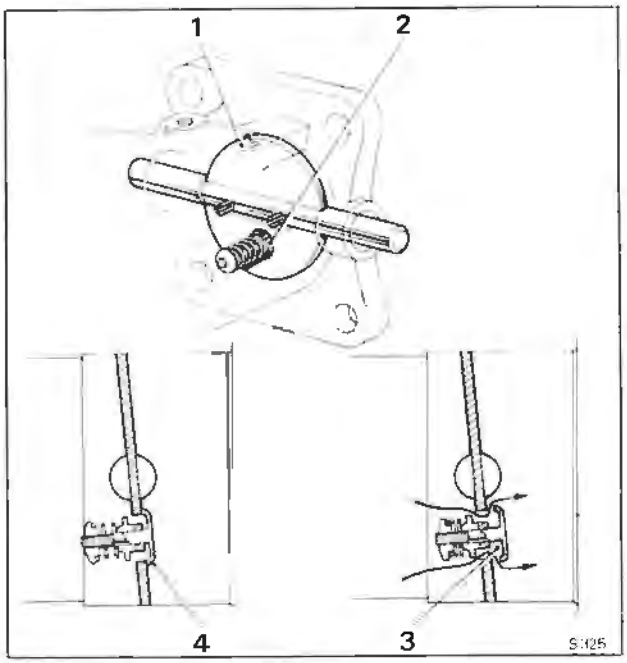

Fig. U30 Overrun valve

1 Throttle butterfly disc
2 Overrun valve
3 Overrun valve open
4 Overrun valve closed

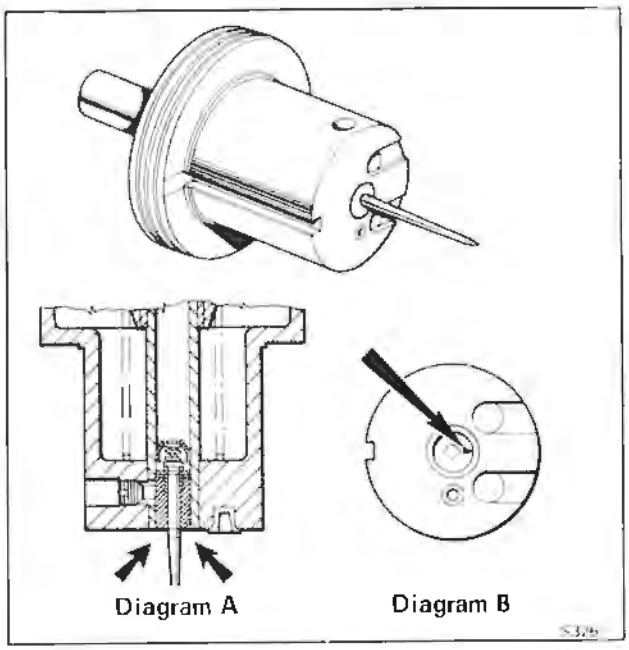

Fig. U31 Spring-loaded jet needle

Diagram A
Needle guide height setting
Diagram B
Needle guide alignment setting

Printed in England
© Rolls-Royce Motors Limited 1977
January 1977
S.D. 4200
Japan)

Carburetters and air horns assembly - To remove
Before commencing to remove the carburetters observe the following points.
1. When disconnecting the various hoses, pipes and wiring connections ensure that they are suitably labelled to assist identification when assembling.
2. Ensure that all open ends of pipes, hoses, etc. are suitably blanked off to prevent the ingress of dirt, etc.
3. Ensure that the usual safety precautions are carried out (i.e. parking brake firmly applied, gear range selector lever in Park, battery disconnected, etc.).

To remove the carburetter and air horn assembly proceed as follows
From 'A' bank side
1. Remove the air intake elbow casting (refer to Air intake - To remove in Chapter K).
2. Disconnect the fuel feed and recirculation pipes adjacent to 'A' bank carburetter.
3. Withdraw the 'Lucar' electrical connections from the E.G.R. full throttle cut-out micro-switch.
4. Withdraw the 'Lucar' electrical connections from the speed control unit. Disconnect the chain link from the throttle linkage to the speed control unit. Withdraw the vacuum hose from the speed control unit. Unscrew and remove the 'steady' bolt from the speed control bracket.
5. Remove the split pin, washer and clevis pin from the throttle linkage just forward of 'A' bank carburetter.

From 'B' bank side
6. Disconnect the E.G.R. feed pipe upper joint (refer to E.G.R. feed pipe - To remove, Section U2).
7. Unscrew the union on the choke stove pipe at the bi-metal housing.
8. Unscrew the fuel feed pipe union at 'B' bank carburetter filter housing.
9. Remove the crankcase emission control system pipe from the choke butterfly housing; withdraw the housing from the end of the pipe.
10. Disconnect the electrical cables to the choke solenoid at the 'snap connector' joints, adjacent to the butterfly housing.
11. Disconnect the 'Lucar' electrical connections to the anti run-on solenoid, E.G.R. cut-off solenoid and the weakening device cut-off solenoid.
12. Detach the following hoses from the weakening device.
a. the hose from the float chamber vent valve
b. the hose from the fuel receiver
c. the hose to the air filter
d. the hose from the venturi chamber

These hoses are labelled A, H, G and D in Figure U4.
13. Disconnect the purge line at the restrictor.
14. Unscrew the 7/16 in. A/F nut from the dipstick bracket; collect the washer.
15. Unscrew the ½ in. A/F setscrew from the centre of the carburetter 'tee' piece; withdraw the setscrew and washer.
16. Carefully withdraw the carburetters and air horn assembly, ensuring that no pipes, hoses or electrical items are still connected.

Carburetters and air horns assembly - To fit
Fit the carburetters by reversing the procedure given for their removal, noting the following points.
1. Ensure that all joint faces are clean.
2. Fit new gaskets.

Carburetters - To remove
Remove the carburetters and air horn assembly from the car (refer to Carburetters and air assembly - To remove) and then, remove the carburetters from the air horns assembly as follows.

'A' bank carburetter
1. Unscrew the two ½ in. A/F nuts securing the air horn to 'A' bank carburetter.
2. Withdraw the bolts, collect the washers and the E.G.R. full throttle cut-out micro-switch mounting bracket.
3. Move the air horn flange upwards away from the carburetter.
4. Unscrew the union from the fuel filter.
5. Detach the vacuum supply hose from on top of the carburetter body adjacent to the carburetter and 'tee' piece flange.
6. Detach the hose from the side of the carburetter that connects to the fuel receiver in the weakening device.
7. Completely remove the two pinch bolts securing the throttle levers to the 'A' and 'B' bank carburetter butterfly spindles, remove the levers.
8. Unscrew the nut and withdraw the pinch bolt securing the 'fast-idle' lever to the carburetter spindle; withdraw the lever.
9. Unscrew the four half-nuts that retain the carburetter to the 'tee' piece flange; collect the washers.
10. Withdraw the carburetter and collect the gasket.

'B' bank carburetter
1. With a screwdriver, unscrew and remove the two screws securing the solenoid platform in position adjacent to 'B' bank carburetter. One screw is located on the air horn and has a nut underneath, and the other screw is situated in the filter housing.
2. Unscrew the ½ in. A/F nuts from the bolts that retain the air horn to the carburetter flange; withdraw the bolts and collect the washers. Move the solenoid platform away from the carburetter.
3. Detach the hose from the side of the carburetter to the fuel receiver in the weakening device.
4. Carefully ease the air horn upwards away from the carburetter.

5. Completely remove the two pinch bolts securing the throttle levers to the 'A' and 'B' bank carburetter butterfly spindles remove the levers.
6. Detach the vacuum supply hose from on top of the carburetter body adjacent to the carburetter and 'tee' piece flange.
7. Unscrew the remaining union from the fuel filter housing.
8. Unscrew the four half-nuts that retain the carburetter to the 'tee' piece flange, collect the washers.
9. Withdraw the carburetter and collect the gasket.

Dismantling of the components within the carburetters is not recommended as all carburetters are set and balanced by accurate flow measuring techniques during manufacture.

In certain isolated instances however, it maybe necessary to dismantle the carburetters and under these conditions the following procedure should be carefully followed.

Carburetter - To dismantle
Upper half (see Fig. U32)
1. Thoroughly clean the outside of the carburetter.
2. Unscrew the suction chamber retaining screws and remove the identity tag.
3. Lift the chamber assembly vertically from the body without tilting it.
4. Hold the piston firmly and pull the suction chamber, taking care not to bend the damper rod, until the damper retainer is freed from the piston rod. Unscrew and remove the damper.
5. Remove the piston spring, lift out the piston assembly and empty the oil from the piston rod.
6. Note the position of the needle guide etch mark in relation to the piston transfer holes for correct reassembly and unscrew the needle guide locking screw.
7. Withdraw the needle, guide and spring.

Lower half (see Fig. U33)
8. Mark the bottom cover-plate and body to ensure correct reassembly, unscrew the retaining screws and remove the cover complete with the sealing ring.
9. Remove the jet adjusting screw complete with 'O' ring.
10. Remove the jet adjusting lever retaining screw and spring.
11. Withdraw the jet complete with adjusting lever and disengage the lever.
12. Remove the float pivot spindle and aluminium washer.
13. Withdraw the float.
14. Remove the needle valve and unscrew the valve seat.
15. Unscrew the jet bearing locking nut and withdraw the bearing complete with fibre washer.

Throttle disc assembly (see Fig. U34)
16. Remove the throttle disc retaining screws.
17. Close the throttle and mark the position of the throttle disc in relation to the carburetter flange. **Do not mark the disc in the vicinity of the overrun valve.** Open the throttle and carefully withdraw the disc from the throttle spindle taking care not to damage the overrun valve.
18. Withdraw the throttle spindle and remove the seals, noting the way it is fitted in relation to the carburetter body to ensure correct reassembly.

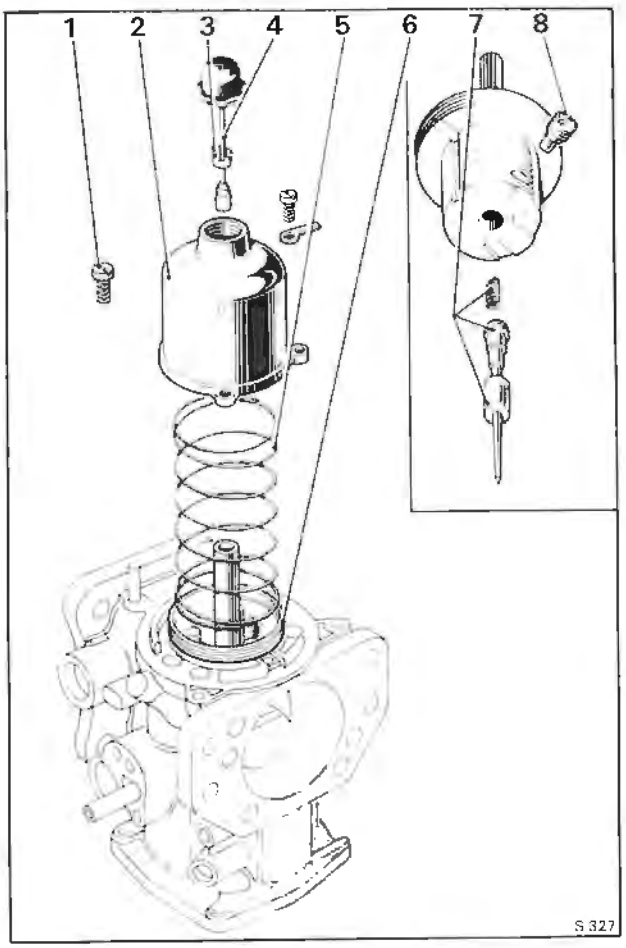

Fig. U32 Dismantling a carburetter (Upper half)
1 Suction chamber retaining screw
2 Suction chamber
3 Damper retainer (Piston ball race clip)
4 Damper rod
5 Spring
6 Piston
7 Spring-loaded needle assembly
8 Needle guide locking screw

Printed in England
© Rolls-Royce Motors Limited 1977
January 1977
T.S.D. 4200
(Japan)

Carburetter - To inspect

1. Examine the throttle spindle and its bearings in the carburetter body; check for excessive play, and fit new parts if necessary.
2. Examine the float needle and seating for damage and excessive wear; fit new parts if necessary.
3. Examine all rubber seals and 'O' rings for damage or deterioration; fit new parts if necessary. **The cover-plate sealing ring must be renewed.**

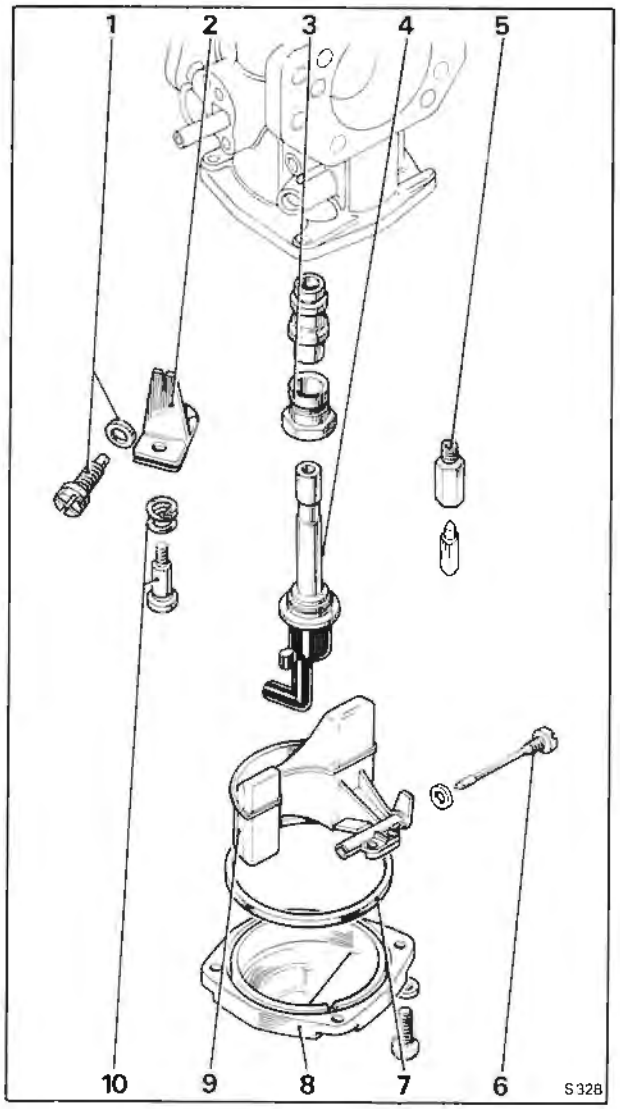

Fig. U33 Dismantling a carburetter (Lower half)

1 Jet adjusting screw and 'O' ring
2 Jet adjusting lever
3 Jet bearing assembly
4 Jet
5 Float chamber needle valve
6 Float pivot spindle
7 Sealing ring
8 Bottom cover plate
9 Float
10 Jet lever adjusting screw

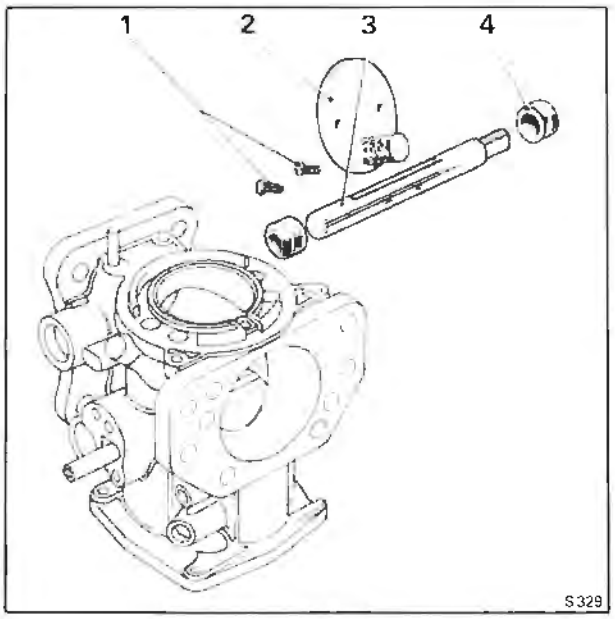

Fig. U34 Dismantling a carburetter (Throttle disc assembly)

1 Throttle disc retaining screws
2 Throttle disc assembly
3 Throttle spindle
4 Seal

4. Examine the carburetter body for cracks and damage and for security of the brass connections and the piston key.
5. Clean the inside of the suction chamber and piston rod guide with fuel or methylated spirit (denatured alcohol) and wipe dry. **Abrasives must not be used.**
6. Examine the suction chamber and piston for damage and signs of scoring.
7. Check that all the balls are in the piston ball race (2 rows, 6 per row). Fit the piston into the suction chamber, without the damper and spring, hold the assembly in a horizontal position and spin the piston. The piston should spin freely in the suction chamber without any tendency to stick.

Carburetter - To assemble

Assemble the carburetter by reversing the procedure given for removal, noting the following points.

1. Ensure that the throttle disc is fitted in its original position.
2. New throttle disc retaining screws must be used when refitting the disc. Ensure that the throttle disc is correctly positioned and closes correctly before tightening the retaining screws. Spread the split ends of the screws sufficiently to prevent turning.
3. Position the throttle spindle end seals just below the spindle housing flange.
4. When fitting the jet assembly to the adjusting lever ensure that the jet head moves freely in the bi-metal cut-out.

5. Fit a new float pivot spindle sealing washer or anneal the existing washer.

Check the level of the float in the float chamber (refer to Carburetter float level - To set).

6. Check that the small diameter of the jet adjusting screw engages the slot in the adjusting lever and set the jet 3,05 mm. (0.12 in.) below the bridge of the body.

7. Ensure that the needle guide etch mark aligns correctly with the piston transfer holes. After fitting the needle assembly, check that the shoulder of the guide aligns with the face of the piston (see Fig. U31).

8. To prevent the piston spring from being 'wound up' during reassembly, temporarily fit the piston and suction chamber, less the piston spring, to the body and pencil mark their relative positions to each other. Fit the spring to the piston, hold the suction chamber above the piston, align the pencil marks and lower the chamber over the spring and piston.

Before assembly ensure that the damper retainer (piston ball race clip) is refitted by pressing it fully into the piston rod (see Fig. U35).

The damper retainer (piston ball race clip) can also be installed with the suction chamber fitted to the engine by using fitting tool RH 9086.

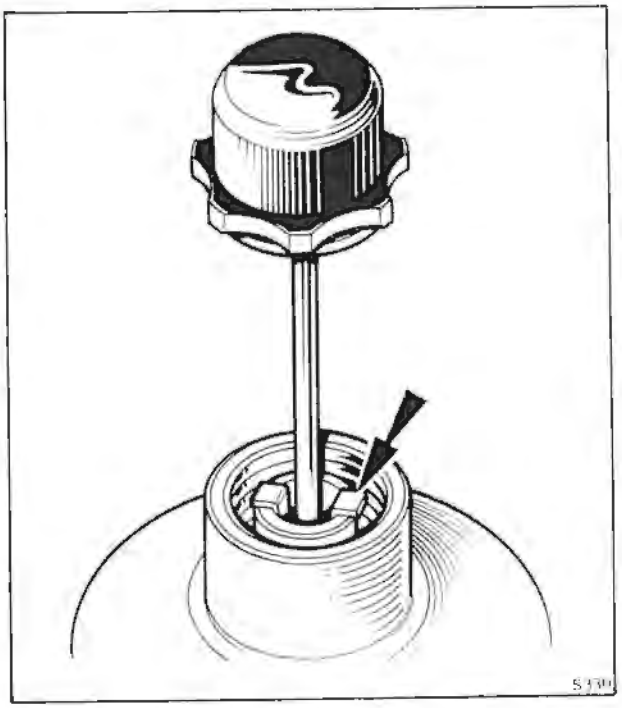

Fig. U35 Position of damper retainer

Carburetter float level - To set

1. Remove the carburetter from the engine.

2. Invert the carburetter.

3. Mark the bottom cover-plate and carburetter to ensure correct assembly, unscrew the retaining screws and remove the cover complete with the sealing ring.

A new rubber sealing ring must be installed when fitting the cover-plate.

4. Ensure that the float chamber needle valve is held in the closed position by the weight of the float only.

5. Check that the lowest point on the float (see Fig. U36) is either level with the float chamber face, or up to 1,52 mm. (0,060 in.) below.

6. If necessary, adjust the float position by carefully bending the brass pad.

7. Check that the float pivots correctly about the spindle.

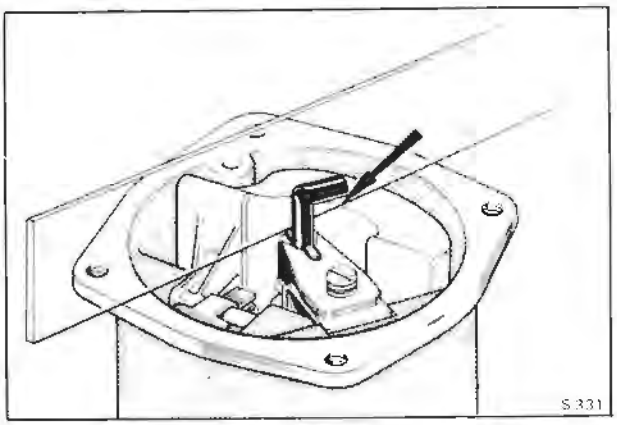

Fig. U36 Checking the float level

Carburetter air valve damper - To top-up

The upper portion of the guide spindle, attached to the air valve piston in each carburetter, is hollow and is filled with the same type of oil as used in the engine.

1. Unscrew the damper cap and carefully raise the damper until the damper, **together with the air valve piston**, reach the top of their travel. Ensure that the retainer is not displaced from its position in the piston rod (see Fig. U35).

2. Holding the damper and piston in the raised position, fill the recess in the damper retainer (piston ball race clip) with clean engine oil.

3. Lower the damper until the cap contacts the neck of the suction chamber, then carefully raise the damper and piston again and check the oil level; this is correct if the oil level is just visible in the bottom of the recess in the damper retainer (piston ball race clip). If the oil level is not visible, repeat the topping-up procedure until the oil level is correct.

4. Check that the damper retainer (piston ball race clip) is still in its correct position in the piston rod as shown in Figure U35, then lower the damper and screw the damper cap firmly into position.

Printed in England
© Rolls-Royce Motors Limited 1977
January 1977
T.S.D. 4200
(Japan)

If the damper retainer (piston ball race clip) becomes inadvertently displaced during the topping-up procedure or if the damper should be removed from the piston, do not fit the damper cap or run the engine until the retainer has been returned to its correct position in the piston rod. The special tool RH 9086 should be used to fit damper retainer (piston ball race clip).

Carburetter throttle linkage - To fit and set (see Fig. U37)

1. Assemble 'A' bank and 'B' bank throttle levers (items 6 and 11) onto the carburetter spindles.
2. Fit the setting jig (RH 8880) into position on the throttle levers.
3. Fully close 'B' bank carburetter butterfly (item 7).
4. Tighten the pinch bolt securing 'B' bank throttle lever.
5. Fully close 'A' bank carburetter butterfly (item 2).
6. Tighten the pinch bolt securing 'A' bank throttle lever.
7. Fit the throttle spring (item 3) to the throttle levers.
8. Remove the setting jig from the throttle levers.
9. Fit the cross link guide bracket (item 9) to the carburetter 'tee' piece (item 5). Secure in position with two small screws which should be 'locked' using two tabs washers.
10. Fit the cross link (item 10) and the eccentric throttle adjuster (item 4) onto the throttle levers, ensuring that both throttle butterflies are closed when adjusting and tightening the eccentric adjuster.

Note
The eccentric pin should be set in the lowest position possible.

11. Ensure that the cross link guide (item 9) has a clearance of between 1,27 mm. (0.050 in.) and 1,78 mm. (0.070 in.) with the cross link. If necessary bend the guide to give these clearances.
12. Check that the throttle linkage moves freely.
13. Fit the idle stop screw (item 8) and lock plate; adjust until the screw just contacts the stop bracket (item 9) with the throttle butterflies remaining in the closed throttle position.
14. Screw down the idle stop screw ½ turn.
15. Connect one end of the drive link (item 12) to the 'B' bank throttle lever and the other end, to the manifold shaft lever (item 13).
16. Operate the linkage to ensure free movement.
17. With the throttles in the closed position check that the 'A' bank control shaft to control rod lever (item 14) on the rear of the manifold shaft is in line with the front manifold shaft lever (item 13). Tighten the securing bolts on both levers.
18. Operate the mechanism; check for freedom of movement within the linkage and also clearance with the various engine components.
19. To set the remainder of the linkage from the control rod lever on the rear of the manifold shaft to the accelerator pedal refer to Chapter T - Transmission.

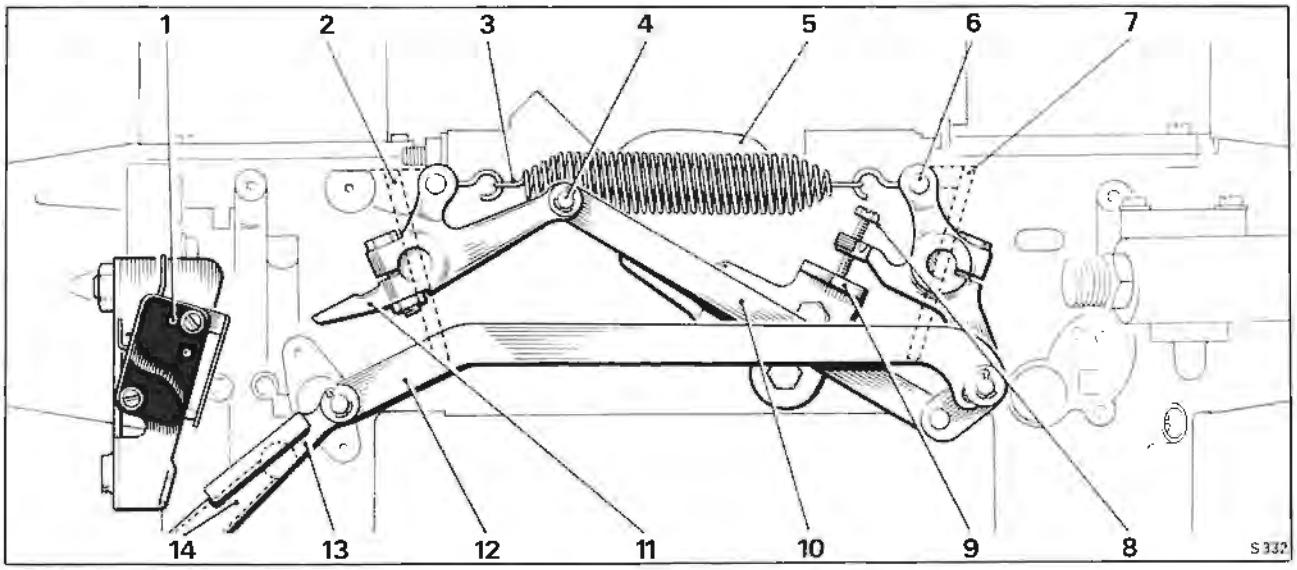

Fig. U37 Carburetter throttle linkage

1	E.G.R. full throttle cut-out micro-switch	8	Idle stop screw
2	'A' bank carburetter throttle butterfly	9	Throttle cross link guide bracket
3	Throttle spring	10	Cross link
4	Eccentric throttle adjuster	11	'A' bank carburetter throttle lever
5	Carburetter 'tee' piece	12	Drive link
6	'B' bank carburetter throttle lever	13	Front manifold shaft lever
7	'B' bank carburetter throttle butterfly	14	Rear manifold shaft lever

Printed in England
© Rolls-Royce Motors Limited 1977
January 1977
T.S.D. 4200 (Japan)

Carburetters - To set

The carburetters fitted to these cars are adjusted at the factory using **special equipment** to ensure that their settings comply with the current emission control regulations.

Under normal circumstances the carburetters should not require adjustment in service.

If however, adjustment is found necessary due to inadvertent disturbance or replacement of a component set the carburetters by carrying out the following operations in the sequence given.

a. Set throttle linkage and temporarily set engine idle speed. Check linkage clearances.
b. Set cold start fast-idle cam.
c. Tune carburetters.
d. Set cold start fast-idle speed.
e. Set the kick-down micro-switch.
f. Set full throttle stop and full throttle E.G.R. cut-off micro-switch.

Carburetter tuning

Preliminary checks

Before tuning the carburetters the following checks should be carried out.

Ensure that the vehicle is in 'Park', the parking brake firmly applied and that the gear range actuator thermal cut-off has been removed from the main fusebox.

1. Check the condition of the spark plugs.
2. Check the ignition timing.
3. Check the flow through the choke stove pipe.
4. Check the entire induction system for air leaks.
5. Check the purge line flow rate.
6. Ensure that the air conditioning system is switched off.
7. Start the engine and warm up; allow to run for at least 5 minutes after the thermostat has opened.
8. Stop the engine, ensure that the choke butterfly valve is fully open and the choke fast-idle off.
9. Connect an electric impulse tachometer in accordance with manufacturer's instructions.
10. Check the float chamber depression.
11. Check the exhaust gas recirculation system for correct operation.
12. Check and set the full throttle exhaust gas recirculation cut-out micro-switch.

Carburetter idle air balance

1. Ensure that the usual safety precautions are carried out (i.e. parking brake firmly applied, gear range selector lever in Park, etc.) and connect an impulse tachometer in accordance with the manufacturer's instructions.
2. Disconnect the speed control chain.
3. Start and run the engine until normal operating temperature is attained.
4. Stop the engine.
5. Fit the dial gauges RH 9105 with RH 8841 (kit to convert dial gauges to fit the HIF7 carburetters) to the carburetter dashpots in place of the dampers.
6. Zero the gauges with the engine stopped and lightly tighten the gauge clamp screws.
7. Start and run the engine at the idle speed setting (650 r.p.m.); adjust the carburetter piston lifts to be equal (within 10%) using the eccentric adjuster (see Fig. U37).
8. The average piston lift reading should now be between 2,03 mm. and 2,54 mm. (0.080 in. and 0.100 in.).

If the idle speed piston lift is over 2,54 mm. (0.100 in.) check the ignition timing at idle as this condition may result in unsatisfactory driveability.

9. Stop the engine and remove the impulse tachometer.
10. Remove the dial gauges and fit the carburetter dampers. **Ensure that the dashpot ball race clips (piston damper retainers) are fitted correctly and are pressed fully into the piston rod (see Fig. U35) using tool RH 9086.**
11. Connect the speed control chain and adjust to give a minimum slack condition, consistant with no impediment to the throttle lever to return to the idle speed position.

Carburetter mixture strength - To set

1. Ensure that the usual safety precautions are carried out (i.e. parking brake firmly applied, gear range selector lever in Park, etc.) and connect an impulse tachometer in accordance with the manufacturer's instructions.
2. Remove the air intake, blank off the hot idle compensator feed drilling (see Fig. U38) and replace the intake.

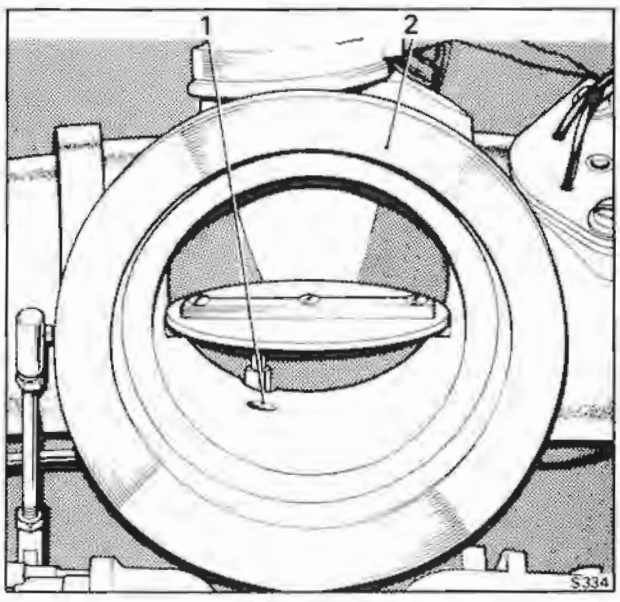

Fig. U38 Hot idle mixture compensator feed
1 Hot idle compensator feed
2 Air intake butterfly housing

3. Remove the air inlet hose from the air injection system pressure relief valve and fit a blank over the valve (a suitable blank may be produced from a short length of rubber hose with one end plugged).

Note
The air injection system is inoperative when the relief valve inlet air hose is disconnected from the air pump. The valve must be blanked to prevent air being drawn into the exhaust port by pulsations in the exhaust system since this would affect the idle CO reading.

4. Disconnect the E.G.R. cut-off solenoid to carburetter signal hose at the solenoid, blank off the hose.
5. Unscrew and remove the pressure tapping cap from the weakening device.
6. Ensure that the engine has run for at least 25 minutes after the thermostat has opened.
7. Purge the engine at 2 000 r.p.m. in Neutral for ¼ minute. Allow the engine speed to return to the idle setting and ensure that this is 650 r.p.m.; adjust if necessary using the idle stop screw.
8. Insert the probe of a CO meter into either exhaust system tailpipe and check the reading.

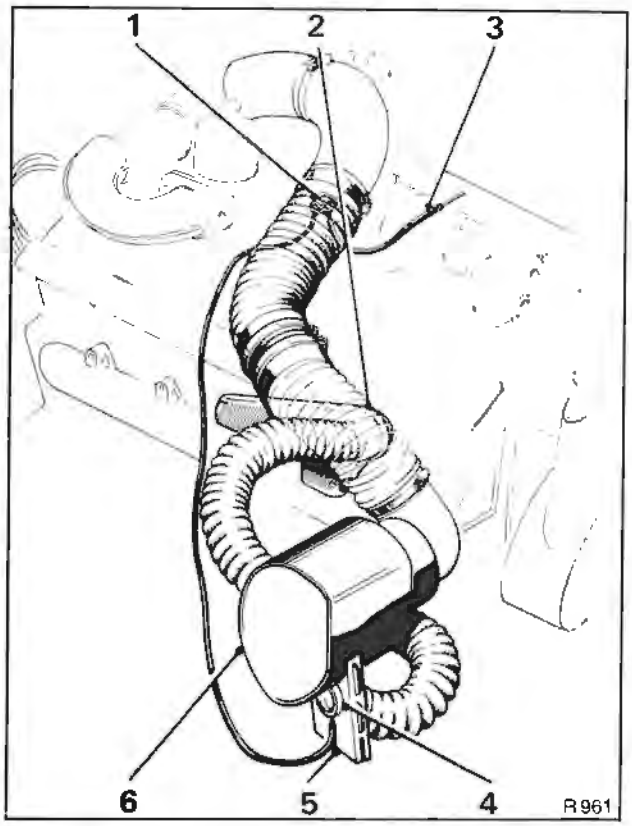

Fig. U39 Temperature controlled air intake
1 Temperature sensor
2 Hot air scoop
3 Manifold vacuum hose
4 Air blend valve
5 Cold air intake
6 Air cleaner/silencer

9. The CO meter reading should be 1% to 4%. If the reading is outside the limits quoted
a. Check for induction system leaks (if below 1%)
b. Check the choke stove and purge line flow rates.
10. If after carrying out Operation 8 the idle speed CO meter reading is still outside the limits quoted, the carburetter mixture screws (see Fig. U29) may be adjusted by equal amounts up to ½ turn in the same direction in order to achieve the mean limit of 2.5%. No attempt should be made to adjust the CO reading if it is in the region of 2.5% to 4.0%.

Note
a. Clockwise rotation of the mixture screws will richen the mixture.
b. The tuning operations should be carried out in the shortest possible time. If the time exceeds 3 minutes, run the engine at 2 000 r.p.m. in Neutral for ¼ minute and then resume the tuning operations. Repeat this purging operation if a further period of 3 minutes is exceeded.

After purging the system gently tap all around the neck of the carburetter suction chamber with a lightweight non-metallic object (i.e. the wooden handle of a small screwdriver), to eliminate carburetter piston hysteresis. The engine is to be run on Indolene Clear (HO) reference fuel or equivalent (Unleaded gasoline only).

11. Stop the engine.
12. Fit the pressure tapping cap to the weakening device, fit a new sealing washer if necessary.
13. Remove the blank from the air pressure relief valve and connect the feed hose from the air pump to the relief valve.
14. Remove the blank from the E.G.R. cut-off solenoid to carburetter signal hose and connect the hose to the E.G.R. cut-off solenoid.
15. Start the engine and check the idle speed, this should be 650 r.p.m.; adjust by means of the idle stop screw (refer to Section U6).
16. Stop the engine, remove the air intake and discard the blank from the hot idle compensator feed drilling; fit the air intake.
17. Remove the impulse tachometer.

Carburetter tamperproofing
Both carburetter mixture screws **must** have tamper-proof caps fitted upon completion of the setting operation.

Special tools have been designed and produced for the fitting of the tamperproof caps as follows.
'A' bank carburetter mixture screw cap - RH 9096
'B' bank carburetter mixture screw cap - RH 9097

Temperature controlled air intake

To ensure rapid warm-up and improve control of the air/fuel ratio a temperature controlled air intake is fitted (see Fig. U39).

A vacuum operated blending valve attached to the air cleaner assembly is controlled by a thermal sensor in the air intake elbow. This valve blends hot

air from a pick-up point (scoop) adjacent to the exhaust manifold with cold air from under the front wing; thus maintaining a constant temperature of the intake air as it enters the carburetters.

All other details for the Temperature Controlled Air Intake System are given in Chapter K except for the checking procedure which is as follows.

Temperature controlled air intake - To check

1. Disconnect the air intake hose at the intake elbow and check that the correct temperature sensor is fitted, this should be colour coded white.
2. Disconnect the hose from the temperature sensor to the underwing air silencer, at the temperature sensor.
3. Clean the end of the hose, place in the mouth and apply a vacuum by sucking. Check that there is no air leak. Release the vacuum sharply end listen for the vacuum motor within the wing to 'click' open.
4. Reconnect the hoses.

Note

If there is an air leak or the operation of the temperature controlled air intake is suspect, remove the right-hand front underwing sheet and check the hose connection to the vacuum motor; also observe the operation of the temperature flap.

Printed in England
© Rolls-Royce Motors Limited 1977
January 1977
T.S.D. 4200
(Japan)

Section U6

Ignition system

Data

Ignition timing	9° B.T.D.C. (Static) 15° B.T.D.C. at 1 200 r.p.m. 7° - 13° B.T.D.C. at idle speed (650 r.p.m.) (Approach 1 200 r.p.m. from a higher speed).

Ignition control system

The ignition system utilises an Opus distributor (in which an oscillator pick-up and control unit replace the conventional contact breaker), a high load ignition coil and a ballast resistor. The control unit comprises an electronic oscillator, amplifier and power transistor.

A drum with eight ferrite rods (one per cylinder) moulded into the outer edge is mounted onto the distributor drive-shaft. As the drum rotates a voltage is created each time a ferrite rod passes the oscillator pick-up, this signal is then amplified and used to switch-off the normally conducting power transistor in the primary coil circuit thus inducing a high voltage in the secondary winding which is distributed to the sparking plugs in the normal manner.

The distributor has a conventional centrifugal advance mechanism.

The Opus distributor provides increased accuracy of timing and increased service life before maintenance is required.

For the removal and fitting instructions of the ignition system components refer to Chapter M.

Ignition - To time (using a stroboscope)

The ignition is timed on A1 cylinder which is located at the front left-hand side of the engine (viewed from the front of the car).

Note

If the ignition timing is to be set, ensure that the sparking plugs are in good condition before running the engine; if they require cleaning or renewal the sparking plugs gap should be set to 0,9 mm. (0.035 in.).

1. To check the ignition timing commence by running the engine until normal operating temperature is attained and the choke 'fast-idle' is in the off position. Switch off the engine.
2. Connect a stroboscope and a tachometer to the engine as described in the instructions supplied with the respective equipment.
3. Start the engine and adjust the throttle stop screw to give an idle speed of 1 200 r.p.m. When setting the engine idle speed reduce from a higher speed to 1 200 r.p.m.
4. Direct the flashing light of the stroboscope onto the crankshaft damper timing marks and timing pointer; the pointer is positioned on the right-hand side of the crankshaft damper when viewed from the front of the engine.
5. If the timing pointer does not coincide with the 15° B.T.D.C. mark on the crankshaft damper adjust the ignition timing as follows.
6. Release the clamp screw on the distributor and rotate the head of the distributor in the appropriate direction until the correct timing is obtained. Clockwise rotation of the distributor head advances the ignition and conversely anti-clockwise rotation retards the ignition. After adjustment has been carried out tighten the clamp screw and again check to ensure that the timing has not altered whilst tightening the clamp screw.
7. Set the engine idle speed to 650 r.p.m.
8. Direct the flashing light of the stroboscope onto the crankshaft damper timing marks and timing pointer. Check that the ignition timing is approximately 7° - 13° B.T.D.C.
9. Stop the engine and remove all the test equipment.

Setting the engine idle speed

Ensure that the engine is at normal operating temperature and that the choke 'fast-idle' is in the off position.

The air conditioning system must be switched off and a tachometer connected to the engine in accordance with the manufacturer's instructions.

1. Stop the engine, remove the air intake and blank off the hot idle compensator feed drilling (see Fig. U38); replace the air intake.
2. Start the engine and, if necessary, adjust the engine idle speed to 650 r.p.m. using the throttle stop screw.
3. Stop the engine and remove the air intake. Remove the blank from the hot idle compensator feed drilling and fit the air intake. Detach the tachometer and stroboscopic timing equipment.

Distributor maintenance

The distributor requires no routing maintenance except that, at the mileage intervals specified in the Service Schedules, the moulded cover and H.T. rotor arm should be removed and the spindle shaft bearings lubricated by inserting a few drops of

Printed in England
© Rolls-Royce Motors Limited 1979
November 1979
T.S.D. 4200
(Japan 1977 Model year)

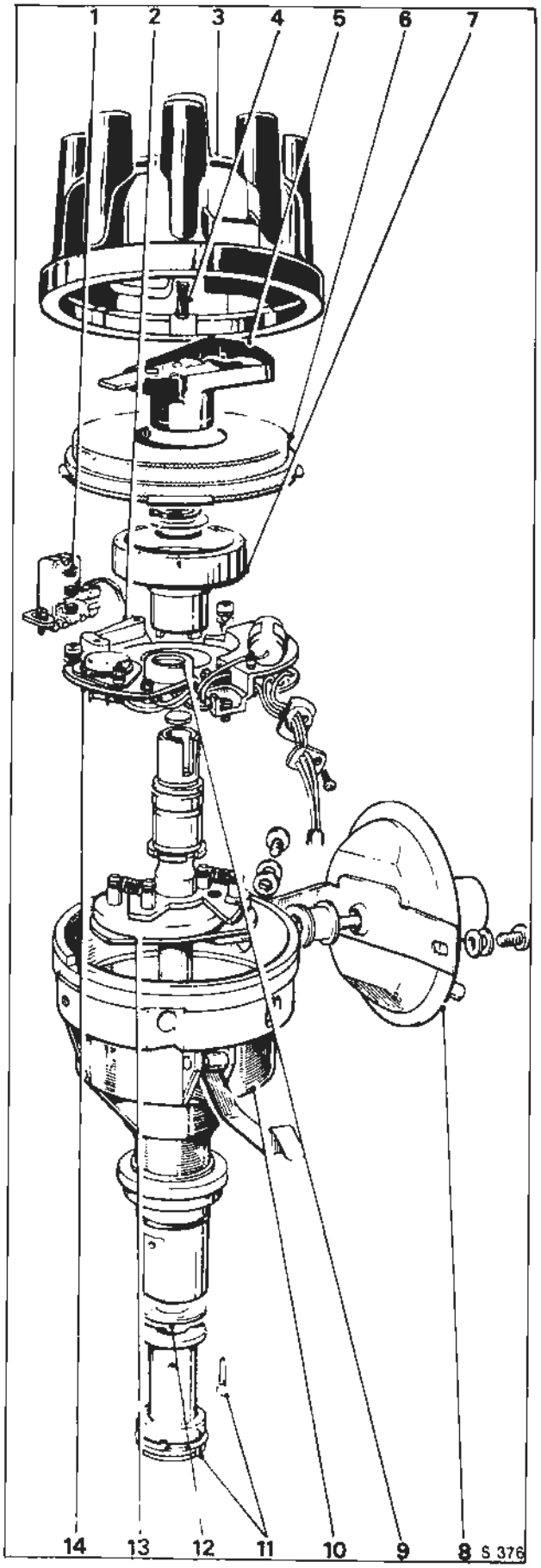

engine oil onto the felt pad. The automatic advance mechanism should also be lubricated at this time with a few drops of engine oil inserted through apertures in the base plate.

Sparking plugs
The sparking plugs approved for this car are Champion RN 14Y. Before fitting the plugs, set the gaps with the aid of a feeler gauge to 0,9 mm. (0.035 in.) and lightly smear the threads with 'Graphogen' grease.

Fig. U40 Ignition distributor

1 Pick-up module
2 Pick-up arm
3 Distributor cover (cap)
4 High tension brush and spring
5 Rotor arm
6 Flash over shield (dust cover)
7 Timing rotor
8 Vacuum advance unit (not connected)
9 Control unit
10 Distributor body
11 Driving dog and pin
12 Thrust washer
13 Automatic advance mechanism
14 Electronic module assembly

Section U7

Electrical components

The electrical components described in this section would normally appear in Chapter M - Electrical System, however, as they are only used in connection with the emission control system it is thought more practical to include the information in this Chapter.

The components concerned are as follows.

E.G.R. system and weakening system lock-out switch
E.G.R. system cut-off solenoid
Anti 'run-on' solenoid
Weakening system cut-off solenoid
Full throttle E.G.R. cut-off micro-switch
Catalytic converter and body floor overheat warning system

E.G.R. system and weakening system lock-out switch

The bi-metal lock-out switch is situated in the side of the air intake elbow adjacent to the choke stove take-off pipe and 'B' bank carburetter (see Fig. U41).

E.G.R. system and weakening system lock-out switch - To remove

1. Withdraw the protective sheath and detach the electrical connections, noting the position of the connections to assist identification when assembling.
2. Unscrew and remove the three setscrews and spring washers.
3. Withdraw the lock-out switch.

E.G.R. system and weakening system lock-out switch - To fit

Fit the lock-out switch by reversing the procedure given for removal.

1. Ensure that the gasket is in a good condition.
2. The setscrews must be fitted with spring washers.
3. The protective sheath must be fitted over the electrical connections.

E.G.R. system and weakening system lock-out switch circuit wiring - To check

1. Detach the 9 White/Blue cable from the weakening system lock-out switch.
2. Fit one side of a test lamp to the 9 White/Blue cable and the other side to a good earth.
3. Switch on the ignition noting that the test lamp bulb illuminates.
4. Switch off the ignition noting that the test lamp bulb extinguishes.

E.G.R. system and weakening system lock-out switch - To check

1. Withdraw the protective sheath from the electrical connections.
2. Do not disturb any wiring but connect both electrical connections via a test lamp.
3. Ensure that the engine is cold i.e. intake air temperature below approximately 14°C. (57°F.) and switch on the ignition.
4. Check that the test lamp bulb is illuminated.
5. Start and run the engine; as the engine warms-up i.e. the inlet air temperature exceeds approximately 14°C. (57°F.) the test lamp bulb should extinguish.

E.G.R. system cut-off solenoid

This assembly is situated rearmost of the three solenoid assemblies mounted on a platform, adjacent to the 'B' bank carburetter (see Figs. U4 and U41).

E.G.R. system cut-off solenoid - To remove

1. Detach the electrical connections, noting the position of the connections to assist identification when assembling.
2. Detach the rubber hose from either side of the solenoid.
3. Unscrew the two 'cheese-headed' mounting screws and withdraw the solenoid.

E.G.R. system cut-off solenoid - To fit

Fit the cut-off solenoid by reversing the procedure given for removal.

E.G.R. system cut-off solenoid circuit wiring - To check

1. Disconnect the 9 White and 14 White/Green cables at the solenoid 'Lucar' connections.
2. Connect a test lamp across the two disconnected cables (in place of the solenoid).
3. Ensure that the engine is cold.
4. Switch on the ignition and note that the bulb of the test lamp is illuminated.
5. Start and run the engine, as the engine coolant temperature exceeds approximately 14°C. (57°F.) the test lamp bulb should extinguish.
6. Depress the full throttle cut-out micro-switch plunger and check to ensure that the test lamp bulb illuminates. Release the plunger and the test lamp bulb should extinguish.

Printed in England
© Rolls-Royce Motors Limited 1977
January 1977
T.S.D. 4200 (Japan)

E.G.R. system cut-off solenoid - To check

1. Detach the carburetter vacuum signal to E.G.R. cut-off solenoid hose at the solenoid and blank off the hose.

Connect a suitable length of hose to the solenoid connection.

2. Clean the open end of the additional hose.
3. Switch on the ignition.
4. Place the hose in the mouth and apply suction.
5. If the operation of the solenoid is correct note that the following conditions apply.

a. With an engine air intake temperature of below approximately 14° C. (57° F.) blowing air through the hose **should not** be possible.

b. With an engine air intake temperature of above approximately 14° C. (57° F.) blowing air through the hose **should** be possible.

c. As the engine air intake temperature falls to 12° C. (54° F.) the conditions described in (a) should again apply.

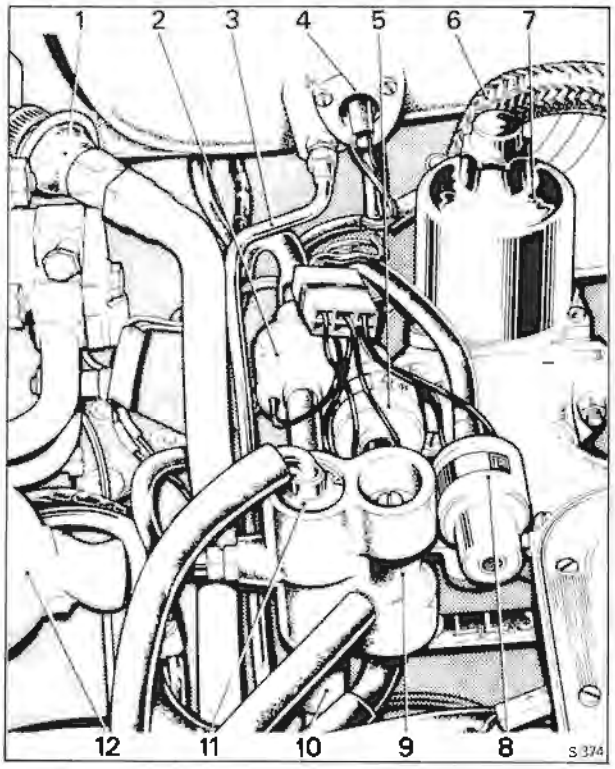

Fig. U41 Solenoid platform

1 Check valve
2 Anti 'run-on' solenoid
3 Choke stove pipe
4 Weakening device and E.G.R. lock-out switch
5 Weakening device cut-off solenoid
6 Exhaust gas distribution pipe
7 'B' bank carburetter
8 E.G.R. cut-off solenoid
9 Mixture weakening device
10 Fuel receiver
11 Float chamber vent valve
12 Engine oil filler cap

6. If the operation of the solenoid is suspect, fit a new unit.

Anti 'run-on' solenoid

The anti 'run-on' solenoid is situated on a platform adjacent to 'B' bank carburetter; it is the foremost of the three solenoids fitted on the platform.

The use of low octane fuel often causes an engine to 'diesel' (i.e. to continue to run-on after the ignition has been switched off, particularly when the engine is hot). To prevent this an anti 'run-on' solenoid is fitted between the fuel receiver and the induction manifold (see Figs. U4 and U41). When the ignition is switched off the solenoid valve opens and connects the weakening system to the induction manifold, thus creating a high depression in the float chambers which cuts off the fuel supply.

Anti 'run-on' solenoid - To remove

1. Disconnect the rubber hose from either side of the solenoid.
2. Disconnect the two electrical leads at their 'Lucar' connections.
3. Unscrew and remove the two screws situated one on either side of the solenoid body.
4. Withdraw the anti 'run-on' solenoid.

Anti 'run-on' solenoid - To fit

Fit the anti 'run-on' solenoid by reversing the procedure given for removal.

Anti 'run-on' solenoid circuit wiring - To check

1. Connect a test lamp across the two 'Lucar' connections to the solenoid. **Do not disconnect the two connections.**
2. Switch on the ignition and check that the test lamp bulb illuminates.
3. Switch off the ignition and check that the test lamp bulb is extinguished.

Anti 'run-on' solenoid - To check

1. Ensure that the usual safety precautions are carried out (i.e. parking brake firmly applied, gear range selector lever in Park, etc.).
2. Connect an impulse tachometer in accordance with the manufacturer's instructions.
3. Detach the weakening device pressure tapping cap (see Fig. U24) and connect a manometer capable of reading 0 to 15,5 cm. (0 to 6 in.) of water to the tapping.
4. Disconnect the carburetter vacuum signal to E.G.R. cut-off solenoid hose at the solenoid. Blank off the hose.
5. Start and run the engine at the idle speed setting (650 r.p.m.).
6. Switch off the engine and observe the reading on the manometer. The reading should momentarily increase to approximately 15,5 cm. (6.0 in.) as the engine stops.

7. If the reading does not increase, the operation of the anti 'run-on' solenoid is incorrect.
This could be caused by the following.
a. A blockage in the hose (see Fig. U24) from the anti 'run-on' solenoid to the weakening device.
b. A blockage in the hose (see Fig. U24) from the anti 'run-on' solenoid to the vacuum manifold or in the vacuum manifold.
c. Incorrect wiring to the anti 'run-on' solenoid.
d. Faulty anti 'run-on' solenoid.

Weakening system cut-off solenoid

The weakening device cut-off solenoid is the central of the three solenoids mounted on the platform adjacent to 'B' bank carburetter (see Figs. U4 and U41).

Weakening system cut-off solenoid - To remove

1. Detach the electrical connections, noting the position of the connections to assist identification when assembling.
2. Detach the rubber hose from either side of the solenoid.
3. Unscrew the two 'cheese-headed' mounting screws and withdraw the solenoid.

Weakening system cut-off solenoid - To fit

Fit the cut-off solenoid by reversing the procedure given for removal.

Weakening system cut-off solenoid circuit wiring - To check

1. Connect a test lamp across the two 'Lucar' connections to the solenoid. **Do not disconnect the two connections.**
2. Ensure the engine is cold.
3. Switch on the ignition and start the engine noting that the bulb of the test lamp is illuminated.
4. Run the engine, noting that as the engine warms-up the inlet air temperature reaches approximately 14°C. (57°F.) the test lamp bulb should extinguish.
5. Stop the engine and allow to cool, noting that when the engine becomes cold the air in the intake drops to a temperature of approximately 12° C. (54° F.) the test lamp bulb again illuminates.

Weakening system cut-off solenoid - To check

1. Detach the carburetter vacuum signal to weakening system cut-off solenoid hose at the solenoid and blank off the hose.
Connect a suitable length of hose to the solenoid connection.
2. Clean the open end of the additional hose.
3. Switch on the ignition.
4. Place the hose in the mouth and apply pressure.
5. If the operation of the solenoid is correct note that the following conditions apply.
a. With a cold engine i.e. the inlet air temperature below approximately 14°C. (57°F.) blowing air through the hose **should not** be possible.
b. As the engine warms-up i.e. an inlet air temperature of approximately 14°C. (57°F.) or above blowing air through the hose **should** be possible.
c. As the engine again cools i.e. the inlet air temperature drops below approximately 12°C. (54°F.) the conditions described in (a) should again apply.

Full throttle E.G.R. cut-off micro-switch

The full throttle E.G.R. cut-off micro-switch is mounted on a bracket which is attached to the forward side of 'A' bank carburetter. The micro-switch is operated by a plunger fitted to the throttle linkage (see Fig. U43).

Full throttle E.G.R. cut-off micro-switch - To remove

1. Detach the two 'Lucar' connections adjacent to the micro-switch.
2. Unscrew the two retaining setscrews and withdraw the micro-switch.

Full throttle E.G.R. cut-off micro-switch - To fit

Fit the full throttle E.G.R. cut-off micro-switch by reversing the procedure given for removal noting the following point.
1. After fitting the micro-switch ensure that it is correctly set.

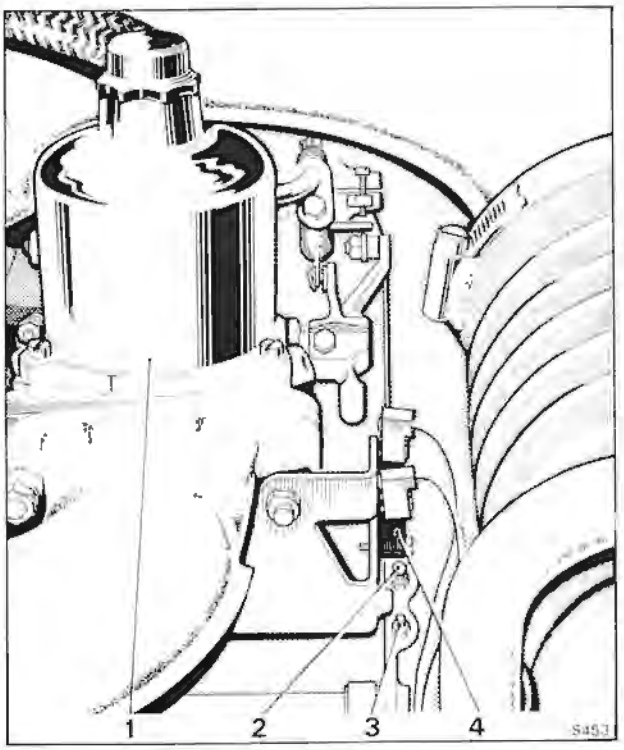

Fig. U42 Full throttle E.G.R. cut-out micro-switch
1 'A' bank carburetter
2 Micro-switch operating plunger
3 Full throttle stop
4 Cut-out micro-switch

Printed in England
© Rolls-Royce Motors Limited 1977

Full throttle E.G.R. cut-off micro-switch circuit wiring - To check

1. Disconnect the 9 White and 14 White/Green cables at the E.G.R. system cut-off solenoid 'Lucar' connections.
2. Connect a test lamp across the two disconnected cables (in place of the solenoid).
3. Detach the two 'Lucar' connections from the full throttle E.G.R. cut-off micro-switch and connect a suitable switch across the cable connection (in place of the micro-switch).
4. Ensure that the engine is cold.
5. Switch on the ignition and note that the test lamp bulb is illuminated.
6. Start and run the engine, as the engine coolant temperature exceeds approximately 14°C. (57°F.) the test lamp bulb should extinguish.
7. Switch on (make the contacts) the switch that has replaced the micro-switch, noting that the test lamp bulb illuminates.

Full throttle E.G.R. cut-off micro-switch - To set

1. It is important to ensure that the engine throttle linkage (refer to Section U5 and Chapter T) and the kick-down micro-switch (refer to Chapter T) are correctly set.
2. Depress the accelerator pedal until it just touches the toeboard mounted kick-down switch (further depression of the pedal requires increased effort).

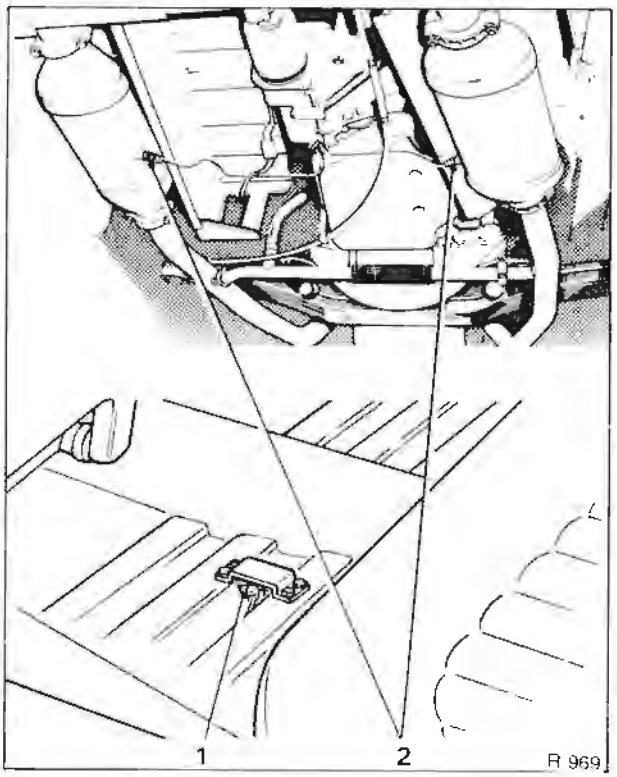

Fig. U43 Exhaust overheat sensors
1 Overheat sensor - floor area
2 Overheat sensors - catalytic converters

3. Hold the accelerator in this position.
4. Release the lock nut and screw the spring loaded operating button (see Fig. U42) away from the E.G.R. full throttle cut-out micro-switch.
5. Screw the spring loaded operating button towards the micro-switch until the micro-switch is heard to 'click'. Secure the lock-nut.
6. Depress the accelerator to operate the toeboard kick-down micro-switch and then set the full throttle stop (see Fig. U42) to prevent overloading of the micro-switch.
7. The full throttle stop should be set so that the throttle movement is stopped just before the full spring travel of the micro-switch spring loaded operating button is reached.

Full throttle E.G.R. cut-off micro-switch - To check

To check the full throttle E.G.R. cut-off micro-switch carry out the instructions given in E.G.R. system cut-off solenoid circuit wiring - To check, noting in particular Operation 6.

Catalytic converter and body floor overheat warning system

To satisfy Japanese regulations a warning system is fitted to both the exhaust catalytic converters and car body floor to alert the driver if temperatures in these two areas become excessive.

The sensors are shown in Figure U43.

Both warning systems utilise the same feed of the catalyst control unit (mounted under the front left-hand wing above the under wing sheet) and warning lamp situated on the facia.

If the temperature of either the catalytic converters or the car floor become excessive the warning lamp will illuminate.

Overheat warning lamp

To check that the warning lamp bulb is operating satisfactorily, ensure that the red coloured warning lamp situated between the four in one instrument gauge and speedometer, directly below the main beam warning lamp, illuminates just prior to the engine starting but is extinguished immediately the engine starts.

Overheat warning

Should an exhaust overheat condition be signalled the speed of the vehicle must be reduced to 50 k.p.h. (30 m.p.h.) immediately and this speed must not be exceeded until the cause of the overheat warning has been investigated and corrected.

Before carrying out a full diagnostic inspection ensure that the vehicle did not run out of fuel.

If the overheat warning lamp illuminates for reasons other than the above, a fault has occurred in:

a. The various systems that lead into the exhaust (i.e. fuel system, air injection system, etc.) or in the exhaust itself particularly the catalytic converter. Any faults in these areas can be determined as **system faults.**

b. The overheat warning circuit (i.e. faulty converter thermocouple (sensor), wiring, connections, etc.) causing the lamp to illuminate although the system is operating satisfactorily. These faults can be determined as **circuit faults.**

Further conditions may apply when investigating possible faults with the overheat warning system, as follows:
a. The car has been returned with the warning lamp illuminated.
b. The car has been returned for investigation when the warning lamp has been illuminated, but is **not illuminated at the time of** the investigation.

Warning lamp illuminated
1. Ensure that the normal safety precautions (i.e. parking brake is firmly applied, etc.) are carried out and the ignition is switched on.
2. Carefully observe if the vehicle appears **exceptionally hot** particularly in the area of the catalytic converters. If hotter than is usual for a car fitted with catalysts suspect a **system fault.**
3. Raise the car bonnet, locate the Lucar connections for the catalyst converter thermocouples (sensors) and disconnect each brown cable in turn. The connections are situated adjacent to the front left-hand road spring pot cover and the valance. The brown and blue cables, together with the control box loom enter the engine compartment from under the front wing (see Fig. U45).

4a. If the warning lamp extinguishes a **system fault** can be suspected, proceed to Operation 5.
b. If the warning lamp continues to be illuminated a **circuit fault** can be suspected, proceed to Operation 5.
After Operation 4 connect the brown cables to their respective connections.
5. Open the left-hand rear door and carefully pull the carpet and felt from the floor to determine if the metal floor in the area of the sensor is hot (see Fig. U43).
Note
The floor temperature in this area could be extremely high and therefore, care must be taken when carrying out this test to avoid personal injury.
6a. If the car floor is very hot a **system fault** could be causing excessively high temperatures in the exhaust.
b. If the car floor is cool or warm proceed to Operation 7.
7. Remove the metal cover fitted over the car floor sensor and disconnect one of the Lucar connections to the sensor. If the warning lamp extinguishes the sensor should be tested (see Service Checks car floor temperature sensor) and if found suspect in anyway, renewed.
8. If the warning lamp continues to be illuminated refit all components.
9. Position the car on a ramp and carry out Operation 1.

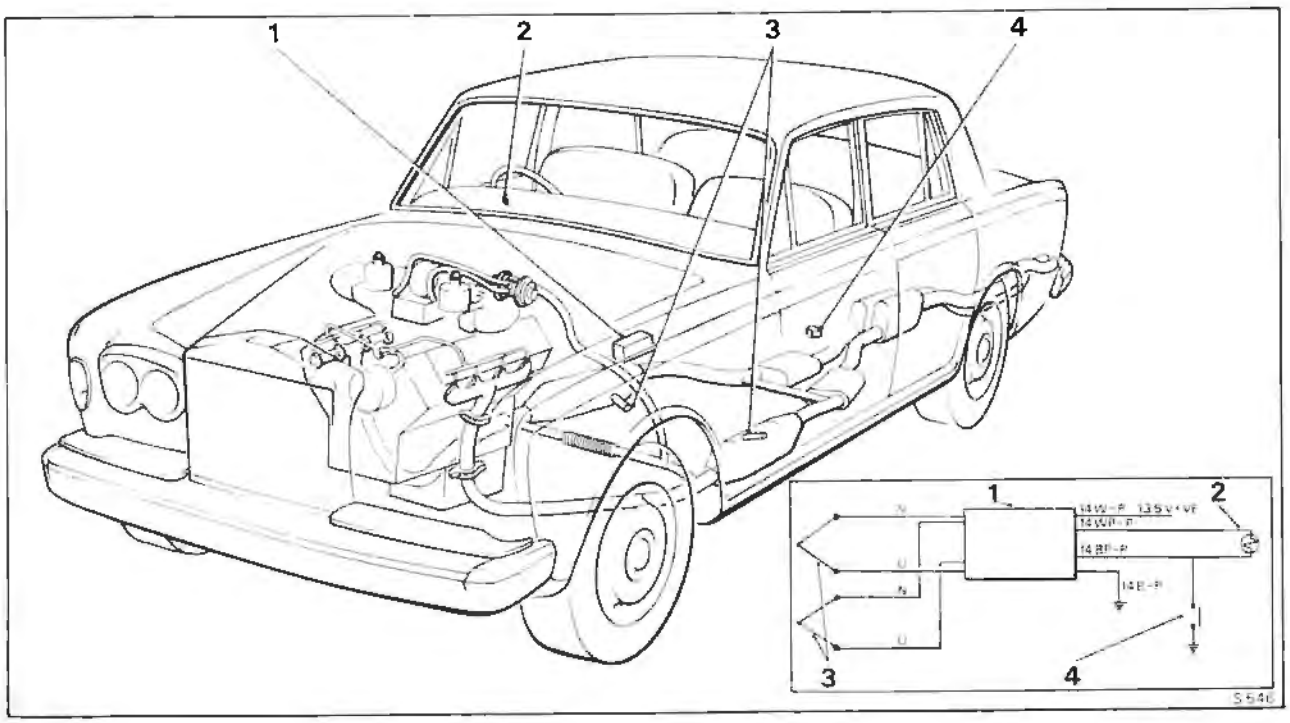

Fig. U44 Overheat warning system
1 Control unit
2 Warning lamp
3 Catalyst thermocouple probe
4 Car floor temperature sensor

Printed in England
© Rolls-Royce Motors Limited 1977
January 1977
T.S.D. 4200 (Japan)

10. From beneath the car, carefully observe the area around the catalyst converter assemblies. The catalytic converters and surrounding area will normally be very hot, however, excessive temperature caused by a **system fault** will result in the overheat warning lamp illuminating.
11. Switch off the ignition and allow the car to cool down. When the car is cold switch on the ignition and check the warning lamp as follows.
a. If the warning lamp is still illuminated suspect a **warning circuit** fault and check out the circuits as detailed in the service checks.
b. If the warning lamp is not illuminated suspect a fault in one of the systems feeding into the exhaust (**system fault**).

From the evidence gained by carrying out Operations 1 to 11 inclusive it can be determined if the vehicle has a **system fault** or a **warning circuit fault** and the information listed in the appropriate section should be consulted.

Warning lamp not illuminated at the time of investigation
1. Ensure that the normal safety precautions (i.e. handbrake or parking brake is firmly applied, etc.) are carried out and the ignition is switched on.
2. Raise the car bonnet and carry out service checks on the **catalytic converter thermocouple** and **control box.**
3. Carry out the service checks on the **floor overheat warning system** wiring and switch.

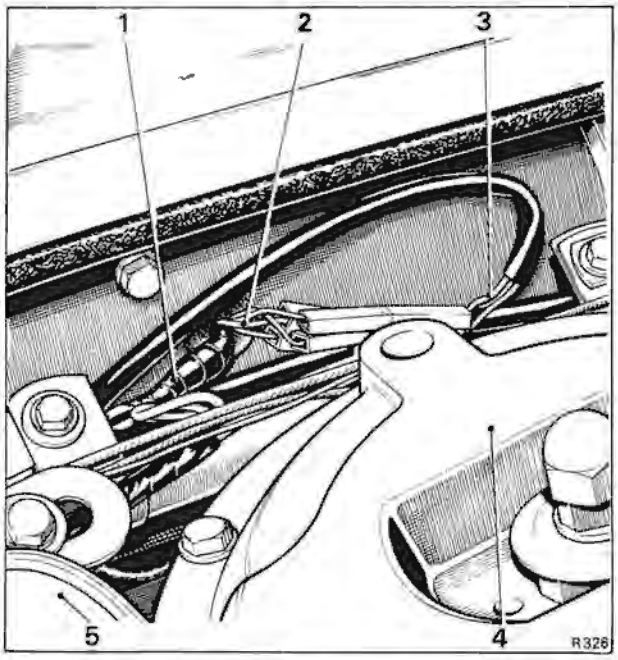

Fig. U45 Catalytic converter thermocouple probe cables and control box loom
1 Control box loom
2 Catalyst thermocouple cables (blue)
3 Catalyst thermocouple cables (brown)
4 Left-hand front road spring cover
5 Hydraulic systems reservoirs

4. If all the service checks on the warning circuits prove satisfactory a **system fault** should be suspected.

From the evidence gained by carrying out Operations 1 to 4 inclusive it can be determined if the vehicle has a **system fault** or a **warning circuit fault** and the information listed in the appropriate section should be consulted.

System faults
The following is a list of components and systems that may contribute to a malfunction in the exhaust resulting in overheating of the catalytic converter or the car floor.

Note
Any condition resulting in an engine misfire or uneven running should always be investigated first as this condition could result in the catalytic converter overheating.

1. Faulty air injection system.
2. Faulty air pressure relief valve.
3. Ignition system faulty (including ignition timing).
4. Fouled sparking plugs.
5. Incorrect float chamber depression.
6. Incorrect purge flow rate.
7. Blocked fuel feed line.
8. Fouled float chamber filters.
9. Choke system operation incorrect (including choke hold solenoid).
10. Sticking carburetter piston.
11. Fouled carburetter float chamber or jet.
12. Exhaust gas recirculation valves failed.
13. Air leak into induction system.
14. Failed exhaust gas recirculation cut-in solenoid, cut-in switch or electrical supply circuit.
15. Failed anti 'run-on' solenoid or electrical supply circuit.
16. Faulty hot idle mixture compensator.
17. Weakening device filter blocked or blockage in rubber connecting hoses.
18. Flooding of carburetter float chamber or jet.
19. Incorrect operation of temperature controlled air intake system.

Note
Should the overheat warning lamp illuminate while testing is in progress, disconnect and blank off the air injection system check valves. This action should prevent overheating of the catalyst whilst the remaining tests are completed.

Warning circuit faults
The following is a list of components within the overheat warning system that may contribute to a malfunction of the warning system.

A theoretical wiring diagram of the warning circuits is illustrated in Figure U44.
1. Catalyst overheat warning control box and wiring.
2. Warning lamp.
3. Catalyst thermocouple probes and wiring.

4. Car floor temperature sensor and wiring.
These components together with the necessary wiring and connections can be checked by carrying out the relevant service checks.

Service checks

Catalyst overheat warning control box and lamp - To check

1. Raise the car bonnet, locate the control box loom and the catalyst thermocouple cables on the left-hand valance adjacent to the front road spring pot cover (see Fig. U45).
2. Identify the two sets of catalyst thermocouple cables, each set has one brown and one blue cable.
3. In turn, disconnect each blue cable at its Lucar connection and connect the end from the control box through a 9 k resistor to Positive (this can be the white wire in the control box loom).
4. Switch on the ignition, if the control and wiring is correct the warning lamp will illuminate.
5. Remake the electrical connections.

Catalyst thermocouple probe - To check

1. Raise the car bonnet, locate the control box loom and the catalyst thermocouple cables on the left-hand valance adjacent to the front road spring pot cover (see Fig. U45).
2. Identify the two sets of catalyst thermocouple cables, each set has one brown and one blue cable.
3. In turn, disconnect each set of cables at their Lucar connections and using suitable equipment (e.g. an Avometer) ensure that the thermocouple probe is not open circuit.
4. Providing the thermocouple probes are not open circuit they are considered serviceable, however, should it be suspect for other reasons a new unit must be fitted.
5. Remake the electrical connections.

Car floor temperature sensor - To check

1. Open the rear left-hand door and pull the carpet and felt from the floor of the car (see Fig. U43).
2. Remove the four screws and withdraw the cover from above the sensor.
3. Detach the two cables from the sensor and using an additional short length of cable, connect the two together. If the warning lamp illuminates, the wiring and warning lamp are satisfactory.
4. Remove the sensor from the car.
5. Using suitable test facilities (e.g. heated oil bath, oven, etc.) ensure that the sensor will operate at 110°C. ± 5°C. (230 F.°±10°F.).
Should the switch operate within the prescribed limits it is satisfactory.
6. Fit the switch and the other components to the car.

Catalyst thermocouple probe - To remove and fit

1. Unclip the thermocouple lead from the side of the catalyst.
2. Unscrew the 7/16in. A/F cap nut and withdraw the thermocouple probe from the catalyst.
3. Disconnect the 'Lucar' connections adjacent to the transmission.
4. Release the lock nuts and free the thermocouple from its mounting at the rear end of the transmission.
5. Fit the thermocouple probe in the reverse order.

Car floor temperature sensor - To remove and fit

Refer to Car floor temperature sensor - To check. temperature sensor - To check.

Catalyst overheat warning control box - To remove

1. Ensure that the normal safety precautions (i.e. handbrake or parking brake is firmly applied, etc.) are carried out. Firmly chock the wheels.
2. Raise the front of the car on a jack and position stands beneath the car.
3. Remove the front left-hand road wheel.
4. Remove the underwing sheet.
5. Raise the car bonnet, locate the control box loom and catalyst thermocouple cables on the left-hand valance adjacent to the front road spring pot cover (see Fig. U45).
6. Disconnect the cables mentioned at their Lucar connectors and carefully feed them through the valance.
7. Remove the mounting setscrews and withdraw the control box from beneath the wing.

Catalyst overheat warning control box - To fit

1. Fit the control box by reversing the procedure given for removal, ensuring that the rubber grommet is correctly fitted to the hole in the wing valance and the cables are correctly connected in the engine compartment.

Overheat warning lamp - To remove and fit

The warning lamp is situated between the four in one instrument and the speedometer, directly below the main beam warning lamp on the facia.

1. To gain access to the lamp it will be necessary to remove the facia (see Chapter S).

Printed in England

© Rolls-Royce Motors Limited 1977

January 1977

T.S.D. 4200 (Japan)

Section U8

Fault diagnosis

Symptoms	Possible Cause
1. Engine will not start. (Starter motor operating).	1. (a) Ignition circuit broken. (b) Failed anti 'run-on' solenoid or failure of electrical supply circuit. (c) Ignition system faulty. (d) Damaged or contaminated ignition high tension circuit. (e) Blocked fuel feed line, fouled float chamber filters or fouled fuel recirculation restrictor. (f) Faulty choke bi-metal coil. (g) Choke solenoid inoperative. (h) Faulty choke 'fast-idle' mechanism. (i) Air leak into induction system. (j) Faulty hot idle mixture compensator. (k) Weakening device filter blocked, weakening device air intake non-return valve failed or blockage in rubber connecting hoses. (l) Faulty weakening device cut-off solenoid or failure of electrical supply circuit. (m) Faulty weakening device control switch or failure of electrical supply circuit. (n) Dislodged venturi in weakening device. (o) Flooding of carburetter float chamber or jet. (p) Exhaust gas recirculation valve(s) failed.
2. Engine idles very roughly.	2. (a) Ignition system faulty. (b) Fouled sparking plugs. (c) Damaged or contaminated ignition high tension circuit. (d) Fouled fuel recirculation restrictor. (e) Air leak into induction system. (f) Faulty hot idle compensator. (g) Weakening device filter blocked, weakening device air intake non-return valve failed or blockage in rubber connecting hoses. (h) Badly worn or damaged carburetter control linkage. (i) Flooding of carburetter float chamber or jet. (j) Sticking carburetter piston. (k) Incorrect operation of carburetter jet compensation. (l) Fouled carburetter float chamber or jet. (m) Exhaust gas recirculation valve(s) failed. (n) Incorrect operation of temperature controlled air intake system.
3. Engine stalls.	3. (a) Ignition circuit broken. (b) Failed anti 'run-on' solenoid or failure of electrical supply circuit. (c) Ignition system faulty. (d) Damaged or contaminated ignition high tension circuit.

Printed in England

© Rolls-Royce Motors Limited 1977

January 1977

T.S.D. 4200 (Japan)

Symptoms	Possible Cause
3. Engine stalls (continued)	(e) Blocked fuel feed line, fouled float chamber filters or fouled fuel recirculation restrictor. (f) Air leak into induction system. (g) Faulty hot idle mixture compensator. (h) Weakening device filter blocked, weakening device air intake non-return valve failed or blockage in rubber connecting hoses. (i) Badly worn or damaged carburetter control linkage. (j) Flooding of carburetter float chamber or jet. (k) Sticking carburetter piston. (l) Incorrect operation of carburetter jet compensation. (m) Fouled carburetter float chamber or jet. (n) Exhaust gas recirculation valve(s) failed.
4. (i) Engine shows signs of power loss evident at high speeds and loading. (ii) Engine misfires particularly on hard acceleration from low speed.	4. (a) Ignition system faulty. (b) Fouled sparking plugs. (c) Damaged or contaminated ignition high tension circuit. (d) Blocked fuel feed line or fouled float chamber filters. (e) Choke system operation incorrect. (f) Sticking carburetter piston. (g) Fouled carburetter float chamber or jet. (h) Faulty exhaust gas recirculation full throttle cut-out switch or failure of electrical supply circuit. (i) Exhaust gas recirculation valve(s) failed. (j) Failed exhaust gas recirculation valve(s) cut-out solenoid or electrical supply circuit.
5. Engine hesitates or misfires under light load.	5. (a) Failed anti 'run-on' solenoid or failure of electrical supply circuit. (b) Ignition system faulty. (c) Fouled sparking plugs. (d) Damaged or contaminated ignition high tension circuit. (e) Blocked fuel feed line or fouled float chamber filters. (f) Air leak into induction system. (g) Faulty hot idle mixture compensator. (h) Weakening device filter blocked, weakening device air intake non-return valve failed or blockage in rubber connecting hoses. (i) Dislodged venturi in weakening device. (j) Flooding of carburetter float chamber or jet. (k) Incorrect operation of carburetter jet compensation. (l) Fouled carburetter float chamber or jet. (m) Exhaust gas recirculation valve(s) failed. (n) Incorrect operation of temperature controlled air intake system.
6. Increase in fuel consumption.	6. (a) Ignition system faulty. (b) Fouled fuel recirculation restrictor. (c) Faulty choke bi-metal coil. (d) Choke system operation incorrect. (e) Air leak into induction system. (f) Faulty hot idle mixture compensator.

Symptoms	Possible Cause
6. Increase in fuel consumption (continued)	(g) Weakening device filter blocked, weakening device air intake non-return valve failed or blockage in rubber connecting hoses. (h) Faulty weakening device cut-off solenoid or failure of electrical supply circuit. (i) Faulty weakening device control switch or failure of electrical supply circuit. (j) Air leak in mixture weakening system. (k) Flooding of carburetter float chamber or jet. (l) Sticking carburetter piston. (m) Incorrect operation of carburetter jet compensation. (n) Incorrect purge flow rate. (o) Exhaust gas recirculation valve(s) failed.
7. Decrease in fuel consumption.	7. (a) Air leak in mixture weakening system. (b) Incorrect operation of carburetter jet compensation. (c) Incorrect purge flow rate. (d) Faulty exhaust gas recirculation temperature control switch or failure of electrical supply circuit. (e) Exhaust gas recirculation valve(s) failed.
8. Engine 'backfires' on overrun.	8. (a) Ignition system faulty. (b) Air leak into induction system. (c) Faulty hot idle mixture compensator. (d) Exhaust gas recirculation valve(s) failed.
9. Sudden increase in engine idle speed.	9. (a) Faulty choke 'fast-idle' mechanism. (b) Failed carburetter overrun valve.
10. Excessive noise from air injection pump or system.	10. (a) Faulty or damaged air injection pump, relief or check valves, connecting hoses or pipes.

Printed in England
© Rolls-Royce Motors Limited 1977
January 1977
T.S.D. 4200
(Japan)

Section U9

Workshop tools

Tool Number	Description
RH 8090	Pliers - wire hose clips
RH 8841	Dial gauge - carburetter piston lift
RH 8880	Setting jig - throttle levers
RH 8945	Connector - choke stove pipe
RH 9086	Fitting tool - carburetter piston ball race clip
RH 9096	Fitting tool - 'A' bank mixture adjusting screw tamperproof seal
RH 9097	Fitting tool - 'B' bank mixture adjusting screw tamperproof seal
RH 9105	Kit - to adapt RH 8841 to fit S.U. HIF 7 carburetters

Printed in England
© Rolls-Royce Motors Limited 1977
January 1977
T.S.D. 4200

Section U10

Running changes

Printed in England

© Rolls-Royce Motors Limited 1977

January 1977

T.S.D. 4200
(Japan)

Workshop Manual

Rolls-Royce Silver Shadow II
Rolls-Royce Silver Wraith II
Rolls-Royce Corniche
Rolls-Royce Camargue
Bentley T2
Bentley Corniche

From car serial number 30001

Volume 4

Printed in England

© Rolls-Royce Motors Limited 1979

August 1979

S 168

TSD 4200

Printed and Published by

Rolls-Royce Motors Limited
Crewe CW1 3PL
Cheshire
England

The information given in this document is based upon the latest knowledge available to Rolls-Royce Motors Limited. However, in view of the Company's continuous programme of product improvement and development, the information may have become out of date by the time you read this publication and reference should be made to the Company's service bulletins.

© Rolls-Royce Motors Limited 1977

T 172

Chapter U

Emission control systems

Applicable to 1978 model year cars destined for Japan

Section

U1 Introduction
U2 Exhaust emission control system
U3 Fuel evaporative emission control system
U4 Crankcase emission control system
U5 Carburetters and Automatic choke system
U6 Ignition system
U7 Electrical components
U8 Fault diagnosis
U9 Workshop tools
U10 Running changes

Printed in England

© Rolls-Royce Motors Limited 1978

January 1978

T.S.D. 4200
(Japan)

Chapter U - 1978 Japan

Issue record sheet 1

November 1979

The dates quoted below refer to the issue date of individual pages within this chapter.

Section	U1	U2	U3	U4	U5	U6	U7	U8	U9	U10
Page No.										
1	Jan 78	Jan 78	Jan 78	Jan 78	Jan 78	Nov 79	Jan 78	Jan 78	Jan 78	Jan 78
2	Jan 78	Jan 78	Jan 78		Jan 78	Nov 79	Jan 78	Jan 78		
3	Jan 78	Jan 78	Jan 78		Jan 78		Jan 78	Jan 78		
4	Jan 78	Jan 78	Jan 78		Jan 78		Jan 78			
5		Nov 79	Jan 78		Jan 78		Jan 78			
6		Nov 79	Jan 78		Jan 78		Jan 78			
7		Jan 78	Jan 78		Jan 78		Jan 78			
8		Jan 78	Jan 78		Jan 78					
9			Jan 78		Jan 78					
10			Jan 78		Jan 78					
11					Jan 78					
12					Jan 78					
13					Jan 78					
14										
15										
16										
17										
18										
19										
20										
21										
22										
23										
24										
25										
26										
27										
28										
29										
30										
31										
32										
33										
34										
35										
36										
37										
38										
39										
40										
41										
42										
43										
44										
45										
46										
47										
48										

Printed in England
© Rolls-Royce Motors Limited 1979

Printed in England
© Rolls-Royce Motors Limited 1978

Section U1

Introduction

This Chapter has been written specifically for cars fitted with Emission Control Systems conforming to the Japanese emission control regulations, applicable to 1978 model year new motor vehicles.

It is important therefore that Service Personnel fully understand the contents of this Chapter so that the special servicing can be correctly carried out.

Rolls-Royce and Bentley motor cars conforming to the above regulations and produced to the 1978 model year specification can be readily identified as follows.

1. A 1978 date of manufacture plate located on the bulkhead.

Engine compartment

Figures U2 and U3 overleaf show the location of the major emission control system components within the engine compartment.

Hose routing diagram

Figure U4 within the Introduction section gives details of the various hose 'runs' and connections in and around the engine compartment, that are associated with the emission control systems components.

Torque tightening

When fitting the various emission control systems components, ensure that the securing nuts and set-screws are tightened to the torque figures given in Chapter P, unless otherwise stated in this Chapter.

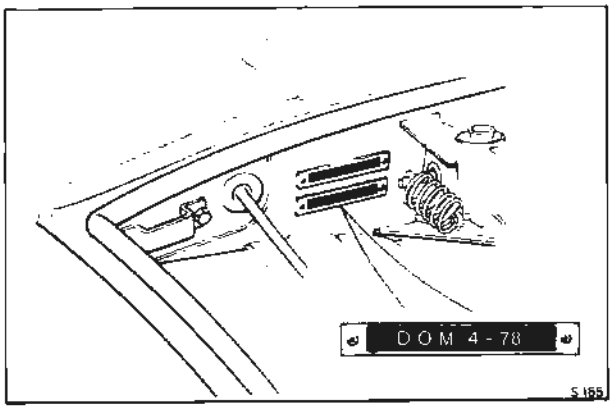

Fig. U1 Date of manufacture plate

January 1978
T.S.D. 4200
(Japan)

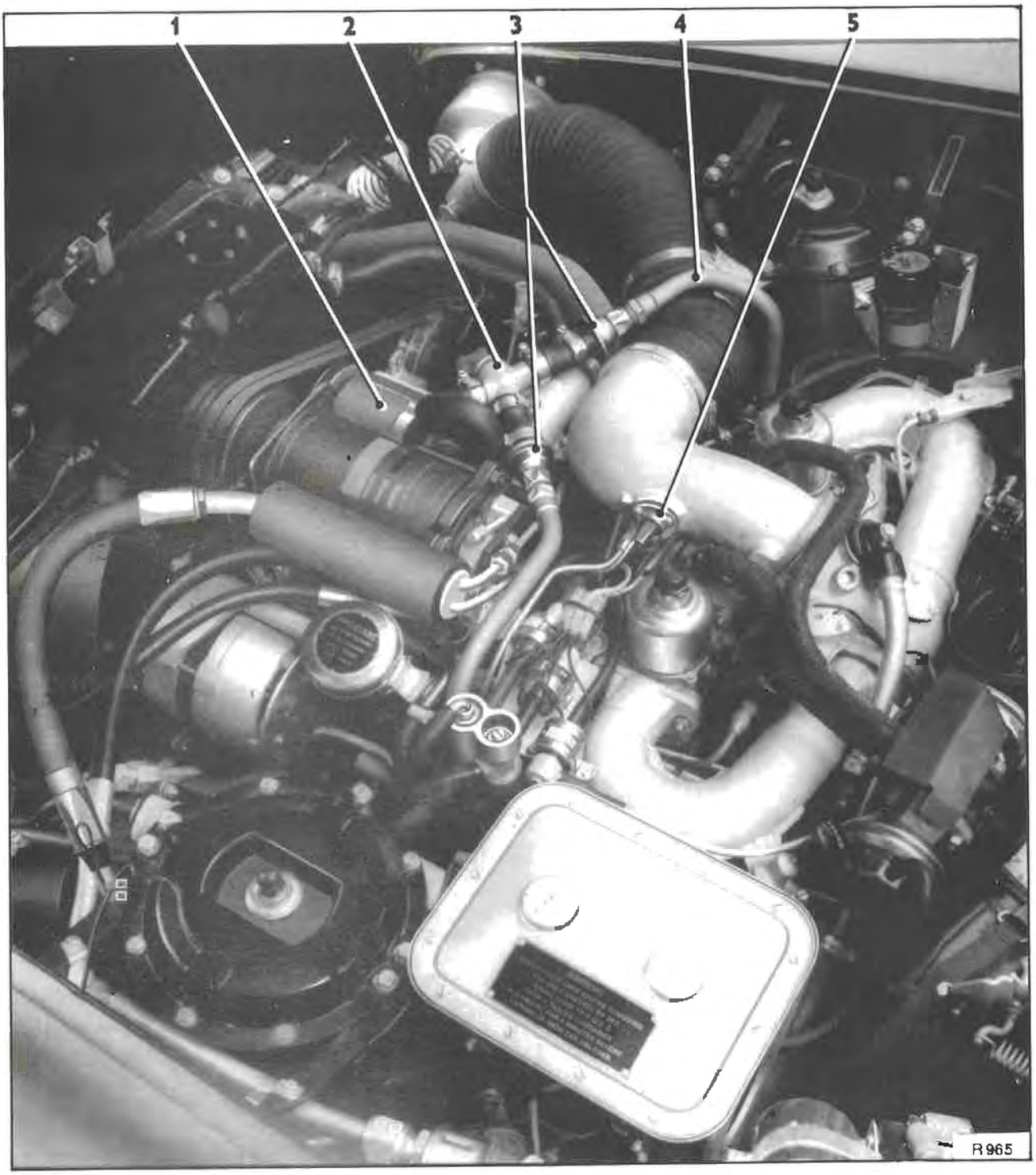

Fig. U2 Engine compartment details (L.H. side)

1 Air pump
2 Connection block and relief valve
3 Check valves
4 'A' bank air manifold
5 Weakening device and E.G.R. cut-out switch

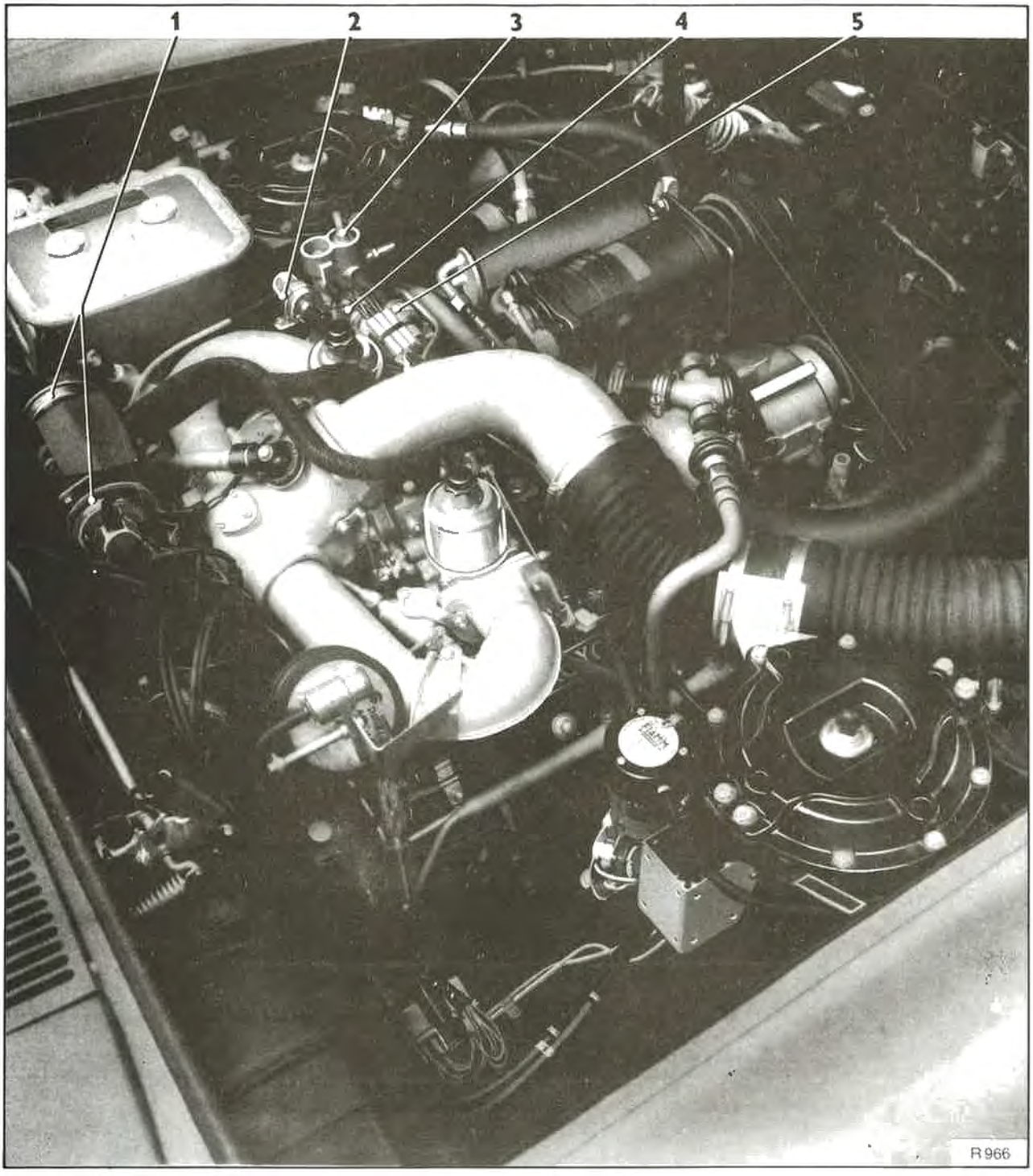

Fig. U3 Engine compartment details (R.H. side)

1 Exhaust gas recirculation valves
2 Exhaust gas recirculation cut-off solenoid
3 Weakening device assembly
4 Weakening device cut-off solenoid
5 Anti 'run-on' solenoid

Printed in England
© Rolls-Royce Motors Limited 1978

January 1978
T.S.D. 4200 (Japan)

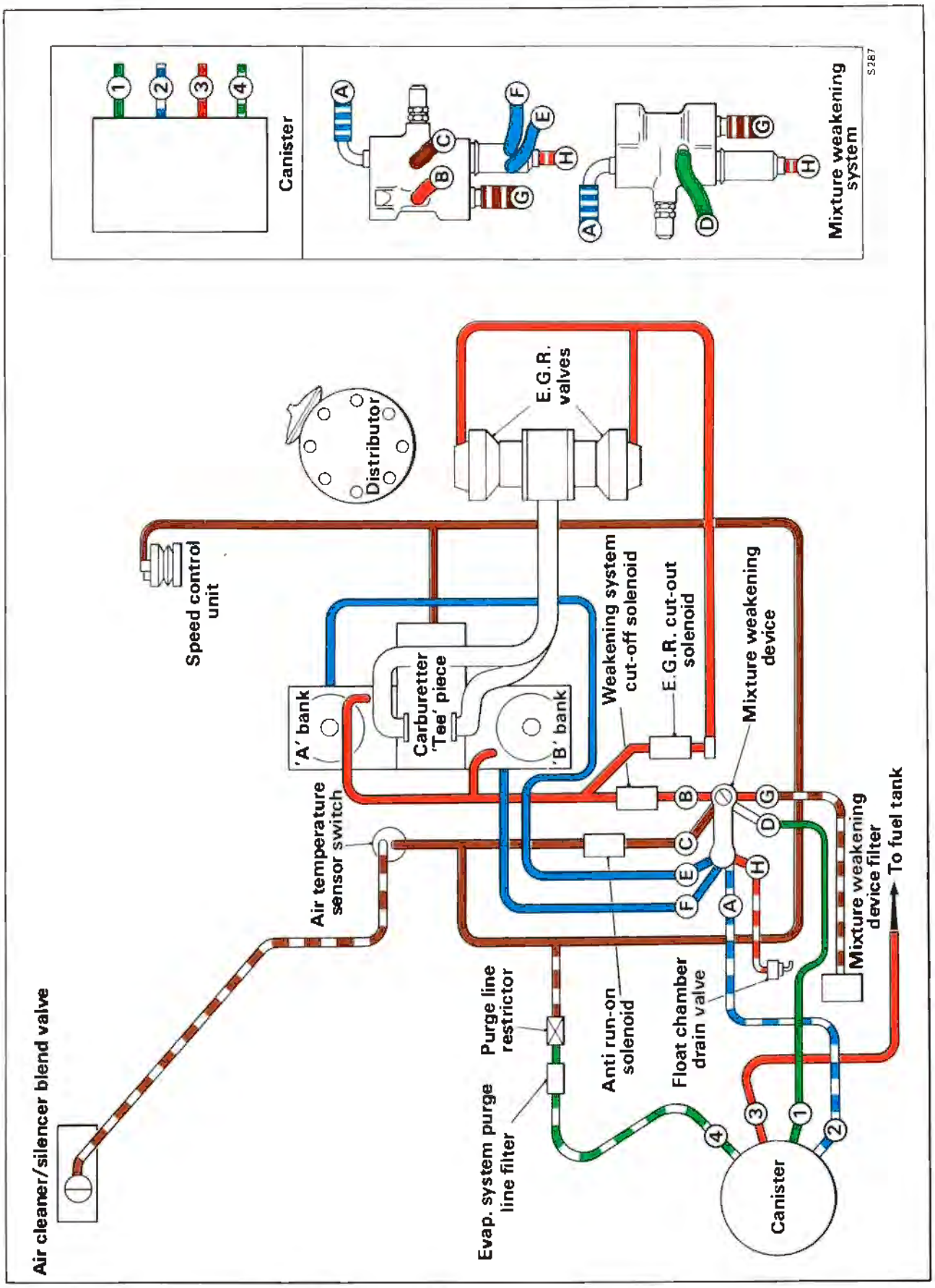

Fig. U4 Hose routing diagram - 1978 model year cars

Printed in England
© Rolls-Royce Motors Limited 1975
January 1978
T.S.D. 4200
(Japan)

Section U2

Exhaust emission control system

The Exhaust Emission Control System is designed to reduce the carbon monoxide, unburnt hydrocarbon and oxides of nitrogen content in the exhaust gases.

The system does not eliminate the danger caused by inhaling exhaust gases in a confined area.

Air from the atmosphere is drawn into the engine driven air injection pump through a centrifugal filter. From the pump, a quantity of air proportional to engine speed passes via a three-way connection block (containing a relief valve), through check valves to the air manifolds and then into the exhaust ports. This air combines with the exhaust gases discharged from the combustion chambers and promotes the oxidation process in the exhaust system and catalytic converters. The gases then pass through the exhaust system to atmosphere.

In addition, a proportion of the exhaust gas from the exhaust balance pipe situated between the two downtake pipes, is recirculated through vacuum operated metering valves into the carburetter 'tee' piece, just downstream of the throttle plates. The recirculated exhaust gas mixes with the inlet charge of fuel/air mixture in the induction manifold and is distributed to the cylinders, lowering the peak combustion temperature and reducing oxides of nitrogen emissions.

Before commencing work on the exhaust emission control system, care should be taken to ensure that the relevant components are not hot.

The system is illustrated in Figure U5 and comprises the following main components.

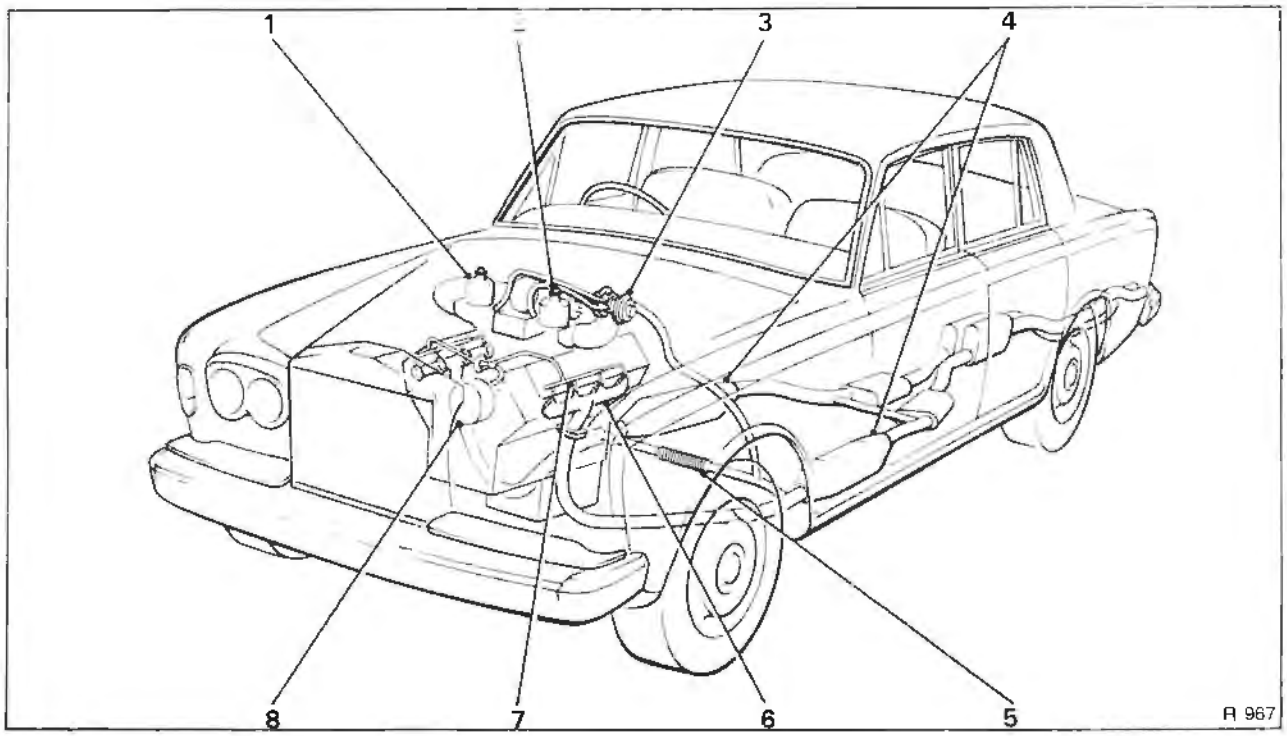

Fig. U5 Exhaust emission control system

1 'A' bank carburetter
2 'B' bank carburetter
3 Exhaust gas recirculation valves
4 Catalytic converters
5 Exhaust system balance pipe
6 'B' bank exhaust manifold
7 'B' bank air manifold
8 Air pump

Air injection system (see Fig. U6)
Air manifolds
Air pump
Check valves
Centrifugal air filter
Pressure relief valve
Three-way connection block

Exhaust gas recirculation system (E.G.R.) (see Fig. U9)
Cut-off solenoid (see Section U7)
Cut-out switch (see Section U7)
Distribution pipes
E.G.R. valves
E.G.R. valves heatshield
Feed pipe
Full throttle cut-out micro-switch (see Section U7)

Exhaust system (see Figs. U5 and U12)
Catalytic converters (For details of the Exhaust system refer to Chapter Q).

For details of the servicing and maintenance requirements of the Exhaust Emission Control System, refer to the Service Schedules Manual - T.S.D. 4117.

Air injection system (see Figs. U5 and U6)
A detailed description of the air injection system is given at the beginning of this section.

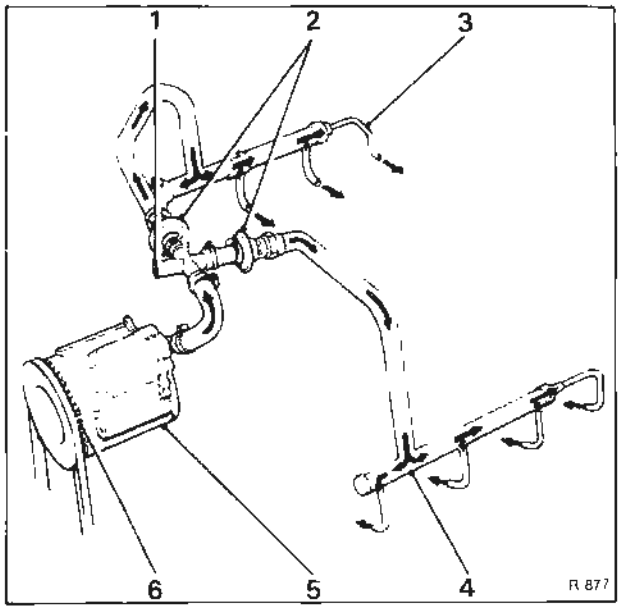

Fig. U6 Air injection system
1 Relief valve
2 Check valves
3 'A' bank air manifold
4 'B' bank air manifold
5 Air pump
6 Air pump intake

Air injection system - To test
1. Connect an electric impulse tachometer to the engine in accordance with the manufacturer's instructions.
2. Start and run the engine at a constant speed of 2 000 r.p.m., check that air does not escape from the relief valve.
3. If air does escape during Operation 2, check that the correct (blue) setting plug is fitted to the pressure relief valve.
4. If the system does not operate as described in Operation 2, stop the engine and fit a new three-way connection block assembly (containing the pressure relief valve).
5. Repeat Operation 2.
6. Stop the engine and remove the test equipment.

Air injection system - Leak check
Check the air injection system for air leaks by carrying out the following sequence of operations.
1. Ensure that the ignition is switched off.
2. Visually inspect the condition of all hoses, pipes and joints associated with the air injection system.
3. Ensure that all worm drive clips are tight.
4. Start the engine and listen carefully for any evidence of an air leak from the system.
5. If an air leak is suspected it is permissible to coat the component or hose with a soap solution; soap bubbles will confirm an air leak.

Air injection system - Fault diagnosis
To diagnose malfunctioning of the air injection system refer to Section U8 - Fault diagnosis.

Air manifolds
The air manifolds convey air from the check valves to the engine exhaust ports. One air manifold is fitted to each bank of cylinders and is identified as 'A' bank air manifold or 'B' bank air manifold.

To remove an air manifold, unscrew the check valve union and the four ¾ in. A/F adapters in the cylinder head.

The 'A' bank air manifold is reasonably straight forward to withdraw but 'B' bank air manifold will require the disconnecting of several other hoses and pipes (e.g. choke stove pipes, fuel evaporative weakening device hoses and pipes, etc.), to facilitate withdrawal.

Fit the air manifolds by reversing the procedure given for removal, noting that the check valve union has a tapered thread. All the adapters in the cylinder head should be torque tightened to the figures given in Chapter P.

Air pump
The air pump is of the rotary vane type and is belt driven from the engine coolant pump. The centrifugal air filter is an integral part of the pump and is situated between the pump body and the pump driving pulley.

Air pump - To remove (see Fig. U7)
1. Disconnect the battery (refer to Chapter M).
2. Unscrew the worm drive clip and detach the hose from the pump to the three-way connection block, at the pump. Blank off the hose and pump connections to prevent the ingress of dirt, etc.
3. Slacken the two 9/16in. A/F setscrews on the drive belt adjustment strut; remove the upper bolt.
4. Remove the drive belt from the pulley.
5. Support the air injection pump and unscrew and remove the 9/16in. A/F mounting setscrew situated on the opposite side of the pump pulley.

Air pump - To fit
Fit the air pump by reversing the procedure for removal noting the following.
1. Ensure that the driving belt is adjusted so that an applied force of 5,5 kg. (12 lbs.) mid-way between the air injection pump pulley and the coolant pump pulley causes the belt to deflect 9,5 mm. (0.375 in.).

Air pump pulley
1. To remove, unscrew and remove the three set-screws situated around the centre of the pulley. Withdraw the pulley.
2. To fit the pulley, reverse the procedure given for removal ensuring that the setscrews are torque tightened to the correct figure (see Chapter P).

Check valves
The check valves are non-return valves (one-way valves) and one is fitted into the air injection system between the air pump and the air manifolds, for each bank of cylinders.

The check valves prevent the backflow of exhaust gases into the air lines or air pump, they operate whenever the exhaust back pressure exceeds the air pump delivery pressure at high speed and/or in the case of air pump drive belt failure.

To remove a check valve, slacken the worm drive clip situated on the air pump to check valve hose. Unscrew the union from the air manifold and withdraw the check valve. Fit a check valve in the reverse order.

Pressure relief valve (see Figs. U6 and U8)
The spring loaded pressure relief valve is permanently housed within the three-way connection block, its function is to allow excess air to escape from the air injection system when the check valves are closed. The relief valve prevents damage to the pump vanes and excess exhaust temperatures under extreme operating conditions.

If it becomes necessary to remove the pressure relief valve three-way connection block, slacken the worm drive clips on the three connecting hoses and withdraw the assembly.

To test the pressure relief valve, blank off the two connections for the check valves and apply pressure to the connection from the pump, ensure that the relief valve operates within the following acceptable limits.
0,5 kg/sq.cm. to 0,6 kg/sq.cm.
(7.4 lb/sq.in. to 8.4 lb/sq.in.)

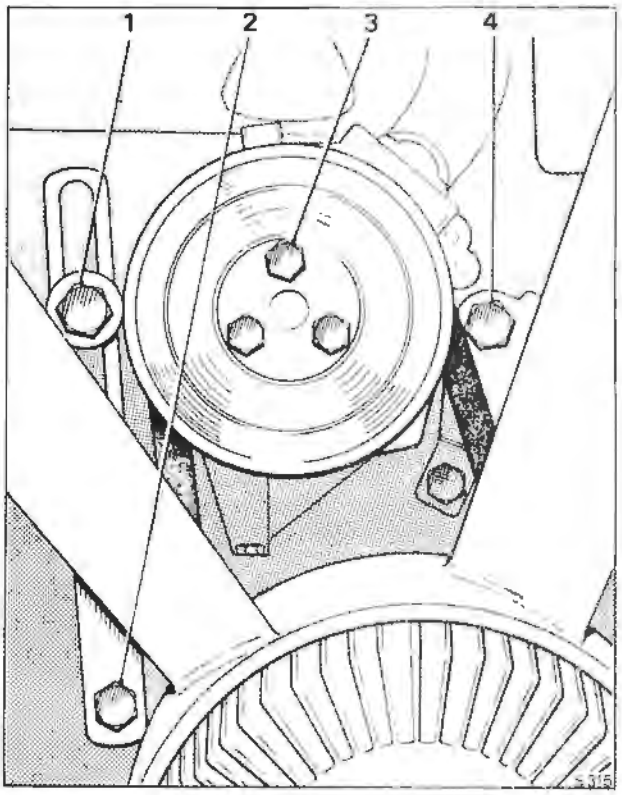

Fig. U7 Air injection pump
1 Adjustment strut upper setscrew
2 Adjustment strut pivot setscrew
3 Pulley retaining setscrews
4 Air pump mounting setscrew

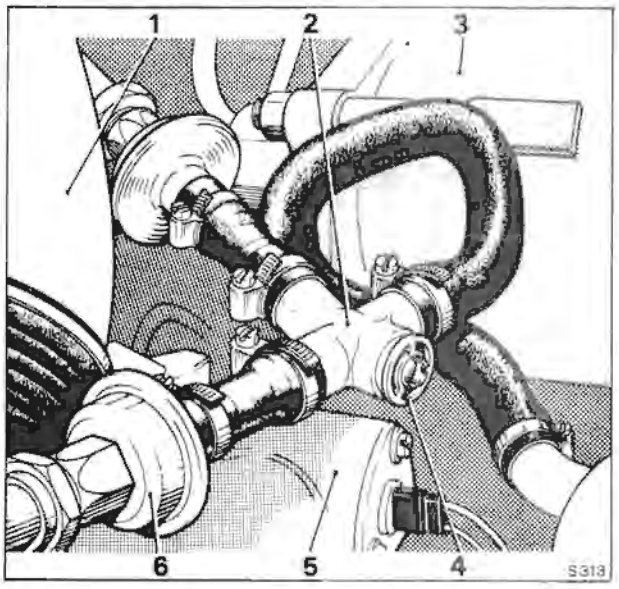

Fig. U8 Three-way connection block
1 Carburetter air intake
2 Three-way connection block
3 Refrigeration compressor
4 Air injection system pressure relief valve
5 Thermostat elbow
6 Check valve

Printed in England
© Rolls-Royce Motors Limited 1978
January 1978
T.S.D. 4200 (Japan)

Exhaust gas recirculation system (E.G.R.)
(see Figs. U5 and U9)
A detailed description of the exhaust gas recirculation system (E.G.R.) is given at the beginning of this section.

Distribution pipes
The distribution pipes convey the recirculated exhaust gas from the E.G.R. valves into the carburetter 'tee' piece.

Distribution pipes - To remove
1. Using a 7/16 in. A/F spanner unscrew and remove the two nuts and washers securing the distribution pipes to the E.G.R. valve mounting block.
2. Unscrew the 7/16 in. A/F setscrews retaining the heatshield to 'B' bank air horn; collect the washers.
3. Ease the mounting block rearward to free the joint face; discard the gasket.
4. Support the weight of the distribution pipes.
5. Unscrew and remove the four 2 B.A. setscrews and washers securing the two distribution pipe flanges to the carburetter 'tee' piece.
6. Withdraw the distribution pipes and discard the gaskets.

Distribution pipes - To fit
Fit the distribution pipes by reversing the procedure given for removal, noting the following points.
1. Ensure that all joint faces are clean and free from carbon deposits.
2. Coat the joint faces and gaskets at the carburetter 'tee' piece with 'Wellseal'.

Distribution pipes - To clean
1. Remove the distribution pipes as described in Distribution pipes - To remove.
2. With a pointed scraper clean as much carbon deposit as possible from inside the distribution pipes and the joint faces. Particular attention should be given to the carburetter end of the pipes, because the majority of the carbon deposit will be found in this area.
3. Using wire brushes complete the cleaning operation on the distribution pipes.
4. With a pointed scraper remove the carbon deposits from the carburetter 'tee' piece connection orifices.
5. Before fitting the distribution pipes thoroughly blow-out the pipes and carburetter 'tee' piece connections with compressed air.
6. Fit the distribution pipes as described in Distribution pipes - To fit.

E.G.R. valves (see Fig. U10)
A proportional flow recirculation system is used. Exhaust gas from the balance pipe between the two downtakes of the dual exhaust system passes through twin metering orifices and is recirculated into the carburetter 'tee' piece. Atmospheric pressure is maintained downstream of the metering orifices by means of the control valves so that the recirculation flow is proportional to the relative effective areas of the metering orifices and the main exhaust system.

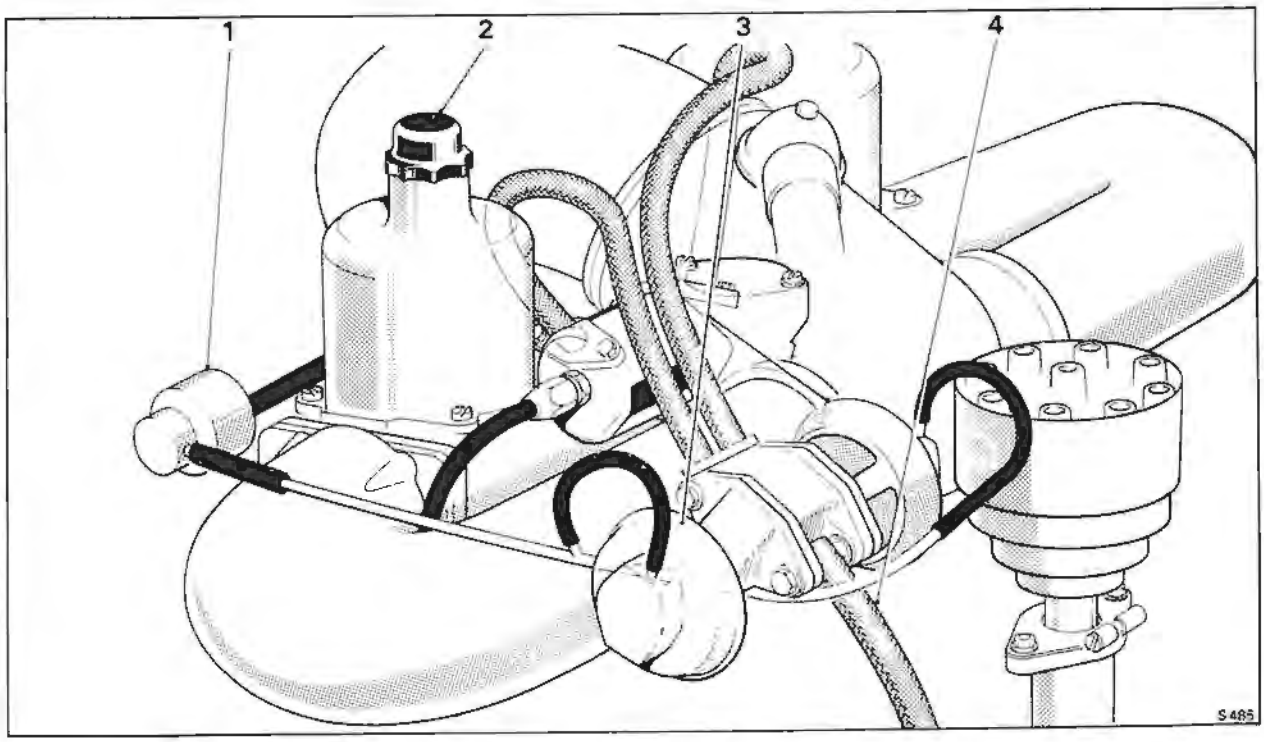

Fig. U9 Exhaust gas recirculation system
1 E.G.R. cut-off solenoid
2 'B' bank carburetter
3 E.G.R. valves
4 E.G.R. feed pipe

Dilution of the inlet charge with exhaust gas lowers the peak combustion temperature and reduces the formation of oxides of nitrogen.

Twin vacuum operated control valves each with an integral pressure transducer are used and the metering orifice of each valve is incorporated in an extension of the valve seat. A carburetter throttle gated vacuum signal is used to operate the valve. This signal is modulated by the integral transducer valve and applied to the control valve diaphragm so that the control valve lift is adjusted to maintain a constant control pressure, just above atmospheric pressure between the metering orifice and the control valve seat.

When the engine load is increased, the control pressure exceeds the transducer valve setting and the transducer valve closes applying the full vacuum signal to the control valve diaphragm and thus opening the control valve and increasing the E.G.R. flow. Similarly, as the engine load is reduced, the control pressure becomes less than the transducer valve setting and the transducer valve opens, venting the diaphragm chamber to atmosphere and causing the control valve to close and reduce the E.G.R. flow. The transducer valve constantly cycles adjusting the control valve lift to maintain a constant control pressure under all normal operation conditions.

The use of a throttle gated vacuum signal ensures complete control valve closure at idle to maintain good idle quality.

To improve starting and drive-away under low temperature conditions a solenoid valve (see Section U7) interrupts the carburetter vacuum signal to the E.G.R. valves until a predetermined air intake temperature is reached.

A micro-switch operated by the throttle lever (see Section U7) also controls this solenoid to provide E.G.R. cut-out at full throttle. At high engine speed the exhaust gas back pressure is high. As a result, the integral transducer valve directs full carburetter vacuum signal to the control valves. At high engine speed under full throttle operation the air intake restriction is sufficient to produce a carburetter vacuum signal large enough to open the control valves, this results in excessive flow under these conditions which would seriously degrade performance and reduce the safety margin for overtaking.

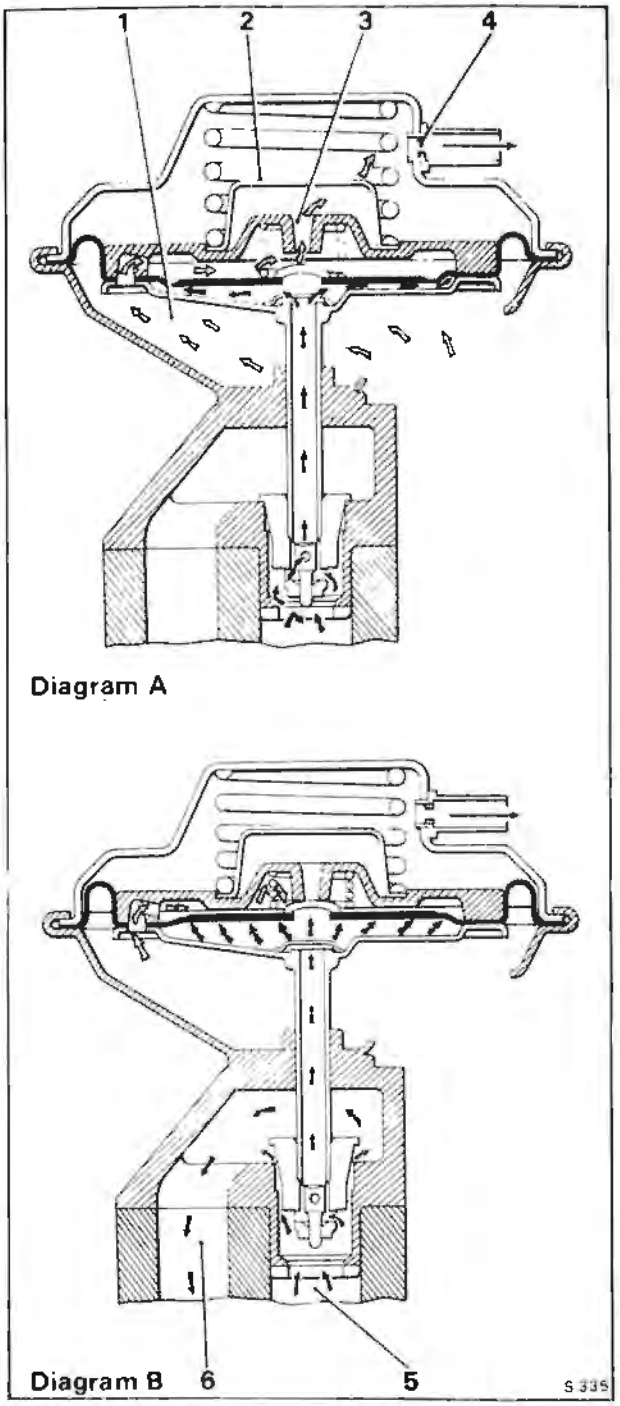

Fig. U10 Exhaust gas recirculation valve

Ambient air ⇦
Exhaust gas ⬅

Diagram A - Exhaust pressure below operating value

1 Ambient air
2 Air filter
3 Air bleed
4 Restrictor

Diagram B - Exhaust pressure above operating value

5 Exhaust gas from balance pipe
6 Exhaust gas to carburetter 'tee' piece

E.G.R. valves - To remove

1. Detach the small diameter rubber hose from the valve.
2. Unscrew and remove the two ½ in. A/F nuts retaining the valve to the mounting flange; collect the two washers.
3. Withdraw the valve and remove the gasket from the mounting flange.
4. Repeat Operations 1 to 3 inclusive on the second valve.

Printed in England
© Rolls-Royce Motors Limited 1979
November 1979
T.S.D. 4200
(Japan 1978 Model year)

E.G.R. valves - To fit
Fit the valves by reversing the procedure for removal, noting the following points.
1. Ensure that the valve pintle (see Fig. U10) is secure on the valve stem.
2. Ensure that the valve and mounting flange joint faces are clean and free from carbon deposits.
3. Always use a new mounting flange gasket.

E.G.R. valves - To clean
1. Remove the valves as described in E.G.R. valves - To remove.
2. Using a scraper, remove all carbon film from the valve and mounting flange faces; complete the operation with a wire brush.
3. Clean the carbon from the valves using a wire brush fitted into a portable drill. Take care not to damage the valve seating area.
4. Thoroughly blow out the valves with compressed air to ensure that all loose carbon particles are removed.
5. Upon completion of the cleaning operations, fit the valves to the engine mounting flange as described in E.G.R. valves - To fit.

E.G.R. valves - To check
The E.G.R. system is automatically controlled by exhaust backpressure to maintain a constant E.G.R. proportion over normal road load conditions. Checks to ensure the correct operation of the valves are only required under no load conditions as follows.

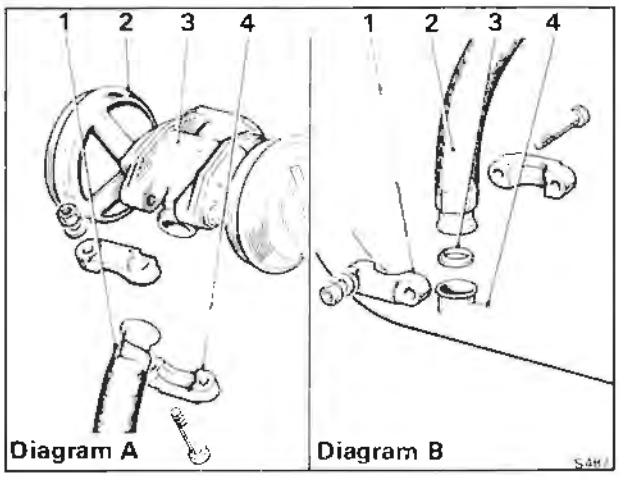

Fig. U11 E.G.R. feed pipe joints
Diagram A - Upper joint
1 Feed pipe
2 E.G.R. valve
3 E.G.R. valve mounting block
4 Clamp bracket
Diagram B - Lower joint
1 Clamp bracket
2 Feed pipe
3 Sealing ring
4 Exhaust balance pipe

1. Connect an electric impulse tachometer to the engine in accordance with the manufacturer's instructions.
2. Ensure that the parking brake is firmly applied and that the gear range selector is in the Park position.
3. Ensure that the pressure tapping cap fitted to the weakening device is correctly tightened.
Start and run the engine until normal operating temperature is attained.
4. Ensure that the engine has run for at least 25 mins. after the engine coolant thermostat has opened.
5. Allow the engine to return to the idle speed.
6. Increase the engine speed slowly noting the operation of the E.G.R. valves.
7. The E.G.R. valves should commence to open between 700 r.p.m. and 950 r.p.m.
If the valves either fail to open or open late check for the following possible causes.
a. Failed E.G.R. cut-out switch (see Section U7).
b. Failed E.G.R. cut-off solenoid (see Section U7).
c. Failed E.G.R. full throttle cut-out micro-switch (see Section U7).
d. Leak or blockage in the carburetter signal pipe to weakening device cut-off solenoid.
e. Leak or blockage in the E.G.R. valve signal pipe or hose from the E.G.R. cut-out solenoid to the E.G.R. valves.
f. Advanced ignition timing (see Section U6).
If the valves begin to open early check for the following possible cause.
a. Retarded ignition timing (see Section U6).
8. If the E.G.R. valves do not function correctly after carrying out Operations 1 to 7 inclusive, replace the offending valve(s) with new units.
9. Carry out Operations 1 to 7 inclusive.

E.G.R. feed pipe (see Fig. U5)
The E.G.R. feed pipe conveys exhaust gas that is to be recirculated from the exhaust balance pipe to the exhaust gas recirculation valves.

E.G.R. feed pipe - To remove
1. Unscrew the two 7/16 in. A/F nuts from the clamp at the upper end of the feed pipe (see Fig. U11).
2. Collect the two washers and 'split' the clamp from the spherical joint.
3. Repeat Operations 1 and 2 on the lower joint adjacent to the exhaust system balance pipe.

E.G.R. feed pipe - To fit
Fit the E.G.R. feed pipe by reversing the procedure given for removal, noting the following.
1. Ensure that the joint faces are clean and free from carbon deposits.

E.G.R. valves heatshield - To remove
1. Slacken the two forward ½ in. A/F nuts one on either side of the mounting flange.

2. Unscrew and remove the two 7/16 in. A/F set-screws retaining the heatshield to the rear of 'B' bank air horn; collect the washers.
3. Ease the assembly forward to release the heatshield slots from the retaining studs.
4. Withdraw the heatshield.

E.G.R. valves heatshield - To fit
Fit the heatshield by reversing the procedure given for removal.

Oxidation catalyst system (see Figs. U5 and U12)

A dual exhaust system is used. The catalytic converters are situated in the forward underfloor area, in place of the conventional front silencers (see Fig. U5).

Each converter contains two catalyst blocks of unequal length and has sufficient volume to perform the dual functions of converter and silencer (see Fig. U12). Two converters are fitted to each car, one for each bank of the engine cylinders.

A platinum group metal catalyst on a ceramic monolith support has been chosen for optimum conversion efficiency and rapid warm-up. Two separate blocks are used to minimise the effect of thermal shock, and these are positioned to give good gas distribution and effective utilisation of the catalyst volume.

The catalyst promotes the reaction between the residual hydrocarbons and carbon monoxide in the exhaust and the secondary air injected into the exhaust ports.

Catalytic converter protection
To protect the catalytic converters from damage due to overheating (caused by engine malfunction) a warning system is fitted to the exhaust catalytic converters and the car floor (see Fig. U44). This warning system will illuminate a red warning lamp on the facia if the temperature becomes excessive in any of the areas mentioned.
Note
If an exhaust overheat condition is signalled the speed of the vehicle must be reduced to 50 k.p.h. (30 m.p.h.) and this speed must not be exceeded until the cause of the overheat warning has been investigated and corrected by an authorised Distributor/Retailer.

Further protective measures to be observed are as follows.

Unleaded gasoline

Use unleaded gasoline only (88 RON Min.). The use of leaded gasoline will result in a substantial reduction in the performance of the catalyst. Under no circumstances add fuel system cleaning agents to either the fuel tank or carburetters for induction into the engine, as these materials may have a detrimental effect on the catalytic converter.

Fuel

Do not allow the vehicle to run out of fuel. If the vehicle does run out of fuel at a high speed, possible damage to the catalyst could result.

Engine malfunction

If the engine misfires or suffers from a lack of power which could be attributed to a malfunction of either the ignition or fuel systems, the vehicle should be driven only at low speed and the fault rectified as soon as possible. Driving at high speeds with a malfunction in either of these systems could cause overheating and consequent damage to the catalyst.

Catalytic converter - To remove
1. Remove the screws retaining the relevant section(s) of the grass-fire shields below the catalytic converter.
Note
Take care when removing the shields as the sharp edges could cause injury to the operators hands.
2. Unscrew the adapter and withdraw the catalyst overheat sensor (see Fig. U43).

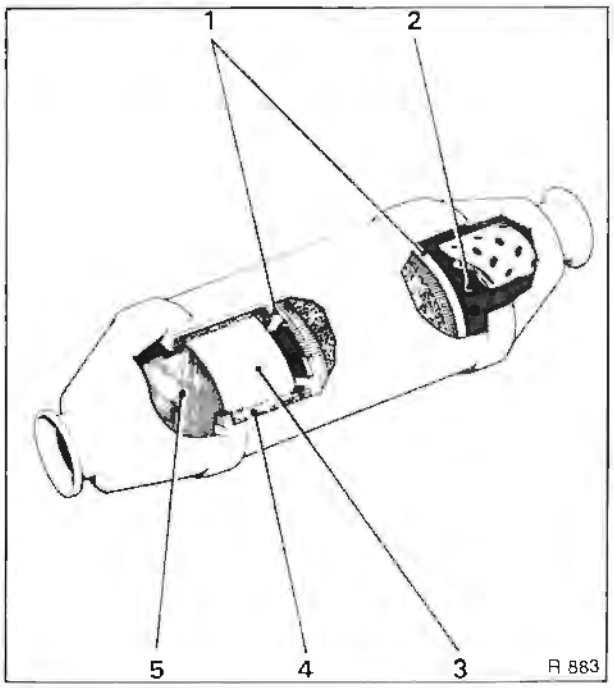

Fig. U12 Catalytic converter assembly
1 Stainless steel mesh retaining rings
2 Silencing chamber
3 Fireclay coating
4 Stainless steel mesh
5 Monolithic catalyst

Printed in England
© Rolls-Royce Motors Limited 1978
January 1978
T.S.D. 4200
(Japan)

3. Using a 9/16 in. A/F spanner, slacken the nuts on the spherical joint clamps immediately to the front and rear of the catalytic converter.
4. Support the weight of the catalytic converter and remove the nuts from the spherical joint clamps. Dismantle and remove the clamps.
5. Withdraw the catalytic converter and collect the spherical sealing rings from between the pipe connections.

Catalytic converter - To fit

Fit a catalytic converter by reversing the procedure given for removal, noting the following.
1. The seal rings and pipe flares must be thoroughly clean and free from scale and may be lightly dressed with fine emery cloth if required.
2. The clamp bolt threads should be lightly oiled to prevent binding during assembly and the spherical faces of the sealing rings and the grooves in the clamps should be smeared with a graphite lubricant, to ensure correct alignment of the pieces on assembly.
3. Fit the catalytic converter assembly complete with seal rings, then loosely fit the joint clamps.

Note

The catalytic converter assembly should be fitted with the square shaped catalyst cells (visible when looking along the short pipe into the catalytic converter assembly) towards the front of the vehicle and the perforated tube (visible when looking along the short pipe into the catalytic converter assembly) towards the rear of vehicle.

The sealing rings should be fitted between the pipe connections so that the sealing ring with the smaller diameter hole in the centre is fitted to the rear of the catalytic converter assembly.

Printed in England
© Rolls-Royce Motors Limited 1978
January 1978
T.S.D. 4200 (Japan)

Section U3

Fuel evaporative emission control system

The Fuel Evaporative Emission Control System eliminates direct venting of the fuel system, thus preventing the release of unburnt hydrocarbons into the atmosphere.

Vapour from the fuel system is collected and stored in a charcoal filled canister. The canister is purged whenever the engine is running and the stored fuel vapour is extracted from the charcoal and burnt in the engine.

The system is illustrated in Figure U13 and comprises the following main components.

Canister (see Fig. U14)
Carbon granules (charcoal)
Float chamber connection
Fuel tank connection
Polyurethane air filter
Purge line connection
Weakening device connection

Fuel tank (see Fig. U16)
Combined pressure/vacuum relief valve
Expansion tank
Fuel trap assembly

Purge line (see Fig. U13)
Air filter
Restrictor

Weakening device (see Figs. U23 and U24)
Adjustable orifice
Air filter
Anti 'run-on' solenoid
Cut-off solenoid
Cut-out switch
Float chamber drain valve
Float chamber vent valve
Fuel receiver chamber
Non-return valves
Venturi chamber

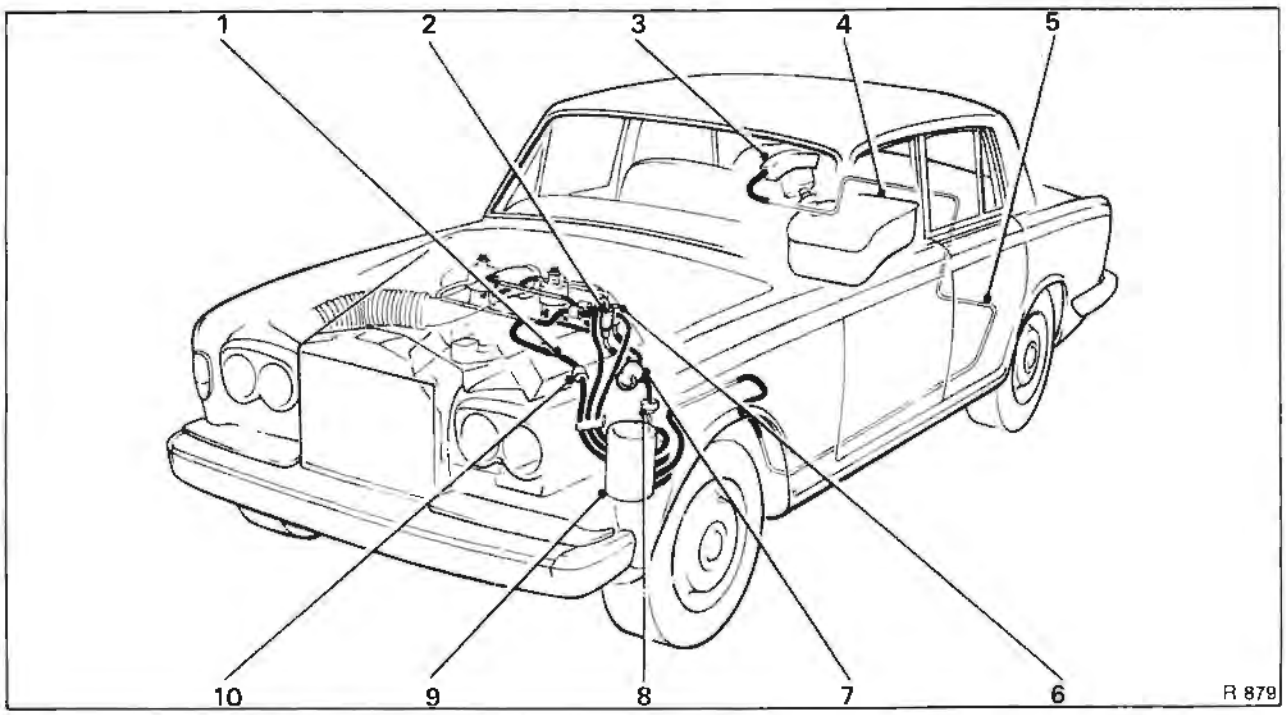

Fig. U13 Fuel evaporative emission control system

1 Purge line restrictor
2 Float chamber vent valve
3 Fuel trap assembly
4 Fuel tank
5 Fuel vapour line
6 Weakening device
7 Weakening device filter
8 Float chamber drain valve
9 Evaporative loss control canister
10 Purge line filter

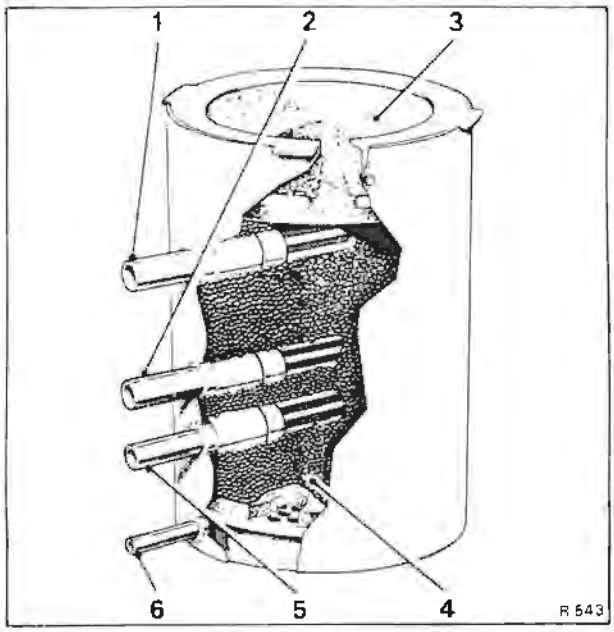

Fig. U14 Control canister
1 Weakening device connection
2 Float chamber vent connection
3 Polyurethane filter
4 Carbon
5 Fuel tank vent connection
6 Purge line connection

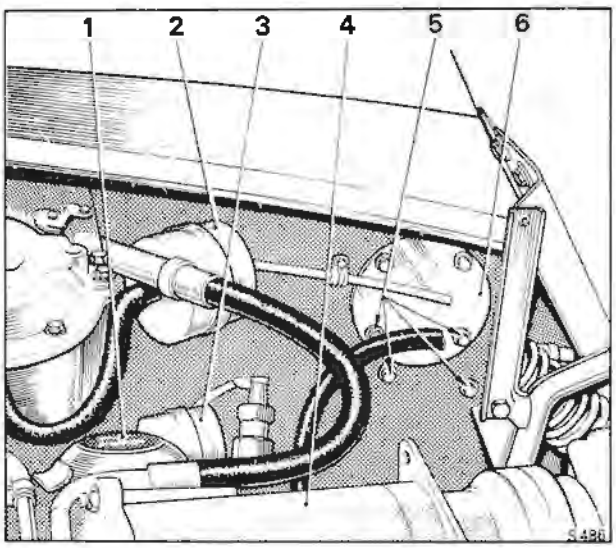

Fig. U15 Foam filter access cover, purge line filter and weakening device filter
1 Engine oil filler cap
2 Weakening device filter
3 Purge line filter
4 Refrigeration compressor
5 Canister securing setscrews
6 Foam filter access cover

For details of the servicing and maintenance requirements of the Fuel Evaporative Emission Control System, refer to the Service Schedules Manual - T.S.D. 4117.

Control canister (see Figs. U13 and U14)
The evaporative emission control canister is situated under the left-hand front wing. It is a cylindrical container filled with activated carbon granules which adsorb and retain fuel vapour. There are connections for the mixture weakening device vent, the fuel receiver vent, the fuel tank vent and the purge line. The top of the canister is open to atmosphere and contains a Polyurethane foam filter element.

When the engine is running air is drawn from the atmosphere through the foam filter element and carbon granules to the lowest connection on the canister. The air, containing fuel vapour from the carbon granules then passes into the engine via the purge line.

Control canister - To remove
1. Remove the front left-hand road wheel as described in Chapter R.

Note
Left-hand is determined when viewed from the driver's seat.

2. Remove the front section of the underwing sheet by unscrewing the small screws situated around the outer edge of the sheet. Resistance may be experienced when the sheet is being freed, as it is sealed around the edge with Bostik Sealing Compound 771.
3. The canister will be clearly visible towards the front of the vehicle.
4. Using the special pliers (RH 8090), remove the steel retaining clips from the four hose connections to the canister. Label the hoses to facilitate identification and withdraw the four hoses from the canister.
5. Raise the bonnet and from inside the engine compartment locate the canister foam filter access cover (see Fig. U15).
6. Unscrew and remove the four setscrews indicated as securing setscrews in Figure U15. Before removing the final setscrew support the control canister.
7. Withdraw the canister from beneath the wing.

Control canister - To fit
Fit the canister by reversing the procedure described for removal, noting the following points.
1. Ensure that the rubber hoses are in a good condition and new hose retaining clips are fitted.
2. Ensure that the underwing sheet is sealed with Bostik Sealing Compound 771.

Polyurethane foam filter element - To renew

It is not necessary to remove the canister from the car in order to extract the polyurethane foam filter element. A detachable cover is situated in the left-hand valance (see Fig. U15).

1. Unscrew the four screws retaining the access cover, lift off the cover and withdraw the filter element from the top of the canister.

When fitting a new element, ensure that it is correctly positioned inside the retaining rim of the canister. Fit the access cover and tighten the setscrews.

Fuel tank assembly

The fuel tank assembly comprises the fuel tank, the expansion tank and the fuel trap assembly (see Fig. U16).

The fuel tank is vented from three positions to the fuel trap assembly which is mounted above the fuel filler. One vent is from the fuel filler neck and the others are from the fuel tank.

The three vent lines join at a common junction block situated adjacent to the fuel filler neck, the main vent line then passes to the fuel trap assembly.

From the fuel trap a vent line passes under the floor of the car to the evaporative loss control canister.

The fuel trap assembly acts as a liquid separator and prevents liquid fuel from being transferred to the evaporative loss control canister under severe driving manoeuvres when the fuel tank is full or during expansion of the fuel at high ambient temperatures.

A combined relief and vacuum valve fitted into the end of the fuel trap assembly prevents an excessive pressure 'build up' in the fuel tank due to vapourisation or depression (as fuel is consumed), in the event of a blockage in the vent line to the evaporative loss control canister.

Included in the main fuel tank is a small expansion tank (see Fig. U16) of 3,125 litres (5.5 Imp. pt. – 6.7 U.S. pints) capacity. The expansion tank inhibits complete filling of the main fuel tank and provides additional fuel expansion volume to contend with extreme temperature conditions.

When the car is being filled with fuel, the main fuel tank (without an expansion tank) could normally be completely filled, leaving only the filler neck, vent connector pipes and fuel trap assembly to accommodate the expansion of the fuel. An expansion tank is therefore situated in the upper part of the main fuel tank and as the fuel level rises above the lower part of the assembly it flows inside through two small holes in the base. Two additional holes in the top of the expansion tank allow air to escape.

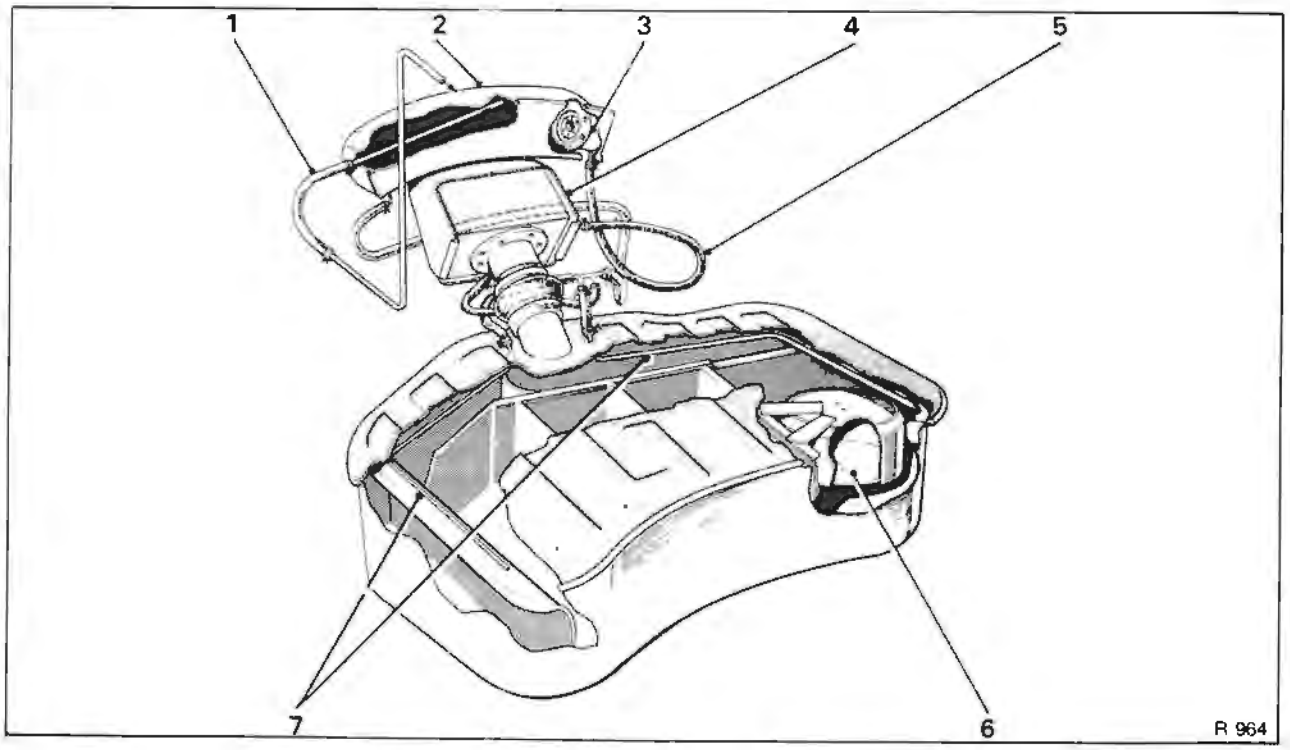

Fig. U16 Fuel tank

1 Fuel vapour line
2 Fuel trap assembly
3 Combined relief and vacuum valve
4 Fuel filler box
5 Relief valve vent
6 Expansion tank and overfill limiter
7 Vent pipes

Printed in England
© Rolls-Royce Motors Limited 1978
January 1978
T.S.D. 4200 (Japan)

Fuel tank - To remove

1. Carry out the usual workshop safety precautions.
2. Disconnect the battery.
3. Drain the fuel from the tank.
4. Remove the carpet and underlay from the luggage compartment floor to reveal the fuel tank (see Fig. U17).
5. Unscrew the four screws securing the circular metal cover over the float assembly (see Fig. U17), withdraw the cover.
6. Disconnect the three electrical leads from the float assembly (see Fig. U18); tape the loom away from the vacinity of the fuel tank.
7. Using the special pliers (RH 8090) remove the steel clip from the rubber hose situated one on either side of the fuel tank filler (see Fig. U19).

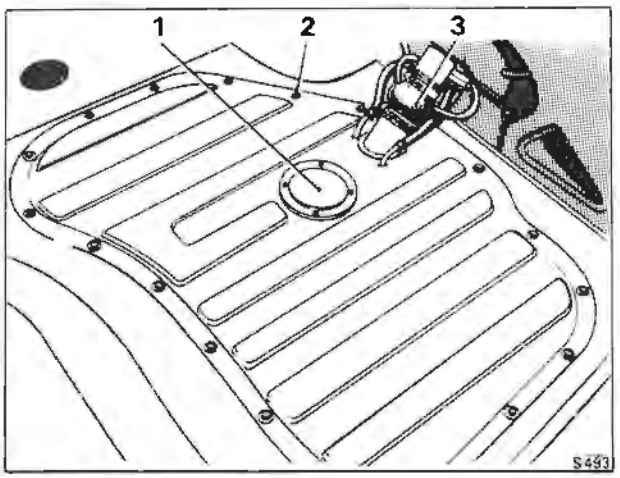

Fig. U17 Fuel tank installation

1 Float assembly cover
2 Fuel tank securing setscrews
3 Fuel filler assembly

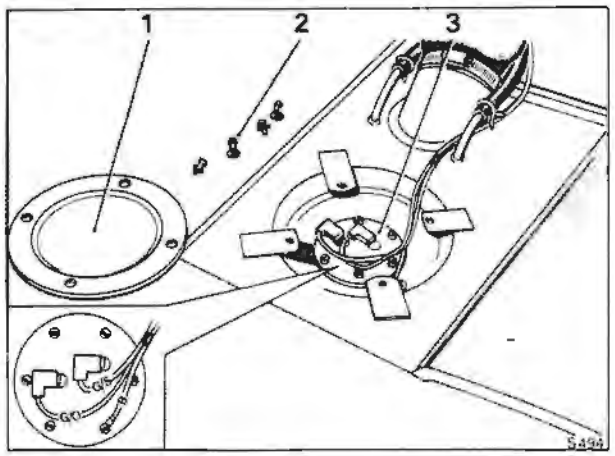

Fig. U18 Float assembly

1 Cover
2 Cover securing screws
3 Float assembly

8. Unscrew the worm drive clips securing the convoluted rubber filler hose to the filler box and tank filler connections; detach the convoluted hose from the fuel tank and blank off both open ends of the connection.
9. From under the car, unscrew the adapter securing the fuel feed pipe to the fuel tank (see Fig. U20), blank off both open ends of the connection.
10. Inside the luggage compartment, unscrew the 7/16in. A/F setscrews situated around the fuel tank.
11. Carefully 'break' the seal between the fuel tank and the luggage compartment.
12. Withdraw the fuel tank by lifting it out through the luggage compartment.

Fuel tank - To fit

Fit the fuel tank assembly by reversing the procedure given for removal, noting the following points.

1. Apply a sealant such as 'Glasticon' to the luggage compartment floor around the area of the fuel tank securing setscrew holes (this area is used for seating the lip of the fuel tank), to provide a good seal when the fuel tank assembly is installed.
2. Ensure that all rubber hoses are in a good condition.
3. Always fit new steel clips to retain the various vent hoses.
4. After fitting the fuel tank, ensure that the adapter securing the feed pipe does not leak fuel with the fuel pumps operating.

Fuel trap assembly - To remove

1. Disconnect the battery and ensure that the usual workshop safety precautions are carried out.
2. Remove the carpet and underlay in the luggage compartment.
3. Remove the tool kit.
4. Remove the fuel filler door release ring.
5. Unscrew the five 'Phillips' headed screws from the side carpet; four secure the brackets retaining the tool kit and the fifth is positioned at the front of the side carpet.
6. Release the 'Tenax' clip situated adjacent to the rear lamps access point.
7. Remove the side carpet and the carpet covering the fuel filler neck. The carpet panel covering the filler neck is retained by a setscrew at the top (accessible from within the fuel filler box) and a small screw at the rear (that screws into the luggage compartment floor).
8. Using special pliers (RH 8090) remove the steel clips from the rubber hoses. Withdraw the hoses from their respective pipes.
9. Locate the electric loom that is fitted adjacent to the fuel trap assembly (see Fig. U21). Straighten the three clips securing the loom in the vacinity of the fuel trap assembly.

Gradually ease the loom in a downwards direction until it lies as shown in Figure U21; in this position the loom will not impede the removal of the fuel trap.

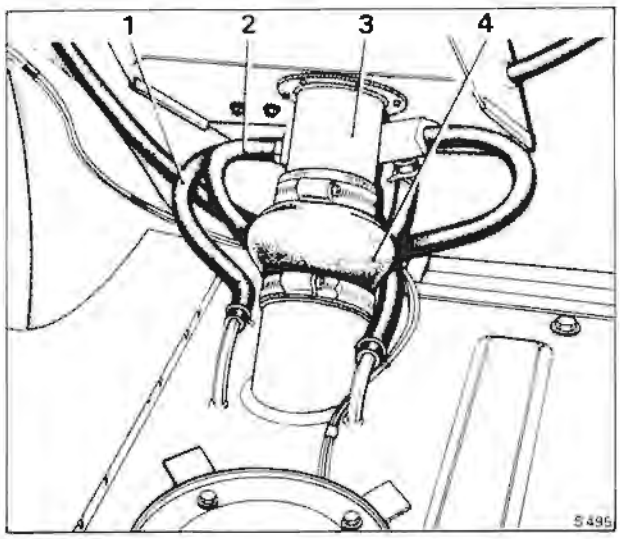

Fig. U19 Fuel filler assembly
1 Vent - Tank to junction block
2 Vent - Filler to junction block
3 Metal filler pipe
4 Convoluted filler hose

10. Unscrew and remove the three 2 B.A. setscrews securing the fuel trap assembly.
11. Slowly move the fuel trap rearward and downward until the lower end can be turned into the luggage compartment and the assembly withdrawn from the car.

Fuel trap assembly - To fit
Fit the fuel trap assembly by reversing the procedure given for its removal noting the following points.
1. Ensure that the rubber hose connections are in good condition.
2. Ensure that new steel retaining clips are used.

Fuel trap relief and vacuum valve - To remove
1. Remove the fuel trap assembly as described in Fuel trap assembly - To remove.
2. Unscrew the retaining setscrews, taking care not to lose the washers.
3. Withdraw the relief and vacuum valve.

Fuel trap relief and vacuum valve - To fit
Fit the relief and vacuum valve by reversing the procedure given for its removal noting the following points.
1. Ensure that the joint faces of the relief and vacuum valve and fuel trap assembly are clean and in good condition.
2. Fit a new gasket.

Fuel filler - To remove
1. Refer to Fuel trap assembly - To remove and carry out Operations 1 to 8 inclusive.
2. From inside the luggage compartment unscrew and remove the metal connection for the vent hose situated half-way up the metal filler pipe.
3. Unscrew the worm drive clips securing the convoluted rubber hose.
4. From inside the filler box remove the screws securing the filler assembly to the body.
5. Withdraw the metal filler assembly.

Fuel filler - To fit
Fit the fuel filler by reversing the procedure given for removal, noting the following points.
1. Fit new gaskets if necessary.

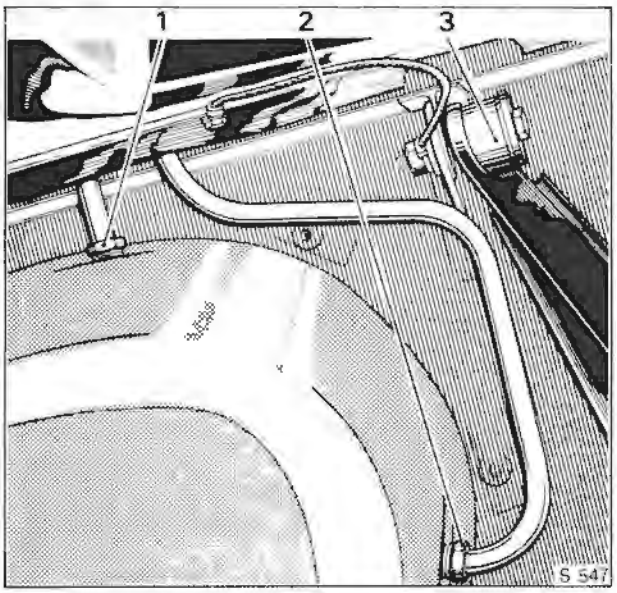

Fig. U20 Fuel pipes
1 Fuel feed pipe
2 Fuel return pipe
3 Spare wheel carrier pivot

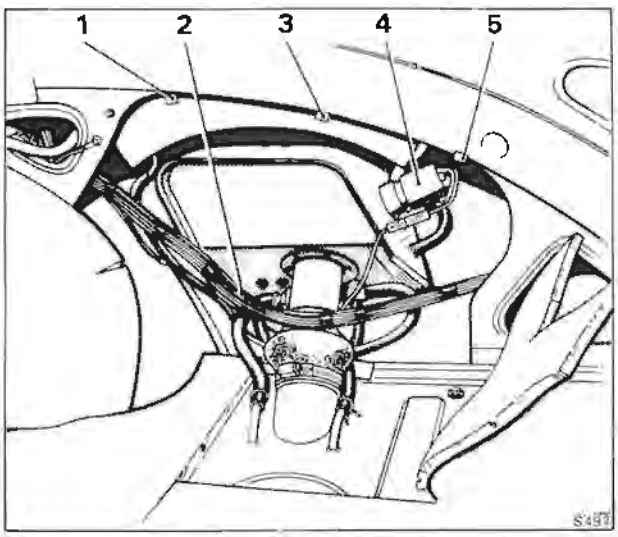

Fig. U21 Fuel trap removal/fitting
1 Loom retaining clip
2 Loom
3 Loom retaining clip
4 Fuel filler door release solenoid
5 Loom retaining clip

Printed in England
© Rolls-Royce Motors Limited 1978
January 1978
T.S.D. 4200
(Japan)

Fuel evaporative emission control system - To leak check

Whenever the various pipes, hoses and components of the fuel evaporative emission control system are disturbed, the system should be checked for air leaks upon assembly.

To test the system proceed as follows.

1. Position the vehicle on a ramp and carry out the usual safety precautions (i.e. ensure that the gear range selector lever is in 'Park' position, the parking brake firmly applied, the engine switched off, etc.,). Raise the ramp.
2. Remove the left-hand horn assembly (left-hand is decided when standing under the vehicle, looking towards the front), see Chapter M.
3. Through the resultant gap between the front wing and wing sheet, locate the emission control canister and identify the hose connection from the fuel tank (second from the bottom).
4. Using the special pliers (RH 8090), remove the steel retaining clip from the fuel tank connection hose at the control canister.
5. The fuel tank hose should be detached from the canister and connected to the test equipment (see Fig. U22).
6. Apply air pressure to the fuel tank hose via the test equipment until a reading of 38 cm. (15 in.) H_2O is attained and close the pressure supply.

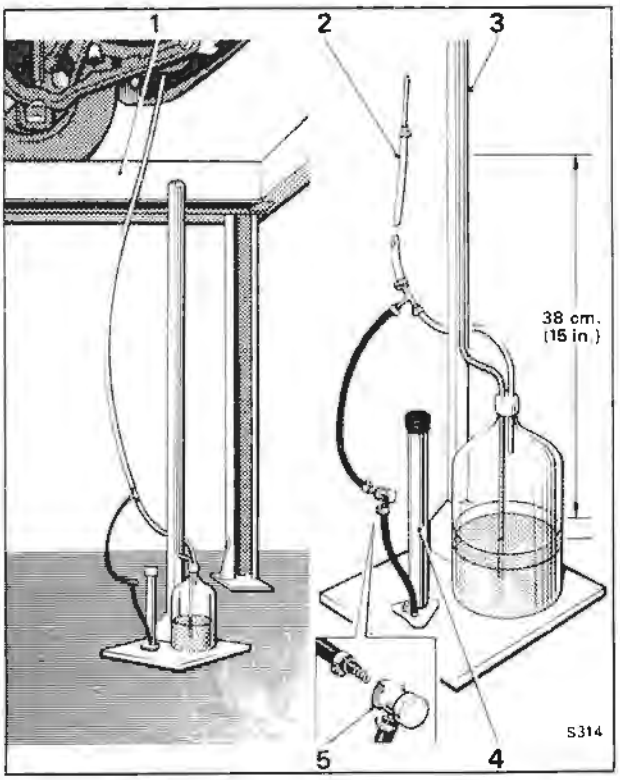

Fig. U22 Leak check test equipment

1 Ramp
2 Connection to fuel tank/canister hose
3 Test equipment
4 Pump
5 One way pressure valve

7. After 5 minutes again check the pressure reading, this should not have fallen by more than 12,7 mm. (0.5 in.).
8. If the pressure drop is more than 12,7 mm. (0.5 in.), progressively treat all joints in the system with soap solution to detect air leaks.
9. Rectify any air leaks and again leak check the system.
10. When the system is satisfactory, detach the test equipment and connect the hose to the control canister, secure with a new steel retaining clip.
11. Fit the left-hand horn assembly as described in Chapter M.

Purge line

The purge line consists of a rubber hose, passing from the lowest connection on the canister through the valance junction piece to the induction manifold connection on the opposite side of the engine (see Fig. U13). Incorporated into this hose is the purge line filter and restrictor.

When the engine is running, air drawn through the canister filter and carbon picks up the stored fuel vapours and passes them via the hoses, to the induction system at a point just below the choke housing. The restrictor in the line controls the flow rate at between 1,41 cu.m. per hr. and 1,98 cu.m. per hr. (50 cu.ft. per hr. and 70 cu.ft. per hr.) to maintain carburetter metering accuracy and the paper element line filter is fitted to prevent blockage of the restrictor.

Purge line filter

The purge line filter is situated on the left-hand valance just forward of the front road spring pot (see Fig. U15). The air filter assembly is a sealed unit and no attempt should be made to clean the element.

At the mileage intervals specified in the Service Schedules the purge line filter should be removed and a new assembly fitted as follows.

Purge line filter - To remove

1. Using the special pliers (RH 8090) remove the two steel retaining clips situated one on either side of the filter assembly.
2. Detach the inlet and outlet hoses.
3. Slacken the small setscrew that secures the clamp bracket around the filter assembly.
4. Swivel the clamp bracket to enable the filter assembly to be withdrawn.

Purge line filter - To fit

Fit the purge line filter by reversing the procedure given for removal, noting the following points.

1. Ensure that the filter assembly is fitted the correct way around; the word 'IN' moulded into the end of the casing should be towards the front of the vehicle.
2. Ensure that the rubber hoses are in a good condition and that new hose retaining clips are used.

Printed in England
© Rolls-Royce Motors Limited 1978
January 1978
T.S.D. 4200 (Japan)

Purge line restrictor
The purge line restrictor is situated in the purge line between the air filter and the induction manifold connection (see Fig. U13). The function of the restrictor is to maintain the air flow through the purge line within predetermined limits.

Purge line restrictor - To remove
1. Hold the restrictor firmly and slide the rubber hosing from both ends.

Purge line restrictor - To fit
Fit the restrictor by reversing the procedure given for removal, noting the following point.
1. Ensure that the purge line restrictor is fitted into the line correctly. This can be determined by comparing the diameters of the restrictor ends with those of the rubber hoses.

Purge flow rate - To check
1. Disconnect the hose from the engine side of the purge line filter and insert a flowmeter assembly (RH 8725) into the line between the filter and the restrictor. The flowmeter is a rotameter type capable of measuring between 1,4 cu.m/hr. and 2,0 cu.m/hr. (50 cu.ft/hr. and 70 cu.ft/hr.). The pressure drop across the meter must not exceed 5,08 cm.Hg. (2.0 in.Hg.).
2. Start and run the engine at 650 r.p.m.; the reading on the flowmeter should be between 1,41 cu.m/hr. and 1,99 cu.m/hr. (50 cu.ft/hr. and 70 cu.ft/hr.).
3. If the flow is less than the minimum figure quoted in Operation 2, stop the engine and substitute the purge line restrictor with a straight piece of metal pipe having an internal diameter larger than 4,76 mm. (0.187 in.).
4. Start and run the engine at 650 r.p.m.; the reading on the flowmeter should be in excess of 1,99 cu.m/hr. (70 cu.ft/hr.).
5a. If the flowmeter reading is above 1,99 cu.m/hr. (70 cu.ft/hr.) fit a new purge line restrictor and repeat Operation 2.
b. If the flowmeter reading is below 1,99 cu.m/hr. (70 cu.ft/hr.) the cause could be as follows.
(i) An air leak in any of the vacuum hoses that connect to the induction manifold connection (vacuum manifold).
(ii) A blockage in the vacuum manifold or any of the connecting hoses.

Any leaks or blockages should be rectified; the restrictor should be fitted and Operation 2 repeated. If the flow rate is still incorrect fit a new restrictor and again, repeat Operation 2.
6. Remove the test equipment and connect the hose to the purge line filter.

Weakening device

The mixture weakening device (see Fig. U23) is fitted adjacent to 'B' bank carburetter and incorporates a fuel receiver.

For any given position of the fuel metering needle, the rate of the discharge from the carburetters is governed by the difference in air pressure existing over the fuel in the float chamber and that over the jet.

The weakening device is designed to reduce the air pressure (create a depression) in the float chamber at part throttle, thereby reducing the rate of discharge from the jet.

The weakening device housing contains two chambers, (see Fig. U24), the venturi chamber, and the fuel receiver chamber, the two being interconnected by a passage and an adjustable venturi.

The venturi chamber is connected to a small drilling on the edge of the butterfly plates of both carburetters via the weakening device solenoid valve, with the throttle slightly open the drillings are subjected to manifold depression thus creating a depression in the venturi chamber which draws air from the weakening device air filter. This depression is also apparent in the fuel receiver chamber and subsequently in the carburetter float chambers.

The value of the depression is set by the position of the weakening device adjusting screw.

To obtain adequate float chamber venting to cope with hot soak conditions there is an additional vent from the fuel receiver. This incorporates a low pressure non-return valve to maintain float chamber depression under normal running conditions. In addition to this valve, a one-way valve is fitted into the venturi chamber to prevent any evaporating fuel being discharged to atmosphere.

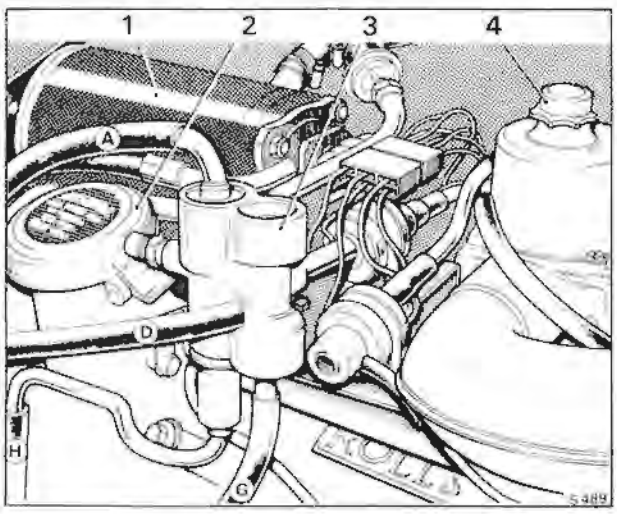

Fig. U23 Position of mixture weakening device
1 Refrigeration compressor
2 Engine oil filler
3 Mixture weakening device
4 'B' bank carburetter

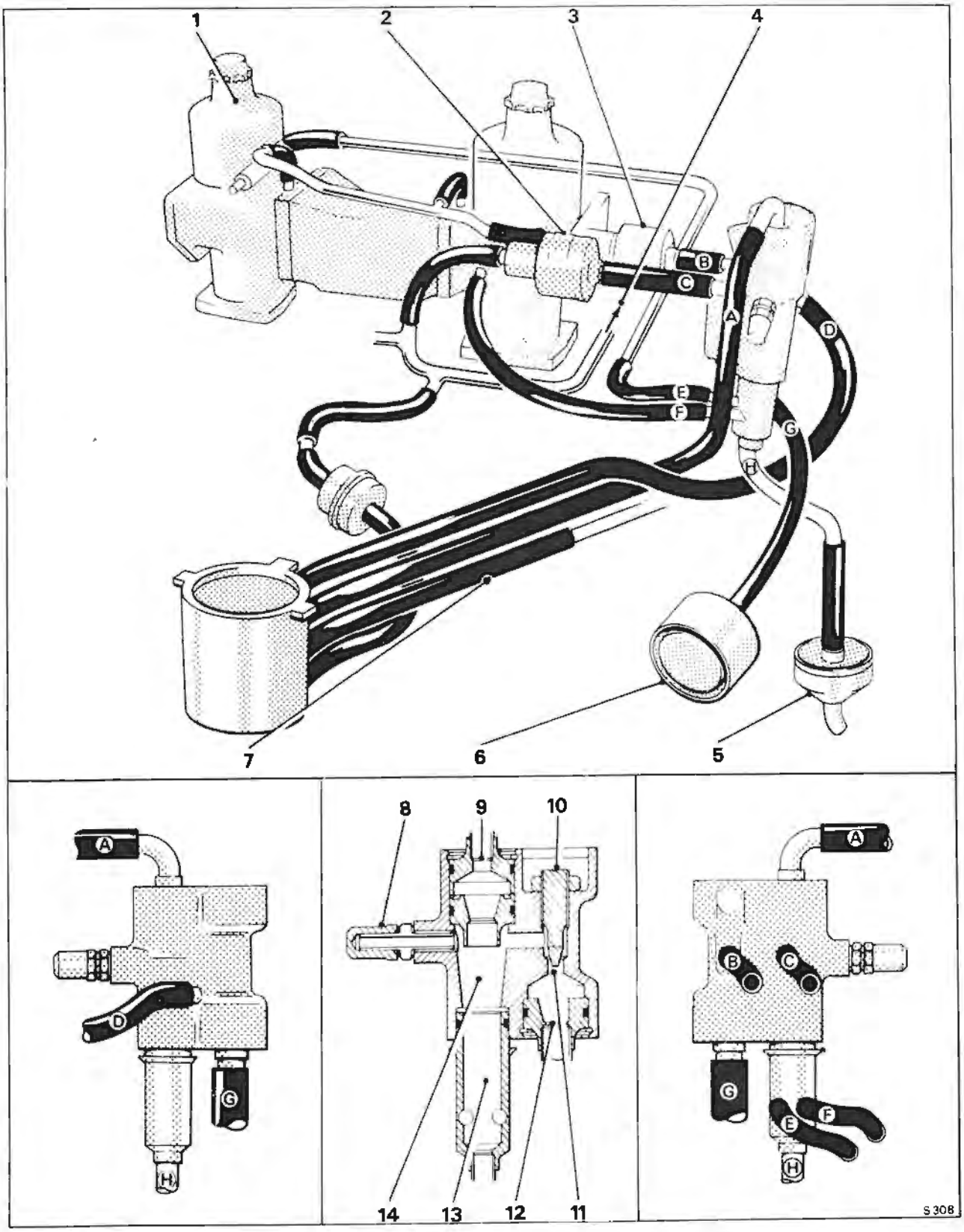

Fig. U24 Mixture weakening device

1 'A' bank carburetter
2 Anti 'run-on' solenoid
3 Weakening device cut-off solenoid
4 Induction manifold connection
5 Float chamber drain valve
6 Weakening system air filter
7 Vent from fuel tank
8 Weakening device signal cap
9 Float chamber vent valve
10 Adjusting screw
11 Venturi chamber
12 Air intake valve
13 Fuel receiver
14 Fuel receiver chamber

A float chamber drain, also incorporating a low pressure non-return valve is mounted at the front of the engine adjacent to the oil filter, this valve is connected to the fuel receiver. Should flooding occur the head of fuel in the receiver is sufficient to open the drain valve thus preventing engine stalling if the float chamber needle valves stick.

Weakening device - To remove
1. Label all hoses connected to the weakening device assembly, this will facilitate assembly.
2. Disconnect all hoses to the weakening device.
3. Unscrew and remove the two small setscrews that retain the weakening device to the solenoid platform; the two screws are situated just below the pipe/hose connections for the anti 'run-on' solenoid and weakening device cut-off solenoid.
4. Withdraw the weakening device.

Weakening device - To fit
Fit the weakening device by reversing the procedure given for removal, noting the following point.
1. Ensure that all hoses connecting to the assembly are in a good condition and that all connections are 'air tight'.

Weakening device - To dismantle (see Fig. U24)
1. Remove the weakening device from the vehicle.
2. Remove the small screw that secures the fuel receiver assembly into the base of the weakening device, withdraw the assembly.
3. Unscrew the weakening device signal cap, collect the cap fibre washer. Unscrew the signal line adapter from the casting and withdraw the aluminium washer from the adapter.
4. Remove the circlip from the top of the fuel receiver chamber, withdraw the float chamber vent pipe (slight resistance may be felt due to the rubber sealing ring). With a soft drift (e.g. wooden pencil), push the float chamber vent valve out of the weakening device assembly (the drift is required because the rubber sealing ring fitted around the vent valve will cause a small resistance).
5. Remove the circlip from the base of the venturi chamber, withdraw the **air intake pipe** containing a one-way valve (slight resistance may be felt due to the rubber sealing ring).
6. Remove the **anti-tamper cover** from the top of the venturi chamber, unscrew the lock-nut and using a screwdriver unscrew the **adjusting screw**.

Weakening device - To assemble
To assemble the weakening device, reverse the procedure given for removal, noting the following.
1. Ensure that all components are clean before assembly.
2. Ensure that the rubber sealing rings are in a good condition and lightly smeared with the minimum amount of grease. Ensure that no grease is applied to the valves otherwise a malfunction may occur due to the grease making the valves stick.
3. After assembly, the operator should check that he can blow but not suck on the metal pipes, one on top of the fuel receiver chamber and the other at the bottom of the venturi chamber.

Weakening device signal strength - To check
The **float chamber depression** should be checked as follows.
1. Start and run the engine until normal setting conditions are attained (i.e. engine cooling system thermostat opened, air conditioning unit switched off and the automatic choke is off).
2. Stop the engine.
3. Connect an electric impulse tachometer to the engine in accordance with the manufacturer's instructions.
4. Disconnect the E.G.R. cut-off solenoid to carburetter signal pipe hose at the solenoid and blank off the hose.
5. Unscrew and remove the weakening device signal cap and connect a 0 to 15,5 cm. (0 to 6 in.) water manometer to the weakening device adapter.
6. Start and run the engine at 2 000 r.p.m. in 'Park' until a steady manometer reading is obtained, this should be 5,08 cm. (2.0 in.) of water depression.

A low or zero reading may be caused by
a. A blockage in the weakening device venturi to the weakening device cut-off solenoid.
b. A blockage or restriction in the signal pipe(s).
c. An air leak in the hoses or pipes from the float chambers to the emission control canister.
d. Faulty float chamber vent valve or drain valve.
e. Low engine temperature below 14°C. (57°F.) a faulty weakening device solenoid or weakening device switch.

A high reading may be caused by
a. An obstruction in the weakening device bleed orifice (weakening device signal strength adjusting screw).
b. Obstructed weakening device air filter or evaporative loss control canister.
c. Incorrect connection or blockage in the weakening device to either the valance connection or the evaporative loss control canister.
d. Weakening device air intake valve sticking closed.
e. Obstructed weakening device air filter hose.
f. Incorrect operation of anti 'run-on' solenoid.
7. If the float chamber depression is still incorrect after checking through the possible causes in Operation 6, set the weakening device signal strength (float chamber depression) by unlocking and turning the adjusting screw (see Fig. U24) until the correct manometer reading is obtained. Turning the adjusting screw clockwise increases the depression.
8. Remove the blank from the E.G.R. cut-off solenoid to signal pipe hose and connect the hose to the solenoid.

Printed in England
© Rolls-Royce Motors Limited 1978
January 1978
T.S.D. 4200 (Japan)

9. Raise the engine speed slowly noting both the manometer and tachometer readings. The maximum steady manometer reading should be obtained between 1 200 r.p.m. and 1 500 r.p.m.
10. Allow the engine speed to return to the idle setting (650 r.p.m.) and check the float chamber depression reading on the manometer.
If the float chamber depression at idle speed is above 10,16 mm. H_2O (0.4 in. H_2O) check the ignition timing at idle as this condition may result in unsatisfactory driveability.
11. Fit the tamperproof cover into the top of the venturi chamber.

Weakening device air filter - To remove
The air filter container is mounted on the left-hand valance just forward of the road spring pot (see Fig. U15).

This is a sealed unit and no attempt should be made to clean the element.
1. To remove the air filter assembly, detach the hose and unscrew the worm drive clip situated around the assembly.
2. Withdraw the assembly.

Weakening device air filter - To fit
Fit the air filter container by reversing the procedure given for removal.

Section U4

Crankcase emission control system

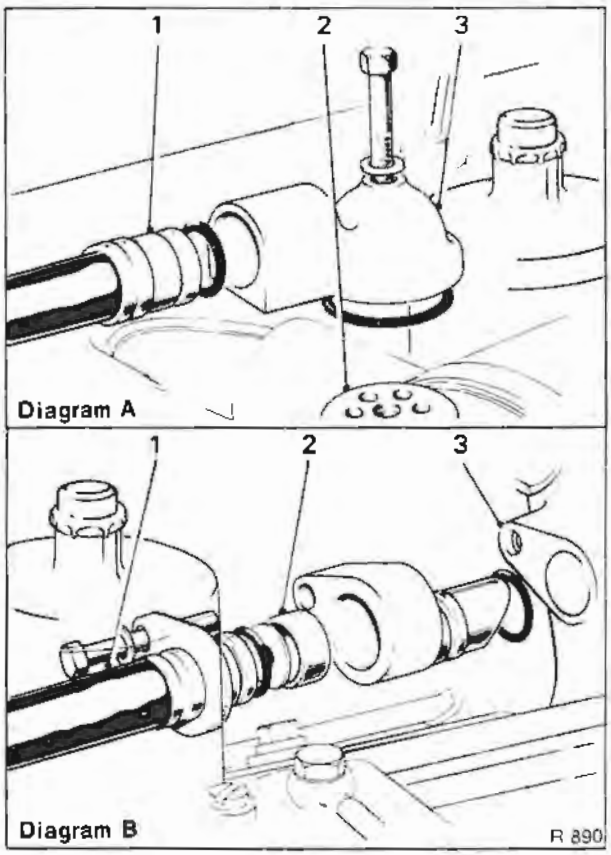

Fig. U25 Crankcase breather pipe connections

Diagram A		Diagram B	
1	Breather tube	1	Breather tube
2	Choke housing	2	Flame trap
3	Breather connection	3	Oil filler housing

Crankcase emissions are controlled by a recirculatory closed breather system.

An insulated draught tube connects the crankcase via the oil filler which is fitted with a sealed cap, to the choke housing upstream of both the choke butterfly and the carburetters. A flame trap capsule containing three wire mesh discs is fitted in a housing at the crankcase end of the draught tube. Engine emission (blow-by) is drawn into the induction system via the draught tube, due to the depression in the choke housing.

1. The flame trap fitted to the breather pipe should be cleaned in the following manner, at the specified mileage.
2. Unscrew the setscrew securing the breather pipe connection to the oil filler pedestal; withdraw the connection from the pedestal (slight resistance may be felt due to the rubber 'O' ring connections).
3. Withdraw the connection from the pipe flange and collect the restrictor.
4. Wash the flame trap assembly in clean petrol, then dry with a high pressure air line. The flame trap assembly consists of 3 gauzes crimped together as shown in Figure U25.
5. To clean the adapter fitted to the choke housing, remove the single setscrew from the breather pipe end connection and detach the pipe.
6. Clean the adapter fitted to the choke housing and ensure that the holes in the adapter are clear.
7. Assembly of the flame trap and breather pipe is in the reverse order, ensuring that the 'O' rings are in good condition.

Printed in England
© Rolls-Royce Motors Limited 1978

January 1978
T.S.D. 4200 (Japan)

Printed in England
© Rolls-Royce Motors Limited 1978
January 1978
T.S.D. 4200
(Japan)

Section U5

Carburetters and Automatic choke system

The Carburetter and Automatic Choke System can be seen illustrated in Figure U26 and comprises the following main components.

Automatic choke
'Fast-idle'
Stove pipe
(For the remainder of the Automatic Choke System refer to Chapter K).

Carburetters (see Fig. U28)
Bi-metal jet lever
Carburetter fuel filter
Carburetter idle airflow balance
Float
Float chamber
Float needle
Jet assembly
Jet needle
Overrun valve
Piston
Piston damper
Piston damper retainer (Piston ball race clip)
Suction chamber
Tamperproof caps
Throttle disc
Throttle linkage
Viscosity compensator

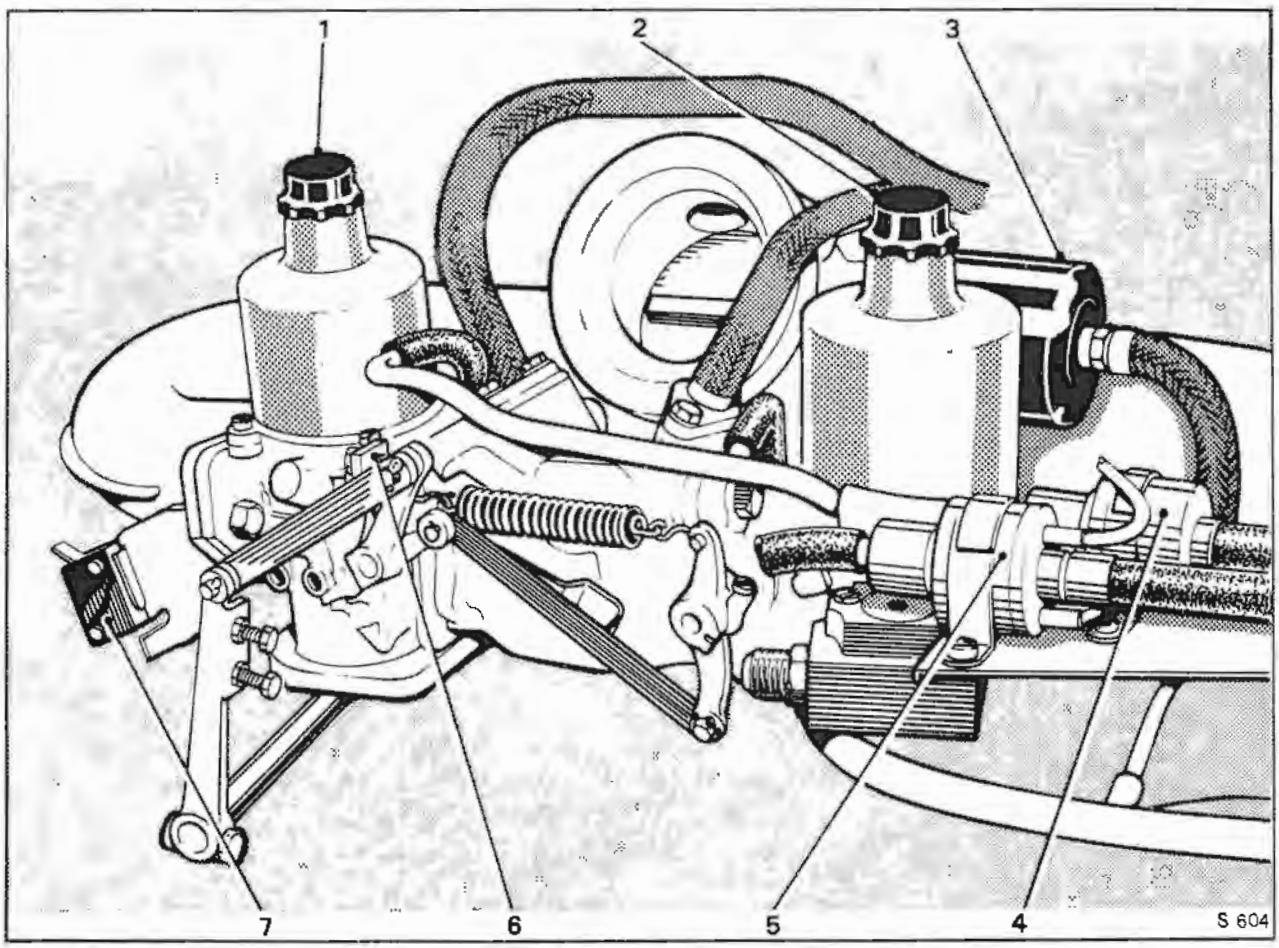

Fig. U26 Carburetters and linkage

1 'A' bank carburetter
2 'B' bank carburetter
3 Choke bi-metal housing
4 Weakening system cut-off solenoid
5 Anti 'run-on' solenoid
6 Idle speed adjusting screw
7 E.G.R. full throttle cut-out micro-switch

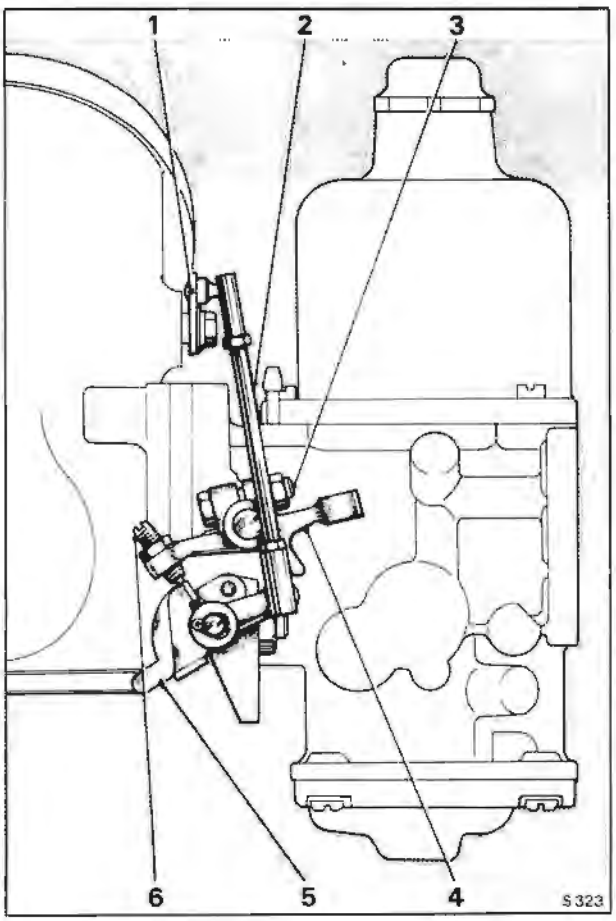

Fig. U27 Fast-idle mechanism

1 Control rod lever
2 Butterfly rod
3 Lever clamp bolt
4 'Fast-idle' lever
5 Cam
6 Adjusting screw

Temperature controlled air intake

Aircleaner/silencer
Air blend valve
Cold air intake
Hot air scoop
Manifold vacuum hose
Resonator
Temperature sensor

Weakening device

(Refer to Section U3).

Automatic choke

All details for the Automatic Choke System are given in Chapter K, except for the checking and setting procedures of the following.

'Fast-idle' - To set

1. Ensure that the usual safety precautions are carried out (i.e. parking brake firmly applied, gear range selector lever in 'Park' etc.) and connect an impulse tachometer in accordance with the manufacturer's instructions.
2. Disconnect the signal hose to the E.G.R. cut-off solenoid (not the hose from the solenoid to the E.G.R. valve), at the solenoid and blank the hose.
3. Remove the pressure tapping cap from the weakening device (see Fig. U24).
4. Open the throttles and close the choke butterfly against the bi-metal tension using control rod lever (item 1 - Fig. U27) until the adjusting screw (item 6 - Fig. U27) is resting on the tip of the fast-idle cam. At this point an extra load will be felt due to the action of the extended fast-idle plunger ceasing.
5. Start the engine, if the speed is outside a range of 850 r.p.m. to 900 r.p.m. stop the engine, open the throttles to gain access to the adjusting screw and turn the screw approximately ⅛ turn for each 20 r.p.m. required. Tighten the lock-nut.
6. Start the engine and again check the fast-idle speed.
7. When the engine speed has been adjusted to within the prescribed limits open the throttles to release the fast-idle mechanism.
8. Stop the engine, disconnect the tachometer, remove the blank from the E.G.R. signal hose to the cut-off solenoid and fit the hose to the solenoid. Fit the pressure tapping cap to the weakening device.

Choke stove pipe - To flow check

1. Ensure that the usual safety precautions are carried out (i.e. parking brake firmly applied, gear range selector lever in 'Park' etc.) and connect an impulse tachometer in accordance with the manufacturer's instructions.
2. Start and run the engine until normal operating temperature is attained. Stop the engine.
3. Disconnect the stove pipe union at the intake elbow (see Fig. U42) and connect a flowmeter (RH 8725) to the pipe via a connector (RH 8945). The flowmeter must be a rotameter type capable of measuring 2,9 cu.m/hr. (100 cu.ft/hr.).
4. Start and run the engine at idle speed (650 r.p.m.); observe the flowmeter, a correct reading is between 1,41 cu.m/hr. and 1,55 cu.m/hr. (50 cu.ft/hr. and 55 cu.ft/hr.)
5. If the flow is less than 1,41 cu.m/hr. (50 cu.ft/hr.) check the choke stove pipe unions for leaks.
6. If the flow is in excess of 1,55 cu.m/hr. (55 cu.ft/hr.), fit a new restrictor in the choke bi-metal housing (see Chapter K).

Carburetters

Two S.U. HIF7 (Horizontal Integral Float Chamber) carburetters with 4,76 cm. (1.875 in.) choke bores (see Fig. U28) are fitted to the engine on a central 'tee' piece which is mounted over an eight branch induction manifold.

This type of carburetter automatically adjusts both its choke and jet area to meet the demand of the engine which is dependent on engine speed and

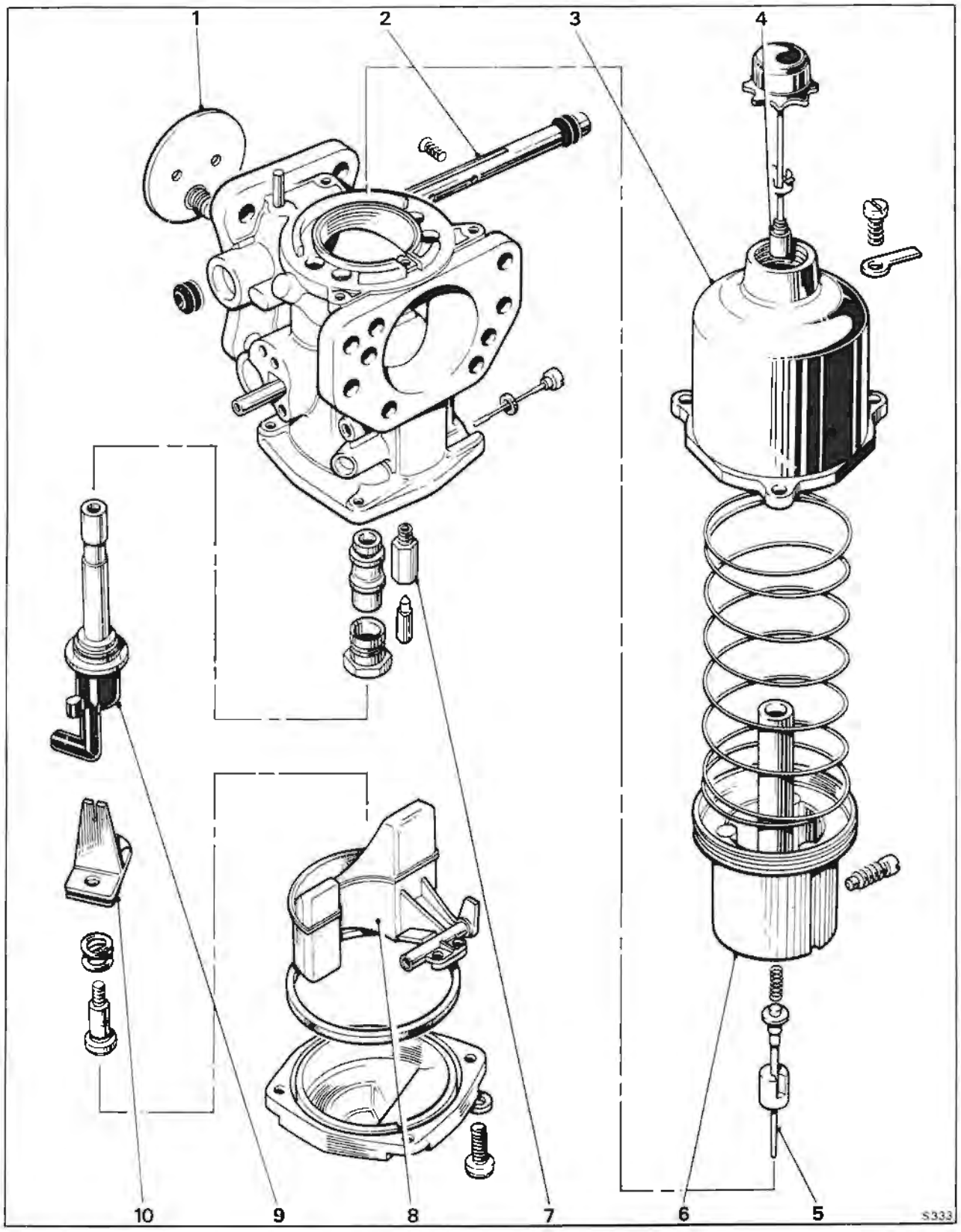

Fig. U28 SU HIF7 carburetter

1 Throttle disc with overrun valve
2 Throttle spindle
3 Suction chamber
4 Piston damper
5 Jet needle
6 Piston
7 Float needle valve assembly
8 Float
9 Jet assembly
10 Bi-metal jet lever

Printed in England
© Rolls-Royce Motors Limited 1978
January 1978
T.S.D. 4200 (Japan)

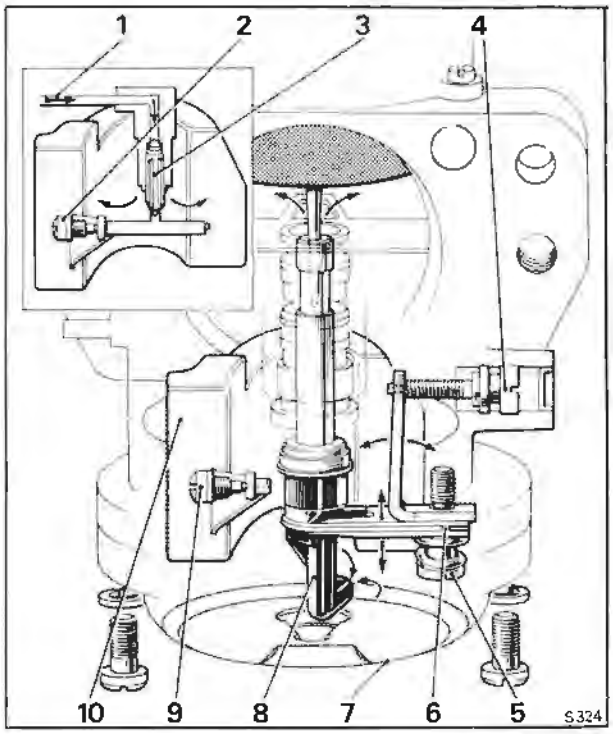

Fig. U29 Float chamber layout

1	Fuel inlet
2	Float fulcrum screw
3	Needle valve
4	Jet adjusting screw
5	Bi-metal pivot screw
6	Bi-metal assembly
7	Bottom cover-plate
8	Jet head
9	Float fulcrum screw
10	Concentric float

loading. As air is drawn through the carburetter, the piston acting as an obstruction will cause a depression to be formed in the area between the throttle and the piston. This depression is communicated by means of transfer holes in the base of the piston to the area above the piston, causing an upward force to be imposed on the piston. The piston will rise in response to this force relieving the depression in the area between the piston and the throttle as it does so until a point is reached where the force acting on the piston is balanced by the weight of the piston and the load exerted by the piston spring.

A spring-loaded jet needle is fitted to the carburetters, which is biased downstream and operates in a 2,54 mm. (0.10 in.) diameter main jet; this jet does not require centralising.

Float chamber (see Fig. U29)
The float chamber is incorporated in the main body casting, access to the chamber is obtained by removing the bottom cover-plate (item 7). The moulded float (item 10) is shaped so that it surrounds the jet tube and is pivoted along a line parallel to the inlet flange. The float is retained by a spindle (items 2 and 9) which screws into the body casting.

Entry of the fuel into the float chamber is via a brass tube (item 1) in the side of the carburetter body to a needle valve assembly (item 3).

The jet is pressed into the top of an aluminium tube which is in turn pressed into a plastic moulding (item 8). This hollow moulding known as the jet head is open at its lower end allowing fuel to enter the jet tube.

Mixture adjustment (see Fig. U29)
The jet tube of the HIF type carburetter is moved in the vertical plane to provide mixture adjustment.

The jet adjustment assembly is comprised of a right-angled adjusting lever of unequal length arms riveted to a bi-metal blade (item 6).

The blade is cut out to accept the jet head (item 8) and the shape of the jet head is formed so that any movement of the bi-metal blade is transmitted to the jet head, moving it in the vertical plane.

The right-angled adjusting lever and bi-metal blade (item 6) are attached to the body casting by a spring-loaded retaining screw (item 5) positioned in the short arm of the lever. This attachment allows the adjusting lever to be pivoted at the outer edge of its short arm and is loaded by the spring towards the jet adjusting screw (item 4).

The jet adjusting screw is located at the outer end of the long arm of the adjusting lever; screwing the adjusting screw inward will lower the jet, enriching the mixture and unscrewing the adjusting screw will allow the spring to return the lever together with the jet, weakening the mixture.

After the mixture has been set the jet adjustment can be sealed by fitting a plug into the jet adjusting screw recess of the carburetter body.

HIF7 carburetters are set and balanced by accurate flow measuring techniques during manufacture and therefore, adjustment of the mixture screws should not be necessary.

Fuel temperature compensation (Viscosity compensator) (see Fig. U29)
This device alters the jet position in relation to the metering needle to compensate for changes in fuel viscosity which take place with changes in fuel temperature.

When the fuel temperature rises, the viscosity is lowered, and in an uncompensated assembly this would allow more fuel to flow for a given jet/needle relationship.

In the HIF jet assembly the jet head is attached to a bi-metal blade (item 6). This bi-metal is immersed in the fuel in the float chamber and will move in the vertical plane in response to changes in fuel temperature. The jet will be raised to a weaker position on the jet needle when the fuel

temperature rises and will be lowered to a richer position when the temperature falls.

From this it will be seen that once the jet position has been selected by adjusting the mixture screw, alterations of fuel temperature will bring about slight alterations in jet position to compensate for the change in fuel viscosity.

The effect of this device is that drivability is improved over wide ranges of temperature, and that exhaust emissions can be kept within closer limits during cold starting and the warm-up period. Temperature compensation also allows carburetters to have the mixture setting pre-set and sealed before the car is delivered.

Overrun valves (see Fig. U30)

During overrun (i.e. when decelerating with the throttles closed), insufficient mixture is supplied to the engine to maintain satisfactory combustion. The overrun valves alleviate this condition by allowing some mixture to pass through the throttle plates (butterflies) at high inlet manifold depressions.

An overrun valve is fitted into the throttle plate of each carburetter.

An overrun valve consists of a small disc retained in each throttle plate by a spring loaded plunger. Under normal conditions the disc is seated against the throttle plate. When the throttle is suddenly closed, the increased inlet manifold depression lifts the disc from its seating and allows a metered quantity of air/fuel mixture to pass through the throttle plate.

The action of the overrun valves maintains satisfactory combustion on overrun, thus reducing hydrocarbon emissions and controlling catalyst temperatures.

After the sudden closure of the throttles and as soon as the manifold depression falls, the overrun valve disc returns to its seat on the throttle plate.

Spring-loaded jet needle (see Fig. U31)

The jet needle fitted to each carburetter is biased towards a predetermined position in the jet orifice by means of a spring-loaded fixing.

The shoulder of the needle abuts a protrusion formed on the needle guide. Under the pressure of a spring the needle is held permanently in one position relative to the air flow. As the needle is retained in a predetermined position no jet centring is required and a non-centreable jet bearing is fitted. To ensure correct fitting the needle guide carries an etched alignment mark which should be positioned mid-way between the two cut-outs in the piston.

Carburetter fuel filter

A filter element is fitted into the fuel filter housing attached to the side of each carburetter. At the intervals specified in the Service Schedules these two filter elements should be discarded and new ones fitted as described in Chapter K.

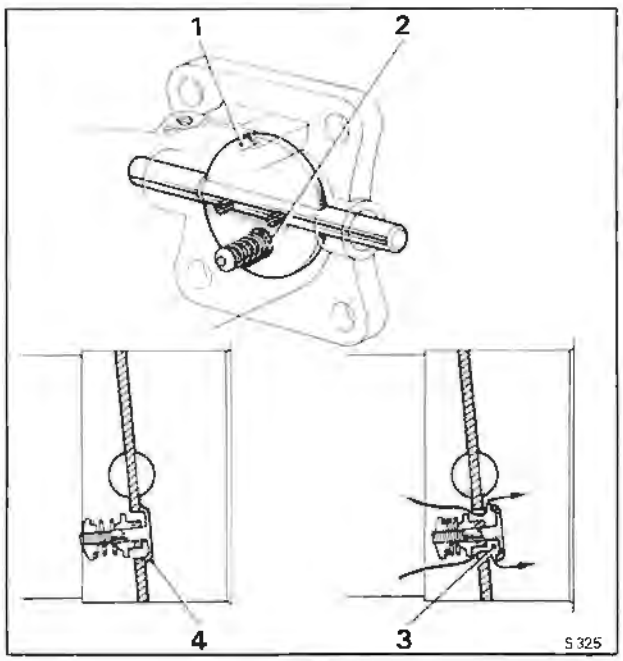

Fig. U30 Overrun valve
1 Throttle butterfly disc
2 Overrun valve
3 Overrun valve open
4 Overrun valve closed

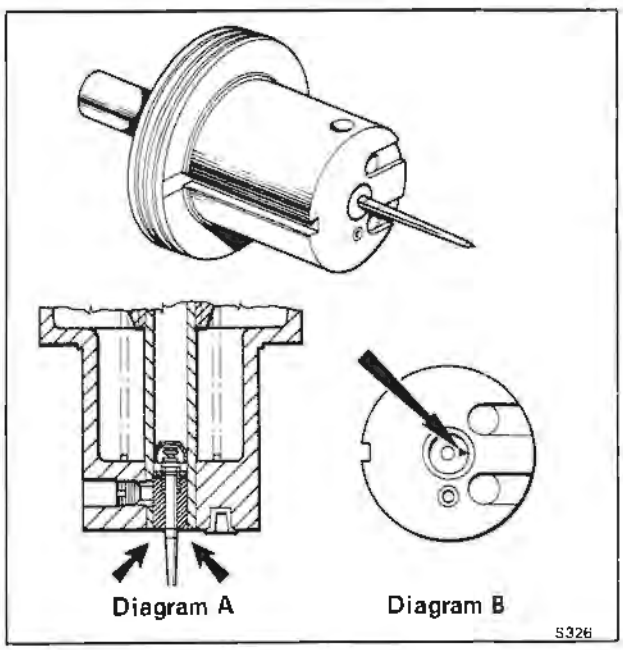

Fig. U31 Spring-loaded jet needle
Diagram A
Needle guide height setting
Diagram B
Needle guide alignment setting

Printed in England
© Rolls-Royce Motors Limited 1978
January 1978
P.S.D. 4200 Japan)

Carburetters and air horns assembly - To remove
Before commencing to remove the carburetters observe the following points.
1. When disconnecting the various hoses, pipes and wiring connections ensure that they are suitably labelled to assist identification when assembling.
2. Ensure that **all** open ends of pipes, hoses, etc. are suitably blanked off to prevent the ingress of dirt, etc.
3. Ensure that the usual safety precautions are carried out (i.e. parking brake firmly applied, gear range selector lever in Park, battery disconnected, etc.).

To remove the carburetter and air horn assembly proceed as follows
From 'A' bank side
1. Remove the air intake elbow casting (refer to Air intake - To remove in Chapter K).
2. Disconnect the fuel feed and recirculation pipes adjacent to 'A' bank carburetter.
3. Withdraw the 'Lucar' electrical connections from the E.G.R. full throttle cut-out micro-switch.
4. Withdraw the 'Lucar' electrical connections from the speed control unit. Disconnect the chain link from the throttle linkage to the speed control unit. Withdraw the vacuum hose from the speed control unit. Unscrew and remove the 'steady' bolt from the speed control bracket.
5. Remove the split pin, washer and clevis pin from the throttle linkage just forward of 'A' bank carburetter.

From 'B' bank side
6. Disconnect the E.G.R. feed pipe upper joint (refer to E.G.R. feed pipe - To remove, Section U2).
7. Unscrew the union on the choke stove pipe at the bi-metal housing.
8. Unscrew the fuel feed pipe union at 'B' bank carburetter filter housing.
9. Remove the crankcase emission control system pipe from the choke butterfly housing; withdraw the housing from the end of the pipe.
10. Disconnect the electrical cables to the choke solenoid at the 'snap connector' joints, adjacent to the butterfly housing.
11. Disconnect the 'Lucar' electrical connections to the anti run-on solenoid, E.G.R. cut-off solenoid and the weakening device cut-off solenoid.
12. Detach the following hoses from the weakening device.
a. the hose from the float chamber vent valve
b. the hose from the fuel receiver
c. the hose to the air filter
d. the hose from the venturi chamber
These hoses are labelled A, H, G and D in Figure U4.
13. Disconnect the purge line at the restrictor.
14. Unscrew the 7/16 in. A/F nut from the dipstick bracket; collect the washer.
15. Unscrew the ½ in. A/F setscrew from the centre of the carburetter 'tee' piece; withdraw the setscrew and washer.
16. Carefully withdraw the carburetters and air horn assembly, ensuring that no pipes, hoses or electrical items are still connected.

Carburetters and air horns assembly - To fit
Fit the carburetters by reversing the procedure given for their removal, noting the following points.
1. Ensure that all joint faces are clean.
2. Fit new gaskets.

Carburetters - To remove
Remove the carburetters and air horn assembly from the car (refer to Carburetters and air assembly - To remove) and then, remove the carburetters from the air horns assembly as follows.

'A' bank carburetter
1. Unscrew the two ½ in. A/F nuts securing the air horn to 'A' bank carburetter.
2. Withdraw the bolts, collect the washers and the E.G.R. full throttle cut-out micro-switch mounting bracket.
3. Move the air horn flange upwards away from the carburetter.
4. Unscrew the union from the fuel filter.
5. Detach the vacuum supply hose from on top of the carburetter body adjacent to the carburetter and 'tee' piece flange.
6. Detach the hose from the side of the carburetter that connects to the fuel receiver in the weakening device.
7. Completely remove the two pinch bolts securing the throttle levers to the 'A' and 'B' bank carburetter butterfly spindles, remove the levers.
8. Unscrew the nut and withdraw the pinch bolt securing the 'fast-idle' lever to the carburetter spindle; withdraw the lever.
9. Unscrew the four half-nuts that retain the carburetter to the 'tee' piece flange; collect the washers.
10. Withdraw the carburetter and collect the gasket.

'B' bank carburetter
1. With a screwdriver, unscrew and remove the two screws securing the solenoid platform in position adjacent to 'B' bank carburetter. One screw is located on the air horn and has a nut underneath, and the other screw is situated in the filter housing.
2. Unscrew the ½ in. A/F nuts from the bolts that retain the air horn to the carburetter flange; withdraw the bolts and collect the washers. Move the solenoid platform away from the carburetter.
3. Detach the hose from the side of the carburetter to the fuel receiver in the weakening device.
4. Carefully ease the air horn upwards away from the carburetter.

5. Completely remove the two pinch bolts securing the throttle levers to the 'A' and 'B' bank carburetter butterfly spindles remove the levers.
6. Detach the vacuum supply hose from on top of the carburetter body adjacent to the carburetter and 'tee' piece flange.
7. Unscrew the remaining union from the fuel filter housing.
8. Unscrew the four half-nuts that retain the carburetter to the 'tee' piece flange; collect the washers.
9. Withdraw the carburetter and collect the gasket.

Dismantling of the components within the carburetters is not recommended as all cerburetters are set and balanced by accurate flow measuring techniques during manufacture.

In certain isolated instances however, it maybe necessary to dismantle the carburetters and under these conditions the following procedure should be carefully followed.

Carburetter - To dismantle
Upper half (see Fig. U32)
1. Thoroughly clean the outside of the carburetter.
2. Unscrew the suction chamber retaining screws and remove the identity tag.
3. Lift the chamber assembly vertically from the body without tilting it.
4. Hold the piston firmly and pull the suction chamber, taking care not to bend the damper rod, until the damper retainer is freed from the piston rod. Unscrew and remove the damper.
5. Remove the piston spring, lift out the piston assembly and empty the oil from the piston rod.
6. Note the position of the needle guide etch mark in relation to the piston transfer holes for correct reassembly and unscrew the needle guide locking screw.
7. Withdraw the needle, guide and spring.

Lower half (see Fig. U33)
8. Mark the bottom cover-plate and body to ensure correct reassembly, unscrew the retaining screws and remove the cover complete with the sealing ring.
9. Remove the jet adjusting screw complete with 'O' ring.
10. Remove the jet adjusting lever retaining screw and spring.
11. Withdraw the jet complete with adjusting lever and disengage the lever.
12. Remove the float pivot spindle and aluminium washer.
13. Withdraw the float.
14. Remove the needle valve and unscrew the valve seat.
15. Unscrew the jet bearing locking nut and withdraw the bearing complete with fibre washer.

Throttle disc assembly (see Fig. U34)
16. Remove the throttle disc retaining screws.
17. Close the throttle and mark the position of the throttle disc in relation to the carburetter flange. **Do not mark the disc in the vicinity of the overrun valve.** Open the throttle and carefully withdraw the disc from the throttle spindle taking care not to damage the overrun valve.
18. Withdraw the throttle spindle and remove the seals, noting the way it is fitted in relation to the carburetter body to ensure correct reassembly.

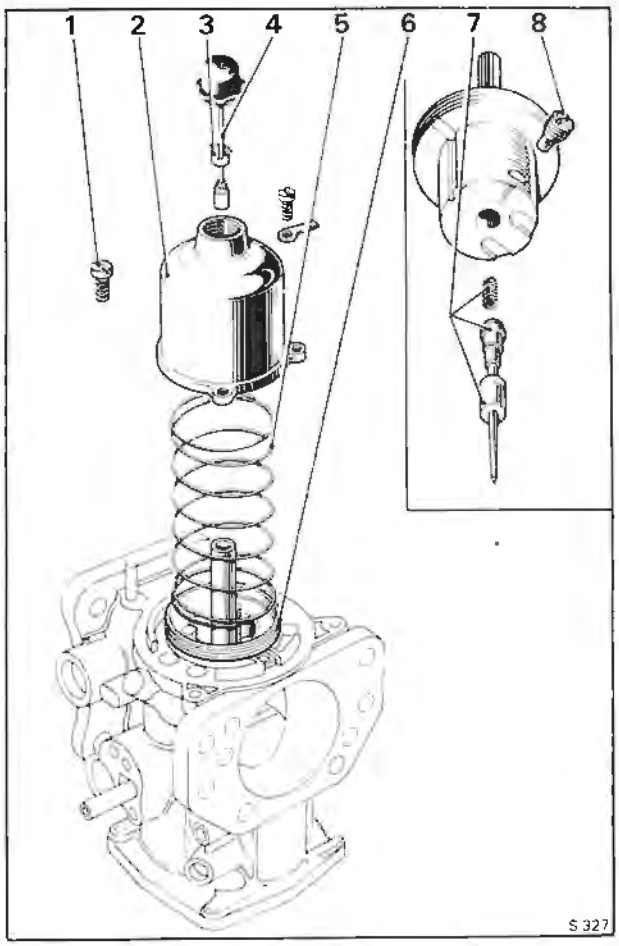

Fig. U32 Dismantling a carburetter (Upper half)
1 Suction chamber retaining screw
2 Suction chamber
3 Damper retainer (Piston ball race clip)
4 Damper rod
5 Spring
6 Piston
7 Spring-loaded needle assembly
8 Needle guide locking screw

Printed in England
© Rolls-Royce Motors Limited 1978
January 1978
T.S.D. 4200 (Japan)

Carburetter - To inspect

1. Examine the throttle spindle and its bearings in the carburetter body, check for excessive play, and fit new parts if necessary.
2. Examine the float needle and seating for damage and excessive wear; fit new parts if necessary.
3. Examine all rubber seals and 'O' rings for damage or deterioration; fit new parts if necessary. **The cover-plate sealing ring must be renewed.**

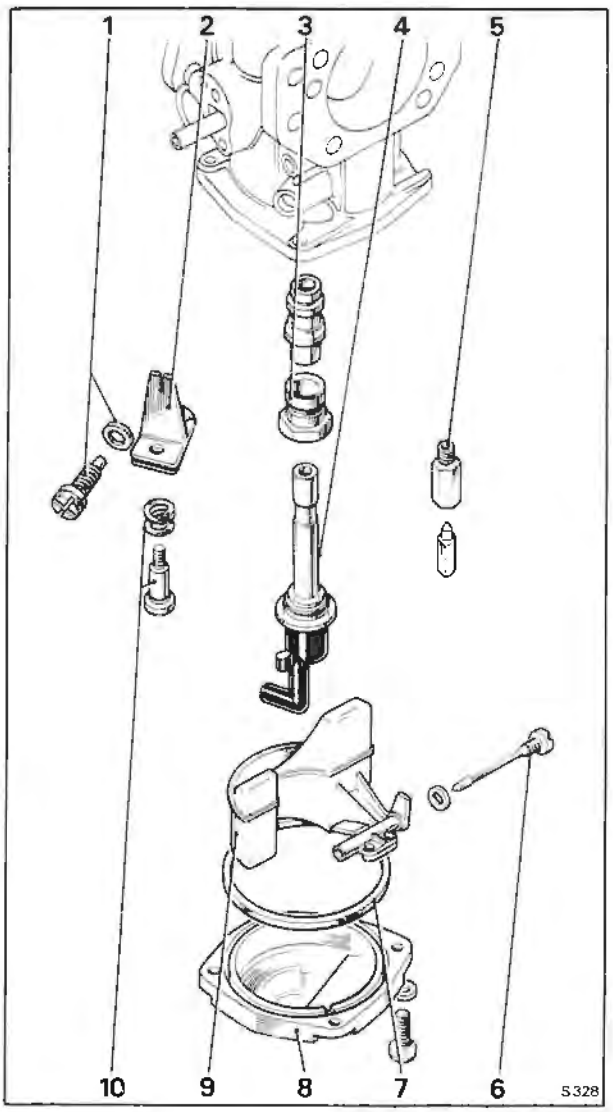

Fig. U33 Dismantling a carburetter (Lower half)

1 Jet adjusting screw and 'O' ring
2 Jet adjusting lever
3 Jet bearing assembly
4 Jet
5 Float chamber needle valve
6 Float pivot spindle
7 Sealing ring
8 Bottom cover plate
9 Float
10 Jet lever adjusting screw

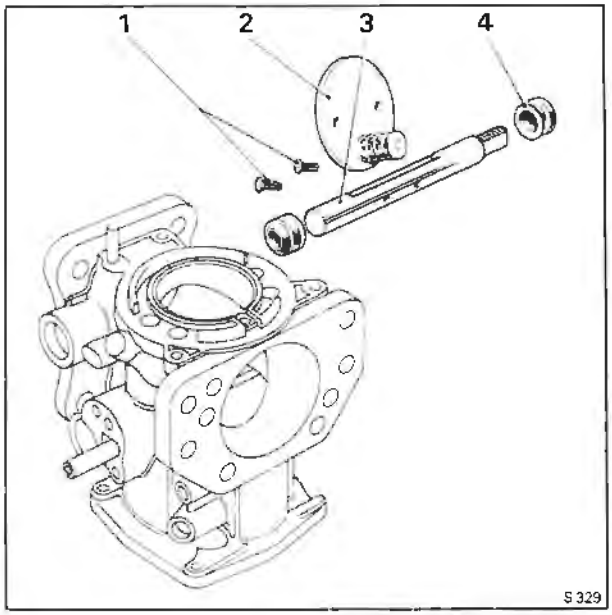

Fig. U34 Dismantling a carburetter (Throttle disc assembly)

1 Throttle disc retaining screws
2 Throttle disc assembly
3 Throttle spindle
4 Seal

4. Examine the carburetter body for cracks and damage and for security of the brass connections and the piston key.
5. Clean the inside of the suction chamber and piston rod guide with fuel or methylated spirit (denatured alcohol) and wipe dry. **Abrasives must not be used.**
6. Examine the suction chamber and piston for damage and signs of scoring.
7. Check that all the balls are in the piston ball race (2 rows, 6 per row). Fit the piston into the suction chamber, without the damper and spring, hold the assembly in a horizontal position and spin the piston. The piston should spin freely in the suction chamber without any tendency to stick.

Carburetter - To assemble

Assemble the carburetter by reversing the procedure given for removal, noting the following points.

1. Ensure that the throttle disc is fitted in its original position.
2. New throttle disc retaining screws must be used when refitting the disc. Ensure that the throttle disc is correctly positioned and closes correctly before tightening the retaining screws. Spread the split ends of the screws sufficiently to prevent turning.
3. Position the throttle spindle end seals just below the spindle housing flange.
4. When fitting the jet assembly to the adjusting lever ensure that the jet head moves freely in the bi-metal cut-out.

5. Fit a new float pivot spindle sealing washer or anneal the existing washer.

Check the level of the float in the float chamber (refer to Carburetter float level - To set).

6. Check that the small diameter of the jet adjusting screw engages the slot in the adjusting lever and set the jet 3,05 mm. (0.12 in.) below the bridge of the body.

7. Ensure that the needle guide etch mark aligns correctly with the piston transfer holes. After fitting the needle assembly, check that the shoulder of the guide aligns with the face of the piston (see Fig. U31).

8. To prevent the piston spring from being 'wound up' during reassembly, temporarily fit the piston and suction chamber, less the piston spring, to the body and pencil mark their relative positions to each other. Fit the spring to the piston, hold the suction chamber above the piston, align the pencil marks and lower the chamber over the spring and piston.

Before assembly ensure that the damper retainer (piston ball race clip) is refitted by pressing it fully into the piston rod (see Fig. U35).

The damper retainer (piston ball race clip) can also be installed with the suction chamber fitted to the engine by using fitting tool RH 9086.

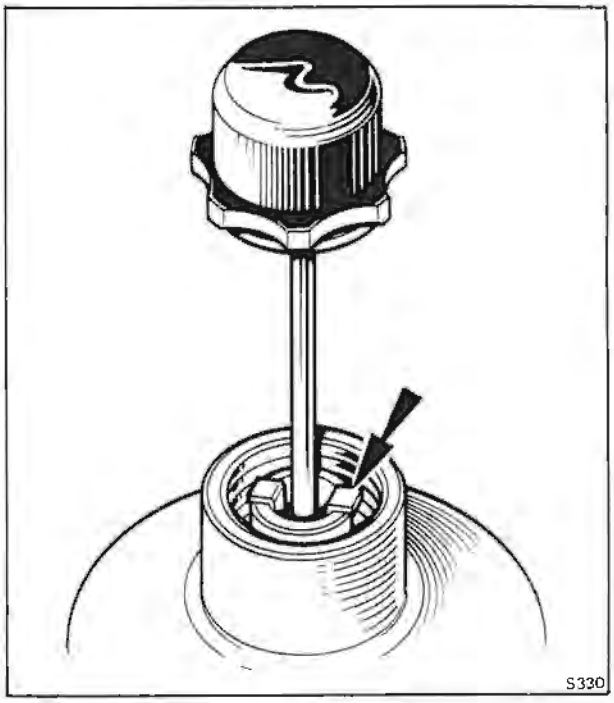

Fig. U35 Position of damper retainer

Carburetter float level - To set

1. Remove the carburetter from the engine.
2. Invert the carburetter.
3. Mark the bottom cover-plate and carburetter to ensure correct assembly, unscrew the retaining screws and remove the cover complete with the sealing ring.

A new rubber sealing ring must be installed when fitting the cover-plate.

4. Ensure that the float chamber needle valve is held in the closed position by the weight of the float only.
5. Check that the lowest point on the float (see Fig. U36) is either level with the float chamber face, or up to 1,52 mm. (0.060 in.) below.
6. If necessary, adjust the float position by carefully bending the brass pad.
7. Check that the float pivots correctly about the spindle.

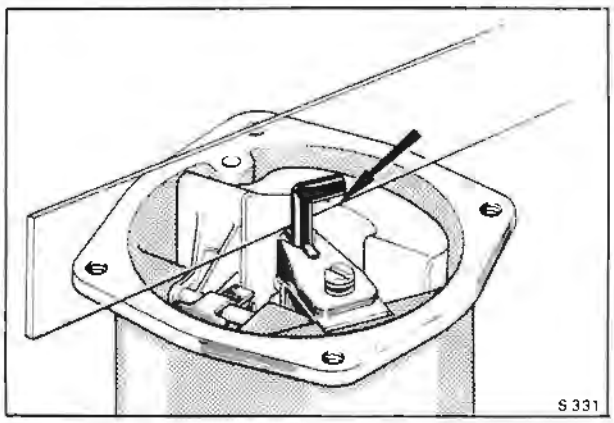

Fig. U36 Checking the float level

Carburetter air valve damper - To top-up

The upper portion of the guide spindle, attached to the air valve piston in each carburetter, is hollow and is filled with the same type of oil as used in the engine.

1. Unscrew the damper cap and carefully raise the damper until the damper, **together with the air valve piston,** reach the top of their travel. Ensure that the retainer is not displaced from its position in the piston rod (see Fig. U35).
2. Holding the damper and piston in the raised position; fill the recess in the damper retainer (piston ball race clip) with clean engine oil.
3. Lower the damper until the cap contacts the neck of the suction chamber, then carefully raise the damper and piston again and check the oil level; this is correct if the oil level is just visible in the bottom of the recess in the damper retainer (piston ball race clip). If the oil level is not visible, repeat the topping-up procedure until the oil level is correct.
4. Check that the damper retainer (piston ball race clip) is still in its correct position in the piston rod as shown in Figure U35, then lower the damper and screw the damper cap firmly into position.

Printed in England
© Rolls-Royce Motors Limited 1978
January 1978
T.S.D. 4200 (Japan)

If the damper retainer (piston ball race clip) becomes inadvertently displaced during the topping-up procedure or if the damper should be removed from the piston, do not fit the damper cap or run the engine until the retainer has been returned to its correct position in the piston rod. The special tool RH 9086 should be used to fit damper retainer (piston ball race clip).

Carburetter throttle linkage - To fit and set (see Fig. U37)

1. Assemble 'A' bank and 'B' bank throttle levers (items 7 and 11) onto the carburetter spindles.
2. Fit the setting jig (RH 8880) into position on the throttle levers.
3. Fully close 'B' bank carburetter butterfly (item 8).
4. Tighten the pinch bolt securing 'B' bank throttle lever.
5. Fully close 'A' bank carburetter butterfly (item 2).
6. Tighten the pinch bolt securing 'A' bank throttle lever.
7. Fit the throttle spring (item 5) to the throttle levers.
8. Remove the setting jig from the throttle levers.
9. Fit the cross link guide bracket (item 10) to the carburetter 'tee' piece (item 6). Secure in position with two small screws which should be 'locked' using two tabs washers.
10. Fit the cross link (item 9) and the eccentric throttle adjuster (item 4) onto the throttle levers, ensuring that both throttle butterflies are closed when adjusting and tightening the eccentric adjuster.
Note
The eccentric pin should be set in the lowest position possible.
11. Ensure that the cross link guide (item 10) has a clearance of between 1,27 mm. (0.050 in.) and 1,78 mm. (0.070 in.) with the cross link. If necessary bend the guide to give these clearances.
12. Check that the throttle linkage moves freely.
13. Fit the idle stop screw (item 3) and lock nut; adjust until the screw just contacts the stop bracket with the throttle butterflies remaining in the closed throttle position.
14. Screw down the idle stop screw ½ turn.
15. Connect one end of the drive link (item 1) to the 'B' bank throttle lever and the other end, to the manifold shaft lever (item 13).
16. Operate the linkage to ensure free movement.
17. With the throttles in the closed position check that the relationship between the 'A' bank control shaft to control rod lever (item 12) on the rear of the manifold shaft and the front manifold shaft lever (item 13) is as illustrated in Figure U37. Tighten the securing bolts on both levers.
18. Operate the mechanism; check for freedom of movement within the linkage and also clearance with the various engine components.
19. To set the remainder of the linkage from the control rod lever on the rear of the manifold shaft to the accelerator pedal refer to Chapter T - Transmission.

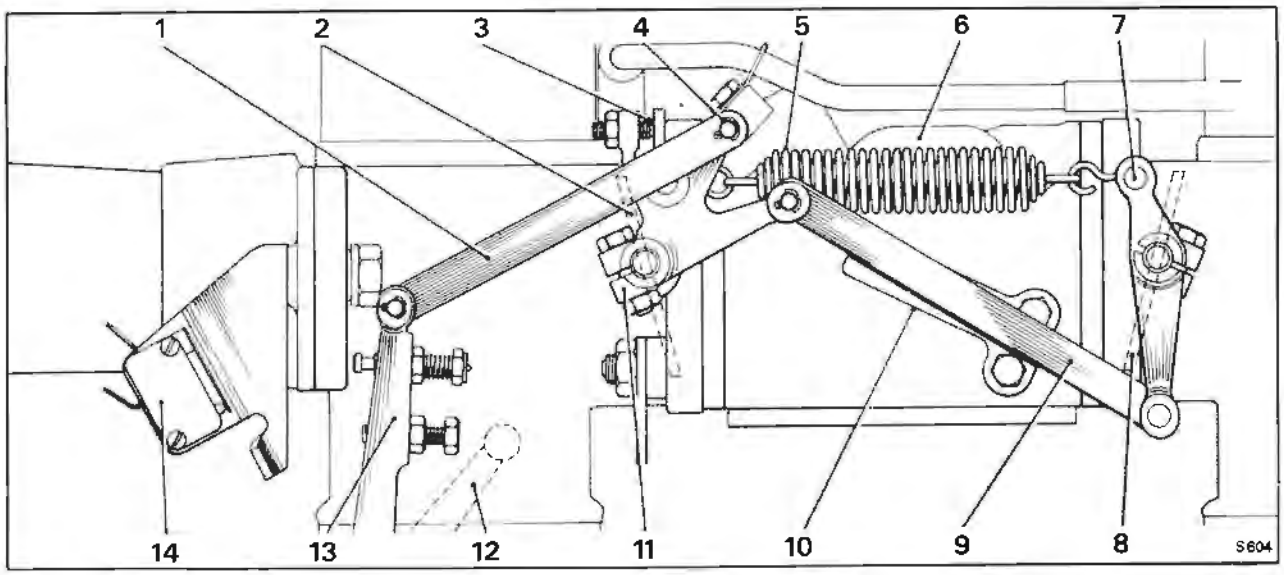

Fig. U37 Carburetter throttle linkage

1	Drive link
2	'A' bank carburetter throttle butterfly
3	Idle stop screw
4	Eccentric throttle adjuster
5	Throttle spring
6	Carburetter 'tee' piece
7	'B' bank carburetter throttle lever
8	'B' bank carburetter throttle butterfly
9	Cross link
10	Throttle cross link guide bracket
11	'A' bank carburetter throttle lever
12	Rear manifold shaft lever
13	Front manifold shaft lever
14	E.G.R. full throttle cut-out micro-switch

Printed in England
© Rolls-Royce Motors Limited 1978
January 1978
T.S.D. 4200 (Japan)

Carburetters - To set

The carburetters fitted to these cars are adjusted at the factory using **special equipment** to ensure that their settings comply with the current emission control regulations.

Under normal circumstances the carburetters should not require adjustment in service.

If however adjustment is found necessary due to inadvertent disturbance or replacement of a component set the carburetters by carrying out the following operations in the sequence given.

a. Set throttle linkage and temporarily set engine idle speed. Check linkage clearances.
b. Set cold start fast-idle cam.
c. Tune carburetters.
d. Set cold start fast-idle speed.
e. Set the kick-down micro-switch.
f. Set full throttle stop and full throttle E.G.R. cut-off micro-switch.

Carburetter tuning

Preliminary checks

Before tuning the carburetters the following checks should be carried out.

Ensure that the vehicle is in 'Park', the parking brake firmly applied and that the gear range actuator thermal cut-off has been removed from the main fusebox.

1. Check the condition of the spark plugs.
2. Check the ignition timing.
3. Check the flow through the choke stove pipe.
4. Check the entire induction system for air leaks.
5. Check the purge line flow rate.
6. Ensure that the air conditioning system is switched off.
7. Start the engine and warm up; allow to run for at least 5 minutes after the thermostat has opened.
8. Stop the engine, ensure that the choke butterfly valve is fully open and the choke fast-idle off.
9. Connect an electric impulse tachometer in accordance with manufacturer's instructions.
10. Check the float chamber depression.
11. Check the exhaust gas recirculation system for correct operation.
12. Check and set the full throttle exhaust gas recirculation cut-out micro-switch.

Carburetter idle air balance

1. Ensure that the usual safety precautions are carried out (i.e. parking brake firmly applied, gear range selector lever in Park, etc.) and connect an impulse tachometer in accordance with the manufacturer's instructions.
2. Disconnect the speed control chain.
3. Start and run the engine until normal operating temperature is attained.
4. Stop the engine.
5. Fit the dial gauges RH 9105 with RH 8841 (kit to convert dial gauges to fit the HIF7 carburetters) to the carburetter dashpots in place of the dampers.
6. Zero the gauges with the engine stopped and lightly tighten the gauge clamp screws.
7. Start and run the engine at the idle speed setting (650 r.p.m.), adjust the carburetter piston lifts to be equal (within 10%) using the eccentric adjuster (see Fig. U37).
8. The average piston lift reading should now be between 2,03 mm. and 2,54 mm. (0.080 in. and 0.100 in.).

If the idle speed piston lift is over 2,54 mm. (0.100 in.) check the ignition timing at idle as this condition may result in unsatisfactory driveability.

9. Stop the engine and remove the impulse tachometer.
10. Remove the dial gauges and fit the carburetter dampers. **Ensure that the dashpot ball race clips (piston damper retainers) are fitted correctly and are pressed fully into the piston rod (see Fig. U35) using tool RH 9086.**
11. Connect the speed control chain and adjust to give a minimum slack condition, consistant with no impediment to the throttle lever to return to the idle speed position.

Carburetter mixture strength - To set

1. Ensure that the usual safety precautions are carried out (i.e. parking brake firmly applied, gear range selector lever in Park, etc.) and connect an impulse tachometer in accordance with the manufacturer's instructions.
2. Remove the air intake, blank off the hot idle compensator feed drilling (see Fig. U38) and replace the intake.

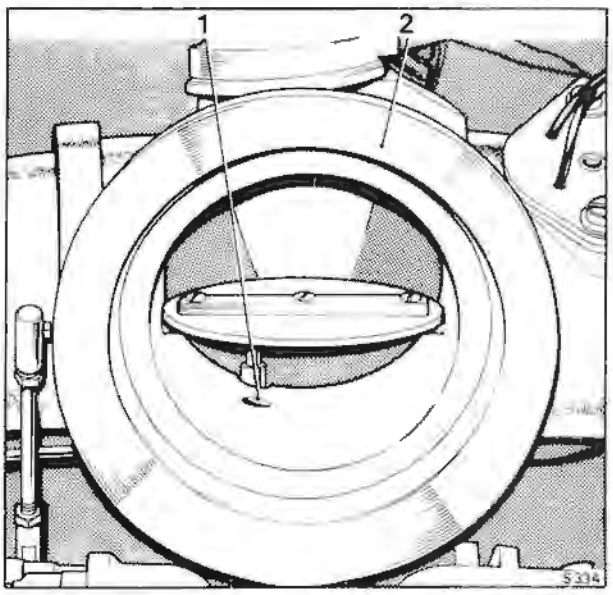

Fig. U38 Hot idle mixture compensator feed
1 Hot idle compensator feed
2 Air intake butterfly housing

3. Remove the air inlet hose from the air injection system pressure relief valve and fit a blank over the valve (a suitable blank may be produced from a short length of rubber hose with one end plugged).

Note
The air injection system is inoperative when the relief valve inlet air hose is disconnected from the air pump. The valve must be blanked to prevent air being drawn into the exhaust port by pulsations in the exhaust system since this would affect the idle CO reading.

4. Disconnect the E.G.R. cut-off solenoid to carburetter signal hose at the solenoid, blank off the hose.
5. Unscrew and remove the pressure tapping cap from the weakening device.
6. Ensure that the engine has run for at least 25 minutes after the thermostat has opened.
7. Purge the engine at 2 000 r.p.m. in Neutral for ¼ minute. Allow the engine speed to return to the idle setting and ensure that this is 650 r.p.m.; adjust if necessary using the idle stop screw.
8. Insert the probe of a CO meter into either exhaust system tailpipe and check the reading.

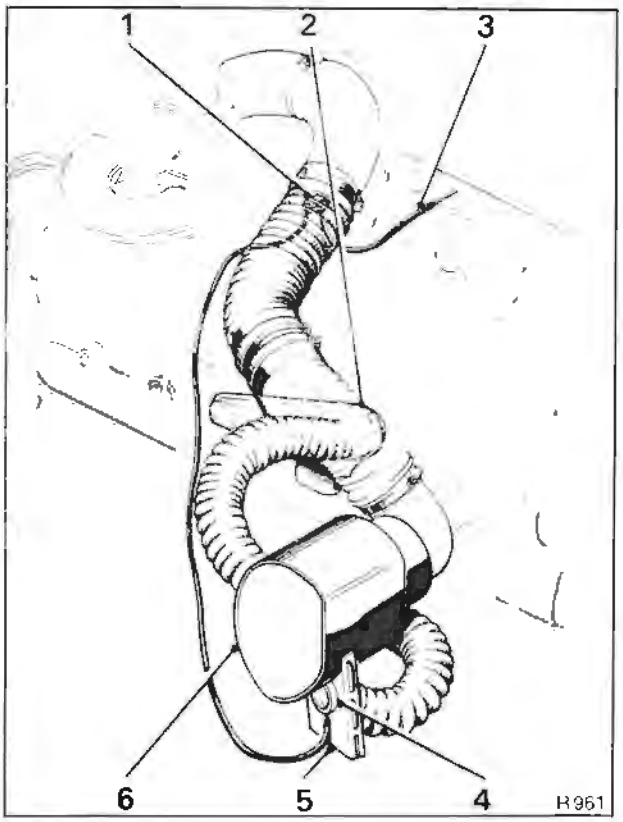

Fig. U39 Temperature controlled air intake
1 Temperature sensor
2 Hot air scoop
3 Manifold vacuum hose
4 Air blend valve
5 Cold air intake
6 Air cleaner/silencer

9. The CO meter reading should be 1% to 4%. If the reading is outside the limits quoted
a. Check for induction system leaks (if below 1%)
b. Check the choke stove and purge line flow rates.
10. If after carrying out Operation 8 the idle speed CO meter reading is still outside the limits quoted, the carburetter mixture screws (see Fig. U29) may be adjusted by equal amounts up to ½ turn in the same direction in order to achieve the mean limit of 2.5%. No attempt should be made to adjust the CO reading if it is in the region of 2.5% to 4.0%.

Note
a. Clockwise rotation of the mixture screws will richen the mixture.
b. The tuning operations should be carried out in the shortest possible time. If the time exceeds 3 minutes, run the engine at 2 000 r.p.m. in Neutral for ¼ minute and then resume the tuning operations. Repeat this purging operation if a further period of 3 minutes is exceeded.

After purging the system gently tap all around the neck of the carburetter suction chamber with a lightweight non-metallic object (i.e. the wooden handle of a small screwdriver), to eliminate carburetter piston hysteresis. The engine is to be run on Indolene Clear (HO) reference fuel or equivalent (Unleaded gasoline only).

11. Stop the engine.
12. Fit the pressure tapping cap to the weakening device, fit a new sealing washer if necessary.
13. Remove the blank from the air pressure relief valve and connect the feed hose from the air pump to the relief valve.
14. Remove the blank from the E.G.R. cut-off solenoid to carburetter signal hose and connect the hose to the E.G.R. cut-off solenoid.
15. Start the engine and check the idle speed, this should be 650 r.p.m.; adjust by means of the idle stop screw (refer to Section U6).
16. Stop the engine, remove the air intake and discard the blank from the hot idle compensator feed drilling; fit the air intake.
17. Remove the impulse tachometer.

Carburetter tamperproofing
Both carburetter mixture screws **must** have tamper-proof caps fitted upon completion of the setting operation.

Special tools have been designed and produced for the fitting of the tamperproof caps as follows.
'A' bank carburetter mixture screw cap - RH 9096
'B' bank carburetter mixture screw cap - RH 9097

Temperature controlled air intake

To ensure rapid warm-up and improve control of the air/fuel ratio a temperature controlled air intake is fitted (see Fig. U39).

A vacuum operated blending valve attached to the air cleaner assembly is controlled by a thermal sensor in the air intake elbow. This valve blends hot

air from a pick-up point (scoop) adjacent to the exhaust manifold with cold air from under the front wing; thus maintaining a constant temperature of the intake air as it enters the carburetters.

All other details for the Temperature Controlled Air Intake System are given in Chapter K except for the checking procedure which is as follows.

Temperature controlled air intake - To check

1. Disconnect the air intake hose at the intake elbow and check that the correct temperature sensor is fitted, this should be colour coded white.
2. Disconnect both vacuum hoses of the temperature sensor.
3. Place the open ends of both hoses together and check that there is no obvious air leak. Detach the open ends of the hoses from each other (i.e. release the vacuum sharply) and listen for the vacuum motor within the wing to 'click' open.
4. Reconnect the hoses.

Note

If there is an air leak or the operation of the temperature controlled air intake is suspect, remove the right-hand front underwing sheet and check the hose connection to the vacuum motor; also observe the operation of the temperature flap.

Printed in England
© Rolls-Royce Motors Limited 1978

Section U6

Ignition system

Data

Ignition timing	9° B.T.D.C. (Static) 15° B.T.D.C. at 1 200 r.p.m. 7° - 13° B.T.D.C. at idle speed (650 r.p.m.) (Approach 1 200 r.p.m. from a higher speed).

Ignition control system

The ignition system utilises an Opus distributor (in which an oscillator pick-up and control unit replace the conventional contact breaker), a high load ignition coil and a ballast resistor. The control unit comprises an electronic oscillator, amplifier and power transistor.

A drum with eight ferrite rods (one per cylinder) moulded into the outer edge is mounted onto the distributor drive-shaft. As the drum rotates a voltage is created each time a ferrite rod passes the oscillator pick-up, this signal is then amplified and used to switch-off the normally conducting power transistor in the primary coil circuit thus inducing a high voltage in the secondary winding which is distributed to the sparking plugs in the normal manner.

The distributor has a conventional centrifugal advance mechanism.

The Opus distributor provides increased accuracy of timing and increased service life before maintenance is required.

For the removal and fitting instructions of the ignition system components refer to Chapter M.

Ignition - To time (using a stroboscope)

The ignition is timed on A1 cylinder which is located at the front left-hand side of the engine (viewed from the front of the car).

Note

If the ignition timing is to be set, ensure that the sparking plugs are in good condition before running the engine; if they require cleaning or renewal the sparking plugs gap should be set to 0,9 mm. (0.035 in.).

1. To check the ignition timing commence by running the engine until normal operating temperature is attained and the choke 'fast-idle' is in the off position. Switch off the engine.
2. Connect a stroboscope and a tachometer to the engine as described in the instructions supplied with the respective equipment.
3. Start the engine and adjust the throttle stop screw to give an idle speed of 1 200 r.p.m. When setting the engine idle speed reduce from a higher speed to 1 200 r.p.m.
4. Direct the flashing light of the stroboscope onto the crankshaft damper timing marks and timing pointer; the pointer is positioned on the right-hand side of the crankshaft damper when viewed from the front of the engine.
5. If the timing pointer does not coincide with the 15° B.T.D.C. mark on the crankshaft damper adjust the ignition timing as follows.
6. Release the clamp screw on the distributor and rotate the head of the distributor in the appropriate direction until the correct timing is obtained. Clockwise rotation of the distributor head advances the ignition and conversely anti-clockwise rotation retards the ignition. After adjustment has been carried out tighten the clamp screw and again check to ensure that the timing has not altered whilst tightening the clamp screw.
7. Set the engine idle speed to 650 r.p.m.
8. Direct the flashing light of the stroboscope onto the crankshaft damper timing marks and timing pointer. Check that the ignition timing is approximately 7° - 13° B.T.D.C.
9. Stop the engine and remove all the test equipment.

Setting the engine idle speed

Ensure that the engine is at normal operating temperature and that the choke 'fast-idle' is in the off position.

The air conditioning system must be switched off and a tachometer connected to the engine in accordance with the manufacturer's instructions.

1. Stop the engine, remove the air intake and blank off the hot idle compensator feed drilling (see Fig. U38); replace the air intake.
2. Start the engine and, if necessary, adjust the engine idle speed to 650 r.p.m. using the throttle stop screw.
3. Stop the engine and remove the air intake. Remove the blank from the hot idle compensator feed drilling and fit the air intake. Detach the tachometer and stroboscopic timing equipment.

Distributor maintenance

The distributor requires no routine maintenance except that, at the mileage intervals specified in the Service Schedules, the moulded cover and H.T. rotor arm should be removed and the spindle shaft bearings lubricated by inserting a few drops of

Printed in England

© Rolls-Royce Motors Limited 1979

November 1979

T.S.D. 4200
(Japan 1978 Model year)

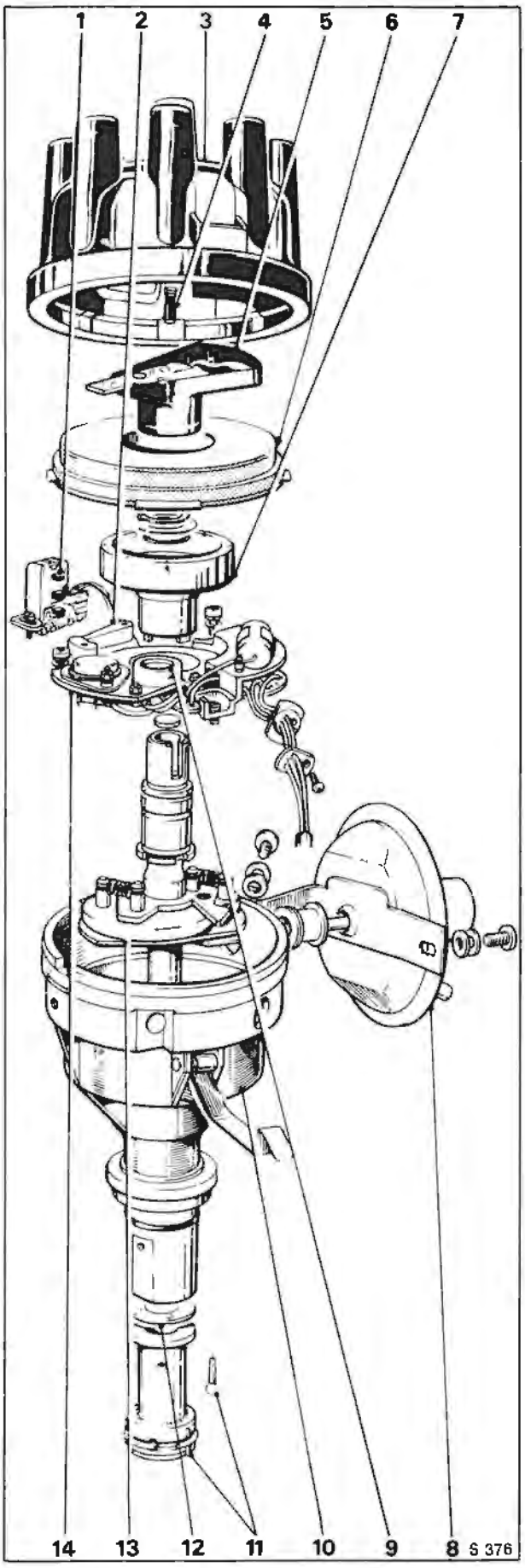

engine oil onto the felt pad. The automatic advance mechanism should also be lubricated at this time with a few drops of engine oil inserted through apertures in the base plate.

Sparking plugs

The sparking plugs approved for this car are Champion RN 14Y. Before fitting the plugs, set the gaps with the aid of a feeler gauge to 0,9 mm. (0.035 in.) and lightly smear the threads with 'Graphogen' grease.

Fig. U36 Ignition distributor

1 Pick-up module
2 Pick-up arm
3 Distributor cover (cap)
4 High tension brush and spring
5 Rotor arm
6 Flash over shield (dust cover)
7 Timing rotor
8 Vacuum advance unit (not connected)
9 Control unit
10 Distributor body
11 Driving dog and pin
12 Thrust washer
13 Automatic advance mechanism
14 Electronic module assembly

Section U7

Electrical components

The electrical components described in this section would normally appear in Chapter M - Electrical System, however, as they are only used in connection with the emission control system it is thought more practical to include the information in this Chapter.

The components concerned are as follows.

E.G.R. system and weakening system lock-out switch
E.G.R. system cut-off solenoid
Anti 'run-on' solenoid
Weakening system cut-off solenoid
Full throttle E.G.R. cut-off micro-switch
Catalytic converter and body floor overheat warning system

E.G.R. system and weakening system lock-out switch

The bi-metal lock-out switch is situated in the side of the air intake elbow adjacent to the choke stove take-off pipe and 'B' bank carburetter (see Fig. U41).

E.G.R. system and weakening system lock-out switch - To remove

1. Withdraw the protective sheath and detach the electrical connections, noting the position of the connections to assist identification when assembling.
2. Unscrew and remove the three setscrews and spring washers.
3. Withdraw the lock-out switch.

E.G.R. system and weakening system lock-out switch - To fit

Fit the lock-out switch by reversing the procedure given for removal.

1. Ensure that the gasket is in a good condition.
2. The setscrews must be fitted with spring washers.
3. The protective sheath must be fitted over the electrical connections.

E.G.R. system and weakening system lock-out switch circuit wiring - To check

1. Detach the 9 White/Blue cable from the weakening system lock-out switch.
2. Fit one side of a test lamp to the 9 White/Blue cable and the other side to a good earth.
3. Switch on the ignition noting that the test lamp bulb illuminates.
4. Switch off the ignition noting that the test lamp bulb extinguishes.

E.G.R. system and weakening system lock-out switch - To check

1. Withdraw the protective sheath from the electrical connections.
2. Do not disturb any wiring but connect both electrical connections via a test lamp.
3. Ensure that the engine is cold i.e. intake air temperature below approximately 14°C. (57°F.) and switch on the ignition.
4. Check that the test lamp bulb is illuminated.
5. Start and run the engine; as the engine warms up i.e. the inlet air temperature exceeds approximately 14°C. (57°F.) the test lamp bulb should extinguish.

E.G.R. system cut-off solenoid

This assembly is situated rearmost of the three solenoid assemblies mounted on a platform, adjacent to the 'B' bank carburetter (see Figs. U4 and U41).

E.G.R. system cut-off solenoid - To remove

1. Detach the electrical connections, noting the position of the connections to assist identification when assembling.
2. Detach the rubber hose from either side of the solenoid.
3. Unscrew the two cheese-headed' mounting screws and withdraw the solenoid.

E.G.R. system cut-off solenoid - To fit

Fit the cut-off solenoid by reversing the procedure given for removal.

E.G.R. system cut-off solenoid circuit wiring - To check

1. Disconnect the 9 White and 14 White/Green cables at the solenoid 'Lucar' connections.
2. Connect a test lamp across the two disconnected cables (in place of the solenoid).
3. Ensure that the engine is cold i.e. intake air temperature is below 14°C(57°F).
4. Switch on the ignition and note that the bulb of the test lamp is illuminated.
5. Start and run the engine, as the engine warms up, i.e. the inlet air temperature exceeds approximately 14°C(57°F) the test lamp bulb should extinguish.
6. Depress the full throttle cut-out micro-switch plunger and check to ensure that the test lamp bulb illuminates. Release the plunger and the test lamp bulb should extinguish.

Printed in England
© Rolls-Royce Motors Limited 1978
January 1978
T.S.D. 4200
(Japan)

E.G.R. system cut-off solenoid - To check

1. Detach the carburetter vacuum signal to E.G.R. cut-off solenoid hose at the solenoid and blank off the hose.

Connect a suitable length of hose to the solenoid connection.

2. Clean the open end of the additional hose.
3. Switch on the ignition.
4. Place the hose in the mouth and apply suction.
5. If the operation of the solenoid is correct note that the following conditions apply.

a. With an engine air intake temperature of below approximately 14°C. (57°F.) blowing air through the hose **should not** be possible.

b. With an engine air intake temperature of above approximately 14°C. (57°F.) blowing air through the hose **should** be possible.

c. As the engine air intake temperature falls to 12°C. (54°F.) the conditions described in (a) should again apply.

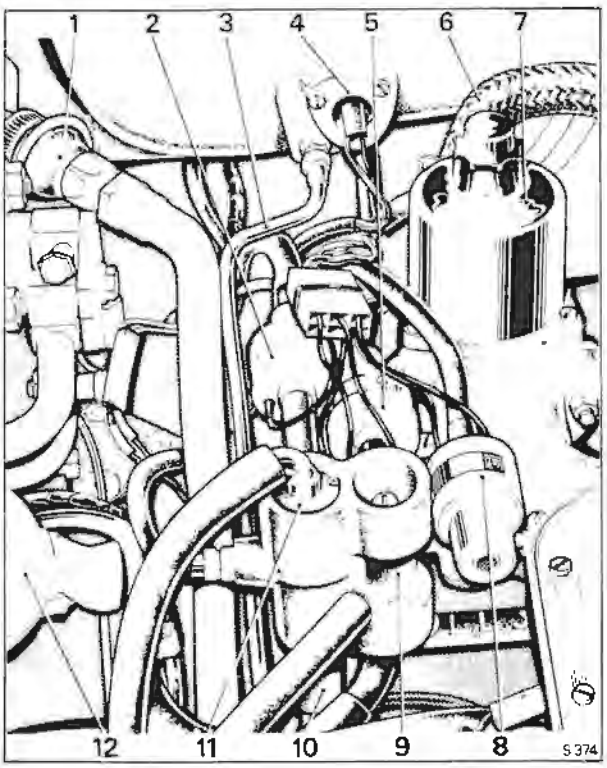

Fig. U41 Solenoid platform

1	Check valve
2	Anti 'run-on' solenoid
3	Choke stove pipe
4	Weakening device and E.G.R. lock-out switch
5	Weakening device cut-off solenoid
6	Exhaust gas distribution pipe
7	'B' bank carburetter
8	E.G.R. cut-off solenoid
9	Mixture weakening device
10	Fuel receiver
11	Float chamber vent valve
12	Engine oil filler cap

6. If the operation of the solenoid is suspect, fit a new unit.

Anti 'run-on' solenoid

The anti 'run on' solenoid is situated on a platform adjacent to 'B' bank carburetter, it is the foremost of the three solenoids fitted on the platform.

The use of low octane fuel often causes an engine to 'diesel' (i.e. to continue to run-on after the ignition has been switched off, particularly when the engine is hot). To prevent this an anti 'run-on' solenoid is fitted between the fuel receiver and the induction manifold (see Figs. U4 and U41). When the ignition is switched off the solenoid valve opens and connects the weakening system to the induction manifold, thus creating a high depression in the float chambers which cuts off the fuel supply.

Anti 'run-on' solenoid - To remove

1. Disconnect the rubber hose from either side of the solenoid.
2. Disconnect the two electrical leads at their 'Lucar' connections.
3. Unscrew and remove the two screws situated one on either side of the solenoid body.
4. Withdraw the anti 'run-on' solenoid.

Anti 'run-on' solenoid - To fit

Fit the anti 'run-on' solenoid by reversing the procedure given for removal.

Anti 'run-on' solenoid circuit wiring - To check

1. Connect a test lamp across the two 'Lucar' connections to the solenoid. **Do not disconnect the two connections.**
2. Switch on the ignition and check that the test lamp bulb illuminates.
3. Switch off the ignition and check that the test lamp bulb is extinguished.

Anti 'run-on' solenoid - To check

1. Ensure that the usual safety precautions are carried out (i.e. parking brake firmly applied, gear range selector lever in Park, etc.).
2. Connect an impulse tachometer in accordance with the manufacturer's instructions.
3. Detach the weakening device pressure tapping cap (see Fig. U24) and connect a manometer capable of reading 0 to 15,5 cm. (0 to 6 in.) of water to the tapping.
4. Disconnect the carburetter vacuum signal to E.G.R. cut-off solenoid hose at the solenoid. Blank off the hose.
5. Start and run the engine at the idle speed setting (650 r.p.m.).
6. Switch off the engine and observe the reading on the manometer. The reading should momentarily increase to approximately 15,5 cm. (6.0 in.) as the engine stops.

7. If the reading does not increase, the operation of the anti 'run-on' solenoid is incorrect.

This could be caused by the following.

a. A blockage in the hose (see Fig. U24) from the anti 'run-on' solenoid to the weakening device.

b. A blockage in the hose (see Fig. U24) from the anti 'run-on' solenoid to the vacuum manifold or in the vacuum manifold.

c. Incorrect wiring to the anti 'run on' solenoid.

d. Faulty anti 'run-on' solenoid.

Weakening system cut-off solenoid

The weakening device cut-off solenoid is the central of the three solenoids mounted on the platform adjacent to 'B' bank carburetter (see Figs. U4 and U41).

Weakening system cut-off solenoid - To remove

1. Detach the electrical connections, noting the position of the connections to assist identification when assembling.
2. Detach the rubber hose from either side of the solenoid.
3. Unscrew the two 'cheese-headed' mounting screws and withdraw the solenoid.

Weakening system cut-off solenoid - To fit

Fit the cut-off solenoid by reversing the procedure given for removal.

Weakening system cut-off solenoid circuit wiring - To check

1. Connect a test lamp across the two 'Lucar' connections to the solenoid. **Do not disconnect the two connections.**
2. Ensure the engine is cold.
3. Switch on the ignition and start the engine noting that the bulb of the test lamp is illuminated.
4. Run the engine, noting that as the engine warms-up the inlet air temperature reaches approximately 14°C. (57°F.) the test lamp bulb should extinguish.
5. Stop the engine and allow to cool, noting that when the engine becomes cold the air in the intake drops to a temperature of approximately 12°C. (54°F.) the test lamp bulb again illuminates.

Weakening system cut-off solenoid - To check

1. Detach the carburetter vacuum signal to weakening system cut-off solenoid hose at the solenoid and blank off the hose.

Connect a suitable length of hose to the solenoid connection.

2. Clean the open end of the additional hose.
3. Switch on the ignition.
4. Place the hose in the mouth and apply pressure.
5. If the operation of the solenoid is correct note that the following conditions apply.

a. With a cold engine i.e. the inlet air temperature below approximately 14°C. (57°F.) blowing air through the hose **should not** be possible.

b. As the engine warms up i.e. an inlet air temperature of approximately 14°C. (57°F.) or above blowing air through the hose **should** be possible.

c. As the engine again cools i.e. the inlet air temperature drops below approximately 12°C. (54°F.) the conditions described in (a) should again apply.

Full throttle E.G.R. cut-off micro-switch

The full throttle E.G.R. cut-off micro-switch is mounted on a bracket which is attached to the forward side of 'A' bank carburetter. The micro-switch is operated by a plunger fitted to the throttle linkage (see Fig. U43).

Full throttle E.G.R. cut-off micro-switch - To remove

1. Detach the two 'Lucar' connections adjacent to the micro-switch.
2. Unscrew the two retaining setscrews and withdraw the micro-switch.

Full throttle E.G.R. cut-off micro-switch - To fit

Fit the full throttle E.G.R. cut-off micro-switch by reversing the procedure given for removal noting the following point.

1. After fitting the micro-switch ensure that it is correctly set.

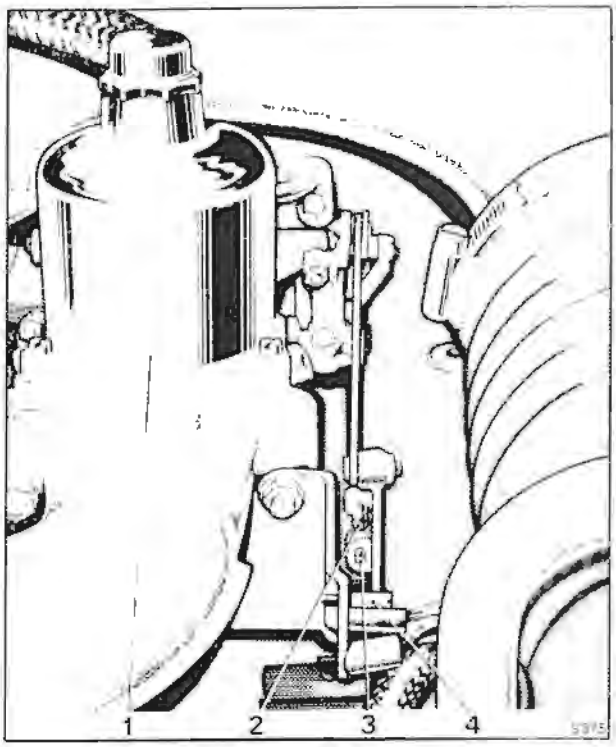

Fig. U43 Full throttle E.G.R. cut-out micro-switch

1 'A' bank carburetter
2 Micro-switch operating plunger
3 Full throttle stop
4 Cut-out micro-switch

Printed in England
© Rolls-Royce Motors Limited 1978
January 1978
T.S.D. 4200 (Japan)

Full throttle E.G.R. cut-off micro-switch circuit wiring - To check

1. Disconnect the 9 White and 14 White/Green cables at the E.G.R. system cut-off solenoid 'Lucar' connections.
2. Connect a test lamp across the two disconnected cables (in place of the solenoid).
3. Detach the two 'Lucar' connections from the full throttle E.G.R. cut-off micro-switch and connect a suitable switch across the cable connection (in place of the micro-switch).
4. Ensure that the engine is cold.
5. Switch on the ignition and note that the test lamp bulb is illuminated.
6. Start and run the engine, as the engine coolant temperature exceeds approximately 14°C. (57°F.) the test lamp bulb should extinguish.
7. Switch on (make the contacts) the switch that has replaced the micro-switch, noting that the test lamp bulb illuminates.

Full throttle E.G.R. cut-off micro-switch - To set

1. It is important to ensure that the engine throttle linkage (refer to Section U5 and Chapter T) and the kick-down micro-switch (refer to Chapter T) are correctly set.
2. Depress the accelerator pedal until it just touches the toeboard mounted kick-down switch (further depression of the pedal requires increased effort).

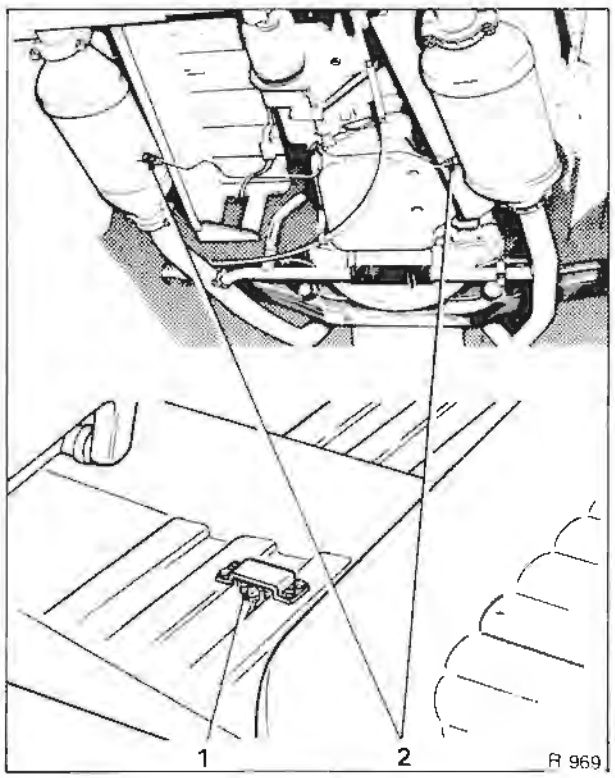

Fig. U43 Exhaust overheat sensors
1 Overheat sensor - floor area
2 Overheat sensors - catalytic converters

3. Hold the accelerator in this position.
4. Release the lock-nut and screw the spring loaded operating button (see Fig. U42) away from the E.G.R. full throttle cut-out micro-switch.
5. Screw the spring loaded operating button towards the micro-switch until the micro-switch is heard to 'click'. Secure the lock-nut.
6. Depress the accelerator to operate the toeboard kick-down micro-switch and then set the full throttle stop (see Fig. U42) to prevent overloading of the micro-switch.
7. The full throttle stop should be set so that the throttle movement is stopped just before the full spring travel of the micro-switch spring loaded operating button is reached.

Full throttle E.G.R. cut-off micro-switch - To check

To check the full throttle E.G.R. cut-off micro-switch carry out the instructions given in E.G.R. system cut-off solenoid circuit wiring - To check, noting in particular Operation 6.

Catalytic converter and body floor overheat warning system

To satisfy Japanese regulations a warning system is fitted to both the exhaust catalytic converters and car body floor to alert the driver if temperatures in these two areas become excessive.

The sensors are shown in Figure U43.

Both warning systems utilise the same feed of the catalyst control unit (mounted under the front left-hand wing above the under wing sheet) and warning lamp situated on the facia.

If the temperature of either the catalytic converters or the car floor become excessive the warning lamp will illuminate.

Overheat warning lamp

To check that the warning lamp bulb is operating satisfactorily, ensure that the red coloured warning lamp situated between the four in one instrument gauge and speedometer, directly below the main beam warning lamp, illuminates just prior to the engine starting but is extinguished immediately the engine starts.

Overheat warning

Should an exhaust overheat condition be signalled the speed of the vehicle must be reduced to 50 k.p.h. (30 m.p.h.) immediately and this speed must not be exceeded until the cause of the overheat warning has been investigated and corrected.

Before carrying out a full diagnostic inspection ensure that the vehicle did not run out of fuel.

If the overheat warning lamp illuminates for reasons other than the above, a fault has occurred in:

a. The various systems that lead into the exhaust (i.e. fuel system, air injection system, etc.) or in the exhaust itself particularly the catalytic converter. Any faults in these areas can be determined as system faults.

b. The overheat warning circuit (i.e. faulty converter thermocouple (sensor), wiring, connections, etc.) causing the lamp to illuminate although the system is operating satisfactorily. These faults can be determined as **circuit faults.**

Further conditions may apply when investigating possible faults with the overheat warning system, as follows:

a. The car has been returned with the warning lamp illuminated.

b. The car has been returned for investigation when the warning lamp has been illuminated, but **is not illuminated at the time of** the investigation.

Warning lamp illuminated

1. Ensure that the normal safety precautions (i.e. parking brake is firmly applied, etc.) are carried out and the ignition is switched on.

2. Carefully observe if the vehicle appears **exceptionally hot** particularly in the area of the catalytic converters. If hotter than is usual for a car fitted with catalysts suspect a **system fault.**

3. Raise the car bonnet, locate the Lucar connections for the catalyst converter thermocouples (sensors) and disconnect each brown cable in turn. The connections are situated adjacent to the front left-hand road spring pot cover and the valance. The brown and blue cables, together with the control box loom enter the engine compartment from under the front wing (see Fig. U45).

4a. If the warning lamp extinguishes a **system fault** can be suspected, proceed to Operation 5.

b. If the warning lamp continues to be illuminated a **circuit fault** can be suspected, proceed to Operation 5.

After Operation **4** connect the brown cables to their respective connections.

5. Open the left-hand rear door and carefully pull the carpet and felt from the floor to determine if the metal floor in the area of the sensor is hot (see Fig. U43).

Note

The floor temperature in this area could be extremely high and therefore, care must be taken when carrying out this test to avoid personal injury.

6a. If the car floor is very hot a **system fault** could be causing excessively high temperatures in the exhaust.

b. If the car floor is cool or warm proceed to Operation 7.

7. Remove the metal cover fitted over the car floor sensor and disconnect one of the Lucar connections to the sensor. If the warning lamp extinguishes the sensor should be tested (see Service Checks – car floor temperature sensor) and if found suspect in anyway, renewed.

8. If the warning lamp continues to be illuminated refit all components.

9. Position the car on a ramp and carry out Operation 1.

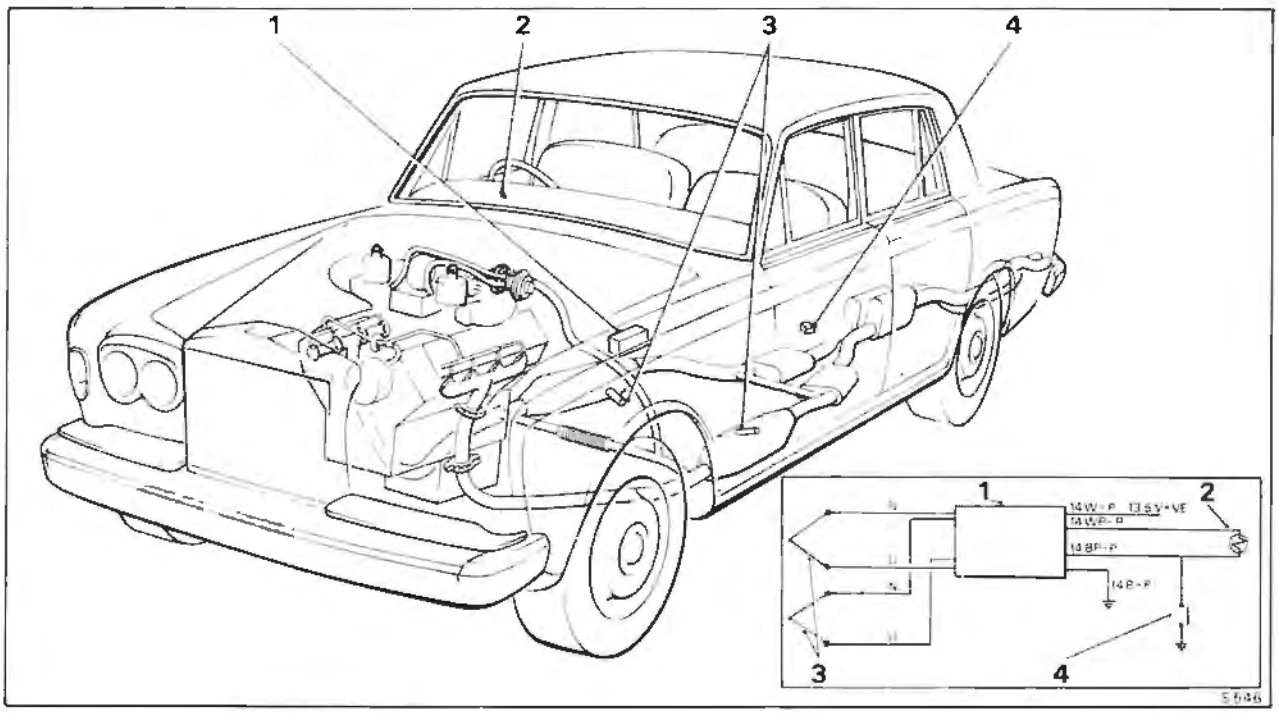

Fig. U44 Overheat warning system

1 Control unit
2 Warning lamp
3 Catalyst thermocouple probe
4 Car floor temperature sensor

Printed in England
© Rolls-Royce Motors Limited 1978
January 1978
T.S.D. 4200 (Japan)

10. From beneath the car, carefully observe the area around the catalyst converter assemblies. The catalytic converters and surrounding area will normally be very hot, however, excessive temperature caused by a **system fault** will result in the overheat warning lamp illuminating.
11. Switch off the ignition and allow the car to cool down. When the car is cold switch on the ignition and check the warning lamp as follows.
a. If the warning lamp is still illuminated suspect a **warning circuit** fault and check out the circuits as detailed in the service checks.
b. If the warning lamp is not illuminated suspect a fault in one of the systems feeding into the exhaust (**system fault**).

From the evidence gained by carrying out Operations 1 to 11 inclusive it can be determined if the vehicle has a **system fault** or a **warning circuit fault** and the information listed in the appropriate section should be consulted.

Warning lamp not illuminated at the time of investigation
1. Ensure that the normal safety precautions (i.e. handbrake or parking brake is firmly applied, etc.) are carried out and the ignition is switched on.
2. Raise the car bonnet and carry out service checks on the **catalytic converter thermocouple** and **control box.**
3. Carry out the service checks on the **floor overheat warning system** wiring and switch.

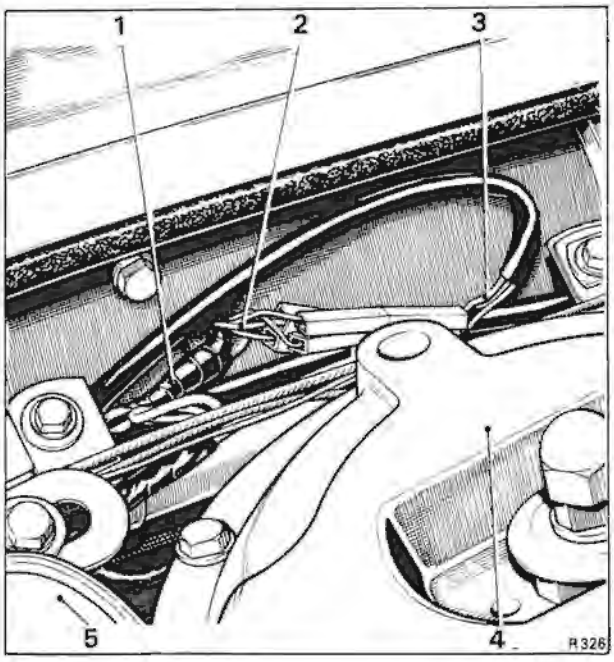

Fig. U45 Catalytic converter thermocouple probe cables and control box loom
1 Control box loom
2 Catalyst thermocouple cables (blue)
3 Catalyst thermocouple cables (brown)
4 Left-hand front road spring cover
5 Hydraulic systems reservoirs

4. If all the service checks on the warning circuits prove satisfactory a **system fault** should be suspected.

From the evidence gained by carrying out Operations 1 to 4 inclusive it can be determined if the vehicle has a **system fault** or a **warning circuit fault** and the information listed in the appropriate section should be consulted.

System faults
The following is a list of components and systems that may contribute to a malfunction in the exhaust resulting in overheating of the catalytic converter or the car floor.

Note
Any condition resulting in an engine misfire or uneven running should always be investigated first as this condition could result in the catalytic converter overheating.

1. Faulty air injection system.
2. Faulty air pressure relief valve.
3. Ignition system faulty (including ignition timing).
4. Fouled sparking plugs.
5. Incorrect float chamber depression.
6. Incorrect purge flow rate.
7. Blocked fuel feed line.
8. Fouled float chamber filters.
9. Choke system operation incorrect (including choke hold solenoid).
10. Sticking carburetter piston.
11. Fouled carburetter float chamber or jet.
12. Exhaust gas recirculation valves failed.
13. Air leak into induction system.
14. Failed exhaust gas recirculation cut-in solenoid, cut-in switch or electrical supply circuit.
15. Failed anti 'run-on' solenoid or electrical supply circuit.
16. Faulty hot idle mixture compensator.
17. Weakening device filter blocked or blockage in rubber connecting hoses.
18. Flooding of carburetter float chamber or jet.
19. Incorrect operation of temperature controlled air intake system.

Note
Should the overheat warning lamp illuminate while testing is in progress, disconnect and blank off the air injection system check valves. This action should prevent overheating of the catalyst whilst the remaining tests are completed.

Warning circuit faults
The following is a list of components within the overheat warning system that may contribute to a malfunction of the warning system.

A theoretical wiring diagram of the warning circuits is illustrated in Figure U44.
1. Catalyst overheat warning control box and wiring.
2. Warning lamp.
3. Catalyst thermocouple probes and wiring.

4. Car floor temperature sensor and wiring.
These components together with the necessary wiring and connections can be checked by carrying out the relevant service checks.

Service checks

Catalyst overheat warning control box and lamp - To check

1. Raise the car bonnet, locate the control box loom and the catalyst thermocouple cables on the left-hand valance adjacent to the front road spring pot cover (see Fig. U45).
2. Identify the two sets of catalyst thermocouple cables, each set has one brown and one blue cable.
3. In turn, disconnect each blue cable at its Lucar connection and connect the end from the control box through a 9 k resistor to Positive (this can be the white wire in the control box loom).
4. Switch on the ignition, if the control and wiring is correct the warning lamp will illuminate.
5. Remake the electrical connections.

Catalyst thermocouple probe - To check

1. Raise the car bonnet, locate the control box loom and the catalyst thermocouple cables on the left-hand valance adjacent to the front road spring pot cover (see Fig. U45).
2. Identify the two sets of catalyst thermocouple cables, each set has one brown and one blue cable.
3. In turn, disconnect each set of cables at their Lucar connections and using suitable equipment (e.g. an Avometer) ensure that the thermocouple probe is not open circuit.
4. Providing the thermocouple probes are not open circuit they are considered serviceable, however, should it be suspect for other reasons a new unit must be fitted.
5. Remake the electrical connections.

Car floor temperature sensor - To check

1. Open the rear left-hand door and pull the carpet and felt from the floor of the car (see Fig. U43).
2. Remove the four screws and withdraw the cover from above the sensor.
3. Detach the two cables from the sensor and using an additional short length of cable, connect the two together. If the warning lamp illuminates, the wiring and warning lamp are satisfactory.
4. Remove the sensor from the car.
5. Using suitable test facilities (e.g. heated oil bath, oven, etc.) ensure that the sensor will operate at 110°C. ± 5°C. (230 F.°±10°F.).
Should the switch operate within the prescribed limits it is satisfactory.
6. Fit the switch and the other components to the car.

Catalyst thermocouple probe - To remove and fit

1. Unclip the thermocouple lead from the side of the catalyst.
2. Unscrew the ⅝in. A/F cap nut and withdraw the thermocouple probe from the catalyst.
3. Disconnect the 'Lucar' connections adjacent to the transmission.
4. Release the lock nuts and free the thermocouple from its mounting at the rear end of the transmission.
5. Fit the thermocouple probe in the reverse order.

Car floor temperature sensor - To remove and fit

Refer to Car floor temperature sensor - To check.

Catalyst overheat warning control box - To remove

1. Ensure that the normal safety precautions (i.e. handbrake or parking brake is firmly applied, etc.) are carried out. Firmly chock the wheels.
2. Raise the front of the car on a jack and position stands beneath the car.
3. Remove the front left-hand road wheel.
4. Remove the underwing sheet.
5. Raise the car bonnet, locate the control box loom and catalyst thermocouple cables on the left-hand valance adjacent to the front road spring pot cover (see Fig. U45).
6. Disconnect the cables mentioned at their Lucar connectors and carefully feed them through the valance.
7. Remove the mounting setscrews and withdraw the control box from beneath the wing.

Catalyst overheat warning control box - To fit

1. Fit the control box by reversing the procedure given for removal, ensuring that the rubber grommet is correctly fitted to the hole in the wing valance and the cables are correctly connected in the engine compartment.

Overheat warning lamp - To remove and fit

The warning lamp is situated between the four in one instrument and the speedometer, directly below the main beam warning lamp on the facia.
1. To gain access to the lamp it will be necessary to remove the facia (see Chapter S).

Printed in England
© Rolls-Royce Motors Limited 1978
January 1978
T.S.D. 4200 (Japan)

Section U8

Fault diagnosis

Symptoms	Possible Cause
1. Engine will not start. (Starter motor operating).	1. (a) Ignition circuit broken. (b) Failed anti 'run-on' solenoid or failure of electrical supply circuit. (c) Ignition system faulty. (d) Damaged or contaminated ignition high tension circuit. (e) Blocked fuel feed line, fouled float chamber filters or fouled fuel recirculation restrictor. (f) Faulty choke bi-metal coil. (g) Choke solenoid inoperative. (h) Faulty choke 'fast-idle' mechanism. (i) Air leak into induction system. (j) Faulty hot idle mixture compensator. (k) Weakening device filter blocked, weakening device air intake non-return valve failed or blockage in rubber connecting hoses. (l) Faulty weakening device cut-off solenoid or failure of electrical supply circuit. (m) Faulty weakening device control switch or failure of electrical supply circuit. (n) Dislodged venturi in weakening device. (o) Flooding of carburetter float chamber or jet. (p) Exhaust gas recirculation valve(s) failed.
2. Engine idles very roughly.	2. (a) Ignition system faulty. (b) Fouled sparking plugs. (c) Damaged or contaminated ignition high tension circuit. (d) Fouled fuel recirculation restrictor. (e) Air leak into induction system. (f) Faulty hot idle compensator. (g) Weakening device filter blocked, weakening device air intake non-return valve failed or blockage in rubber connecting hoses. (h) Badly worn or damaged carburetter control linkage. (i) Flooding of carburetter float chamber or jet. (j) Sticking carburetter piston. (k) Incorrect operation of carburetter jet compensation. (l) Fouled carburetter float chamber or jet. (m) Exhaust gas recirculation valve(s) failed. (n) Incorrect operation of temperature controlled air intake system.
3. Engine stalls.	3. (a) Ignition circuit broken. (b) Failed anti 'run-on' solenoid or failure of electrical supply circuit. (c) Ignition system faulty. (d) Damaged or contaminated ignition high tension circuit.

Printed in England

© Rolls-Royce Motors Limited 1978

January 1978

T.S.D. 4200 (Japan)

Symptoms	Possible Cause
3. Engine stalls (continued)	(e) Blocked fuel feed line, fouled float chamber filters or fouled fuel recirculation restrictor. (f) Air leak into induction system. (g) Faulty hot idle mixture compensator. (h) Weakening device filter blocked, weakening device air intake non-return valve failed or blockage in rubber connecting hoses. (i) Badly worn or damaged carburetter control linkage. (j) Flooding of carburetter float chamber or jet. (k) Sticking carburetter piston. (l) Incorrect operation of carburetter jet compensation. (m) Fouled carburetter float chamber or jet. (n) Exhaust gas recirculation valve(s) failed.
4. (i) Engine shows signs of power loss evident at high speeds and loading. (ii) Engine misfires particularly on hard acceleration from low speed.	4. (a) Ignition system faulty. (b) Fouled sparking plugs. (c) Damaged or contaminated ignition high tension circuit. (d) Blocked fuel feed line or fouled float chamber filters. (e) Choke system operation incorrect (f) Sticking carburetter piston. (g) Fouled carburetter float chamber or jet. (h) Faulty exhaust gas recirculation full throttle cut-out switch or failure of electrical supply circuit. (i) Exhaust gas recirculation valve(s) failed. (j) Failed exhaust gas recirculation valve(s) cut-out solenoid or electrical supply circuit.
5. Engine hesitates or misfires under light load.	5. (a) Failed anti 'run-on' solenoid or failure of electrical supply circuit. (b) Ignition system faulty. (c) Fouled sparking plugs (d) Damaged or contaminated ignition high tension circuit. (e) Blocked fuel feed line or fouled float chamber filters. (f) Air leak into induction system. (g) Faulty hot idle mixture compensator. (h) Weakening device filter blocked, weakening device air intake non-return valve failed or blockage in rubber connecting hoses. (i) Dislodged venturi in weakening device. (j) Flooding of carburetter float chamber or jet. (k) Incorrect operation of carburetter jet compensation. (l) Fouled carburetter float chamber or jet. (m) Exhaust gas recirculation valve(s) failed. (n) Incorrect operation of temperature controlled air intake system.
6. Increase in fuel consumption.	6. (a) Ignition system faulty. (b) Fouled fuel recirculation restrictor. (c) Faulty choke bi-metal coil. (d) Choke system operation incorrect. (e) Air leak into induction system. (f) Faulty hot idle mixture compensator.

Symptoms	Possible Cause
6. Increase in fuel consumption (continued)	(g) Weakening device filter blocked, weakening device air intake non-return valve failed or blockage in rubber connecting hoses. (h) Faulty weakening device cut-off solenoid or failure of electrical supply circuit. (i) Faulty weakening device control switch or failure of electrical supply circuit. (j) Air leak in mixture weakening system. (k) Flooding of carburetter float chamber or jet. (l) Sticking carburetter piston. (m) Incorrect operation of carburetter jet compensation. (n) Incorrect purge flow rate. (o) Exhaust gas recirculation valve(s) failed.
7. Decrease in fuel consumption.	7. (a) Air leak in mixture weakening system. (b) Incorrect operation of carburetter jet compensation. (c) Incorrect purge flow rate. (d) Faulty exhaust gas recirculation temperature control switch or failure of electrical supply circuit. (e) Exhaust gas recirculation valve(s) failed.
8. Engine 'backfires' on overrun.	8. (a) Ignition system faulty. (b) Air leak into induction system. (c) Faulty hot idle mixture compensator. (d) Exhaust gas recirculation valve(s) failed
9. Sudden increase in engine idle speed.	9. (a) Faulty choke 'fast-idle' mechanism (b) Failed carburetter overrun valve.
10. Excessive noise from air injection pump or system.	10. (a) Faulty or damaged air injection pump, relief or check valves, connecting hoses or pipes.

Printed in England
© Rolls-Royce Motors Limited 1978

January 1978
T.S.D. 4200 (Japan)

Section U9

Workshop tools

Tool Number	Description
RH 8090	Pliers - wire hose clips
RH 8725	Flowmeter (rotameter type)
RH 8841	Dial gauge - carburetter piston lift
RH 8880	Setting jig - throttle levers
RH 8945	Connector - choke stove pipe
RH 9086	Fitting tool - carburetter piston ball race clip
RH 9096	Fitting tool - 'A' bank mixture adjusting screw tamperproof seal
RH 9097	Fitting tool - 'B' bank mixture adjusting screw tamperproof seal
RH 9105	Kit - to adapt RH 8841 to fit S.U. HIF 7 carburetters

Printed in England
© Rolls-Royce Motors Limited 1978
January 1978
T.S.D. 4200
(Japan)

Section U10

Running changes

Printed in England
© Rolls-Royce Motors Limited 1978

January 1978
T.S.D. 4200
(Japan)

Chapter U

Emission control systems

Applicable to 1979 model year cars destined for Japan

Section

U1 Introduction
U2 Exhaust emission control system
U3 Fuel evaporative emission control system
U4 Crankcase emission control system
U5 Carburetters and Automatic choke system
U6 Ignition system
U7 Electrical components
U8 Fault diagnosis
U9 Workshop tools
U10 Running changes

Printed in England

© Rolls-Royce Motors Limited 1979

January 1979

TSD 4200
(Japan
1979 Model year)

Chapter U - 1979 Japan

Issue record sheet 1

July 1980

The dates quoted below refer to the issue date of individual pages within this chapter.

Section	U1	U2	U3	U4	U5	U6	U7	U8	U9	U10
Page No.										
1	Jan 79	Jan 79	Jan 79	Jan 79	Jan 79	Feb 80	Jul 80	Jan 79	Jan 79	Jan 79
2	Jan 79	Jan 79	Jan 79		Jan 79	Feb 80	Jul 80	Jan 79		
3	Jan 79	Jan 79	Jan 79		Jan 79		Jan 79	Jan 79		
4	Jan 79	Jan 79	Jan 79		Jan 79		Jan 79			
5		Nov 79	Jan 79		Jan 79		Jan 79			
6		Nov 79	Jan 79		Jan 79		Jan 79			
7		Jan 79	Jan 79		Jan 79		Jan 79			
8		Jan 79	Jan 79		Jan 79					
9					Jan 79					
10					Jan 79					
11					Jan 79					
12					Jan 79					
13					Jan 79					
14										
15										
16										
17										
18										
19										
20										
21										
22										
23										
24										
25										
26										
27										
28										
29										
30										
31										
32										
33										
34										
35										
36										
37										
38										
39										
40										
41										
42										
43										
44										
45										
46										
47										
48										

Printed in England

© Rolls-Royce Motors Limited 1980

Section U1

Introduction

This Chapter has been written specifically for cars fitted with Emission Control Systems conforming to the Japanese emission control regulations, applicable to 1979 model year new motor vehicles.

It is important therefore that Service Personnel fully understand the contents of this Chapter so that the special servicing can be correctly carried out.

Rolls-Royce and Bentley motor cars conforming to the above regulations and produced to the 1979 model year specification can be readily identified as follows.

1. A 1979 date of manufacture plate located on the bulkhead.

Engine compartment

Figures U2 and U3 overleaf show the location of the major emission control system components within the engine compartment.

Hose routing diagram

Figure U4 within the Introduction section gives details of the various hose 'runs' and connections in and around the engine compartment, that are associated with the emission control systems components.

Torque tightening

When fitting the various emission control systems components, ensure that the securing nuts and set-screws are tightened to the torque figures given in Chapter P, unless otherwise stated in this Chapter.

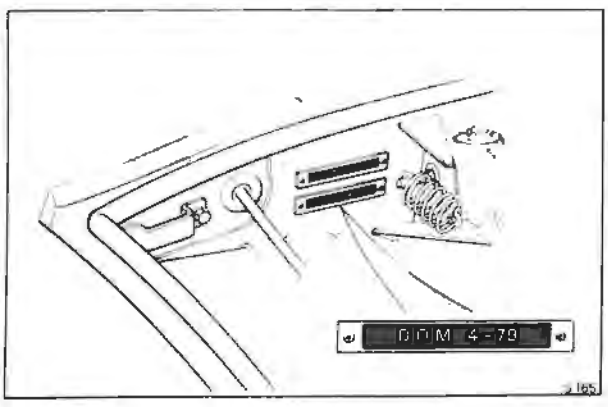

Fig. U1 Date of manufacture plate

Printed in England
© Rolls-Royce Motors Limited 1979

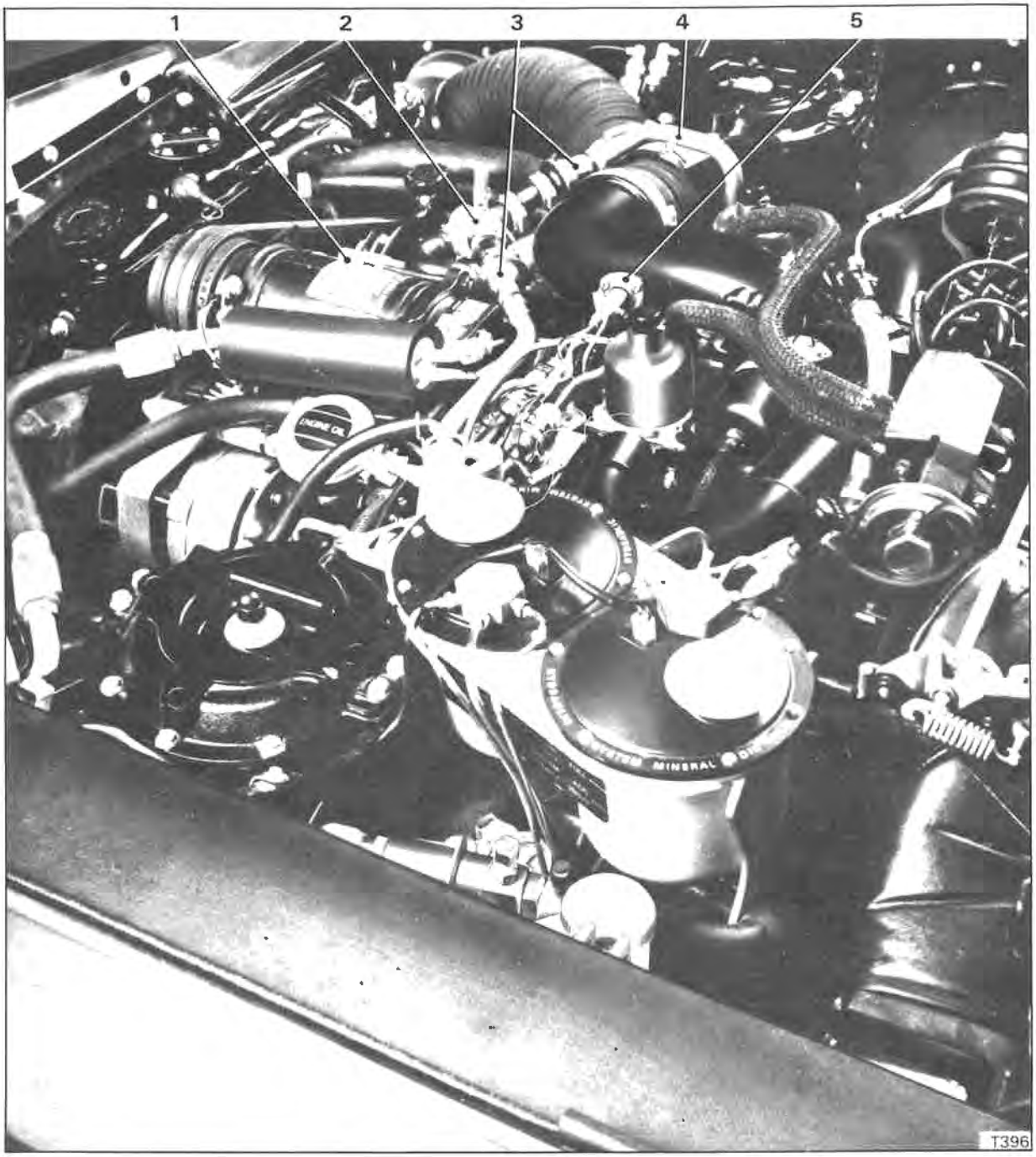

Fig. U2 Engine compartment details (L.H. side)

1 Air pump
2 Connection block and relief valve
3 Check valves
4 'A' bank air manifold
5 Weakening and E.G.R. systems cut-out switch

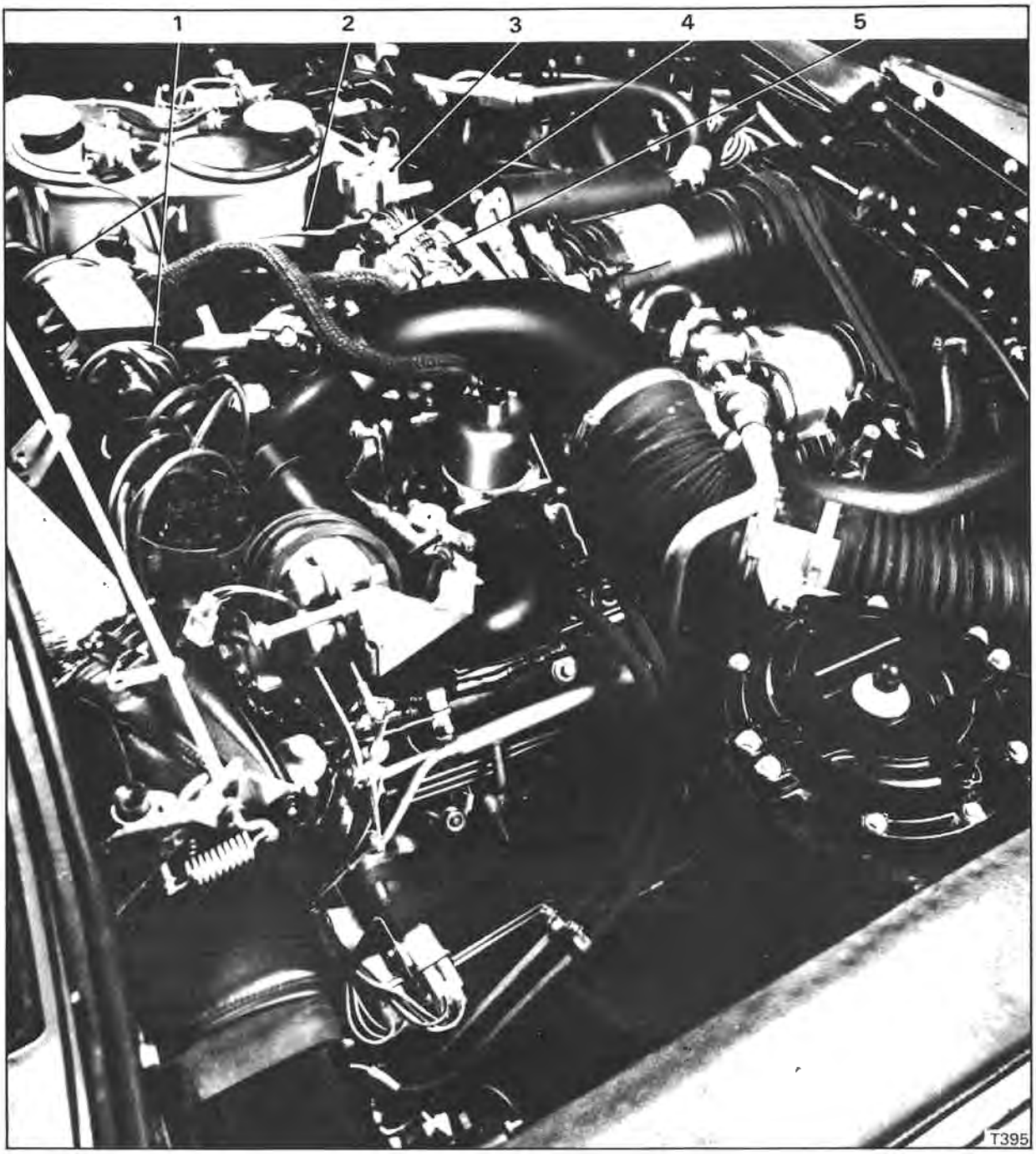

Fig. U3 Engine compartment details (R.H. side)

1 Exhaust gas recirculation valves
2 E.G.R. signal hose
3 Weakening device assembly
4 Weakening and E.G.R. systems cut-off solenoid
5 Anti 'run-on' solenoid

Printed in England
© Rolls-Royce Motors Limited 1979

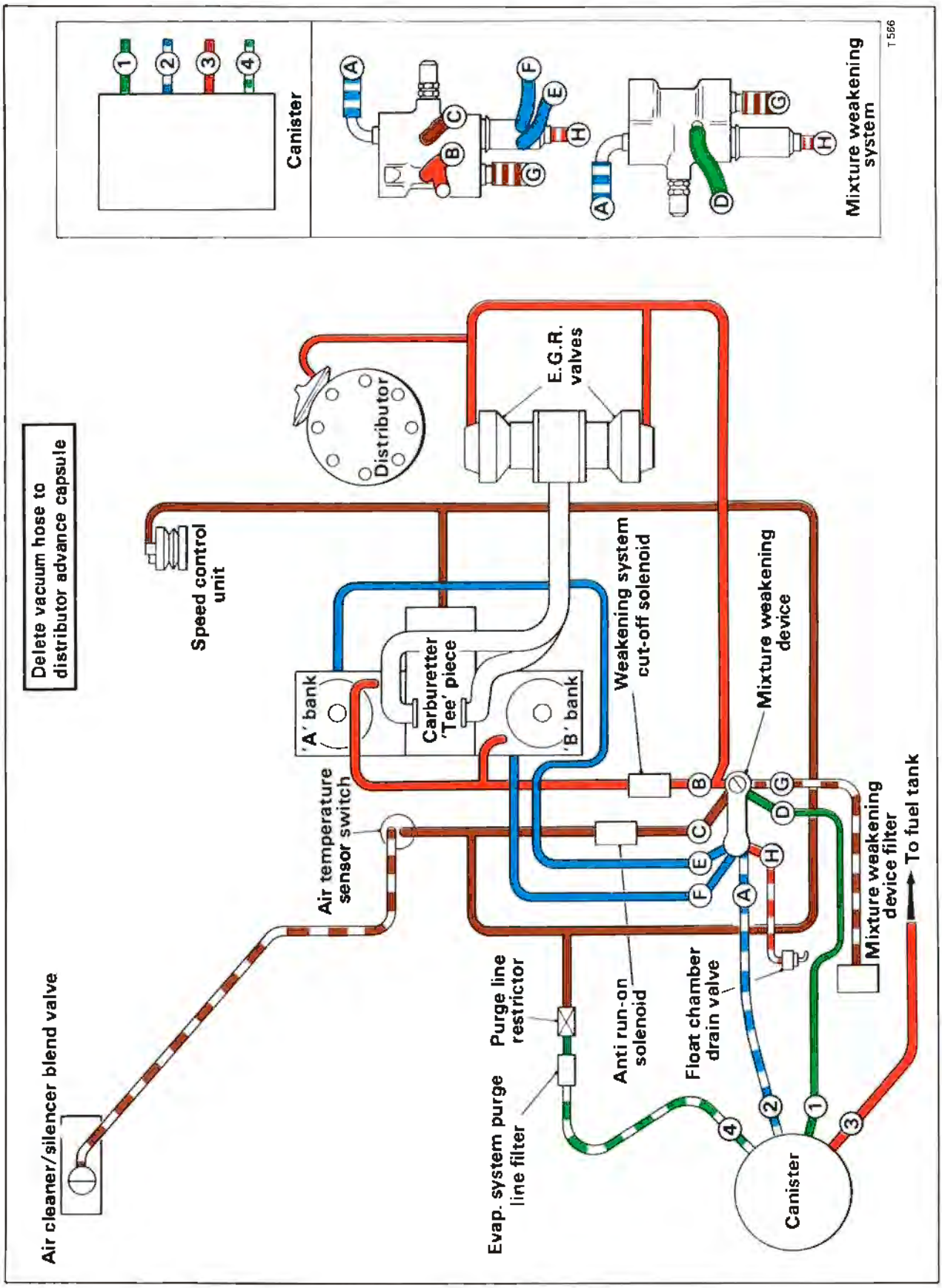

Fig. U4 Hose routing diagram - 1979 model year cars

Printed in England
© Rolls-Royce Motors Limited 1979
January 1979
TSD 4200
(Japan
1979 Model year)

Section U2

Exhaust emission control system

The Exhaust Emission Control System is designed to reduce the carbon monoxide, unburnt hydrocarbon and oxides of nitrogen content in the exhaust gases.

The system does not eliminate the danger caused by inhaling exhaust gases in a confined area.

Air from the atmosphere is drawn into the engine driven air injection pump through a centrifugal filter. From the pump, a quantity of air proportional to engine speed passes via a three-way connection block (containing a relief valve), through check valves to the air manifolds and then into the exhaust ports. This air combines with the exhaust gases discharged from the combustion chambers and promotes the oxidation process in the exhaust system and catalytic converters. The gases then pass through the exhaust system to atmosphere.

In addition, a proportion of the exhaust gas from the exhaust balance pipe situated between the two downtake pipes, is recirculated through vacuum operated metering valves into the carburetter 'tee' piece, just downstream of the throttle plates. The recirculated exhaust gas mixes with the inlet charge of fuel/air mixture in the induction manifold and is distributed to the cylinders, lowering the peak combustion temperature and reducing oxides of nitrogen emissions.

Before commencing work on the exhaust emission control system, care should be taken to ensure that the relevant components are not hot.

The system is illustrated in Figure U5 and comprises the following main components.

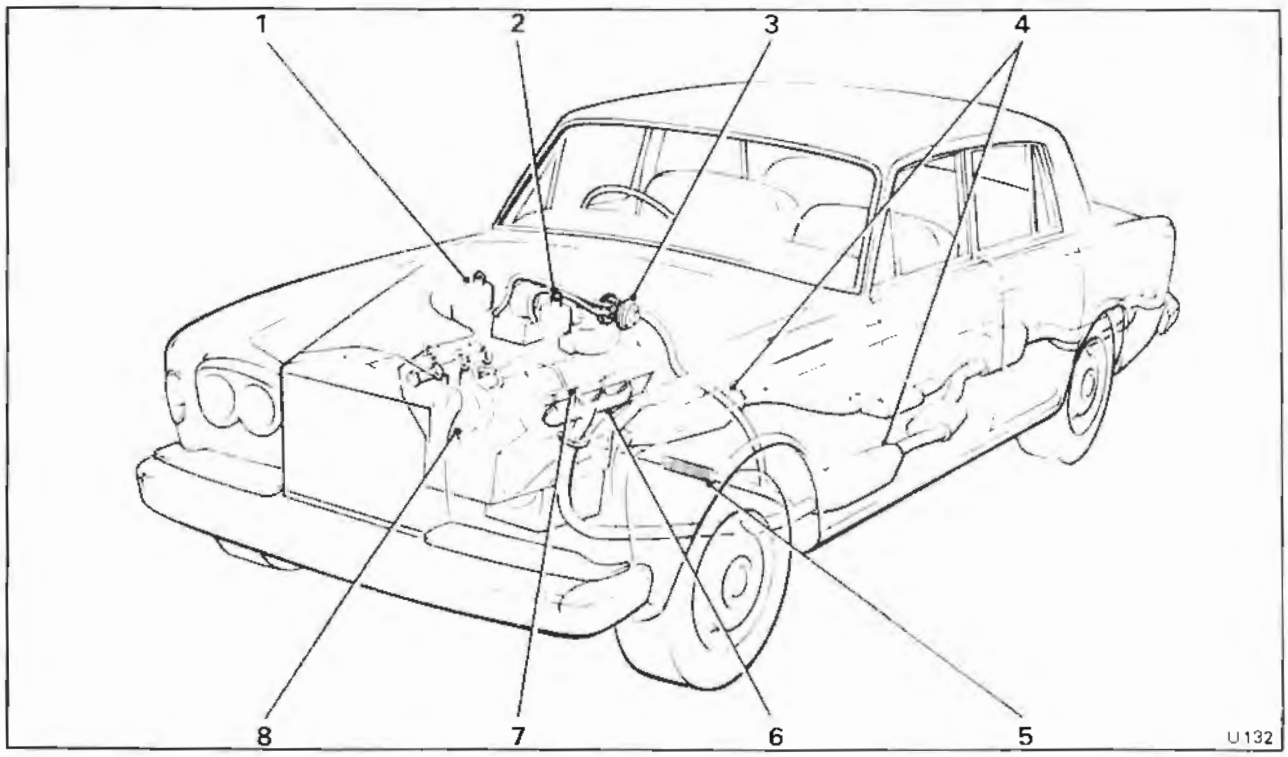

Fig. U5 Exhaust emission control system

1 'A' bank carburetter
2 'B' bank carburetter
3 Exhaust gas recirculation valves
4 Catalytic converters
5 Exhaust system balance pipe
6 'B' bank exhaust manifold
7 'B' bank air manifold
8 Air pump

Air injection system (see Fig. U6)
Air manifolds
Air pump
Check valves
Centrifugal air filter
Pressure relief valve
Three-way connection block

Exhaust gas recirculation system (E.G.R.) (see Fig. U9)
Cut-off solenoid (see Section U7)
Cut-out switch (see Section U7)
Distribution pipes
E.G.R. valves
E.G.R. valves heatshield
Feed pipe
Full throttle cut-out micro-switch (see Section U7)

Exhaust system (see Figs. U5 and U12)
Catalytic converters (For details of the Exhaust system refer to Chapter Q).

For details of the servicing and maintenance requirements of the Exhaust Emission Control System, refer to the Service Schedules Manual - T.S.D. 4117.

Air injection system (see Figs. U5 and U6)
A detailed description of the air injection system is given at the beginning of this section.

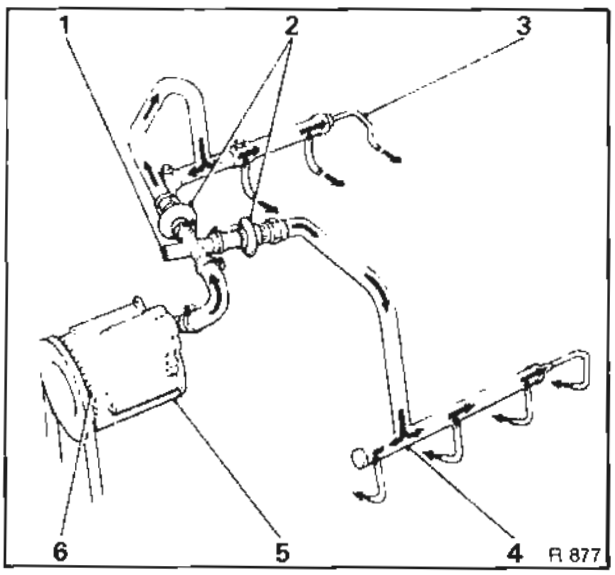

Fig. U6 Air injection system
1 Relief valve
2 Check valves
3 'A' bank air manifold
4 'B' bank air manifold
5 Air pump
6 Air pump intake

Air injection system - To test
1. Connect an electric impulse tachometer to the engine in accordance with the manufacturer's instructions.
2. Start and run the engine at a constant speed of 2 000 r.p.m., check that air does not escape from the relief valve.
3. If air does escape during Operation 2, check that the correct (blue) setting plug is fitted to the pressure relief valve.
4. If the system does not operate as described in Operation 2, stop the engine and fit a new three-way connection block assembly (containing the pressure relief valve).
5. Repeat Operation 2.
6. Stop the engine and remove the test equipment.

Air injection system - Leak check
Check the air injection system for air leaks by carrying out the following sequence of operations.
1. Ensure that the ignition is switched off.
2. Visually inspect the condition of all hoses, pipes and joints associated with the air injection system.
3. Ensure that all worm drive clips are tight.
4. Start the engine and listen carefully for any evidence of an air leak from the system.
5. If an air leak is suspected it is permissible to coat the component or hose with a soap solution, soap bubbles will confirm an air leak.

Air injection system - Fault diagnosis
To diagnose malfunctioning of the air injection system refer to Section U8 - Fault diagnosis.

Air manifolds
The air manifolds convey air from the check valves to the engine exhaust ports. One air manifold is fitted to each bank of cylinders and is identified as 'A' bank air manifold or 'B' bank air manifold.

To remove an air manifold, unscrew the check valve union and the four ¾ in. A/F adapters in the cylinder head.

The 'A' bank air manifold is reasonably straight forward to withdraw but 'B' bank air manifold will require the disconnecting of several other hoses and pipes (e.g. choke stove pipes, fuel evaporative weakening device hoses and pipes, etc.), to facilitate withdrawal.

Fit the air manifolds by reversing the procedure given for removal, noting that the check valve union has a tapered thread. All the adapters in the cylinder head should be torque tightened to the figures given in Chapter P.

Air pump
The air pump is of the rotary vane type and is belt driven from the engine coolant pump. The centrifugal air filter is an integral part of the pump

and is situated between the pump body and the pump driving pulley.

Air pump - To remove (see Fig. U7)

1. Disconnect the battery (refer to Chapter M).
2. Unscrew the worm drive clip and detach the hose from the pump to the three-way connection block, at the pump. Blank off the hose and pump connections to prevent the ingress of dirt, etc.
3. Slacken the two 7/16 in. A/F setscrews on the drive belt adjustment strut; remove the upper bolt.
4. Remove the drive belt from the pulley.
5. Support the air injection pump and unscrew and remove the 7/16 in. A/F mounting setscrew situated on the opposite side of the pump pulley.

Air pump - To fit

Fit the air pump by reversing the procedure for removal noting the following.

1. Ensure that the driving belt is adjusted so that an applied force of 5,5 kg (12 lb.) mid-way between the air injection pump pulley and the coolant pump pulley causes the belt to deflect 9,5 mm. (0.375 in.).

Air pump pulley

1. To remove, unscrew and remove the three setscrews situated around the centre of the pulley. Withdraw the pulley.
2. To fit the pulley, reverse the procedure given for removal ensuring that the setscrews are torque tightened to the correct figure (see Chapter P).

Check valves

The check valves are non-return valves (one-way valves) and one is fitted into the air injection system between the air pump and the air manifolds, for each bank of cylinders.

The check valves prevent the backflow of exhaust gases into the air lines or air pump, they operate whenever the exhaust back pressure exceeds the air pump delivery pressure at high speed and/or in the case of air pump drive belt failure.

To remove a check valve, slacken the worm drive clip situated on the air pump to check valve hose. Unscrew the union from the air manifold and withdraw the check valve. Fit a check valve in the reverse order.

Pressure relief valve (see Figs. U6 and U8)

The spring loaded pressure relief valve is permanently housed within the three-way connection block, its function is to allow excess air to escape from the air injection system when the check valves are closed. The relief valve prevents damage to the pump vanes and excess exhaust temperatures under extreme operating conditions.

If it becomes necessary to remove the pressure relief valve three-way connection block, slacken the worm drive clips on the three connecting hoses and withdraw the assembly.

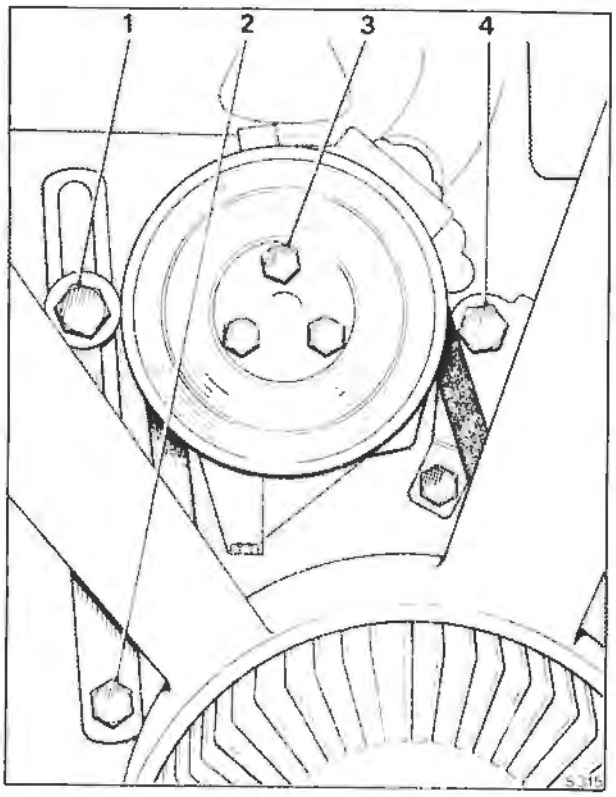

Fig. U7 Air injection pump

1 Adjustment strut upper setscrew
2 Adjustment strut pivot setscrew
3 Pulley retaining setscrews
4 Air pump mounting setscrew

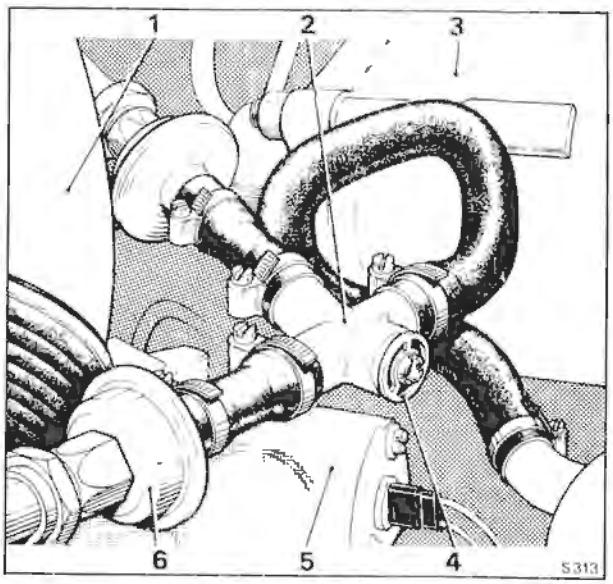

Fig. U8 Three-way connection block

1 Carburetter air intake
2 Three-way connection block
3 Refrigeration compressor
4 Air injection system pressure relief valve
5 Thermostat elbow
6 Check valve

Printed in England
© Rolls-Royce Motors Limited 1979

To test the pressure relief valve, blank off the two connections for the check valves and apply pressure to the connection from the pump; ensure that the relief valve operates within the following acceptable limits.
0,5 kg/sq.cm. to 0,6 kg/sq.cm.
(7.4 lb/sq.in. to 8.4 lb/sq.in.)

Exhaust gas recirculation system (E.G.R.) (see Figs. U5 and U9)

A detailed description of the exhaust gas recirculation system (E.G.R.) is given at the beginning of this section.

Distribution pipes

The distribution pipes convey the recirculated exhaust gas from the E.G.R. valves into the carburetter 'tee' piece.

Distribution pipes - To remove

1. Using a 7/16 in. A/F spanner unscrew and remove the two nuts and washers securing the distribution pipes to the E.G.R. valve mounting block.
2. Unscrew the 7/16 in. A/F setscrews retaining the heatshield to 'B' bank air horn; collect the washers.
3. Ease the mounting block rearward to free the joint face; discard the gasket.
4. Support the weight of the distribution pipes.
5. Unscrew and remove the four 2 B.A. setscrews and washers securing the two distribution pipe flanges to the carburetter 'tee' piece.
6. Withdraw the distribution pipes and discard the gaskets.

Distribution pipes - To fit

Fit the distribution pipes by reversing the procedure given for removal, noting the following points.
1. Ensure that all joint faces are clean and free from carbon deposits.
2. Coat the joint faces and gaskets at the carburetter 'tee' piece with 'Wellseal'.

Distribution pipes - To clean

1. Remove the distribution pipes as described in Distribution pipes - To remove.
2. With a pointed scraper clean as much carbon deposit as possible from inside the distribution pipes and the joint faces. Particular attention should be given to the carburetter end of the pipes, because the majority of the carbon deposit will be found in this area.
3. Using wire brushes complete the cleaning operation on the distribution pipes.
4. With a pointed scraper remove the carbon deposits from the carburetter 'tee' piece connection orifices.
5. Before fitting the distribution pipes thoroughly blow-out the pipes and carburetter 'tee' piece con-

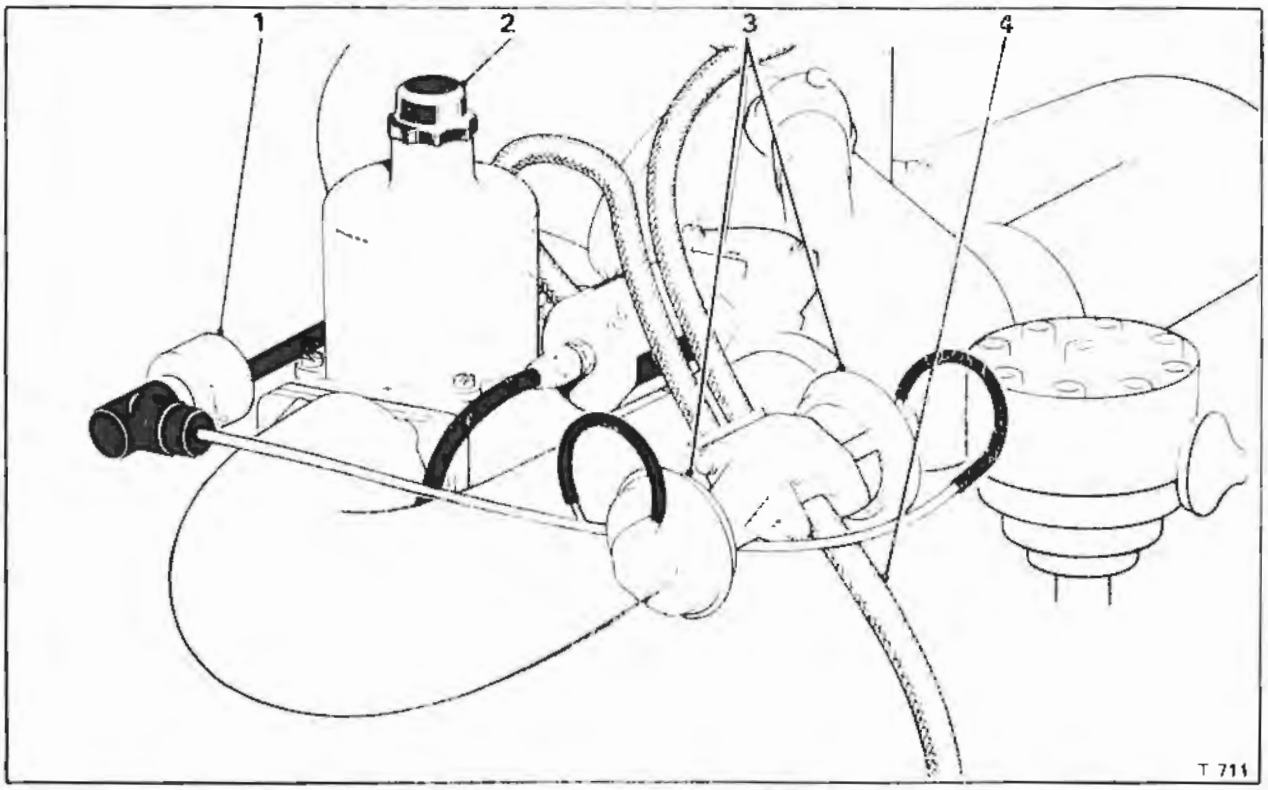

Fig. U9 Exhaust gas recirculation system

1 Weakening device and E.G.R. cut-off solenoid
2 'B' bank carburetter
3 E.G.R. valves
4 E.G.R. feed pipe

nections with compressed air.
6. Fit the distribution pipes as described in Distribution pipes - To fit.

E.G.R. valves (see Fig. U10)
A proportional flow recirculation system is used. Exhaust gas from the balance pipe between the two downtakes of the dual exhaust system passes through twin metering orifices and is recirculated into the carburetter 'tee' piece. Atmospheric pressure is maintained downstream of the metering orifices by means of the control valves so that the recirculation flow is proportional to the relative effective areas of the metering orifices and the main exhaust system.

Dilution of the inlet charge with exhaust gas lowers the peak combustion temperature and reduces the formation of oxides of nitrogen.

Twin vacuum operated control valves each with an integral pressure transducer are used and the metering orifice of each valve is incorporated in an extension of the valve seat. A carburetter throttle gated vacuum signal is used to operate the valve. This signal is modulated by the integral transducer valve and applied to the control valve diaphragm so that the control valve lift is adjusted to maintain a constant control pressure, just above atmospheric pressure between the metering orifice and the control valve seat.

When the engine load is increased, the control pressure exceeds the transducer valve setting and the transducer valve closes applying the full vacuum signal to the control valve diaphragm and thus opening the control valve and increasing the E.G.R. flow. Similarly, as the engine load is reduced, the control pressure becomes less than the transducer valve setting and the transducer valve opens, venting the diaphragm chamber to atmosphere and causing the control valve to close and reduce the E.G.R. flow. The transducer valve constantly cycles adjusting the control valve lift to maintain a constant control pressure under all normal operation conditions.

The use of a throttle gated vacuum signal ensures complete control valve closure at idle to maintain good idle quality.

To improve starting and drive-away under low temperature conditions a solenoid valve (see Section U7) interrupts the carburetter vacuum signal to the E.G.R. valves until a predetermined air intake temperature is reached.

A micro-switch operated by the accelerator pedal (see Section U7) also controls this solenoid to provide E.G.R. cut-out at full throttle. At high engine speed the exhaust gas back pressure is high. As a result, the integral transducer valve directs full carburetter vacuum signal to the control valves. At high engine speed under full throttle operation the air intake restriction is sufficient to produce a carburetter vacuum signal large enough to open the control valves, this results in excessive

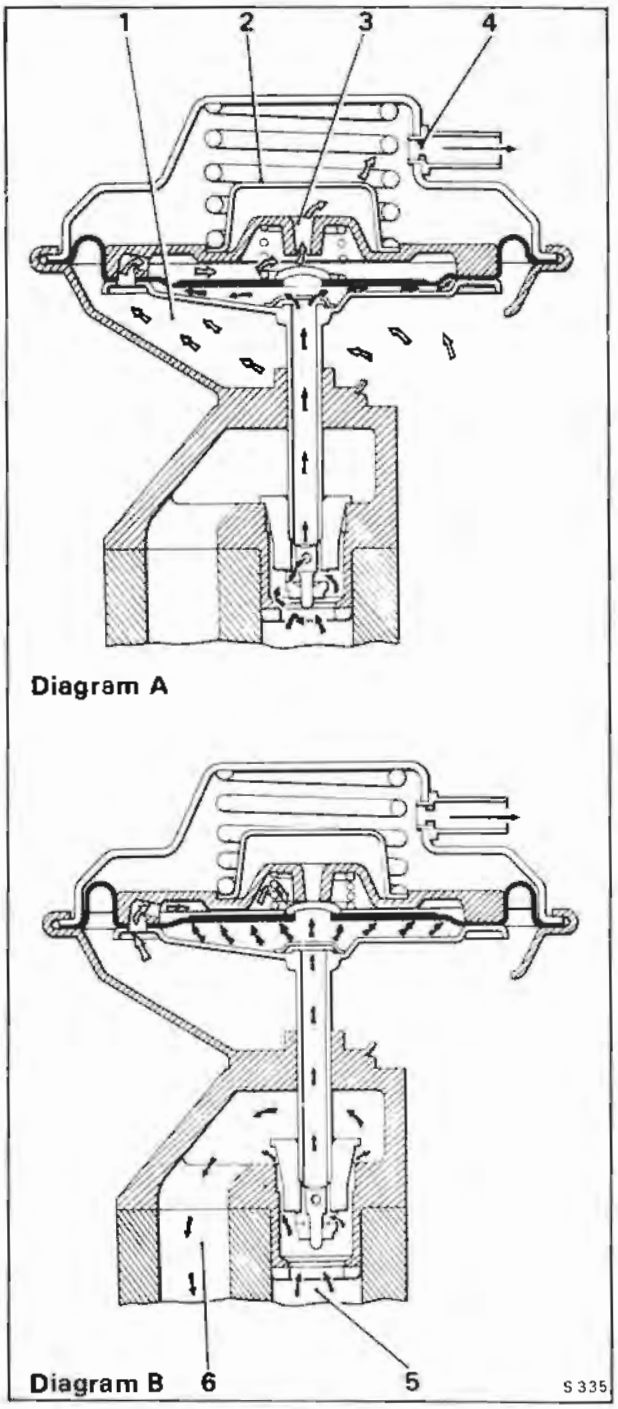

Fig. U10 Exhaust gas recirculation valve
Ambient air ⇦
Exhaust gas ⬅

Diagram A - Exhaust pressure below operating value
1 Ambient air
2 Air filter
3 Air bleed
4 Restrictor

Diagram B - Exhaust pressure above operating value
5 Exhaust gas from balance pipe
6 Exhaust gas to carburetter 'tee' piece

Printed in England
© Rolls-Royce Motors Limited 1979

flow under these conditions which would seriously degrade performance and reduce the safety margin for overtaking.

E.G.R. valves - To remove

1. Detach the small diameter rubber hose from the valve.
2. Unscrew and remove the two ½ in. A/F nuts retaining the valve to the mounting flange; collect the two washers.
3. Withdraw the valve and remove the gasket from the mounting flange.
4. Repeat Operations 1 to 3 inclusive on the second valve.

E.G.R. valves - To fit

Fit the valves by reversing the procedure for removal, noting the following points.

1. Ensure that the valve pintle (see Fig. U10) is secure on the valve stem.
2. Ensure that the valve and mounting flange joint faces are clean and free from carbon deposits.
3. Always use a new mounting flange gasket.

E.G.R. valves - To clean

1. Remove the valves as described in E.G.R. valves - To remove.
2. Using a scraper, remove all carbon film from the valve and mounting flange faces; complete the operation with a wire brush.
3. Clean the carbon from the valves using a wire brush fitted into a portable drill. Take care not to damage the valve seating area.
4. Thoroughly blow out the valves with compressed air to ensure that all loose carbon particles are removed.
5. Upon completion of the cleaning operations, fit the valves to the engine mounting flange as described in E.G.R. valves - To fit.

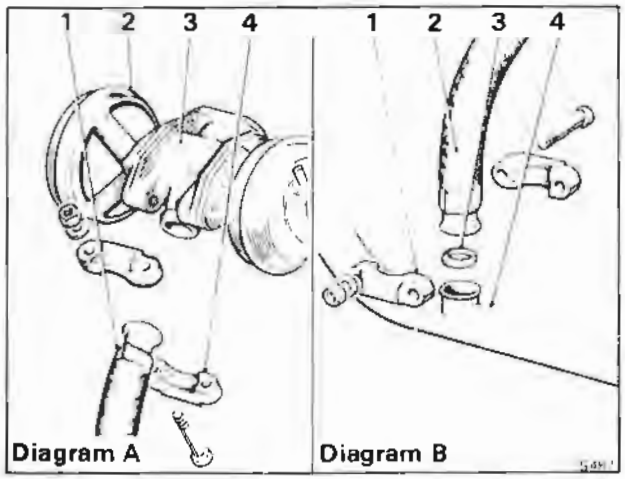

Fig. U11 E.G.R. feed pipe joints

Diagram A - Upper joint

1 Feed pipe
2 E.G.R. valve
3 E.G.R. valve mounting block
4 Clamp bracket

Diagram B - Lower joint

1 Clamp bracket
2 Feed pipe
3 Sealing ring
4 Exhaust balance pipe

E.G.R. valves - To check

The E.G.R. system is automatically controlled by exhaust backpressure to maintain a constant E.G.R. proportion over normal road load conditions. Checks to ensure the correct operation of the valves are only required under no load conditions as follows.

1. Connect an electric impulse tachometer to the engine in accordance with the manufacturer's instructions.
2. Ensure that the parking brake is firmly applied and that the gear range selector is in the 'Park' position.
3. Ensure that the pressure tapping cap fitted to the weakening device is correctly tightened.

   Start and run the engine until normal operating temperature is attained.
4. Ensure that the engine has run for at least 25 mins. after the engine coolant thermostat has opened.
5. Allow the engine to return to the idle speed.
6. Increase the engine speed slowly noting the operation of the E.G.R. valves.
7. The E.G.R. valves should commence to open between 700 r.p.m. and 950 r.p.m.

If the valves either fail to open or open late check for the following possible causes.

a. Failed E.G.R. cut-out switch (see Section U7).
b. Failed E.G.R. cut-off solenoid (see Section U7).
c. Failed E.G.R. full throttle cut-out micro-switch (see Section U7).
d. Leak or blockage in the carburetter signal pipe to weakening device cut-off solenoid.
e. Leak or blockage in the E.G.R. valve signal pipe or hose from the E.G.R. cut-out solenoid to the E.G.R. valves.
f. Advanced ignition timing (see Section U6).

If the valves begin to open early check for the following possible cause.

a. Retarded ignition timing (see Section U6).

8. If the E.G.R. valves do not function correctly after carrying out Operations 1 to 7 inclusive, replace the offending valve(s) with new units.
9. Carry out Operations 1 to 7 inclusive.

E.G.R. feed pipe (see Fig. U5)

The E.G.R. feed pipe conveys exhaust gas that is to be recirculated from the exhaust balance pipe to the exhaust gas recirculation valves.

E.G.R. feed pipe - To remove

1. Unscrew the two ¼ in. A/F nuts from the

clamp at the upper end of the feed pipe (see Fig. U11).
2. Collect the two washers and 'split' the clamp from the spherical joint.
3. Repeat Operations 1 and 2 on the lower joint adjacent to the exhaust system balance pipe. Collect the sealing ring.

E.G.R. feed pipe - To fit
Fit the E.G.R. feed pipe by reversing the procedure given for removal, noting the following.
1. Ensure that the joint faces are clean and free from carbon deposits.

E.G.R. valves heatshield - To remove
1. Slacken the two forward ½ in. A/F nuts one on either side of the mounting flange.
2. Unscrew and remove the two $^{7}/_{16}$ in. A/F set-screws retaining the heatshield to the rear of 'B' bank air horn; collect the washers.
3. Ease the assembly forward to release the heatshield slots from the retaining studs.
4. Withdraw the heatshield.

E.G.R. valves heatshield - To fit
Fit the heatshield by reversing the procedure given for removal.

Oxidation catalyst (see Figs. U5 and U12)

A dual exhaust system is used. The catalytic converters are situated in the forward underfloor area, in place of the conventional front silencers (see Fig. U5).

Each converter contains two catalyst blocks of unequal length and has sufficient volume to perform the dual functions of converter and silencer (see Fig. U12). Two converters are fitted to each car, one for each bank of the engine cylinders.

A platinum group metal catalyst on a ceramic monolith support has been chosen for optimum conversion efficiency and rapid warm-up. Two separate blocks are used to minimise the effect of thermal shock, and these are positioned to give good gas distribution and effective utilisation of the catalyst volume.

The catalyst promotes the reaction between the residual hydrocarbons and carbon monoxide in the exhaust and the secondary air injected into the exhaust ports.

Catalytic converter protection
To protect the catalytic converters from damage due to overheating (caused by engine malfunction) a warning system (see Fig. U40) is fitted to the exhaust catalytic converters. This warning system will illuminate a red warning lamp on the facia if the temperature becomes excessive in any of the areas mentioned.

Note
If an exhaust overheat condition is signalled the speed of the vehicle must be reduced to 50 k.p.h. (30 m.p.h.) and this speed must not be exceeded until the cause of the overheat warning has been investigated and corrected by an authorised Franchise holder.

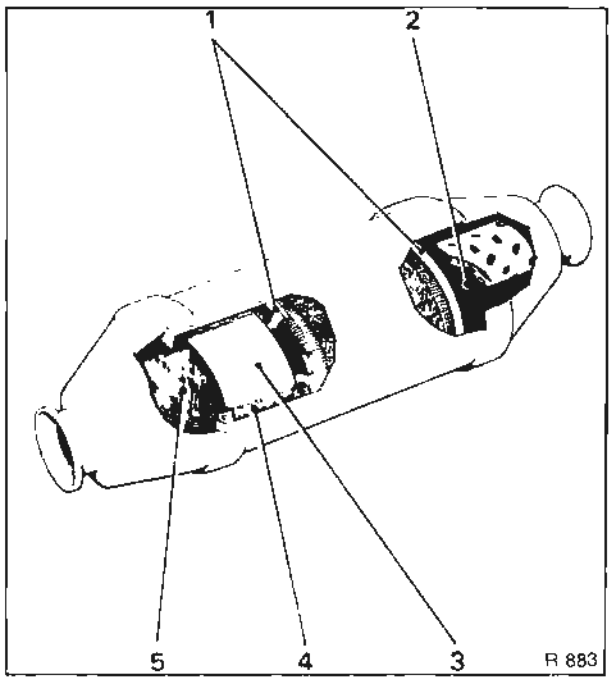

Fig. U12 Catalytic converter assembly
1 Stainless steel mesh retaining rings
2 Silencing chamber
3 Fireclay coating
4 Stainless steel mesh
5 Monolithic catalyst

Further protective measures to be observed are as follows.

Unleaded gasoline

Use unleaded gasoline only (88 RON Min.). The use of leaded gasoline will result in a substantial reduction in the performance of the catalyst. Under no circumstances add fuel system cleaning agents to either the fuel tank or carburetters for induction into the engine, as these materials may have a detrimental effect on the catalytic converter.

Fuel

Do not allow the vehicle to run out of fuel. If the vehicle does run out of fuel at a high speed, possible damage to the catalyst could result.

Engine malfunction

If the engine misfires or suffers from a lack of

Printed in England
© Rolls-Royce Motors Limited 1979

power which could be attributed to a malfunction of either the ignition or fuel systems, the vehicle should be driven only at low speed and the fault rectified as soon as possible. Driving at high speeds with a malfunction in either of these systems could cause overheating and consequent damage to the catalyst.

Catalytic converter - To remove

1. Remove the screws retaining the relevant section(s) of the grass-fire shields below the catalytic converter.

Note

Take care when removing the shields as the sharp edges could cause injury to the operators hands.

2. Unscrew the adapter and withdraw the catalyst overheat sensor (see Fig. U39).
3. Using a 9/16 in. A/F spanner, slacken the nuts on the spherical joint clamps immediately to the front and rear of the catalytic converter.
4. Support the weight of the catalytic converter and remove the nuts from the spherical joint clamps. Dismantle and remove the clamps.
5. Withdraw the catalytic converter and collect the spherical sealing rings from between the pipe connections.

Catalytic converter - To fit

Fit a catalytic converter by reversing the procedure given for removal, noting the following.

1. The sealing rings and pipe flares must be thoroughly clean and free from scale and may be lightly dressed with fine emery cloth if required.
2. The clamp bolt threads should be lightly oiled to prevent binding during assembly and the spherical faces of the sealings rings and the grooves in the clamps should be smeared with a graphite lubricant, to ensure correct alignment of the pieces on assembly.
3. Fit the catalytic converter assembly complete with sealing rings, then loosely fit the joint clamps.

Note

The catalytic converter assembly should be fitted with the square shaped catalyst cells (visible when looking along the short pipe into the catalytic converter assembly) towards the front of the vehicle and the perforated tube (visible when looking along the short pipe into the catalytic converter assembly) towards the rear of vehicle.

The sealing rings should be fitted between the pipe connections so that the sealing ring with the smaller diameter hole in the centre is fitted to the rear of the catalytic converter assembly.

Section U3

Fuel evaporative emission control system

The Fuel Evaporative Emission Control System eliminates direct venting of the fuel system, thus preventing the release of unburnt hydrocarbons into the atmosphere.

Vapour from the fuel system is collected and stored in a charcoal filled canister. The canister is purged whenever the engine is running and the stored fuel vapour is extracted from the charcoal and burnt in the engine.

The system is illustrated in Figure U13 and comprises the following main components.

Canister (see Fig. U14)
Carbon granules (charcoal)
Float chamber connection
Fuel tank connection
Polurethane air filter
Purge line connection
Weakening device connection

Fuel tank (see Fig. U16)
Combined pressure/vacuum relief valve
Expansion tank
Fuel trap assembly

Purge line (see Fig. U13)
Air filter
Restrictor

Weakening device (see Figs. U18 and U19)
Adjustable orifice
Air filter
Anti 'run-on' solenoid
Cut-off solenoid
Cut-out switch
Float chamber drain valve
Float chamber vent valve
Fuel receiver chamber
Non-return valves
Venturi chamber

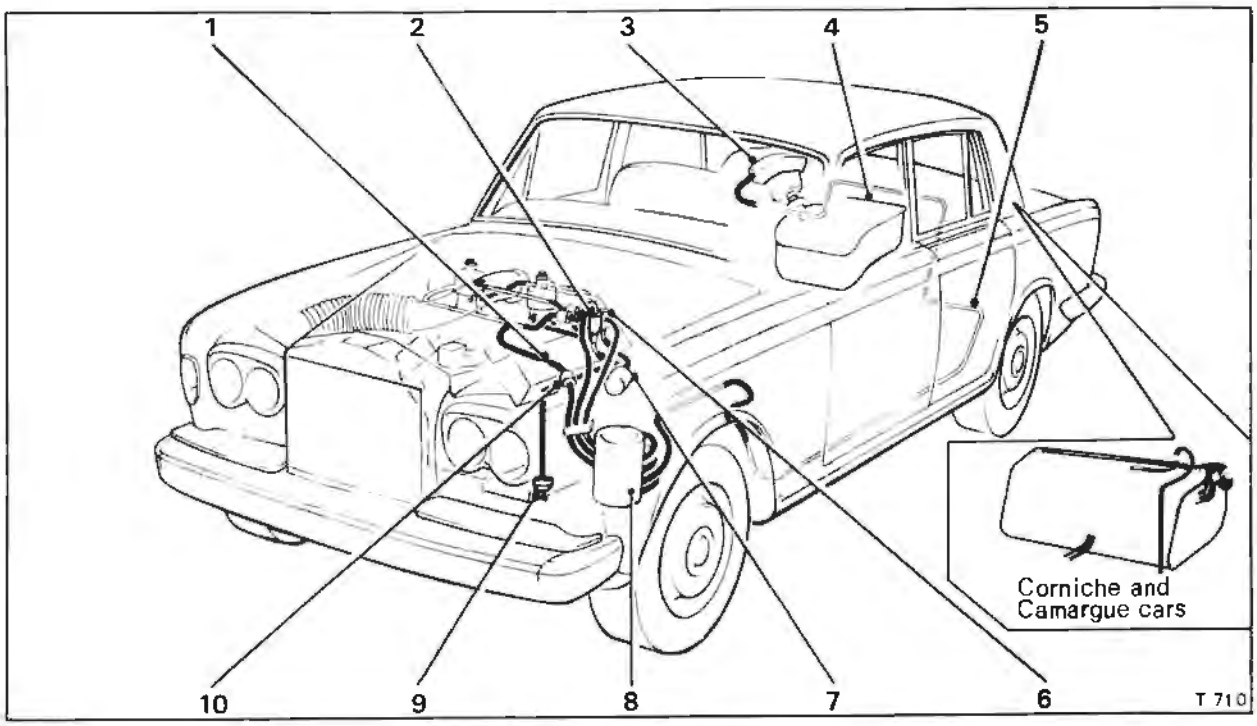

Fig. U13 Fuel evaporative emission control system

1 Purge line restrictor
2 Float chamber vent valve
3 Fuel trap assembly
4 Fuel tank
5 Fuel vapour line
6 Weakening device
7 Weakening device filter
8 Evaporative loss control canister
9 Float chamber drain valve
10 Purge line filter

Printed in England
© Rolls-Royce Motors Limited 1979

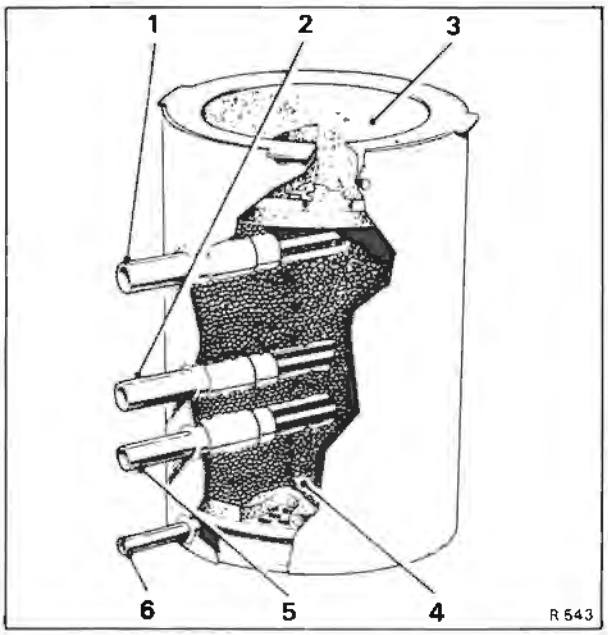

Fig. U14 Control canister
1 Weakening device connection
2 Float chamber vent connection
3 Polyurethane filter
4 Carbon
5 Fuel tank vent connection
6 Purge line connection

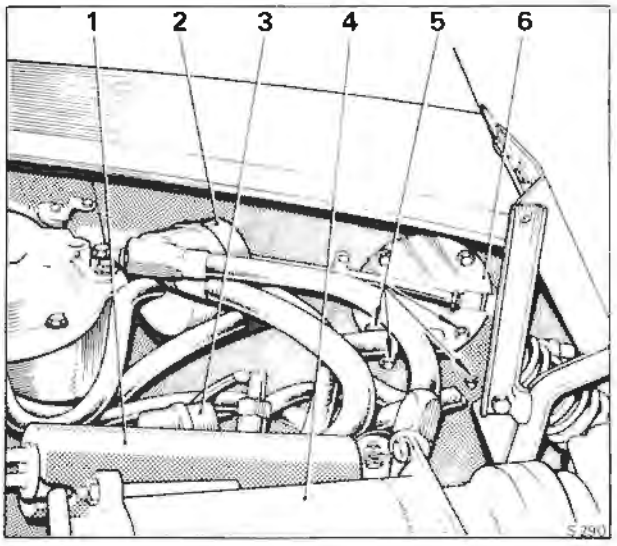

Fig. U15 Foam filter access cover, purge line filter and weakening device filter
1 Fuel cooler
2 Weakening device filter
3 Purge line filter
4 Refrigeration compressor
5 Canister securing setscrews
6 Foam filter access cover

For details of the servicing and maintenance requirements of the Fuel Evaporative Emission Control System, refer to the Service Schedules Manual - T.S.D. 4117.

Control canister (see Figs. U13 and U14)
The evaporative emission control canister is situated under the left-hand front wing. It is a cylindrical container filled with activated carbon granules which absorb and retain fuel vapour. There are connections for the mixture weakening device vent, the fuel receiver vent, the fuel tank vent and the purge line. The top of the canister is open to atmosphere and contains a Polyurethane foam filter element.

When the engine is running air is drawn from the atmosphere through the foam filter element and carbon granules to the lowest connection on the canister. The air, containing fuel vapour from the carbon granules then passes into the engine via the purge line.

Control canister - To remove
1. Remove the front left-hand road wheel as described in Chapter R.

Note
Left-hand is determined when viewed from the driver's seat.

2. Remove the front section of the underwing sheet by unscrewing the small screws situated around the outer edge of the sheet. Resistance may be experienced when the sheet is being freed, as it is sealed around the edge with a sealing compound (i.e. Bostik Seelastik).
3. The canister will be clearly visible towards the front of the vehicle.
4. Using the special pliers (RH 8090), remove the steel retaining clips from the four hose connections to the canister. Label the hoses to facilitate identification and withdraw the four hoses from the canister.
5. Raise the bonnet and from inside the engine compartment locate the canister foam filter access cover (see Fig. U15).
6. Unscrew and remove the four setscrews indicated as securing setscrews in Figure U15. Before removing the final setscrew support the control canister.
7. Withdraw the canister from beneath the wing.

Control canister - To fit
Fit the canister by reversing the procedure described for removal, noting the following points.
1. Ensure that the rubber hoses are in a good condition and new hose retaining clips are fitted.
2. Ensure that the underwing sheet is sealed with a suitable compound (i.e. Bostik Seelastik).

Polyurethane foam filter element - To renew
It is not necessary to remove the canister from the car in order to extract the polyurethane foam filter element. A detachable cover is situated in the left-hand valance (see Fig. U15).

1. Unscrew the four screws retaining the access cover, lift off the cover and withdraw the filter element from the top of the canister.

When fitting a new element, ensure that it is correctly positioned inside the retaining rim of the canister. Fit the access cover and tighten the setscrews.

Fuel tank (see Fig. U16)
On Silver Shadow II, Silver Wraith II and Bentley T2 cars, the fuel tank is vented from three positions to the fuel trap assembly which is mounted above the fuel filler. One vent is from the fuel filler neck and the others are from the fuel tank.

The three vent lines join at a common junction block situated adjacent to the fuel filler neck, the main vent line then passes to the fuel trap assembly.

From the fuel trap a vent line passes under the floor of the car to the evaporative loss control canister.

The fuel trap assembly acts as a liquid separator and prevents liquid fuel from being transferred to the evaporative loss control canister under severe driving manoeuvres when the fuel tank is full or during expansion of the fuel at high ambient temperatures.

A combined relief and vacuum valve fitted into the end of the fuel trap assembly prevents an excessive pressure 'build up' in the fuel tank due to vapourisation or depression (as fuel is consumed), in the event of a blockage in the vent line to the evaporative loss control canister.

Included in the main fuel tank is a small expansion tank (see Fig. U16) of 3,125 litres (5.5 Imp. pt. - 6.7 U.S. pints) capacity. The expansion tank inhibits complete filling of the main fuel tank and provides additional fuel expansion volume to contend with extreme temperature conditions.

When the car is being filled with fuel, the main fuel tank (without an expansion tank) could normally be completely filled, leaving only the filler neck,

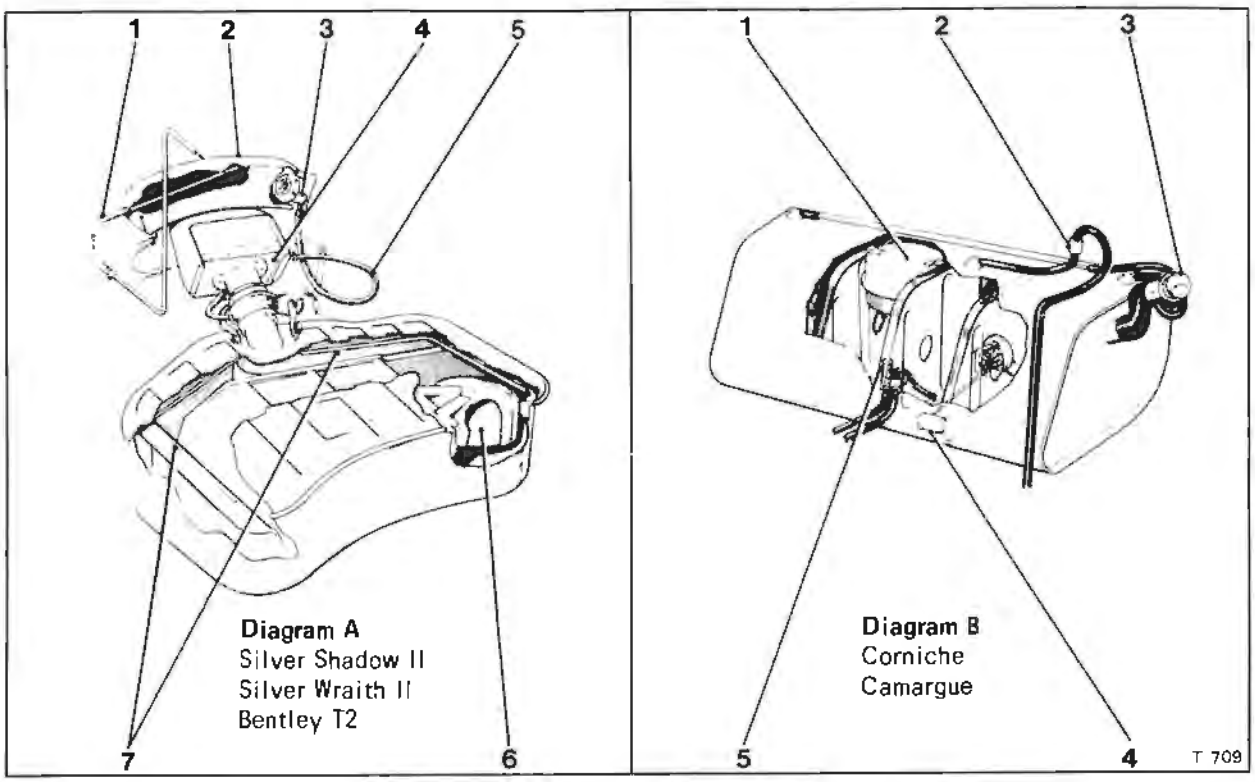

Fig. U16 Fuel evaporative emission control system - fuel tank assembly

1 Fuel vapour line
2 Fuel trap assembly
3 Combined relief and vacuum valve
4 Fuel filler box
5 Relief valve vent
6 Expansion tank and overfill limiter
7 Vent pipes

1 Expansion tank and overfill limiter
2 Rollover valve
3 Fuel filler cap (incorporating combined relief and vacuum valve)
4 Fuel tank float
5 Nylon 'in tank' filter

Printed in England
© Rolls-Royce Motors Limited 1979

vent connector pipes and fuel trap assembly to accommodate the expansion of the fuel. An expansion tank is therefore situated in the upper part of the main fuel tank and as the fuel level rises above the lower part of the assembly it flows inside through two small holes in the base. Two additional holes in the top of the expansion tank allow air to escape.

On Corniche and Camargue cars, the fuel tank is vented via two connections to the filler neck allowing adequate venting of the tank during filling. A separate vapour line passes via a rollover valve from the tank, under the floor on the left-hand side of the car, to the evaporative loss control canister. The rollover valve prevents liquid fuel from entering the evaporative emission control canister during harsh manoeuvres or in the event of vehicle rollover. Fuel vapours pass freely through the valve. The fuel tank is illustrated in Figure U16.

In the event of a blockage in the vapour line to the evaporative loss control canister, a combined pressure and vacuum relief valve in the fuel filler cap prevents an excessive pressure build up in the fuel tank due to fuel vapourisation or depression, as the fuel is consumed.

An expansion tank situated within the main fuel tank inhibits complete filling and provides fuel expansion volume to cope with extreme temperature conditions.

For all other details of the fuel tanks refer to Chapter K.

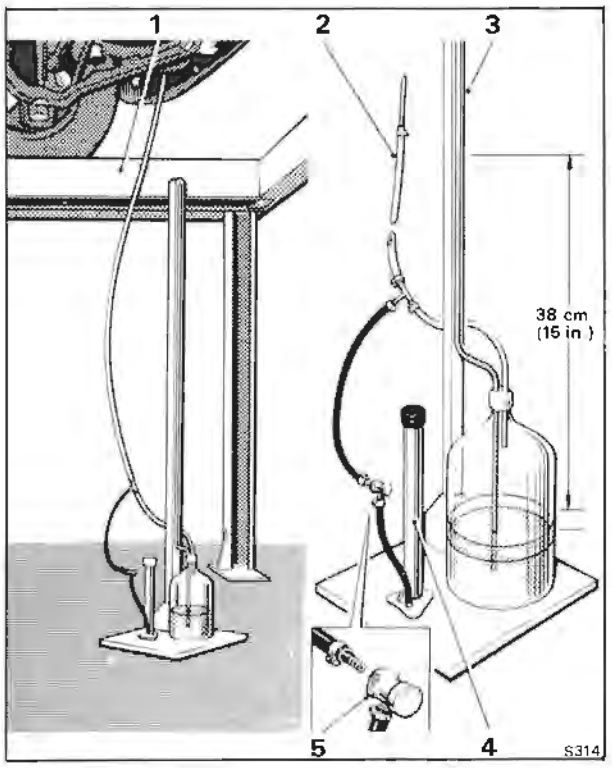

Fig. U17 Leak check test equipment

1 Ramp
2 Connection to fuel tank/canister hose
3 Test equipment
4 Pump
5 One-way pressure valve

Fuel evaporative emission control system - To leak check

Whenever the various pipes, hoses and components of the fuel evaporative emission control system are disturbed, the system should be checked for air leaks upon assembly.

To test the system proceed as follows.

1. Position the vehicle on a ramp and carry out the usual safety precautions (i.e. ensure that the gear range selector lever is in 'Park' position, the parking brake firmly applied, the engine switched off, etc.,). Raise the ramp.
2. Remove the left-hand horn assembly (left-hand is decided when standing under the vehicle, looking towards the front), see Chapter M.
3. Through the resultant gap between the front wing and wing sheet, locate the emission control canister and identify the hose connection from the fuel tank (second from the bottom).
4. Using the special pliers (RH 8090), remove the steel retaining clip from the fuel tank connection hose at the control canister.
5. The fuel tank hose should be detached from the canister and connected to the test equipment (see Fig. U17).
6. Apply air pressure to the fuel tank hose via the test equipment until a reading of 38cm. (15 in.) H_2O is attained and close the pressure supply.
7. After 5 minutes again check the pressure reading, this should not have fallen by more than 12,7 mm. (0.5 in.).
8. If the pressure drop is more than 12,7 mm. (0.5 in.), progressively treat all joints in the system with soap solution to detect air leaks.
9. Rectify any air leaks and again leak check the system.
10. When the system is satisfactory, detach the test equipment and connect the hose to the control canister, secure with a new steel retaining clip.
11. Fit the left-hand horn assembly as described in Chapter M.

Purge line

The purge line consists of a rubber hose, passing from the lowest connection on the canister through the valance junction piece to the induction manifold connection on the opposite side of the engine (see Fig. U13). Incorporated into this hose is the purge line filter and restrictor.

When the engine is running, air drawn through the canister filter and carbon picks up the stored fuel vapours and passes them via the hoses, to the induction system at a point just below the choke

housing. The restrictor in the line controls the flow rate at between 1,41 cu.m. per/hr. and 1,98 cu.m. per/hr. (50 cu.ft. per/hr. and 70 cu.ft. per/hr.) to maintain carburetter metering accuracy and the paper element line filter is fitted to prevent blockage of the restrictor.

Purge line filter
The purge line filter is situated on the left-hand valance just forward of the front road spring pot (see Fig. U15). The air filter assembly is a sealed unit and no attempt should be made to clean the element.

At the mileage intervals specified in the Service Schedules the purge line filter should be removed and a new assembly fitted as follows.

Purge line filter - To remove
1. Using the special pliers (RH 8090) remove the two steel retaining clips situated one on either side of the filter assembly.
2. Detach the inlet and outlet hoses.
3. Slacken the small setscrew that secures the clamp bracket around the filter assembly.
4. Swivel the clamp bracket to enable the filter assembly to be withdrawn.

Purge line filter - To fit
Fit the purge line filter by reversing the procedure given for removal, noting the following points.
1. Ensure that the filter assembly is fitted the correct way around; the word 'IN' moulded into the end of the casing should be towards the front of the vehicle.
2. Ensure that the rubber hoses are in a good condition and that new hose retaining clips are used.

Purge line restrictor
The purge line restrictor is situated in the purge line between the air filter and the induction manifold connection (see Fig. U13). The function of the restrictor is to maintain the air flow through the purge line within predetermined limits.

Purge line restrictor - To remove
1. Hold the restrictor firmly and slide the rubber hosing from both ends.

Purge line restrictor - To fit
Fit the restrictor by reversing the procedure given for removal, noting the following point.
1. Ensure that the purge line restrictor is fitted into the line correctly. This can be determined by comparing the diameters of the restrictor ends with those of the rubber hoses.

Purge flow rate - To check
1. Disconnect the hose from the engine side of the purge line filter and insert a flowmeter assembly (RH 8725) into the line between the filter and the restrictor. The flowmeter is a rotameter type capable of measuring between 1,4 cu.m/hr. and 2,0 cu.m/hr. (50 cu.ft/hr. and 70 cu.ft/hr.). The pressure drop across the meter must not exceed 5,08 cm.Hg. (2.0 in.Hg.).
2. Start and run the engine at 650 r.p.m.; the reading on the flowmeter should be between 1,41 cu.m/hr. and 1,99 cu.m/hr. (50 cu.ft/hr. and 70 cu.ft/hr.).
3. If the flow is less than the minimum figure quoted in Operation 2, stop the engine and substitute the purge line restrictor with a straight piece of metal pipe having an internal diameter larger than 4,76 mm. (0.187 in.).
4. Start and run the engine at 650 r.p.m.; the reading on the flowmeter should be in excess of 1,99 cu.m/hr. (70 cu.ft/hr.).
5a. If the flowmeter reading is above 1,99 cu.m/hr. (70 cu.ft/hr.) fit a new purge line restrictor and repeat Operation 2.
b. If the flowmeter reading is below 1,99 cu.m/hr. (70 cu.ft/hr.) the cause could be as follows.
(i) An air leak in any of the vacuum hoses that connect to the induction manifold connection (vacuum manifold).
(ii) A blockage in the vacuum manifold or any of the connecting hoses.

Any leaks or blockages should be rectified; the restrictor should be fitted and Operation 2 repeated. If the flow rate is still incorrect fit a new restrictor and again, repeat Operation 2.
6. Remove the test equipment and connect the hose to the purge line filter.

Weakening device
The mixture weakening device (see Fig. U19) is fitted adjacent to 'B' bank carburetter and incorporates a fuel receiver.

For any given position of the fuel metering needle, the rate of the discharge from the carburetters is governed by the difference in air pressure existing over the fuel in the float chamber and that over the jet.

The weakening device is designed to reduce the air pressure (create a depression) in the float chamber at part throttle, thereby reducing the rate of discharge from the jet.

The weakening device housing conteins two chambers, (see Fig. U18), the venturi chamber, and the fuel receiver chamber, the two being interconnected by a passage and an adjustable venturi.

The venturi chamber is connected to a small drilling on the edge of the butterfly plates of both carburetters via the weakening device solenoid valve, with the throttle slightly open the drillings are subjected to manifold depression thus creating a depression in the venturi chamber which draws air from the weakening device air filter. This depression is also apparent in the fuel receiver

Printed in England
© Rolls-Royce Motors Limited 1979
January 1979
TSD 4200
(Japan
1979 Model year)

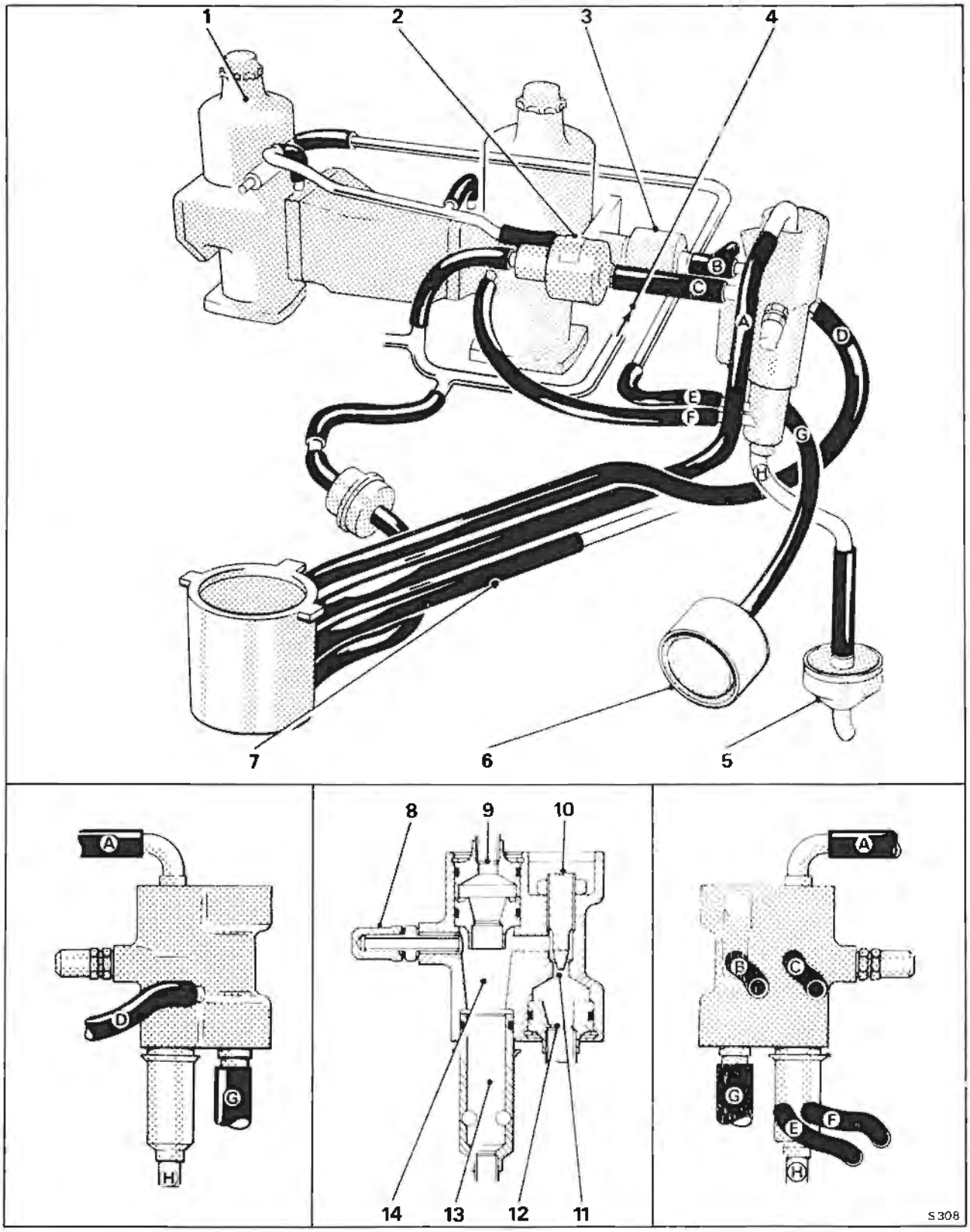

Fig. U18 Mixture weakening device

1 'A' bank carburetter
2 Anti 'run-on' solenoid
3 Weakening and E.G.R. systems cut-off solenoid
4 Induction manifold connection
5 Float chamber drain valve
6 Weakening system air filter
7 Vent from fuel tank
8 Weakening device signal cap
9 Float chamber vent valve
10 Adjusting screw
11 Venturi chamber
12 Air intake valve
13 Fuel receiver
14 Fuel receiver chamber

chamber and subsequently in the carburetter float chambers.

The value of the depression is set by the position of the weakening device adjusting screw.

To obtain adequate float chamber venting to cope with hot soak conditions there is an additional vent from the fuel receiver. This incorporates a low pressure non-return valve to maintain float chamber depression under normal running conditions. In addition to this valve, a one-way valve is fitted into the venturi chamber to prevent any evaporating fuel being discharged to atmosphere.

A float chamber drain, also incorporating a low pressure non-return valve is mounted at the front of the engine adjacent to the oil filter, this valve is connected to the fuel receiver. Should flooding occur the head of fuel in the receiver is sufficient to open the drain valve thus preventing engine stalling if the float chamber needle valves stick.

Weakening device - To remove

1. Label all hoses connected to the weakening device assembly, this will facilitate assembly.
2. Disconnect all hoses to the weakening device.
3. Unscrew and remove the two small setscrews that retain the weakening device to the solenoid platform; the two screws are situated just below the pipe/hose connections for the anti 'run-on' solenoid and weakening device cut-off solenoid.
4. Withdraw the weakening device.

Weakening device - To fit

Fit the weakening device by reversing the procedure given for removal, noting the following point.
1. Ensure that all hoses connecting to the assembly are in a good condition and that all connections are 'air tight'.

Weakening device - To dismantle (see Fig. U18)

1. Remove the weakening device from the vehicle.
2. Remove the small screw that secures the fuel receiver assembly into the base of the weakening device, withdraw the assembly.
3. Unscrew the weakening device signal cap, collect the cap fibre washer. Unscrew the signal line adapter from the casting and withdraw the aluminium washer from the adapter.
4. Remove the circlip from the top of the fuel receiver chamber, withdraw the float chamber vent pipe (slight resistance may be felt due to the rubber sealing ring). With a soft drift (e.g. wooden pencil), push the float chamber vent valve out of the weakening device assembly (the drift is required because the rubber sealing ring fitted around the vent valve will cause a small resistance).
5. Remove the circlip from the base of the venturi chamber, withdraw the **air intake pipe** containing a one-way valve (slight resistance may be felt due to the rubber sealing ring).
6. Remove the **anti-tamper cover** from the top of the venturi chamber, unscrew the lock-nut and using a screwdriver unscrew the **adjusting screw.**

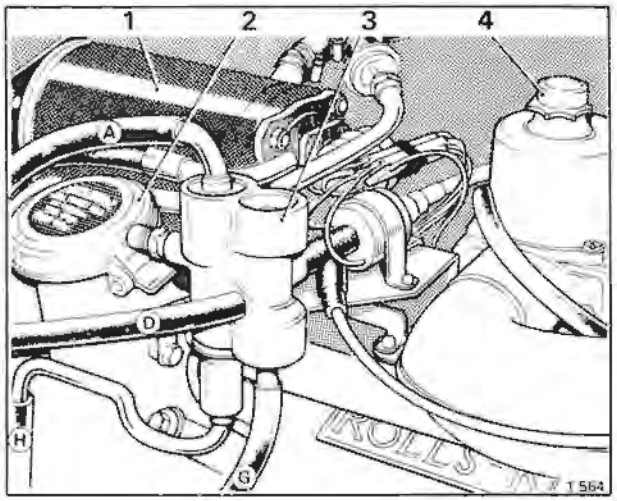

Fig. U19 Position of mixture weakening device
1 Refrigeration compressor
2 Engine oil filler
3 Mixture weakening device
4 'B' bank carburetter

Weakening device - To assemble

To assemble the weakening device, reverse the procedure given for removal, noting the following.
1. Ensure that all components are clean before assembly.
2. Ensure that the rubber sealing rings are in a good condition and lightly smeared with the minimum amount of grease. Ensure that no grease is applied to the valves otherwise a malfunction may occur due to the grease making the valves stick.
3. After assembly, the operator should check that he can blow but not suck on the metal pipes, one on top of the fuel receiver chamber and the other at the bottom of the venturi chamber.

Weakening device signal strength - To check

The **float chamber depression** should be checked as follows.
1. Start and run the engine until normal setting conditions are attained (i.e. engine cooling system thermostat opened, air conditioning unit switched off and the automatic choke is off).
2. Stop the engine.
3. Connect an electric impulse tachometer to the engine in accordance with the manufacturer's instructions.
4. Isolate the E.G.R. valves from the weakening system by disconnecting the E.G.R. signal hose from the rubber 'tee' piece,located between the weakening system cut-off solenoid and the weakening device. Blank off the 'tee' piece connection.

Printed in England
© Rolls-Royce Motors Limited 1979

5. Unscrew and remove the weakening device signal cap and connect a 0 to 15,5 cm. (0 to 6 in.) water manometer to the weakening device adapter.
6. Start and run the engine at 2 000 r.p.m. in 'Park' until a steady manometer reading is obtained, this should be 5,08 cm. (2.0 in.) of water depression.

A low or zero reading may be caused by
a. A blockage in the weakening device venturi to the weakening device cut-off solenoid.
b. A blockage or restriction in the signal pipe(s).
c. An air leak in the hoses or pipes from the float chambers to the emission control canister.
d. Faulty float chamber vent valve or drain valve.
e. Low engine temperature [below 14° C. (57° F.)] a faulty weakening device solenoid or weakening device switch.

A high reading may be caused by
a. An obstruction in the weakening device bleed orifice (weakening device signal strength adjusting screw).
b. Obstructed weakening device air filter or evaporative loss control canister.
c. Incorrect connection or blockage in the weakening device to either the valance connection or the evaporative loss control canister.
d. Weakening device air intake valve sticking closed.
e. Obstructed weakening device air filter hose.
f. Incorrect operation of anti 'run-on' solenoid.
7. If the float chamber depression is still incorrect after checking through the possible causes in Operation 6, set the weakening device signal strength (float chamber depression) by unlocking and turning the adjusting screw (see Fig. U18) until the correct manometer reading is obtained. Turning the adjusting screw clockwise increases the depression.
8. Remove the blank from the weakening system 'tee' piece and connect the E.G.R. hose.
9. Raise the engine speed slowly noting both the manometer and tachometer readings. The maximum steady manometer reading should be obtained between 1 200 r.p.m. and 1 500 r.p.m.
10. Allow the engine speed to return to the idle setting (650 r.p.m.) and check the float chamber depression reading on the manometer.
If the float chamber depression at idle speed is above 10,16 mm. H_2O (0.4 in. H_2O) check the ignition timing at idle as this condition may result in unsatisfactory driveability.
11. Fit the tamperproof cover into the top of the venturi chamber.

Weakening device air filter - To remove
The air filter container is mounted on the left-hand valance just forward of the road spring pot (see Fig. U15).

This is a sealed unit and no attempt should be made to clean the element.
1. To remove the air filter assembly, detach the hose and unscrew the worm drive clip situated around the assembly.
2. Withdraw the assembly.

Weakening device air filter - To fit
Fit the air filter container by reversing the procedure given for removal.

Section U4

Crankcase emission control system

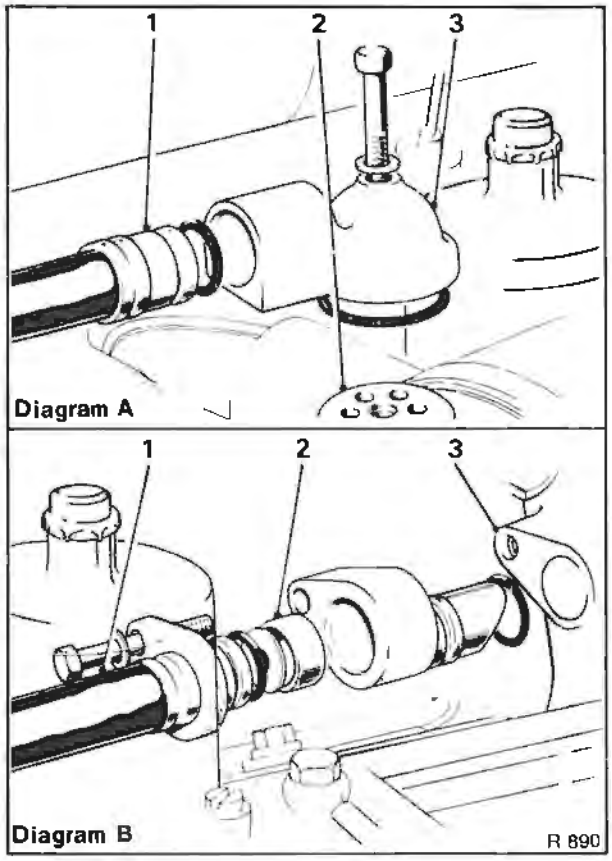

Fig. U20 Crankcase breather pipe connections

Diagram A	Diagram B
1 Breather tube	1 Breather tube
2 Choke housing	2 Flame trap
3 Breather connection	3 Oil filler housing

Crankcase emissions are controlled by a recirculatory closed breather system.

An insulated draught tube connects the crankcase via the oil filler which is fitted with a sealed cap, to the choke housing upstream of both the choke butterfly and the carburetters. A flame trap capsule containing three wire mesh discs is fitted in a housing at the crankcase end of the draught tube. Engine emission (blow-by) is drawn into the induction system via the draught tube, due to the depression in the choke housing.

1. The flame trap fitted to the breather pipe should be cleaned in the following manner, at the specified mileage.

2. Unscrew the setscrew securing the breather pipe connection to the oil filler pedestal; withdraw the connection from the pedestal (slight resistance may be felt due to the rubber 'O' ring connections).

3. Withdraw the connection from the pipe flange and collect the restrictor.

4. Wash the flame trap assembly in clean fuel then dry with compressed air from a high pressure air line. The flame trap assembly consists of 3 gauzes crimped together as shown in Figure U20.

5. To clean the adapter fitted to the choke housing, remove the single setscrew from the breather pipe end connection and detach the pipe.

6. Clean the adapter fitted to the choke housing and ensure that the holes in the adapter are clear.

7. Assembly of the flame trap and breather pipe is in the reverse order, ensuring that the 'O' rings are in good condition.

Printed in England
© Rolls-Royce Motors Limited 1979

Section U5

Carburetters and Automatic choke system

The Carburetter and Automatic Choke System can be seen illustrated in Figure U21 and comprises the following main components.

Automatic choke
Fast-idle
Stove pipe
(For the remainder of the Automatic Choke System refer to Chapter K).

Carburetters (see Fig. U23)
Bi-metal jet lever
Carburetter fuel filter
Carburetter idle airflow balance
Float
Float chamber
Float needle
Jet assembly
Jet needle
Overrun valve
Piston
Piston damper
Piston damper retainer (Piston ball race clip)
Suction chamber
Tamperproof caps
Throttle disc
Throttle linkage
Viscosity compensator

Temperature controlled air intake
Air cleaner/silencer
Air blend valve
Cold air intake
Hot air scoop
Manifold vacuum hose
Resonator
Temperature sensor

Weakening device
(Refer to Section U3).

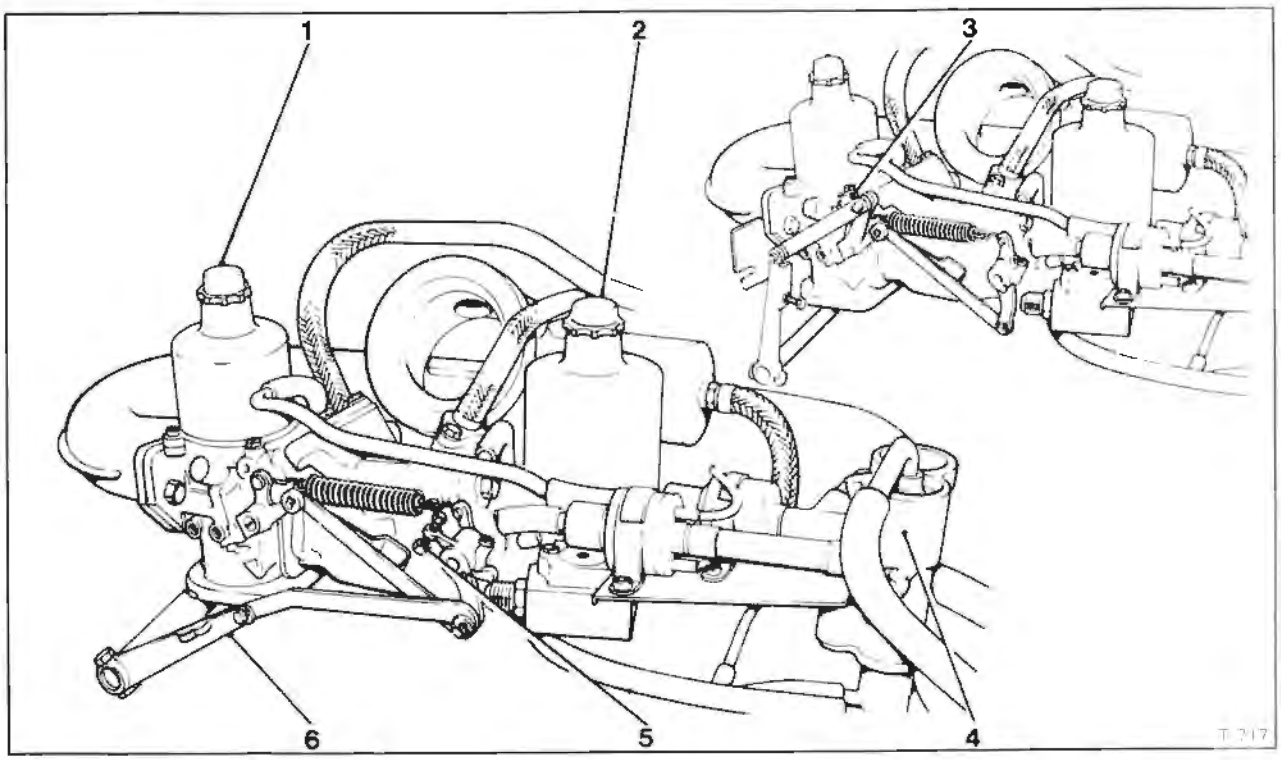

Fig. U21 Carburetters and linkage
1 'A' bank carburetter
2 'B' bank carburetter
3 Idle speed screw (L.H. drive)
4 Mixture weakening device
5 Idle speed screw (R.H. drive)
6 Manifold shaft lever (front)

Printed in England
© Rolls-Royce Motors Limited 1979

Automatic choke

All details for the Automatic Choke System are given in Chapter K, except for the checking and setting procedures of the following.

Fast-idle - To set

1. Ensure that the usual safety precautions are carried out (i.e. parking brake firmly applied, gear range selector lever in 'Park', etc.) and connect an impulse tachometer in accordance with the manufacturer's instructions.
2. Disconnect the E.G.R. vacuum signal at the pipe from the solenoid 'Y' piece to the E.G.R. valves and blank the 'Y' piece connection.
3. Start and run the engine until normal operating temperature is attained. Stop the engine and remove the pressure tapping cap from the weakening device (see Fig. U18).
4. Open the throttles and close the choke butterfly against the bi-metal tension using control rod lever (item 1 - Fig. U22) until the adjusting screw (item 6 - Fig. U22) is resting on the tip of the fast-idle cam. At this point an extra load will be felt due to the action of the extended fast-idle plunger ceasing.
5. Start the engine, if the speed is outside a range of 850 r.p.m. to 900 r.p.m. stop the engine, open the throttles to gain access to the adjusting screw and turn the screw approximately ⅛ turn, for each 20 r.p.m. required. Tighten the lock-nut.
6. Start the engine and again check the fast-idle speed.
7. When the engine speed has been adjusted to within the prescribed limits open the throttles to release the fast-idle mechanism.
8. Stop the engine, disconnect the tachometer, remove the blank from the 'Y' piece connection at the cut-off solenoid and fit the E.G.R. signal pipe to the 'Y' piece connection. Fit the pressure tapping cap to the weakening device.

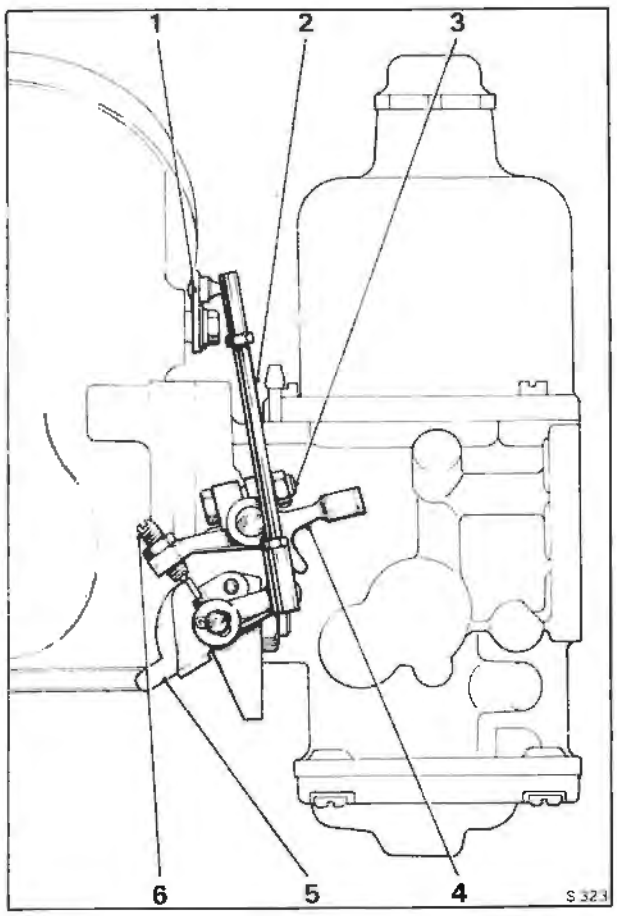

Fig. U22 Fast-idle mechanism

1 Control rod lever
2 Butterfly rod
3 Lever clamp bolt
4 'Fast-idle' lever
5 Cam
6 Adjusting screw

Choke stove pipe - To flow check

1. Ensure that the usual safety precautions are carried out (i.e. parking brake firmly applied, gear range selector lever in 'Park', etc.) and connect an impulse tachometer in accordance with the manufacturer's instructions.
2. Start and run the engine until normal operating temperature is attained. Stop the engine.
3. Disconnect the stove pipe union at the intake elbow (see Fig. U37) and connect a flowmeter (RH 8725) to the pipe via a connector (RH 8945). The flowmeter must be a rotameter type capable of measuring 2,9 cu.m/hr. (100 cu.ft/hr.).
4. Start and run the engine at idle speed (650 r.p.m.); observe the flowmeter, a correct reading is between 1,41 cu.m/hr. and 1,55 cu.m/hr. (50 cu.ft/hr. and 55 cu.ft/hr.).
5. If the flow is less than 1,41 cu.m/hr. (50 cu.ft/hr.) check the choke stove pipe unions for leaks.
6. If the flow is in excess of 1,55 cu.m/hr. (55 cu.ft/hr.), fit a new restrictor in the choke bi-metal housing (see Chapter K).

Carburetters

Two S.U. HIF7 (Horizontal Integral Float Chamber) carburetters with 4,76 cm. (1.875 in.) choke bores (see Fig. U23) are fitted to the engine on a central 'tee' piece which is mounted over an eight branch induction manifold.

This type of carburetter automatically adjusts both its choke and jet area to meet the demand of the engine which is dependent on engine speed and loading. As air is drawn through the carburetter, the piston acting as an obstruction will cause a depression to be formed in the area between the throttle and the piston. This depression is communicated by means of transfer holes in the base of the piston to the area above the piston, causing an upward force to be imposed on the piston. The piston

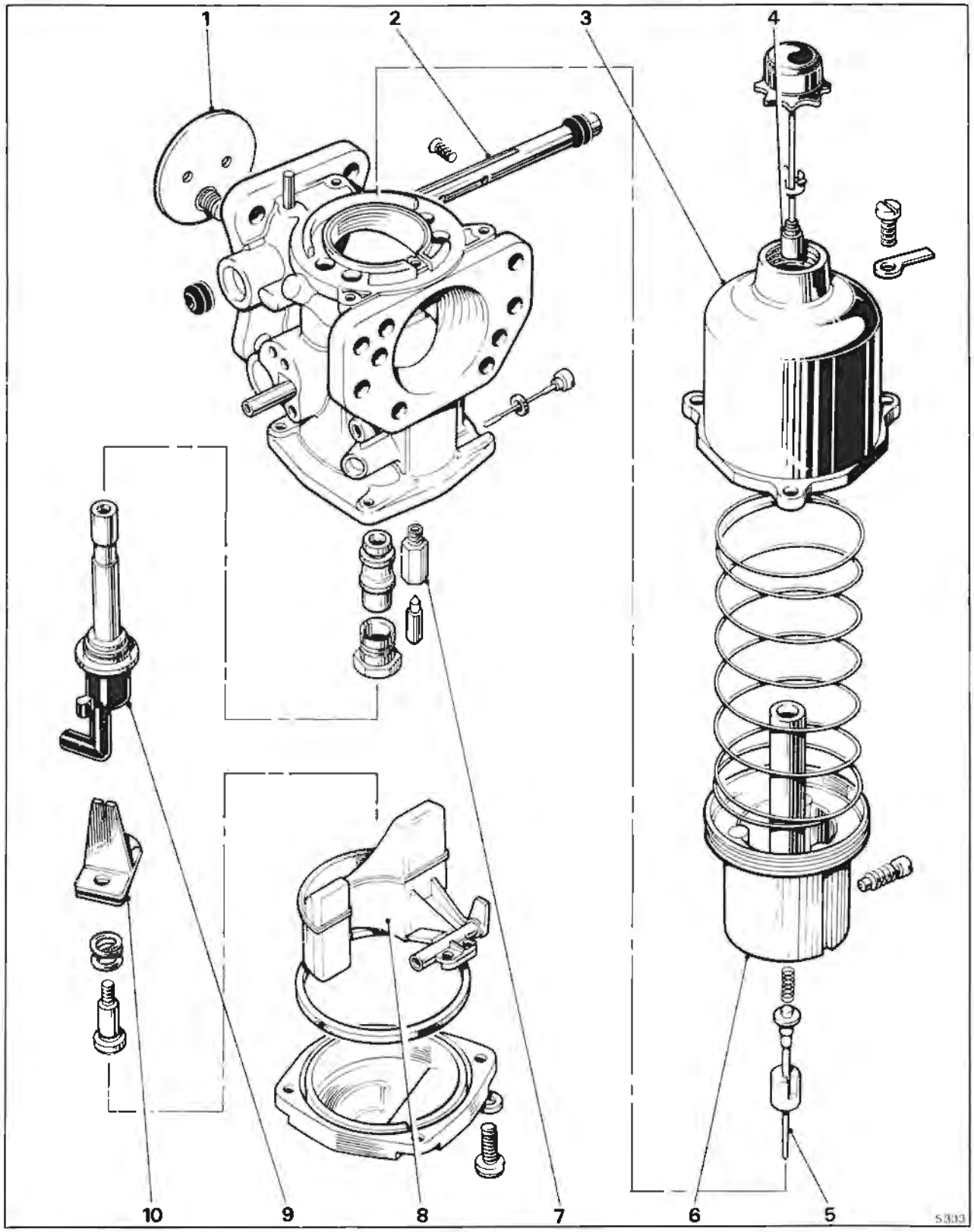

Fig. U23 SU HIF7 carburetter

1 Throttle disc with overrun valve
2 Throttle spindle
3 Suction chamber
4 Piston damper
5 Jet needle
6 Piston
7 Float needle valve assembly
8 Float
9 Jet assembly
10 Bi-metal jet lever

Printed in England
© Rolls-Royce Motors Limited 1979

will rise in response to this force relieving the depression in the area between the piston and the throttle as it does so until a point is reached where the force acting on the piston is balanced by the weight of the piston and the load exerted by the piston spring.

A spring-loaded jet needle is fitted to the carburetters, which is biased downstream and operates in a 2,54 mm. (0.10 in.) diameter main jet; this jet does not require centralising.

Float chamber (see Fig. U24)
The float chamber is incorporated in the main body casting; access to the chamber is obtained by removing the bottom cover-plate (item 7). The moulded float (item 10) is shaped so that it surrounds the jet tube and is pivoted along a line parallel to the inlet flange. The float is retained by a spindle (items 2 and 9) which screws into the body casting.

Entry of the fuel into the float chamber is via a brass tube (item 1) in the side of the carburetter body to a needle valve assembly (item 3).

The jet is pressed into the top of an aluminium tube which is in turn pressed into a plastic moulding (item 8). This hollow moulding known as the jet head is open at its lower end allowing fuel to enter the jet tube.

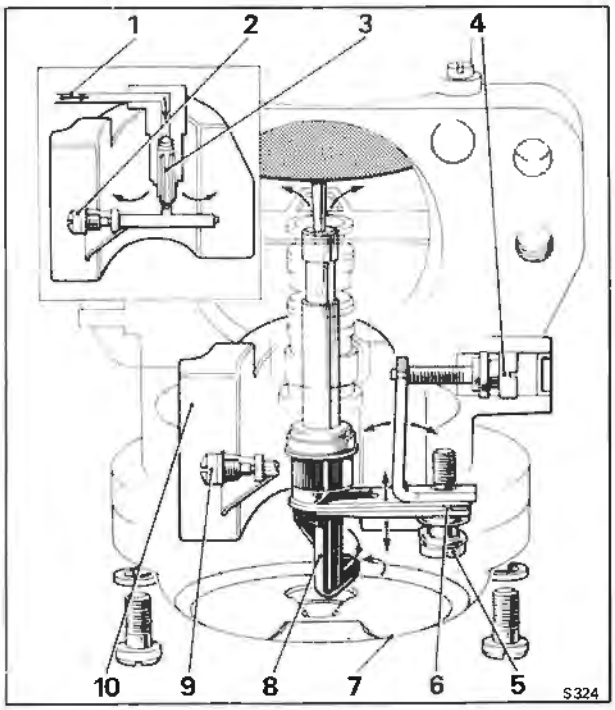

Fig. U24 Float chamber layout
1 Fuel inlet
2 Float fulcrum screw
3 Needle valve
4 Jet adjusting screw
5 Bi-metal pivot screw
6 Bi-metal assembly
7 Bottom cover-plate
8 Jet head
9 Float fulcrum screw
10 concentric float

Mixture adjustment (see Fig. U24)
The jet tube of the HIF type carburetter is moved in the vertical plane to provide mixture adjustment.

The jet adjustment assembly is comprised of a right-angled adjusting lever of unequal length arms riveted to a bi-metal blade (item 6).

The blade is cut out to accept the jet head (item 8) and the shape of the jet head is formed so that any movement of the bi-metal blade is transmitted to the jet head, moving it in the vertical plane.

The right-angled adjusting lever and bi-metal blade (item 6) are attached to the body casting by a spring-loaded retaining screw (item 5) positioned in the short arm of the lever. This attachment allows the adjusting lever to be pivoted at the outer edge of its short arm and is loaded by the spring towards the jet adjusting screw (item 4).

The jet adjusting screw is located at the outer end of the long arm of the adjusting lever; screwing the adjusting screw inward will lower the jet, enriching the mixture and unscrewing the adjusting screw will allow the spring to return the lever together with the jet, weakening the mixture.

After the mixture has been set the jet adjustment can be sealed by fitting a plug into the jet adjusting screw recess of the carburetter body.

HIF7 carburetters are set and balanced by accurate flow measuring techniques during manufacture and therefore, adjustment of the mixture screws should not be necessary.

Fuel temperature compensation (Viscosity compensator) (see Fig. U24)
This device alters the jet position in relation to the metering needle to compensate for changes in fuel viscosity which take place with changes in fuel temperature.

When the fuel temperature rises, the viscosity is lowered, and in an uncompensated assembly this would allow more fuel to flow for a given jet/needle relationship.

In the HIF jet assembly the jet head is attached to a bi-metal blade (item 6). This bi-metal is immersed in the fuel in the float chamber and will move in the vertical plane in response to changes in fuel temperature. The jet will be raised to a weaker position on the jet needle when the fuel temperature rises and will be lowered to a richer position when the temperature falls.

From this it will be seen that once the jet position has been selected by adjusting the mixture screw, alterations of fuel temperature will bring about slight alterations in jet position to compensate for the change in fuel viscosity.

The effect of this device is that driveability is

improved over wide ranges of temperature, and that exhaust emissions can be kept within closer limits during cold starting and the warm-up period. Temperature compensation also allows carburetters to have the mixture setting pre-set and sealed before the car is delivered.

Overrun valves (see Fig. U25)
During overrun (i.e. when decelerating with the throttles closed), insufficient mixture is supplied to the engine to maintain satisfactory combustion. The overrun valves alleviate this condition by allowing some mixture to pass through the throttle plates (butterflies) at high inlet manifold depressions.

An overrun valve is fitted into the throttle plate of each carburetter.

An overrun valve consists of a small disc retained in each throttle plate by a spring loaded plunger. Under normal conditions the disc is seated against the throttle plate. When the throttle is suddenly closed, the increased inlet manifold depression lifts the disc from its seating and allows a metered quantity of air/fuel mixture to pass through the throttle plate.

The action of the overrun valves maintains satisfactory combustion on overrun, thus reducing hydrocarbon emissions and controlling catalyst temperatures.

After the sudden closure of the throttles and as soon as the manifold depression falls, the overrun valve disc returns to its seat on the throttle plate.

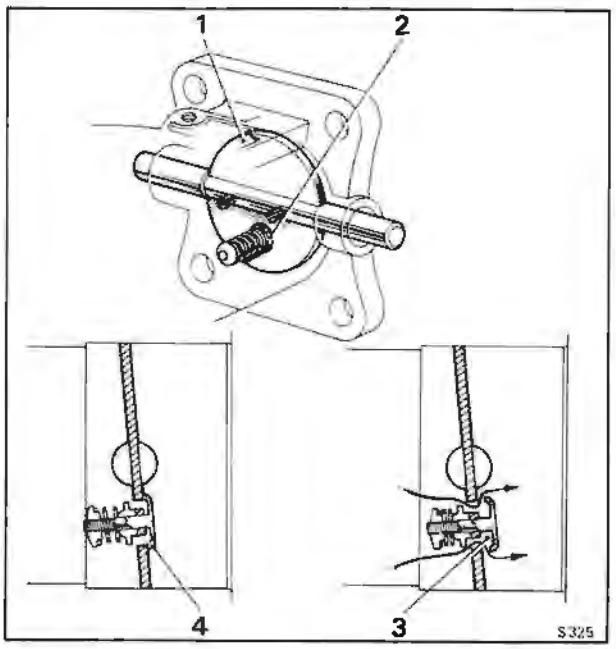

Fig. U25 Overrun valve
1 Throttle butterfly disc
2 Overrun valve
3 Overrun valve open
4 Overrun valve closed

Spring-loaded jet needle (see Fig. U26)
The jet needle fitted to each carburetter is biased towards a predetermined position in the jet orifice by means of a spring-loaded fixing.

The shoulder of the needle abuts a protrusion formed on the needle guide. Under the pressure of a spring the needle is held permanently in one position relative to the air flow. As the needle is retained in a predetermined position no jet centring is required and a non-centreable jet bearing is fitted. To ensure correct fitting,the needle guide carries an etched alignment mark which should be positioned mid-way between the two cut outs in the piston.

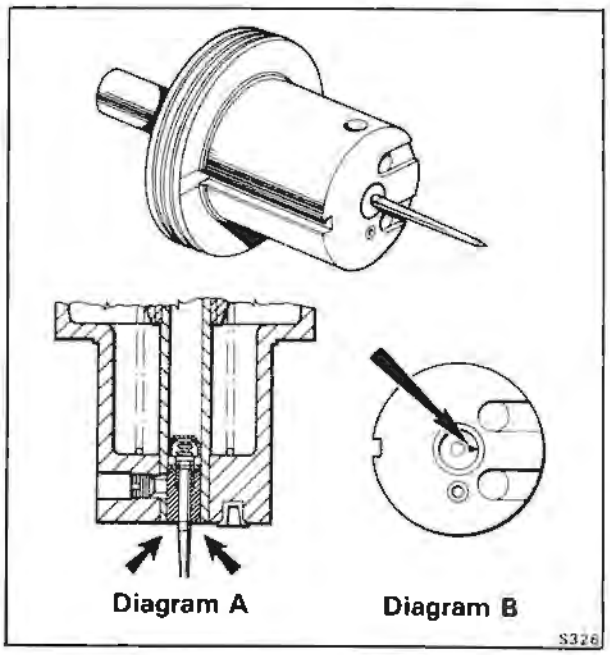

Fig. U26 Spring-loaded jet needle
Diagram A
Needle guide height setting
Diagram B
Needle guide alignment setting

Carburetter fuel filter
A filter element is fitted into the fuel filter housing attached to the side of each carburetter. At the intervals specified in the Service Schedules these two filter elements should be discarded and new ones fitted as described in Chapter K.

Carburetters and air horns assembly - To remove
Before commencing to remove the carburetters observe the following points.
1. When disconnecting the various hoses, pipes and wiring connections ensure that they are suitably labelled to assist identification when assembling.

Printed in England
© Rolls-Royce Motors Limited 1979

2. Ensure that all open ends of pipes, hoses, etc. are suitably blanked off to prevent the ingress of dirt, etc.
3. Ensure that the usual safety precautions are carried out (i.e. parking brake firmly applied, gear range selector lever in 'Park', battery disconnected, etc.).

To remove the carburetter and air horn assembly proceed as follows
From 'A' bank side
1. Remove the air intake elbow casting (refer to Air intake - To remove in Chapter K).
2. Disconnect the fuel feed and recirculation pipes adjacent to 'A' bank carburetter.
3. Withdraw the electrical connections from the speed control bellows assembly. Disconnect the chain link from the throttle linkage to the speed control unit. Withdraw the vacuum hose from the speed control unit. Unscrew and remove the 'steady' bolt from the speed control bracket.
4. Remove the split pin, washer and clevis pin from the throttle linkage just forward of 'A' bank carburetter.

From 'B' bank side
5. Disconnect the E.G.R. feed pipe upper joint (refer to E.G.R. feed pipe - To remove, Section U2).
6. Unscrew the union on the choke stove pipe at the bi-metal housing.
7. Unscrew the fuel feed pipe union at 'B' bank carburetter filter housing.
8. Remove the crankcase emission control system pipe from the choke butterfly housing; withdraw the housing from the end of the pipe.
9. Disconnect the electrical cables to the choke solenoid at the 'snap connector' joints, adjacent to the butterfly housing.
10. Disconnect the electrical connections to the anti 'run-on' solenoid and the Weakening device and E.G.R. cut-off solenoid.
11. Detach the following hoses from the weakening device.
a. the hose from the float chamber vent valve
b. the hose from the fuel receiver
c. the hose to the air filter
d. the hose from the venturi chamber
These hoses are labelled A, H, G and D in Figure U4.
12. Disconnect the purge line at the restrictor.
13. Unscrew the 7/16 in. A/F nut from the dipstick bracket; collect the washer.
14. Unscrew the ½ in. A/F setscrew from the centre of the carburetter 'tee' piece; withdraw the setscrew and washer.
15. Carefully withdraw the carburetters and air horn assembly, ensuring that no pipes, hoses or electrical items are still connected.

Carburetters and air horns assembly - To fit
Fit the carburetters by reversing the procedure given for their removal, noting the following points.
1. Ensure that all joint faces are clean.
2. Fit new gaskets.

Carburetters - To remove
Remove the carburetters and air horn assembly from the car (refer to Carburetters and air horn assembly - To remove) and then, remove the carburetters from the air horns assembly as follows.

'A' bank carburetter
1. Unscrew the two ½in. A/F nuts securing the air horn to 'A' bank carburetter.
2. Withdraw the bolts, collect the washers and the full throttle stop bracket (if fitted).
3. Move the air horn flange upwards away from the carburetter.
4. Unscrew the union from the fuel filter.
5. Detach the vacuum supply hose from on top of the carburetter body adjacent to the carburetter and 'tee' piece flange.
6. Detach the hose from the side of the carburetter that connects to the fuel receiver in the weakening device.
7. Completely remove the two pinch bolts securing the throttle levers to the 'A' and 'B' bank carburetter butterfly spindles, remove the levers.
8. Unscrew the nut and withdraw the pinch bolt securing the fast-idle lever to the carburetter spindle; withdraw the lever.
9. Unscrew the four half-nuts that retain the carburetter to the 'tee' piece flange; collect the washers.
10. Withdraw the carburetter and collect the gasket.

'B' bank carburetter
1. With a screwdriver, unscrew and remove the two screws securing the solenoid platform in position adjacent to 'B' bank carburetter. One screw is located on the air horn and has a nut underneath, and the other screw is situated in the filter housing.
2. Unscrew the ½ in. A/F nuts from the bolts that retain the air horn to the carburetter flange; withdraw the bolts and collect the washers. Move the solenoid platform away from the carburetter.
3. Detach the hose from the side of the carburetter to the fuel receiver in the weakening device.
4. Carefully ease the air horn upwards away from the carburetter.
5. Completely remove the two pinch bolts securing the throttle levers to the 'A' and 'B' bank carburetter butterfly spindles,remove the levers.
6. Detach the vacuum supply hose from on top of the carburetter body adjacent to the carburetter and 'tee' piece flange.
7. Unscrew the remaining union from the fuel filter housing.
8. Unscrew the four half-nuts that retain the carburetter to the 'tee' piece flange; collect the

washers.
9. Withdraw the carburetter and collect the gasket.

Dismantling of the components within the carburetters is not recommended as all carburetters are set and balanced by accurate flow measuring techniques during manufacture.

In certain isolated instances however, it maybe necessary to dismantle the carburetters and under these conditions the following procedure should be carefully followed.

Carburetter - To dismantle
Upper half (see Fig. U27)
1. Thoroughly clean the outside of the carburetter.
2. Unscrew the suction chamber retaining screws and remove the identity tag.
3. Lift the chamber assembly vertically from the body without tilting it.
4. Hold the piston firmly and pull the suction chamber, taking care not to bend the damper rod, until the damper retainer is freed from the piston rod. Unscrew and remove the damper.
5. Remove the piston spring, lift out the piston assembly and empty the oil from the piston rod.
6. Note the position of the needle guide etch mark in relation to the piston transfer holes for correct reassembly and unscrew the needle guide locking screw.
7. Withdraw the needle, guide and spring.

Lower half (see Fig. U28)
8. Mark the bottom cover-plate and body to ensure correct reassembly, unscrew the retaining screws and remove the cover complete with the sealing ring.
9. Remove the jet adjusting screw complete with 'O' ring.
10. Remove the jet adjusting lever retaining screw and spring.
11. Withdraw the jet complete with adjusting lever and disengage the lever.
12. Remove the float pivot spindle and aluminium washer.
13. Withdraw the float.
14. Remove the needle valve and unscrew the valve seat.
15. Unscrew the jet bearing locking nut and withdraw the bearing complete with fibre washer.

Throttle disc assembly (see Fig. U29)
16. Remove the throttle disc retaining screws.
17. Close the throttle and mark the position of the throttle disc in relation to the carburetter flange. **Do not mark the disc in the vicinity of the overrun valve.** Open the throttle and carefully withdraw the disc from the throttle spindle taking care not to damage the overrun the valve.
18. Withdraw the throttle spindle and remove the seals, noting the way it is fitted in relation to the carburetter body to ensure correct reassembly.

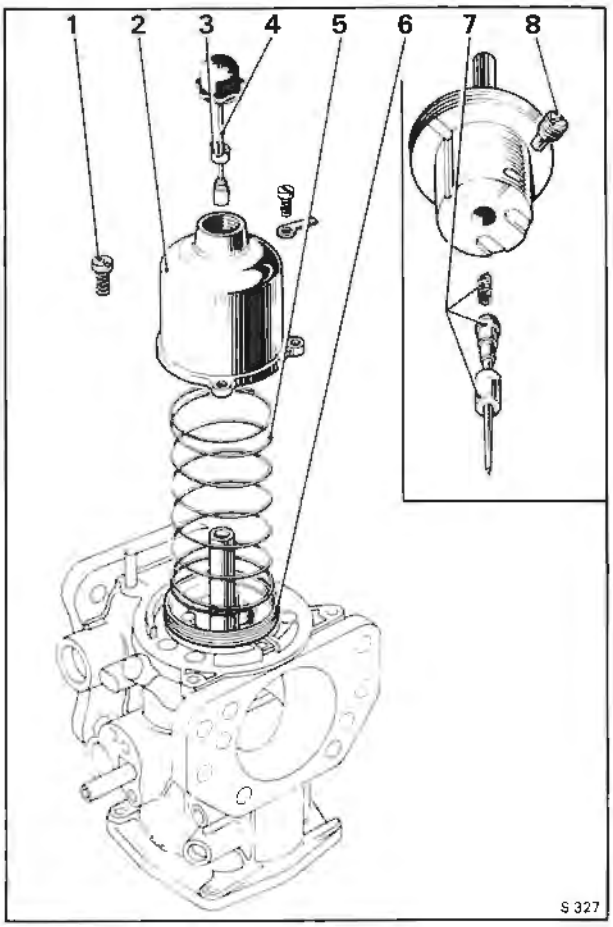

Fig. U27 Dismantling a carburetter (Upper half)
1 Suction chamber retaining screw
2 Suction chamber
3 Damper retainer (Piston ball race clip)
4 Damper rod
5 Spring
6 Piston
7 Spring-loaded needle assembly
8 Needle guide locking screw

Carburetter - To inspect
1. Examine the throttle spindle and its bearings in the carburetter body; check for excessive play and fit new parts if necessary.
2. Examine the float needle and seating for damage and excessive wear; fit new parts if necessary.
3. Examine all rubber seals and 'O' rings for damage or deterioration; fit new parts if necessary. **The cover-plate sealing ring must be renewed.**
4. Examine the carburetter body for cracks and damage and for security of the brass connections and the piston key.
5. Clean the inside of the suction chember and piston rod guide with fuel or methylated spirit (denatured alcohol) and wipe dry. **Abrasives must not be used.**

Printed in England
© Rolls-Royce Motors Limited 1979
January 1979
TSD 4200
(Japan
1979 Model year)

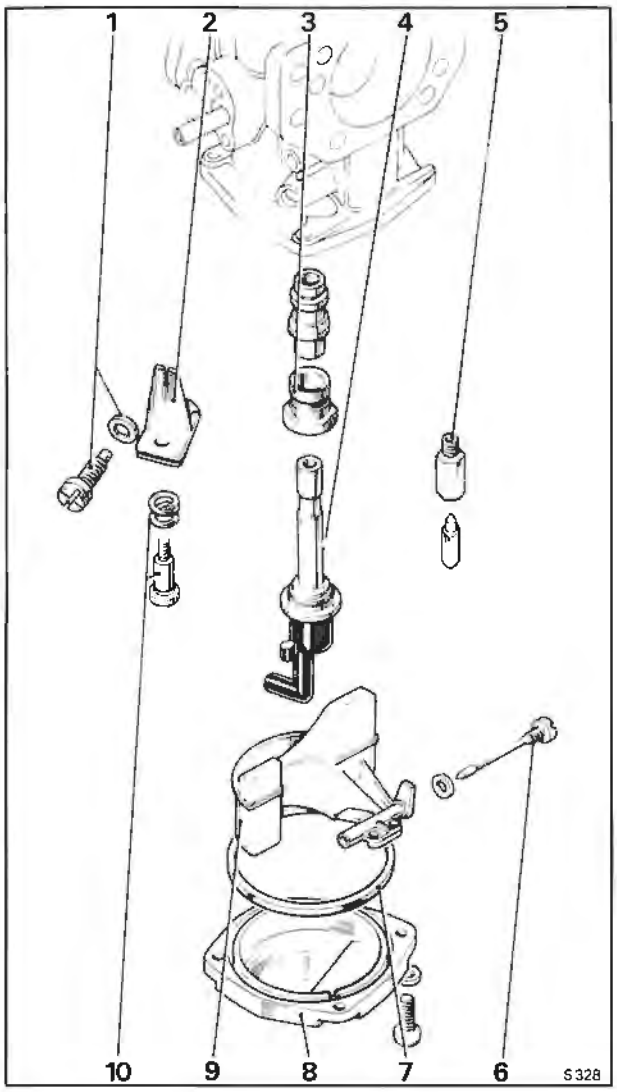

Fig. U28 Dismantling a carburetter (Lower half)
1 Jet adjusting screw and 'O' ring
2 Jet adjusting lever
3 Jet bearing assembly
4 Jet
5 Float chamber needle valve
6 Float pivot spindle
7 Sealing ring
8 Bottom cover-plate
9 Float
10 Jet lever adjusting screw

6. Examine the suction chamber and piston for damage and signs of scoring.
7. Check that all the balls are in the piston ball race (2 rows, 6 per row). Fit the piston into the suction chamber, without the damper and spring, hold the assembly in a horizontal position and spin the piston. The piston should spin freely in the suction chamber without any tendency to stick.

Carburetter - To assemble
Assemble the carburetter by reversing the

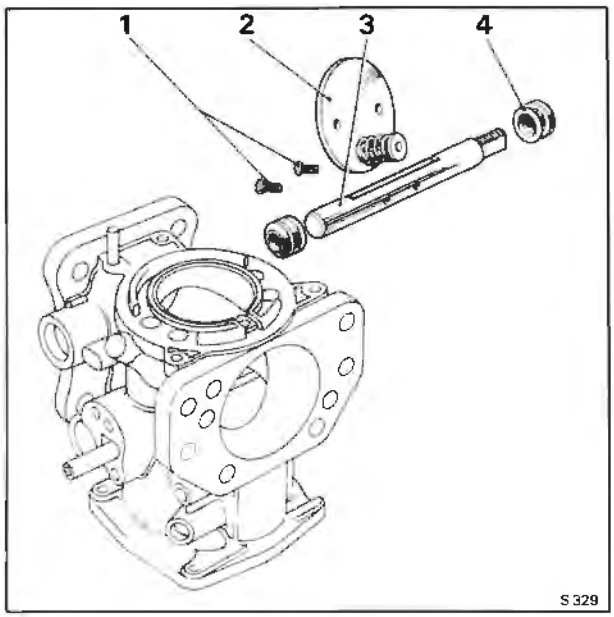

Fig. U29 Dismantling a carburetter (Throttle disc assembly)
1 Throttle disc retaining screws
2 Throttle disc assembly
3 Throttle spindle
4 Seal

procedure given for removal, noting the following points.
1. Ensure that the throttle disc is fitted in its original position.
2. New throttle disc retaining screws must be used when refitting the disc. Ensure that the throttle disc is correctly positioned and closes correctly before tightening the retaining screws. Spread the split ends of the screws sufficiently to prevent turning.
3. Position the throttle spindle end seals just below the spindle housing flange.
4. When fitting the jet assembly to the adjusting lever ensure that the jet head moves freely in the bi-metal cut out.
5. Fit a new float pivot spindle sealing washer or anneal the existing washer.

Check the level of the float in the float chamber (refer to Carburetter float level - To set).
6. Check that the small diameter of the jet adjusting screw engages the slot in the adjusting lever and set the jet 3,05 mm. (0.12 in.) below the bridge of the body.
7. Ensure that the needle guide etch mark aligns correctly with the piston transfer holes. After fitting the needle assembly, check that the shoulder of the guide aligns with the face of the piston (see Fig. U26).
8. To prevent the piston spring from being 'wound up' during reassembly, temporarily fit the piston and suction chamber, less the piston spring,

to the body and pencil mark their relative positions to each other. Fit the spring to the piston, hold the suction chamber above the piston align the pencil marks and lower the chamber over the spring and piston.

Before assembly ensure that the damper retainer (piston ball race clip) is refitted by pressing it fully into the piston rod (see Fig. U30).

The damper retainer (piston ball race clip) can also be installed with the suction chamber fitted to the engine by using fitting tool RH 9086.

Carburetter float level - To set

1. Remove the carburetter from the engine.
2. Invert the carburetter.
3. Mark the bottom cover-plate and carburetter to ensure correct assembly, unscrew the retaining screws and remove the cover complete with the sealing ring.

A new rubber sealing ring must be installed when fitting the cover-plate.

4. Ensure that the float chamber needle valve is held in the closed position by the weight of the float only.
5. Check that the lowest point on the float (see Fig. U31) is either level with the float chamber face, or up to 1,52 mm. (0.060 in.) below.
6. If necessary, adjust the float position by carefully bending the brass pad.
7. Check that the float pivots correctly about the spindle.

Carburetter air valve damper - To top-up

The upper portion of the guide spindle, attached to the air valve piston in each carburetter, is hollow and is filled with the same type of oil as used in the engine.

1. Unscrew the damper cap and carefully raise the damper until the damper, **together with the air valve piston,** reach the top of their travel. Ensure that the retainer is not displaced from its position in the piston rod (see Fig. U30).
2. Holding the damper and piston in the raised position, fill the recess in the damper retainer (piston ball race clip) with clean engine oil.
3. Lower the damper until the cap contacts the neck of the suction chamber, then carefully raise the damper and piston again and check the oil level; this is correct if the oil level is just visible in the bottom of the recess in the damper retainer (piston ball race clip). If the oil level is not visible, repeat the topping-up procedure until the oil level is correct.
4. Check that the damper retainer (piston ball race clip) is still in its correct position in the piston rod as shown in Figure U30, then lower the damper and screw the damper cap firmly into position.

If the damper retainer (piston ball race clip) becomes inadvertently displaced during the topping-up procedure or if the damper should be removed from the piston, do not fit the damper cap or run the engine until the retainer has been returned to its correct position in the piston rod. The special tool RH 9086 should be used to fit the damper retainer (piston ball race clip).

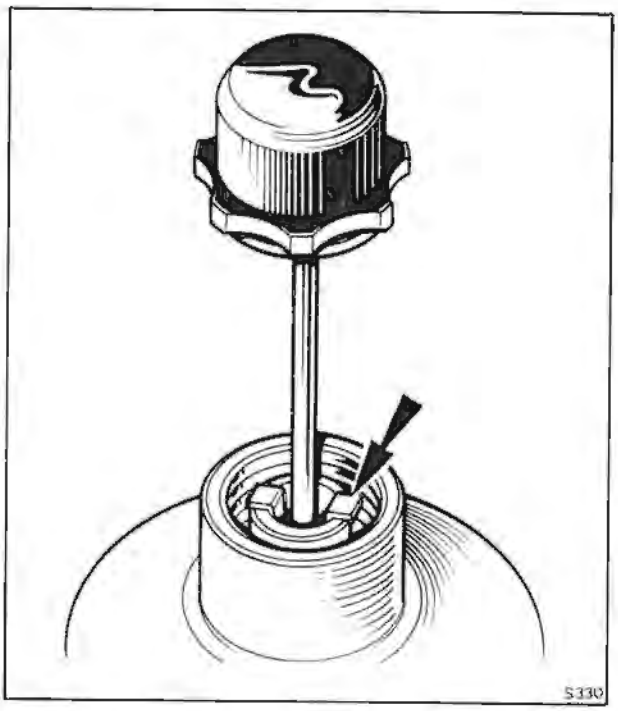

Fig. U30 Position of damper retainer

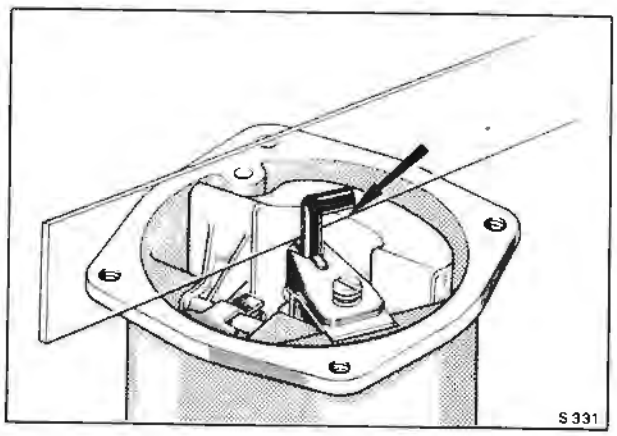

Fig. U31 Checking the float level

Carburetter throttle linkage - To fit and set left-hand drive cars (see Fig. U32)

1. Assemble 'A' bank and 'B' bank throttle levers (items 7 and 11) onto the carburetter spindles.
2. Fit the setting jig (RH 8880) into position on the throttle levers.
3. Fully close 'B' bank carburetter butterfly (item 8).

Printed in England
© Rolls-Royce Motors Limited 1979

4. Tighten the pinch bolt securing 'B' bank throttle lever.
5. Fully close 'A' bank carburetter butterfly (item 2).
6. Tighten the pinch bolt securing 'A' bank throttle lever.
7. Fit the throttle spring (item 5) to the throttle levers.
8. Remove the setting jig from the throttle levers.
9. Fit the cross link guide bracket (item 10) to the carburetter 'tee' piece (item 6). Secure in position with two small screws which should be 'locked' using two tabs washers.
10. Fit the cross link (item 9) and the eccentric throttle adjuster (item 4) onto the throttle levers, ensuring that both throttle butterflies are closed when adjusting and tightening the eccentric adjuster.
Note
The eccentric pin should be set in the lowest position.
11. Ensure that the cross link guide (item 10) has a clearance of between 1,27 mm. (0.050 in.) and 1,78 mm. (0.070 in.) with the cross link. If necessary bend the guide to give these clearances.
12. Check that the throttle linkage moves freely.
13. Fit the idle stop screw (item 3) and lock-nut; adjust until the screw just contacts the stop bracket with the throttle butterflies remaining in the closed throttle position.
14. Screw down the idle stop screw ½ turn.
15. Connect one end of the drive link (item 1) to the 'B' bank throttle lever and the other end, to the manifold shaft lever (item 13).
16. Operate the linkage to ensure free movement.
17. With the throttles in the closed position check that the relationship between the 'A' bank control shaft to control rod lever (item 12) on the rear of the manifold shaft and the front manifold shaft lever (item 13) is as illustrated in Figure U32. Tighten the securing bolts on both levers.
18. Operate the mechanism; check for freedom of movement within the linkage and also clearance with the various engine components.
19. To set the remainder of the linkage from the control rod lever on the rear of the manifold shaft to the accelerator pedal refer to Chapter T - Transmission and Chapter K - Fuel system.

Carburetter throttle linkage - To fit and set right-hand drive cars (see Fig. U33)
1. Assemble 'A' bank and 'B' bank throttle levers (items 6 and 11) onto the carburetter spindles.
2. Fit the setting jig (RH 8880) into position on the throttle levers.
3. Fully close 'B' bank carburetter butterfly (item 7).
4. Tighten the pinch bolt securing 'B' bank throttle lever.
5. Fully close 'A' bank carburetter butterfly (item 2).

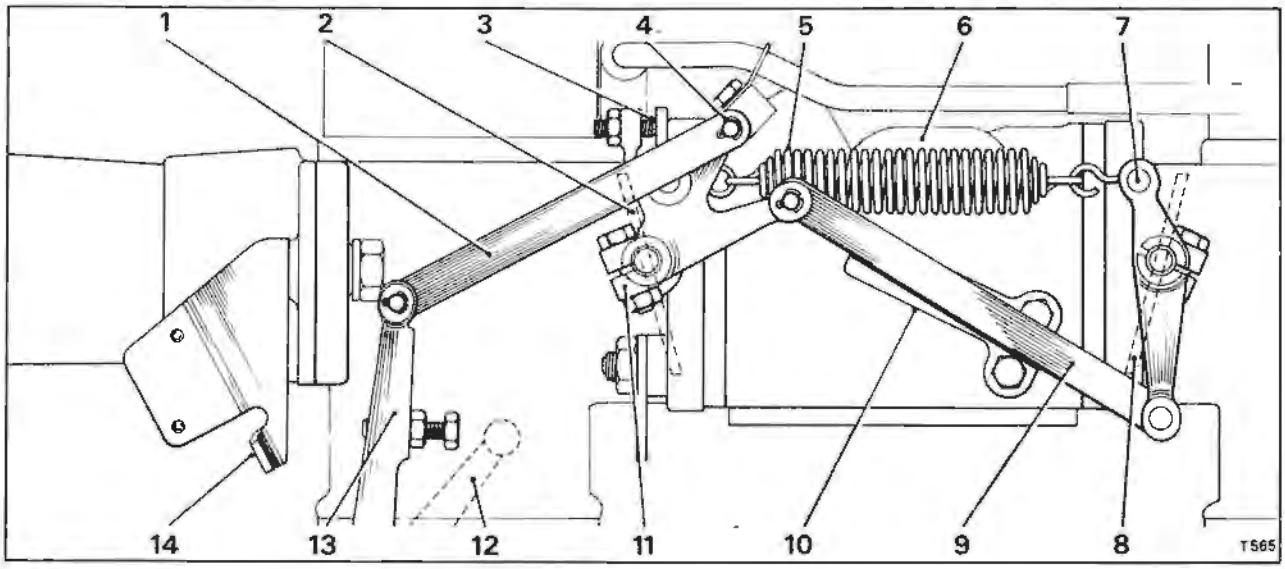

Fig. U32 Carburetter throttle linkage - left-hand drive cars
1 Drive link
2 'A' bank carburetter throttle butterfly
3 Idle stop screw
4 Eccentric throttle adjuster
5 Throttle spring
6 Carburetter 'tee' piece
7 'B' bank carburetter throttle lever
8 'B' bank carburetter throttle butterfly
9 Cross link
10 Throttle cross link guide bracket
11 'A' bank carburetter throttle lever
12 Rear manifold shaft lever
13 Front manifold shaft lever
14 Full throttle stop

6. Tighten the pinch bolt securing 'A' bank throttle lever.
7. Fit the throttle spring (item 3) to the throttle levers.
8. Remove the setting jig from the throttle levers.
9. Fit the cross link guide bracket (item 9) to the carburetter 'tee' piece (item 5). Secure in position with two small screws which should be 'locked' using two tabs washers.
10. Fit the cross link (item 10) and the eccentric throttle adjuster (item 4) onto the throttle levers, ensuring that both throttle butterflies are closed when adjusting and tightening the eccentric. adjuster.

Note
The eccentric pin should be set in the lowest position.

11. Ensure that the cross link guide (item 9) has a clearance of between 1,27 mm. (0.050 in.) and 1,78 mm. (0.070 in.) with the cross link. If necessary bend the guide to give these clearances.
12. Check that the throttle linkage moves freely.
13. Fit the idle stop screw (item 8) and lock plate; adjust until the screw just contacts the stop bracket (item 9) with the throttle butterflies remaining in the closed throttle position.
14. Screw down the idle stop screw ½ turn.
15. Connect one end of the drive link (item 12) to the 'B' bank throttle lever and the other end, to the manifold shaft lever (item 13).
16. Operate the linkage to ensure free movement.
17. With the throttles in the closed position check that the 'A' bank control shaft to control rod lever (item 14) on the rear of the manifold shaft is in line with the front manifold shaft lever (item 13). Tighten the securing bolts on both levers.
18. Operate the mechanism; check for freedom of movement within the linkage and also clearance with the various engine components.
19. To set the remainder of the linkage from the control rod lever on the rear of the manifold shaft to the accelerator pedal refer to Chapter T - Transmission and Chapter K - Fuel system.

Carburetters - To set

The carburetters fitted to these cars are adjusted at the factory using special equipment to ensure that their settings comply with the current emission control regulations.

Under normal circumstances the carburetters should not require adjustment in service.

If however, adjustment is found necessary due to inadvertent disturbance or replacement of a component set the carburetters by carrying out the following operations in the sequence given.

a. Set throttle linkage and temporarily set engine idle speed. Check linkage clearances.
b. Set cold start fast-idle cam.
c. Tune carburetters.
d. Set cold start fast-idle speed.

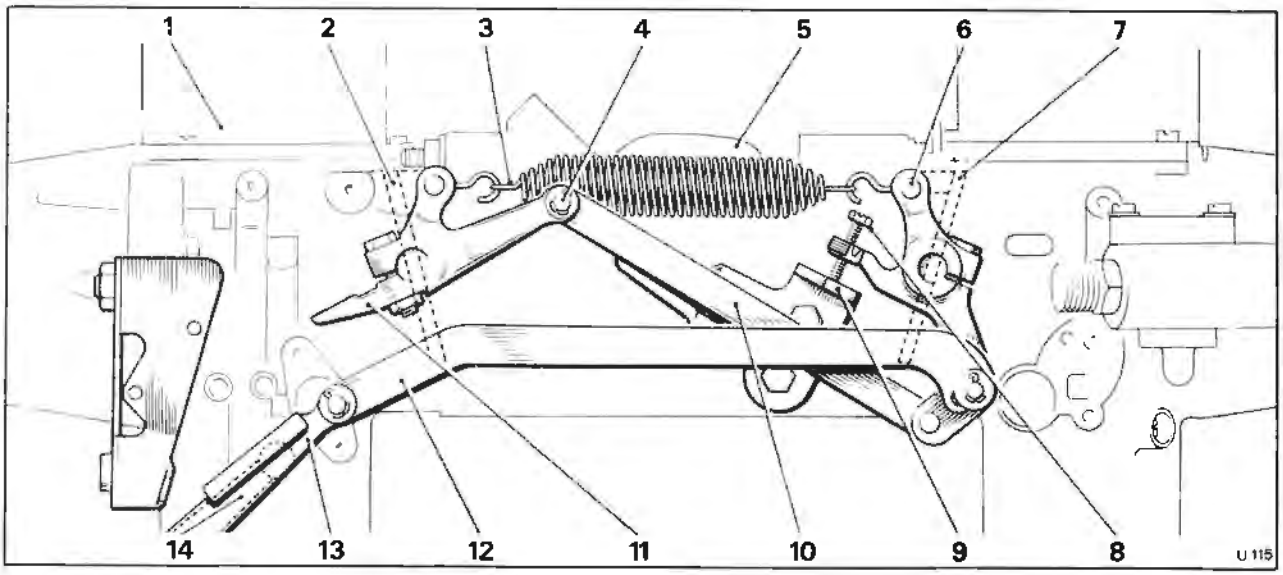

Fig. U33 Carburetter throttle linkage - right-hand drive cars

1 'A' bank carburetter
2 'A' bank carburetter throttle butterfly
3 Throttle spring
4 Eccentric throttle adjuster
5 Carburetter 'tee' piece
6 'B' bank carburetter throttle lever
7 'B' bank carburetter throttle butterfly
8 Idle stop screw
9 Throttle cross link guide bracket
10 Cross link
11 'A' bank carburetter throttle lever
12 Drive link
13 Front manifold shaft lever
14 Rear manifold shaft lever

Printed in England
© Rolls-Royce Motors Limited 1979
January 1979
TSD 4200
(Japan
1979 Model year)

e. Set the kickdown and E.G.R. cut-out micro-switch.
f. Set full throttle stop (if fitted).

Carburetter tuning

Preliminary checks

Before tuning the carburetters the following checks should be carried out.

Ensure that the vehicle is in 'Park', the parking brake firmly applied and that the gear range actuator thermal cut-out has been removed from the main fusebox.

1. Check the condition of the sparking plugs.
2. Check the ignition timing.
3. Check the flow through the choke stove pipe.
4. Check the entire induction system for air leaks.
5. Check the purge line flow rate.
6. Ensure that the air conditioning system is switched off.
7. Start the engine and warm up; allow to run for at least 5 minutes after the thermostat has opened.
8. Stop the engine, ensure that the choke butterfly valve is fully open and the choke fast-idle off.
9. Connect an electric impulse tachometer in accordance with manufacturer's instructions.
10. Check the float chamber depression.
11. Check the exhaust gas recirculation system for correct operation.
12. Check and set the full throttle exhaust gas recirculation cut-out micro-switch situated under the accelerator pedal.

Carburetter idle air balance

1. Ensure that the usual safety precautions are carried out (i.e. parking brake firmly applied, gear range selector lever in Park, etc.) and connect an impulse tachometer in accordance with the manufacturer's instructions.
2. Disconnect the speed control chain.
3. Start and run the engine until normal operating temperature is attained.
4. Stop the engine.
5. Fit the dial gauges RH 8841 with RH 9105 (kit to convert dial gauges to fit the HIF7 carburetters) to the carburetter dashpots in place of the dampers.
6. Zero the gauges with the engine stopped and lightly tighten the gauge clamp screws.
7. Start and run the engine at the idle speed setting (650 r.p.m.); adjust the carburetter piston lifts to be equal (without 10%) using the eccentric adjuster (see Figs. U32 and U33).
8. The average piston lift reading should now be between 2,03 mm. and 2,54 mm. (0.080 in. and 0.100 in.).

If the idle speed piston lift is over 2,54 mm. (0.100 in.) check the ignition timing at idle as this condition may result in unsatisfactory driveability.

9. Stop the engine and remove the impulse tachometer.
10. Remove the dial gauges and fit the carburetter dampers. **Ensure that the deshpot ball race clips (piston damper retainers) are fitted correctly and are pressed fully into the piston rod (see Fig. U30) using tool RH 9086.**
11. Connect the speed control chain and adjust to give a minimum slack condition, consistent with no impediment to the throttle lever to return to the idle speed position.

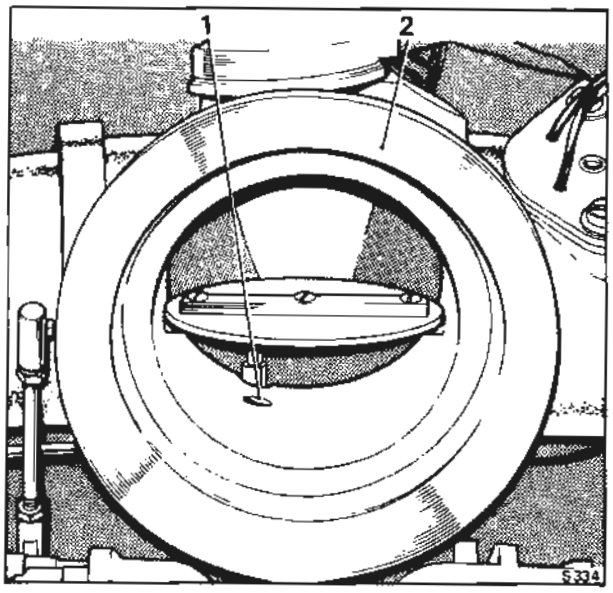

Fig. U34 Hot idle mixture compensator feed
1 Hot idle compensator feed
2 Air intake butterfly housing

Carburetter mixture strength - To set

1. Ensure that the usual safety precautions are carried out (i.e. parking brake firmly applied, gear range selector lever in Park, etc.) and connect an impulse tachometer in accordance with the manufacturer's instructions.
2. Remove the air intake, blank off the hot idle compensator feed drilling (see Fig. U34) and replace the intake.
3. Remove the air inlet hose from the air injection system pressure relief valve and fit a blank over the valve (a suitable blank may be produced from a short length of rubber hose with one end plugged).

Note

The air injection system is inoperative when the relief valve inlet air hose is disconnected from the air pump. The valve must be blanked to prevent air being drawn into the exhaust port by pulsations in the exhaust system since this would affect the idle CO reading.

4. Disconnect the E.G.R. cut-off solenoid to carburetter signal hose at the solenoid and blank the signal hose.
5. Unscrew and remove the pressure tapping cap from the weakening device.

6. Ensure that the engine has run for at least 25 minutes after the thermostat has opened.
7. Purge the engine at 2 000 r.p.m. in 'Neutral' for ¼ minute. Allow the engine speed to return to the idle setting and ensure that this is 650 r.p.m.; adjust if necessary using the idle stop screw.
8. Insert the probe of a CO meter into either exhaust system tailpipe and check the reading.
9. The CO meter reading should be 1% to 4%. If the reading is outside the limits quoted
a. Check for induction system leaks (if below 1%)
b. Check the choke stove and purge line flow rates.
10. If after carrying out Operation 8 the idle speed CO meter reading is still outside the limits quoted, the carburetter mixture screws (see Fig. U24) may be adjusted by equal amounts up to ½ turn in the same direction in order to achieve the mean limit of 2.5%. No attempt should be made to adjust the CO reading if it is in the region of 2.5% to 4.0%.
Note
a. Clockwise rotation of the mixture screws will richen the mixture.
b. The tuning operations should be carried out in the shortest possible time. If the time exceeds 3 minutes, run the engine at 2 000 r.p.m. in 'Neutral' for ¼ minute and then resume the tuning operations. Repeat this purging operation if a further period of 3 minutes is exceeded.

After purging the system gently tap around the neck of the carburetter suction chamber with a lightweight non-metallic object (i.e. the wooden handle of a small screwdriver), to eliminate carburetter piston hysteresis. The engine is to be run on Indolene Clear (HO) reference fuel or equivalent (Unleaded gasoline only).
11. Stop the engine.
12. Fit the pressure tapping cap to the weakening device, fit a new sealing washer if necessary.
13. Remove the blank from the air pressure relief valve and connect the feed hose from the air pump to the relief valve.
14. Remove the blank from the E.G.R. cut-off solenoid to carburetter signal hose and connect the hose to the solenoid.
15. Start the engine and check the idle speed, this should be 650 r.p.m.; adjust by means of the idle stop screw (refer to Section U6).
16. Stop the engine, remove the air intake and discard the blank from the hot idle compensator feed drilling; fit the air intake.
17. Remove the impulse tachometer.

Temperature controlled air intake

To ensure rapid warm-up and improve control of the air/fuel ratio a temperature controlled air intake is fitted (see Fig. U35).

A vacuum operated blending valve attached to the air cleaner assembly is controlled by a thermal sensor in the air intake elbow. This valve blends hot air from a pick-up point (scoop) adjacent to the exhaust manifold with cold air from under the front wing; thus maintaining a constant temperature of the intake air as it enters the carburetters.

All other details for the Temperature Controlled Air Intake System are given in Chapter K except for the checking procedure which is as follows.

Temperature controlled air intake - To check
1. Disconnect the air intake hose at the intake elbow and check that the correct temperature sensor is fitted, this should have a yellow spot on the top face.
2. Disconnect both vacuum hoses of the temperature sensor.
3. Place the open ends of both hoses together and check that there is no obvious air leak. Detach the open ends of the hoses from each other (i.e. release the vacuum sharply) and listen for the vacuum motor within the wing to 'click' open.
4. Reconnect the hoses.
Note
If there is an air leak or the operation of the temperature controlled air intake is suspect, remove the right-hand front underwing sheet and check the hose connection to the vacuum motor; also observe the operation of the temperature flap.

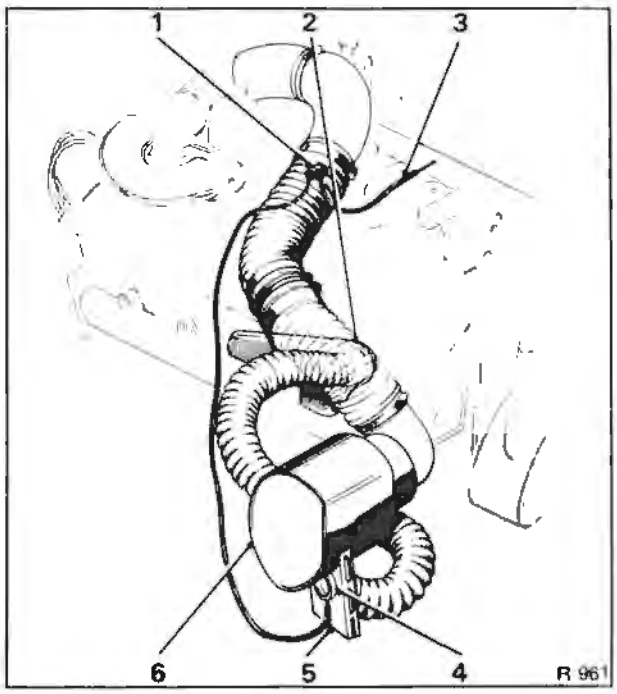

Fig. U35 Temperature controlled air intake
1 Temperature sensor
2 Hot air scoop
3 Manifold vacuum hose
4 Air blend valve
5 Cold air intake
6 Air cleaner/silencer

Printed in England
© Rolls-Royce Motors Limited 1979

Section U6

Ignition System

Printed in England

© Rolls-Royce Motors Limited 1980

Data

Ignition timing	9° B.T.D.C. (Initial static setting) 15° B.T.D.C. at 1 200 r.p.m. 7° - 13° B.T.D.C. at idle speed (650 r.p.m.) (Approach 1 200 r.p.m. from a higher speed).

Ignition control system

The ignition system utilises an Opus distributor (in which an oscillator pick-up and control unit replace the conventional contact breaker), a high load ignition coil and a ballast resistor. The control unit comprises an electronic oscillator, amplifier and power transistor.

A drum with eight ferrite rods (one per cylinder) moulded into the outer edge is mounted onto the distributor drive-shaft. As the drum rotates a voltage is created each time a ferrite rod passes the oscillator pick-up, this signal is then amplified and used to switch-off the normally conducting power transistor in the primary coil circuit,thus inducing a high voltage in the secondary winding which is distributed to the sparking plugs in the normal manner.

The distributor has a conventional centrifugal advance mechanism.

The Opus distributor provides increased accuracy of timing and increased service life before maintenance is required.

For the removal and fitting instructions of the ignition system components refer to Chapter M.

Ignition - To time (using a stroboscope)

The ignition is timed on A1 cylinder which is located at the front left-hand side of the engine (viewed from the front of the car).

Note

If the ignition timing is to be set, ensure that the sparking plugs are in good condition before running the engine; if they require cleaning or renewal the sparking plugs gap should be set to 0,9 mm. (0.035 in.).

1. To check the ignition timing commence by running the engine until normal operating temperature is attained and the choke fast-idle is in the off position. Switch off the engine.

2. Connect a stroboscope and a tachometer to the engine as described in the instructions supplied with the respective equipment.

3. Start the engine and adjust the throttle stop screw to give an idle speed of 1 200 r.p.m. When setting the engine idle speed reduce from a higher speed to 1 200 r.p.m.

4. Direct the flashing light of the stroboscope onto the crankshaft damper timing marks and timing pointer; the pointer is positioned on the right-hand side of the crankshaft damper when viewed from the front of the engine.

5. If the timing pointer does not coincide with the 15° B.T.D.C. mark on the crankshaft damper adjust the ignition timing as follows.

6. Release the clamp screw on the distributor and rotate the head of the distributor in the appropriate direction until the correct timing is obtained. Clockwise rotation of the distributor head advances the ignition and conversely anti-clockwise rotation retards the ignition. After adjustment has been carried out tighten the clamp screw and again check to ensure that the timing has not altered whilst tightening the clamp screw.

7. Set the engine idle speed to 650 r.p.m.

8. Direct the flashing light of the stroboscope onto the crankshaft damper timing marks and timing pointer. Check that the ignition timing is approximately 7° - 13° B.T.D.C.

9. Stop the engine and remove all the test equipment.

Setting the engine idle speed

Ensure that the engine is at normal operating temperature and that the choke fast-idle is in the off position.

The air conditioning system must be switched off and a tachometer connected to the engine in accordance with the manufacturer's instructions.

1. Stop the engine, remove the air intake and blank off the hot idle compensator feed drilling (see Fig. U34); replace the air intake.

2. Start the engine and, if necessary, adjust the engine idle speed to 650 r.p.m. using the throttle stop screw.

3. Stop the engine and remove the air intake. Remove the blank from the hot idle compensator feed drilling and fit the air intake. Detach the tachometer and stroboscopic timing equipment.

Distributor maintenance

The distributor requires no routine maintenance except that, at the mileage intervals specified in the Service Schedules, the moulded cover and H.T rotor arm should be removed and the spindle shaft bearings lubricated by inserting a few drops of

February 1980

TSD 4200
(Japan
1979 Model year)

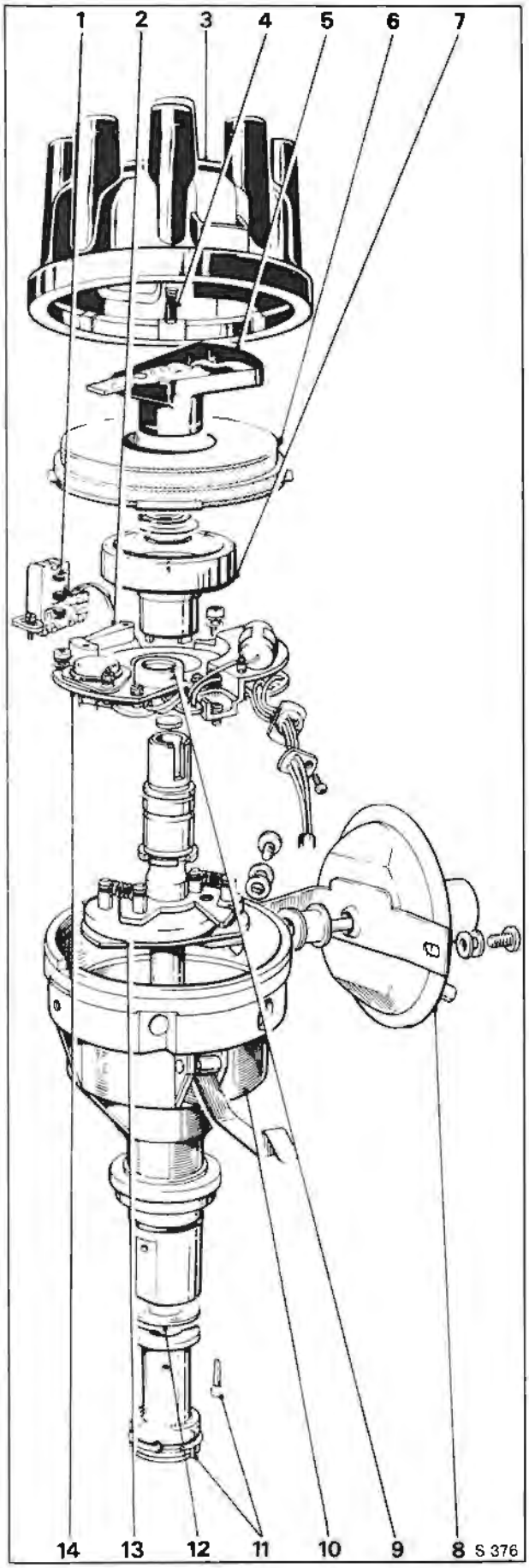

engine oil onto the felt pad. The automatic advance mechanism should also be lubricated at this time with a few drops of engine oil inserted through apertures in the base plate.

Sparking plugs

The sparking plugs approved for this car are Champion RN 14Y. Before fitting the plugs, set the gaps with the aid of a feeler gauge to 0,9 mm. (0.035 in.) and lightly smear the threads with 'Graphogen' grease.

Fig. U36 Ignition distributor

1 Pick-up module
2 Pick-up arm
3 Distributor cover (cap)
4 High tension brush and spring
5 Rotor arm
6 Flash over shield (dust cover)
7 Timing rotor
8 Vacuum advance unit
9 Control unit
10 Distributor body
11 Driving dog and pin
12 Thrust washer
13 Automatic advance mechanism
14 Electronic module assembly

Section U7

Electrical components

The electrical components described in this section would normally appear in Chapter M - Electrical system, however, as they are used in connection with the emission control system it is thought more practical to include the information in this Chapter.

The components concerned are as follows.

E.G.R. system and Weakening system cut-out switch
Anti 'run-on' solenoid
E.G.R. system and Weakening system cut-off solenoid
Kickdown and Full throttle E.G.R. cut-out micro-switch
Catalytic converter overheat warning system

E.G.R. system and Weakening system cut-out switch

The bi-metal cut-out switch is situated in the side of the air intake elbow adjacent to the choke stove take-off pipe and 'B' bank carburetter (see Fig. U37).

E.G.R. system and Weakening system cut-out switch - To remove

1. Withdraw the protective sheath and detach the electrical connections, noting the position of the connections to assist identification when assembling.
2. Unscrew and remove the three setscrews and spring washers.
3. Withdraw the cut-out switch.

E.G.R. system and Weakening system cut-out switch - To fit

Fit the cut-out switch by reversing the procedure given for removal.

1. Ensure that the gasket is in a good condition.
2. The setscrews must be fitted with spring washers.
3. The protective sheath must be fitted over the electrical connections.

E.G.R. system and Weakening system cut-out switch circuit wiring - To check

1. Detach the electrical connection from the E.G.R. and Weakening systems cut-out switch.
2. Attach one side of a test lamp to the White cable in the connection block and the other side to a good earth.
3. Switch on the ignition noting that the test lamp bulb illuminates.
4. Switch off the ignition noting that the test lamp bulb extinguishes.

E.G.R. system and Weakening system cut-out switch - To check

1. Withdraw the protective sheath from the electrical connections.
2. Do not disturb any wiring but connect both electrical connections via a test lamp.
3. Ensure that the engine is cold [i.e. intake air temperature below approximately 14° C. (57° F.)] and switch on the ignition.
4. Check that the test lamp bulb is illuminated.
5. Start and run the engine; as the engine warms-up [i.e. the inlet air temperature exceeds approximately 14° C. (57° F.)] the test lamp bulb should extinguish.

Anti 'run-on' solenoid

The anti 'run-on' solenoid is situated on a platform adjacent to 'B' bank carburetter; it is the foremost of the two solenoids fitted on the platform.

The use of low octane fuel often causes an engine to 'diesel' (i.e. to continue to run-on after the ignition has been switch off, particularly when the engine is hot). To prevent this an anti 'run-on' solenoid is fitted between the fuel receiver and the induction manifold (see Figs. U4 and U37). When the ignition is switched off the solenoid valve opens and connects the weakening system to the induction manifold, thus creating a high depression in the float chambers which cuts off the fuel supply.

Anti 'run-on' solenoid - To remove

1. Disconnect the rubber hose from either side of the solenoid.
2. Disconnect the two electrical leads at their solenoid connections.
3. Unscrew and remove the two screws situated one on either side of the solenoid body.
4. Withdraw the anti 'run-on' solenoid.

Anti 'run-on' solenoid - To fit

Fit the anti 'run-on' solenoid by reversing the procedure given for removal.

Anti 'run-on' solenoid circuit wiring - To check

1. Connect a test lamp across the two electrical connections to the solenoid. **Do not disconnect the two connections.**

Printed in England
© Rolls-Royce Motors Limited 1980

July 1980
TSD 4200
(Japan
1979 Model year)

2. Switch on the ignition and check that the test lamp bulb illuminates.
3. Switch off the ignition and check that the test lamp bulb is extinguished.

Anti 'run-on' solenoid - To check
1. Ensure that the usual safety precautions are carried out (i.e. parking brake firmly applied, gear range selector lever in 'Park', etc.).
2. Connect an impulse tachometer in accordance with the manufacturer's instructions.
3. Detach the weakening device pressure tapping cap (see Fig. U18) and connect a manometer capable of reading 0 to 15,24 cm. (0 to 6 in.) of water to the tapping.
4. Disconnect the carburetter vacuum signal to the E.G.R. valves at the cut-off solenoid end of the hose. Blank off the signal hose.

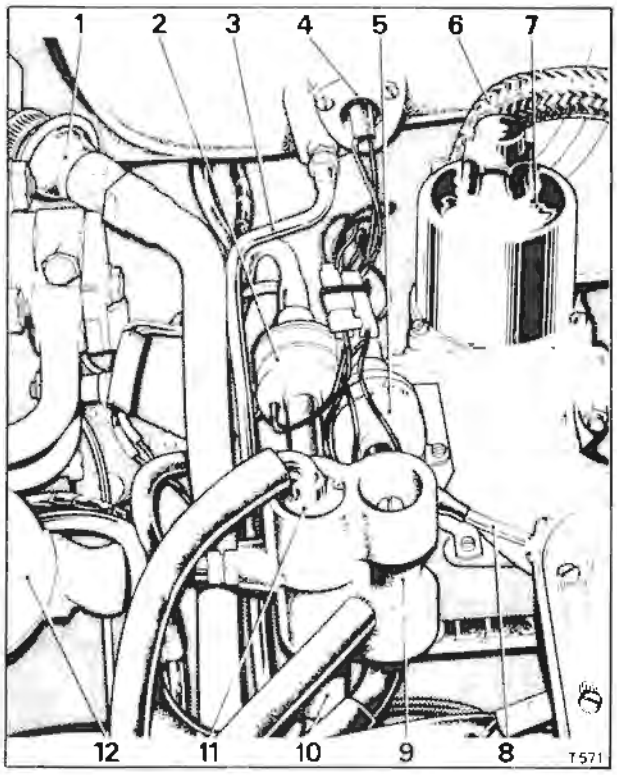

Fig. U37 Solenoid platform
1 Check valve
2 Anti 'run-on' solenoid
3 Choke stove pipe
4 E.G.R. system and Weakening system cut-out switch
5 E.G.R. system and Weakening system cut-off solenoid
6 Exhaust gas distribution pipe
7 'B' bank carburetter
8 E.G.R. signal hose
9 Mixture weakening device
10 Fuel receiver
11 Float chamber vent valve
12 Engine oil filler cap

5. Start and run the engine at the idle speed setting (650 r.p.m.).
6. Switch off the engine and observe the reading on the manometer. The reading should momentarily increase to approximately 15,24 cm. (6.0 in.) as the engine stops.
7. If the reading does not increase, the operation of the anti 'run-on' solenoid is incorrect.

This could be caused by the following.
a. A blockage in the hose (see Fig. U18) from the anti 'run-on' solenoid to the weakening device.
b. A blockage in the hose (see Fig. U18) from the anti 'run-on' solenoid to the vacuum manifold or in the vacuum manifold.
c. Incorrect wiring to the anti 'run-on' solenoid.
d. Faulty anti 'run-on' solenoid.

E.G.R. system and Weakening system cut-off solenoid

The E.G.R. system and weakening system cut-off solenoid is the rearmost of the two solenoids mounted on the platform adjacent to 'B' bank carburetter (see Figs. U4 and U37).

E.G.R. system and Weakening system cut-off solenoid - To remove
1. Detach the electrical connections, noting the position of the connections to assist identification when assembling.
2. Detach the rubber hose from either side of the solenoid.
3. Unscrew the two 'cheese-headed' mounting screws and withdraw the solenoid.

E.G.R. system and Weakening system cut-off solenoid - To fit
Fit the cut-off solenoid by reversing the procedure given for removal.

E.G.R. system and Weakening system cut-off solenoid circuit wiring - To check
1. Connect a test lamp across the two electrical connections to the solenoid. **Do not disconnect the two connections.**
2. Ensure the engine is cold.
3. Switch on the ignition and start the engine noting that the bulb of the test lamp is illuminated.
4. Run the engine; noting that as the engine warms-up [the inlet air temperature reaches approximately 14° C. (57° F.)] the test lamp bulb should extinguish.
5. Stop the engine and allow to cool, noting that when the engine becomes cold [the air in the intake drops to a temperature of approximately 12° C. (54° F.)] the test lamp bulb again illuminates.

E.G.R. system and Weakening system cut-off solenoid - To check
1. Detach the carburetter vacuum signal to weakening system cut-off solenoid hose at the solenoid and blank off the hose.

Connect a suitable length of hose to the solenoid connection.
2. Clean the open end of the additional hose.
3. Switch on the ignition.
4. Place the hose in the mouth and apply pressure.
5. If the operation of the solenoid is correct note that the following conditions apply.
a. With a cold engine [i.e. the inlet air temperature below approximately 14° C. (57° F.)] blowing air through the hose **should not** be possible.
b. As the engine warms-up [i.e. an inlet air temperature of approximately 14° C. (57° F.) or above] blowing air through the hose should be possible.
c. As the engine again cools [i.e. the inlet air temperature drops below approximately 12° C. (54° F.)] the conditions described in (a) should again apply.

Kickdown and Full throttle E.G.R. cut-out micro-switch

This micro-switch is situated on the underside of the car body below the accelerator pedal, it is a dual purpose micro-switch providing kickdown (detent) for the torque converter transmission and cut-out for the E.G.R. system.

Kickdown and Full throttle E.G.R. cut-out micro-switch - To remove
1. Drive the car onto a ramp and raise to a suitable working height.
2. From inside the car, locate the micro-switch operating plunger beneath the accelerator pedal.
3. Unscrew the large retaining nut and withdraw the washer.
4. From under the car detach the electrical connections and withdraw the micro-switch assembly.

Kickdown and Full throttle E.G.R. cut-out micro-switch - To dismantle
The assembly comprises the micro-switch, plunger and casing, the assembly should be removed from the car before any dismantling is commenced.
1. Using a screwdriver carefully 'ease back' the indentations which crimp around the cover of the assembly.
2. Remove the cover.
3. Disconnect the two electrical cables from the micro-switch. The White/Green cable has a 'Lucar' connection and the White cable is retained by a small cheesehead screw.
4. Unscrew the two 6 B.A. nuts securing the micro-switch to its mounting bracket. Withdraw the cheesehead screws and collect the two washers from each screw. Withdraw the micro-switch.
5. Unscrew the two cheesehead screws retaining the micro-switch mounting bracket. Withdraw the bracket.
6. Remove the circlip from around the plunger assembly.
7. Withdraw the plunger assembly and spring.

Kickdown and Full throttle E.G.R. cut-out micro-switch - To assemble
Assemble the micro-switch and plunger by reversing the procedure given for dismantling, noting the following points.
1. Ensure that the rubber seal is in a good condition and fitted securely to the body of the assembly. The seal is secured using Dunlop Adhesive S1240 or equivalent.

Kickdown and Full throttle E.G.R. cut-out micro switch - To set
1. Ensure that the carburetter linkage (refer to Section U5) and the accelerator pedal linkage (refer to Section K7) are correctly set. Swing the micro-switch towards the base of the plunger until a 0,254 mm. to 0,762 mm. (0.010 in. to 0.030 in.) gap exists between the micro-switch button and the plunger.
2. Tighten the micro-switch securing nuts and afterwards, check that the gap set in Operation 1 has not been disturbed.
3. Slowly depress the plunger to obtain full stroke. Check that the switch operates (audible click) during this operation.
4. Ensure that with the main plunger fully depressed it is still clear of the micro-switch case (see Fig. U38).

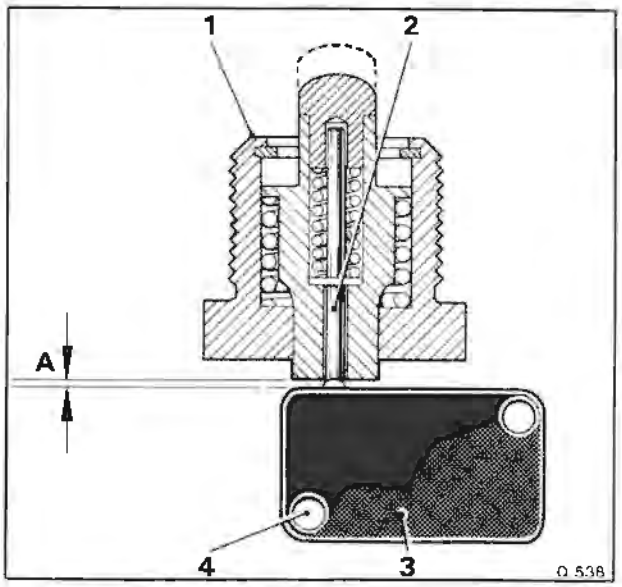

Fig. U38 Kickdown and Full throttle E.G.R. cut-out micro-switch
1 Kickdown and Full throttle E.G.R. cut-out micro-switch
2 Secondary plunger
3 Micro-switch
4 Elongated hole in mounting plate (micro-switch adjustment)
A Clearance of 0,127 mm. (0.005 in.)

Printed in England
© Rolls-Royce Motors Limited 1979

5. Slowly release the plunger ensuring that the micro-switch contacts open (audible click).
6. Ensure that the clearance set between the plunger and the micro-switch button, remains as set in Operation 1.

Kickdown and Full throttle E.G.R. cut-out micro-switch - To check

To check the circuit wiring and micro-switch operation for full throttle E.G.R. cut-off proceed as follows.

1. Carry out Operations 1 to 4 inclusive under the heading 'E.G.R. system and Weakening system solenoid circuit wiring - To check'.
2. Stop the engine and depress the accelerator to activate the micro-switch.
3. Ensure that the test lamp bulb is illuminated whilst the full throttle position is maintained with the accelerator pedal.

Catalytic converter overheat warning system

To satisfy Japanese regulations a warning system is fitted to the exhaust catalytic converters to alert the driver if temperatures in these two areas become excessive.

The sensors are shown in Figure U39.

The warning system utilises a catalyst control unit (mounted under the front left-hand wing above the under wing sheet) and warning lamp situated on the facia.

If the temperature of either of the catalytic converters becomes excessive the warning lamp will illuminate.

Overheat warning lamp

To check that the warning lamp bulb is operating satisfactorily, ensure that the red coloured warning lamp situated between the four-in-one instrument gauge and speedometer, directly below the main beam warning lamp, illuminates just prior to the engine starting but is extinguished immediately the engine starts.

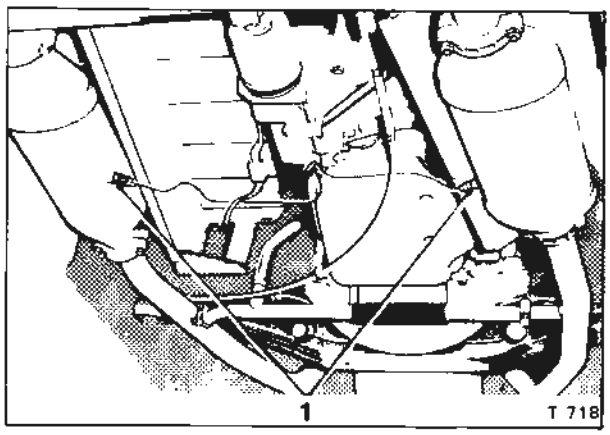

Fig. U39 Exhaust overheat sensors
1 Catalytic converters

Overheat warning

Should an exhaust overheat condition be signalled the speed of the vehicle must be reduced to 50 k.p.h. (30 m.p.h.) immediately and this speed must not be exceeded until the cause of the overheat warning has been investigated and corrected.

Before carrying out a full diagnostic inspection ensure that the vehicle did not run out of fuel.

If the overheat warning lamp illuminates for reasons other than the above, a fault has occurred in:

a. The various systems that lead into the exhaust (i.e. fuel system, air injection system, etc.) or in the exhaust itself particularly the catalytic converter. Any faults in these areas can be determined as **system faults.**

b. The overheat warning circuit (i.e. faulty converter thermocouple (sensor), wiring connections, etc.) causing the lamp to illuminate although the system is operating satisfactorily. These faults can be determined as **circuits faults.**

Further conditions may apply when investigating possible faults with the overheat warning system, as follows:

a. The car has been returned with the warning lamp illuminated.

b. The car has been returned for investigation when the warning lamp has been illuminated but is **not illuminated at the time of** the investigation.

Warning lamp illuminated

1. Ensure that the normal safety precautions (i.e. parking brake is firmly applied, etc.) are carried out and the ignition is switched on.
2. Carefully observe if the vehicle appears exceptionally hot particularly in the area of the catalytic converters. If hotter than is usual for a car fitted with catalysts suspect a **system fault.**
3. Raise the car bonnet, locate the Lucar connections for the catalytic converter thermocouples (sensors) and disconnect each brown cable in turn. The connections are situated adjacent to the front left-hand road spring pot cover and the valance. The brown and blue cables, together with the control box loom enter the engine compartment from under the front wing (see Fig. U41).

4a. If the warning lamp extinguishes a **system fault** can be suspected proceed to Operation 5.

b. If the warning lamp continues to be illuminated a **circuit fault** can be suspected, proceed to Operation 5.

After Operation 4 connect the brown cables to their respective connections.

5. Position the car on a ramp and carry out Operation 1.
6. From beneath the car, carefully observe the area around the catalytic converter assemblies. The catalytic converters and surrounding area will normally be very hot, however, excessive temperature caused by a **system fault** will result in the overheat warning lamp illuminating.
7. Switch off the ignition and allow the car to

cool down. When the car is cold switch on the ignition and check the warning lamp as follows.
a. If the warning lamp is still illuminated suspect a **warning circuit** fault and check out the circuits as detailed in the service checks.
b. If the warning lamp is not illuminated suspect a fault in one of the systems feeding into the exhaust (**system fault**).

From the evidence gained by carrying out Operations 1 to 7 inclusive it can be determined if the vehicle has a **system fault** or a **warning circuit fault** and the information listed in the appropriate section should be consulted.

Warning lamp not illuminated at the time of investigation
1. Ensure that the normal safety precautions (i.e. parking brake is firmly applied, etc.) are carried out and the ignition is switched on.
2. Raise the car bonnet and carry out service checks on the **catalytic converter thermocouple** and **control box.**
3. If all the service checks on the warning circuits prove satisfactory a **system fault** should be suspected.

From the evidence gained by carrying out Operations 1 to 3 inclusive it can be determined if the vehicle has a **system fault** or a **warning circuit fault** and the information listed in the appropriate section should be consulted.

System faults
The following is a list of components and systems that may contribute to a malfunction in the exhaust resulting in overheating of the catalytic converter
Note
Any condition resulting in an engine misfire or uneven running should always be investigated first as this condition could result in the catalytic converters overheating.
1. Faulty air injection system.
2. Faulty air pressure relief valve.
3. Ignition system faulty (including ignition timing).
4. Fouled sparking plugs.
5. Incorrect float chamber depression.
6. Incorrect purge flow rate.
7. Blocked fuel feed line.
8. Fouled float chamber filters.
9. Choke system operation incorrect (including choke hold solenoid).
10. Sticking carburetter piston.
11. Fouled carburetter float chamber or jet.
12. Exhaust gas recirculation valves failed.
13. Air leak into induction system.
14. Failed exhaust gas recirculation cut-off solenoid, cut-out switch or electrical supply circuit.
15. Failed anti 'run-on' solenoid or electrical supply circuit.
16. Faulty hot idle mixture compensator.
17. Weakening device filter blocked or blockage in rubber connecting hoses.
18. Flooding of carburetter float chamber or jet.
19. Incorrect operation of temperature controlled air intake system.

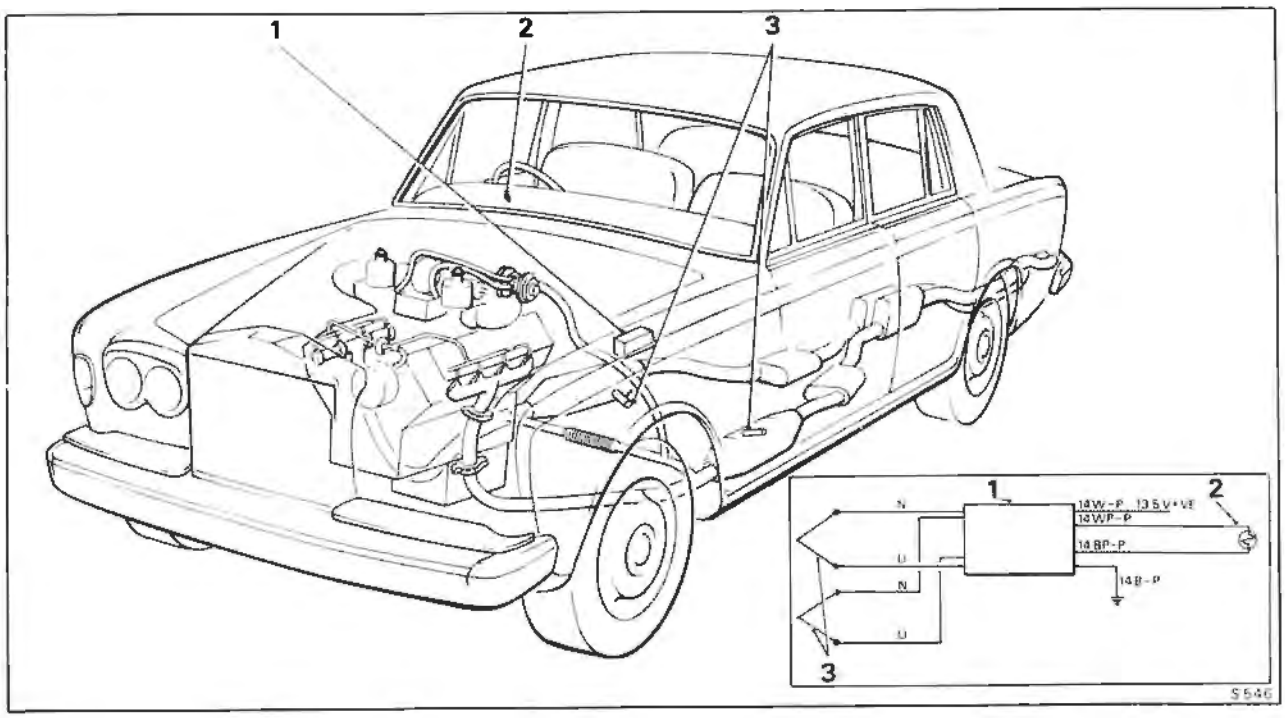

Fig. U40 Overheat warning system
1 Control unit 2 Warning lamp 3 Catalyst thermocouple probe

Printed in England
© Rolls-Royce Motors Limited 1979

Note
Should the overheat warning lamp illuminate while testing is in progress, disconnect and blank off the air injection system check valves. This action should prevent overheating of the catalyst whilst the remaining tests are completed.

Warning circuit faults
The following is a list of components within the overheat warning system that may contribute to a malfunction of the warning system.

A theoretical wiring diagram of the warning circuits is illustrated in Figure U40.

1. Catalyst overheat warning control box and wiring.
2. Warning lamp.
3. Catalyst thermocouple probes and wiring.

Service checks

Catalyst overheat warning control box and lamp - To check

1. Raise the car bonnet, locate the control box loom and the catalyst thermocouple cables on the left-hand valance adjacent to the front road spring pot cover (see Fig. U41).
2. Identify the two sets of catalyst thermocouple cables, each set has one brown and one blue cable.
3. In turn, disconnect each blue cable at its Lucar connection and connect the end from the control box through a 9 k resistor to Positive (this can be the white wire in the control box loom).
4. Switch on the ignition, if the control and wiring is correct the warning lamp will illuminate.
5. Remake the electrical connections.

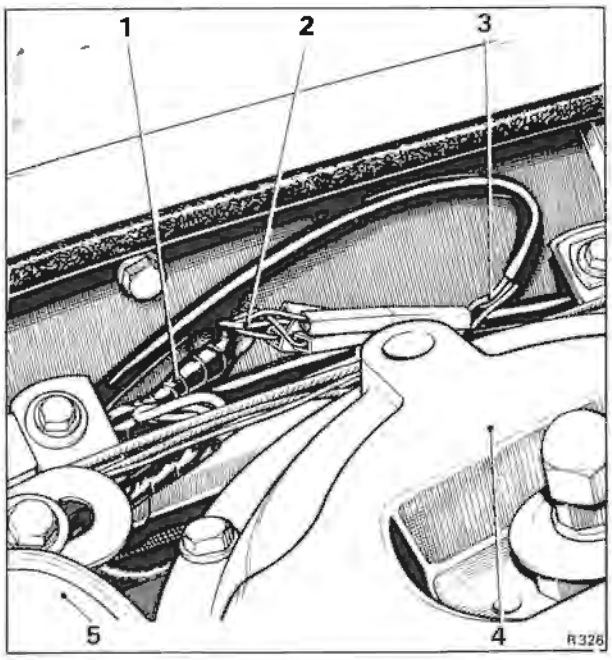

Fig. U41 Catalytic converter thermocouple probe cables and control box loom
1 Control box loom
2 Catalyst thermocouple cables (blue)
3 Catalyst thermocouple cables (brown)
4 Left-hand front road spring cover
5 Hydraulic systems reservoirs

Catalyst thermocouple probe - To check

1. Raise the car bonnet, locate the control box loom and the catalyst thermocouple cables on the left-hand valance adjacent to the front road spring pot cover (see Fig. U41).
2. Identify the two sets of catalyst thermocouple cables, each set has one brown and one blue cable.
3. In turn, disconnect each set of cables at their Lucar connections and using suitable equipment (e.g. an Avometer) ensure that the thermocouple probe is not open circuit.
4. Providing the thermocouple probes are not open circuit they are considered serviceable, however, should it be suspect for other reasons a new unit must be fitted.
5. Remake the electrical connections.

Catalyst thermocouple probe - To remove and fit

1. Unclip the thermocouple lead from the side of the catalyst.
2. Unscrew the $^{7}/_{16}$ in. A/F cap nut and withdraw the thermocouple probe from the catalyst.
3. Disconnect the 'Lucar' connections adjacent to the transmission.
4. Release the lock-nuts and free the thermocouple from its mounting at the rear end of the transmission.
5. Fit the thermocouple probe in the reverse order.

Catalyst overheat warning control box - To remove

1. Ensure that the normal safety precautions (i.e. parking brake is firmly applied,etc.) are carried out. Firmly chock the wheels.
2. Raise the front of the car on a jack and position stands beneath the car.
3. Remove the front left-hand road wheel.
4. Remove the underwing sheet.
5. Raise the car bonnet, locate the control box loom and catalyst thermocouple cables on the left-hand valance adjacent to the front road spring pot cover (see Fig. U41).
6. Disconnect the cables mentioned at their Lucar connectors and carefully feed them through the valance.
7. Remove the mounting setscrews and withdraw the control box from beneath the wing.

Catalyst overheat warning control box - To fit

1. Fit the control box by reversing the procedure given for removal, ensuring that the rubber grommet is correctly fitted to the hole in the wing valance and the cables are correctly connected in the engine compartment.

Overheat warning lamp - To remove and fit

The warning lamp is situated between the four-in-one instrument and the speedometer, directly below the main beam warning lamp on the facia.

1. To gain access to the lamp it will be necessary to remove the facia (see Chapter S).

Printed in England

© Rolls-Royce Motors Limited 1979

January 1979

TSD 4200
(Japan
1979 Model year)

Section U8

Fault diagnosis

Printed in England

© Rolls-Royce Motors Limited 1979

Symptoms	Possible Cause
1. Engine will not start. (Starter motor operating).	**1.** (a) Ignition circuit broken. (b) Failed anti 'run-on' solenoid or failure of electrical supply circuit. (c) Ignition system faulty. (d) Damaged or contaminated ignition high tension circuit. (e) Blocked fuel feed line, fouled float chamber filters or fouled fuel recirculation restrictor. (f) Faulty choke bi-metal coil. (g) Choke solenoid inoperative. (h) Faulty choke fast-idle mechanism. (i) Air leak into induction system. (j) Faulty hot idle mixture compensator. (k) Weakening device filter blocked, weakening device air intake non-return valve failed or blockage in rubber connecting hoses. (l) Faulty weakening device cut-off solenoid or failure of electrical supply circuit. (m) Faulty weakening device control switch or failure of electrical supply circuit. (n) Dislodged venturi in weakening device. (o) Flooding of carburetter float chamber or jet. (p) Exhaust gas recirculation valve(s) failed.
2. Engine idles very roughly.	**2.** (a) Ignition system faulty. (b) Fouled sparking plugs. (c) Damaged or contaminated ignition high tension circuit. (d) Fouled fuel recirculation restrictor. (e) Air leak into induction system. (f) Faulty hot idle compensator. (g) Weakening device filter blocked, weakening device air intake non-return valve failed or blockage in rubber connecting hoses.. (h) Badly worn or damaged carburetter control linkage. (i) Flooding of carburetter float chamber or jet. (j) Sticking carburetter piston. (k) Incorrect operation of carburetter jet compensation. (l) Fouled carburetter float chamber or jet. (m) Exhaust gas recirculation valve(s) failed. (n) Incorrect operation of temperature controlled air intake system.
3. Engine stalls.	**3.** (a) Ignition circuit broken. (b) Failed anti 'run-on' solenoid or failure of electrical supply circuit. (c) Ignition system faulty. (d) Damaged or contaminated ignition high tension circuit.

Symptoms	Possible Cause
3. Engine stalls (continued).	(e) Blocked fuel feed line, fouled float chamber filters or fouled fuel recirculation restrictor. (f) Air leak into induction system. (g) Faulty hot idle mixture compensator. (h) Weakening device filter blocked, weakening device air intake non-return valve failed or blockage in rubber connecting hoses. (i) Badly worn or damaged carburetter control linkage. (j) Flooding of carburetter float chamber or jet. (k) Sticking carburetter piston. (l) Incorrect operation of carburetter jet compensation. (m) Fouled carburetter float chamber or jet. (n) Exhaust gas recirculation valve(s) failed.
4. (i) Engine shows signs of power loss evident at high speeds and loading. (ii) Engine misfires particularly on hard acceleration from low speed.	4. (a) Ignition system faulty. (b) Fouled sparking plugs. (c) Damaged or contaminated ignition high tension circuit. (d) Blocked fuel feed line or fouled float chamber filters. (e) Choke system operation incorrect. (f) Sticking carburetter piston. (g) Fouled carburetter float chamber or jet. (h) Faulty exhaust gas recirculation full throttle cut-out switch or failure of electrical supply circuit. (i) Exhaust gas recirculation valve(s) failed. (j) Failed exhaust gas recirculation valve(s) cut-out solenoid or electrical supply circuit.
5. Engine hesitates or misfires under light load.	5. (a) Failed anti 'run-on' solenoid or failure of electrical supply circuit. (b) Ignition system faulty. (c) Fouled sparking plugs. (d) Damaged or contaminated ignition high tension circuit. (e) Blocked fuel feed line or fouled float chamber filters. (f) Air leak into induction system. (g) Faulty hot idle mixture compensator. (h) Weakening device filter blocked, weakening device air intake non-return valve failed or blockage in rubber connecting hoses. (i) Dislodged venturi in weakening device. (j) Flooding of carburetter float chamber or jet. (k) Incorrect operation of carburetter jet compensation. (l) Fouled carburetter float chamber or jet. (m) Exhaust gas recirculation valve(s) failed. (n) Incorrect operation of temperature controlled air intake system.
6. Increase in fuel consumption.	6. (a) Ignition system faulty. (b) Fouled fuel recirculation restrictor. (c) Faulty choke bi-metal coil. (d) Choke system operation incorrect. (e) Air leak into induction system. (f) Faulty hot idle mixture compensator.

Symptoms	Possible Cause
6. Increase in fuel consumption (continued).	(g) Weakening device filter blocked, weakening device air intake non-return valve failed or blockage in rubber connecting hoses. (h) Faulty weakening device cut-off solenoid or failure of electrical supply circuit. (i) Faulty weakening device control switch or failure of electrical supply circuit. (j) Air leak in mixture weakening system. (k) Flooding of carburetter float chamber or jet. (l) Sticking carburetter piston. (m) Incorrect operation of carburetter jet compensation. (n) Incorrect purge flow rate. (o) Exhaust gas recirculation valve(s) failed.
7. Decrease in fuel consumption.	**7.** (a) Air leak in mixture weakening system. (b) Incorrect operation of carburetter jet compensation. (c) Incorrect purge flow rate. (d) Faulty exhaust gas recirculation temperature control switch or failure of electrical supply circuit. (e) Exhaust gas recirculation valve(s) failed.
8. Engine 'backfires' on overrun.	**8.** (a) Ignition system faulty. (b) Air leak into induction system. (c) Faulty hot idle mixture compensator. (d) Exhaust gas recirculation valve(s) failed.
9. Sudden increase in engine idle speed.	**9.** (a) Faulty choke fast-idle mechanism. (b) Failed carburetter overrun valve.
10. Excessive noise from air injection pump or system.	**10.** (a) Faulty or damaged air injection pump, relief or check valves, connecting hoses or pipes.

Printed in England
© Rolls-Royce Motors Limited 1979

Section U9

Workshop tools

Tool Number	Description
RH 8090	Pliers - wire hose clips
RH 8725	Flowmeter (rotameter type)
RH 8841	Dial gauge - carburetter piston lift
RH 8880	Setting jig - throttle levers
RH 8945	Connector - choke stove pipe
RH 9086	Fitting tool - carburetter piston ball race clip
RH 9096	Fitting tool - 'A' bank mixture adjusting screw tamperproof seal
RH 9097	Fitting tool - 'B' bank mixture adjusting screw tamperproof seal
RH 9105	Kit - to adapt RH 8841 to fit S.U. HIF 7 carburetters

Printed in England
© Rolls-Royce Motors Limited 1979

Section U10

Running changes

Printed in England

© Rolls-Royce Motors Limited 1979

January 1979

TSD 4200
(Japan
1979 Model year)

Chapter U

Emission control systems

Applicable to 1980 model year cars destined for Japan

Section

U1 Introduction
U2 Exhaust emission control system
U3 Fuel evaporative emission control system
U4 Crankcase emission control system
U5 Carburetters and Automatic choke system
U6 Ignition system
U7 Electrical components
U8 Fault diagnosis
U9 Workshop tools
U10 Running changes

Printed in England

© Rolls-Royce Motors Limited 1980

April 1980

TSD 4200
(Japan
1980 Model year)

Chapter U - 1980 Japan

Issue record sheet 1

July 1980

The dates quoted below refer to the issue date of individual pages within this chapter.

Section	U1	U2	U3	U4	U5	U6	U7	U8	U9	U10
Page No.										
1	Apr 80	Apr 80	Apr 80	Apr 80	Apr 80	Apr 80	Jul 80	Apr 80	Apr 80	Apr 80
2	Apr 80	Apr 80	Apr 80		Apr 80	Apr 80	Jul 80	Apr 80		
3	Apr 80	Apr 80	Apr 80		Apr 80		Apr 80	Apr 80		
4	Apr 80	Apr 80	Apr 80		Apr 80		Apr 80			
5		Apr 80	Apr 80		Apr 80		Apr 80			
6		Apr 80	Apr 80		Apr 80		Apr 80			
7		Apr 80	Apr 80		Apr 80		Apr 80			
8		Apr 80	Apr 80		Apr 80					
9					Apr 80					
10					Apr 80					
11					Apr 80					
12					Apr 80					
13					Apr 80					
14										
15										
16										
17										
18										
19										
20										
21										
22										
23										
24										
25										
26										
27										
28										
29										
30										
31										
32										
33										
34										
35										
36										
37										
38										
39										
40										
41										
42										
43										
44										
45										
46										
47										
48										

Printed in England

© Rolls-Royce Motors Limited 1980

Section U1

Introduction

This Chapter has been written specifically for cars fitted with Emission Control Systems conforming to the Japanese emission control regulations, applicable to 1980 model year new motor vehicles.

It is important therefore that Service Personnel fully understand the contents of this Chapter so that the special servicing can be correctly carried out.

Rolls-Royce and Bentley motor cars conforming to the above regulations and produced to the 1980 model year specification can be readily identified as follows.

1. A 1980 date of manufacture plate located on the bulkhead.

Engine compartment

Figures U2 and U3 overleaf show the location of the major emission control system components within the engine compartment.

Hose routing diagram

Figure U4 within the Introduction section gives details of the various hose 'runs' and connections in and around the engine compartment, that are associated with the emission control systems components.

Torque tightening

When fitting the various emission control systems components, ensure that the securing nuts and set-screws are tightened to the torque figures given in Chapter P, unless otherwise stated in this Chapter.

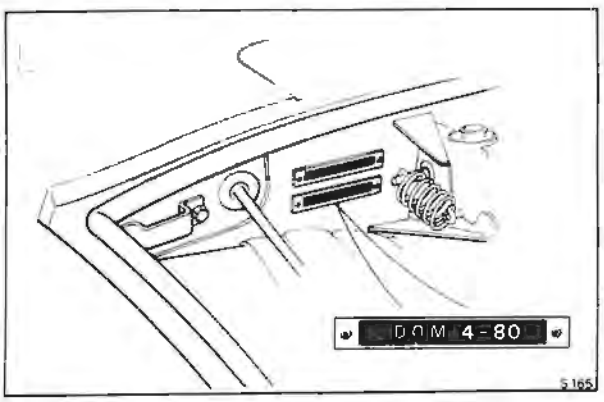

Fig. U1 Date of manufacture plate

Printed in England
© Rolls-Royce Motors Limited 1980

April 1980
TSD 4200
(Japan
1980 Model year)



Fig. U2 Engine compartment details (L.H. side)

1 Air pump
2 Connection block and relief valve
3 Check valves
4 'A' bank air manifold
5 Weakening and E.G.R. systems cut-out switch

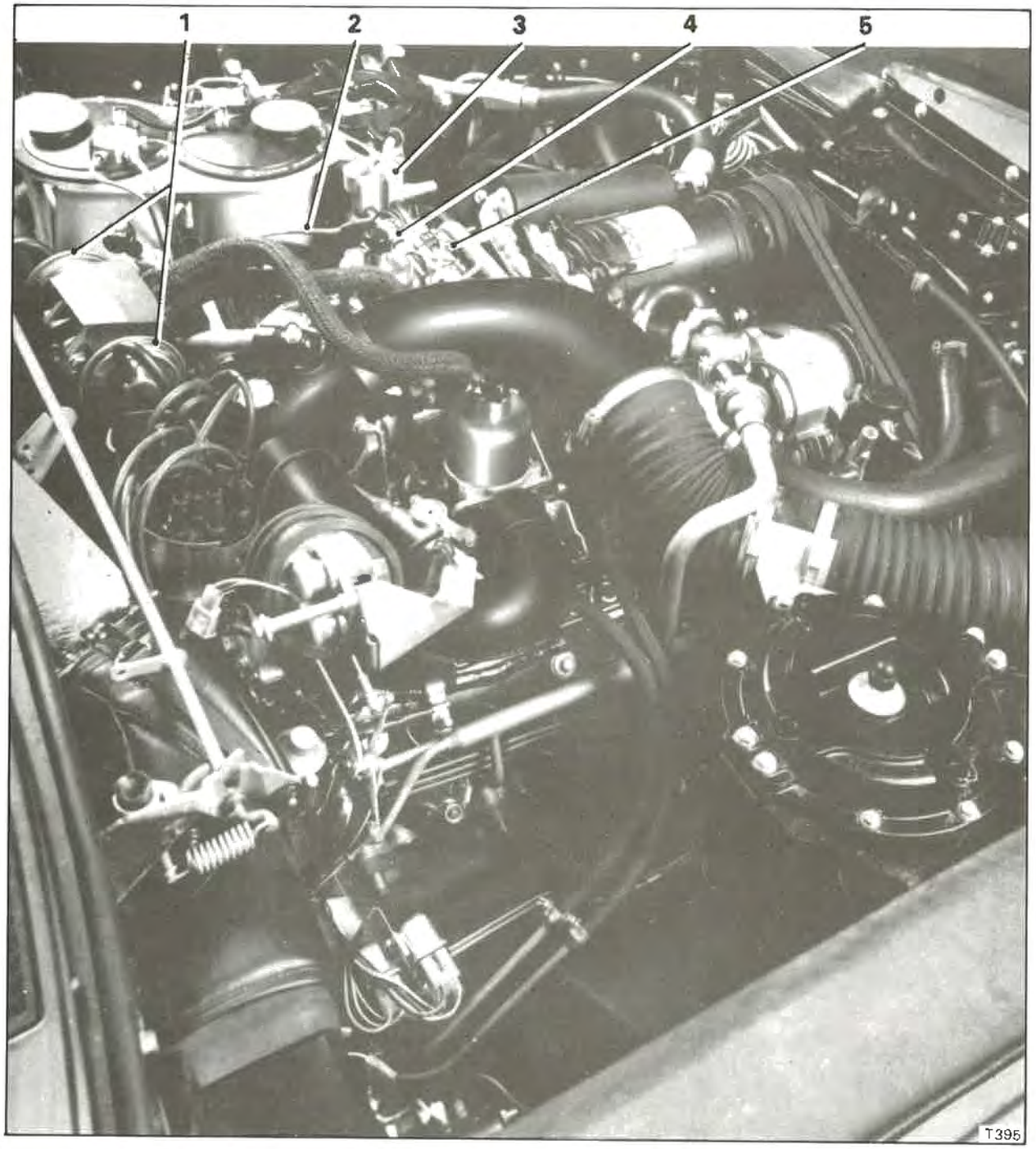

Fig. U3 Engine compartment details (R.H. side)

1 Exhaust gas recirculation valves
2 E.G.R. signal hose
3 Weakening device assembly
4 Weakening and E.G.R. systems cut-off solenoid
5 Anti 'run-on' solenoid

Printed in England
© Rolls-Royce Motors Limited 1980

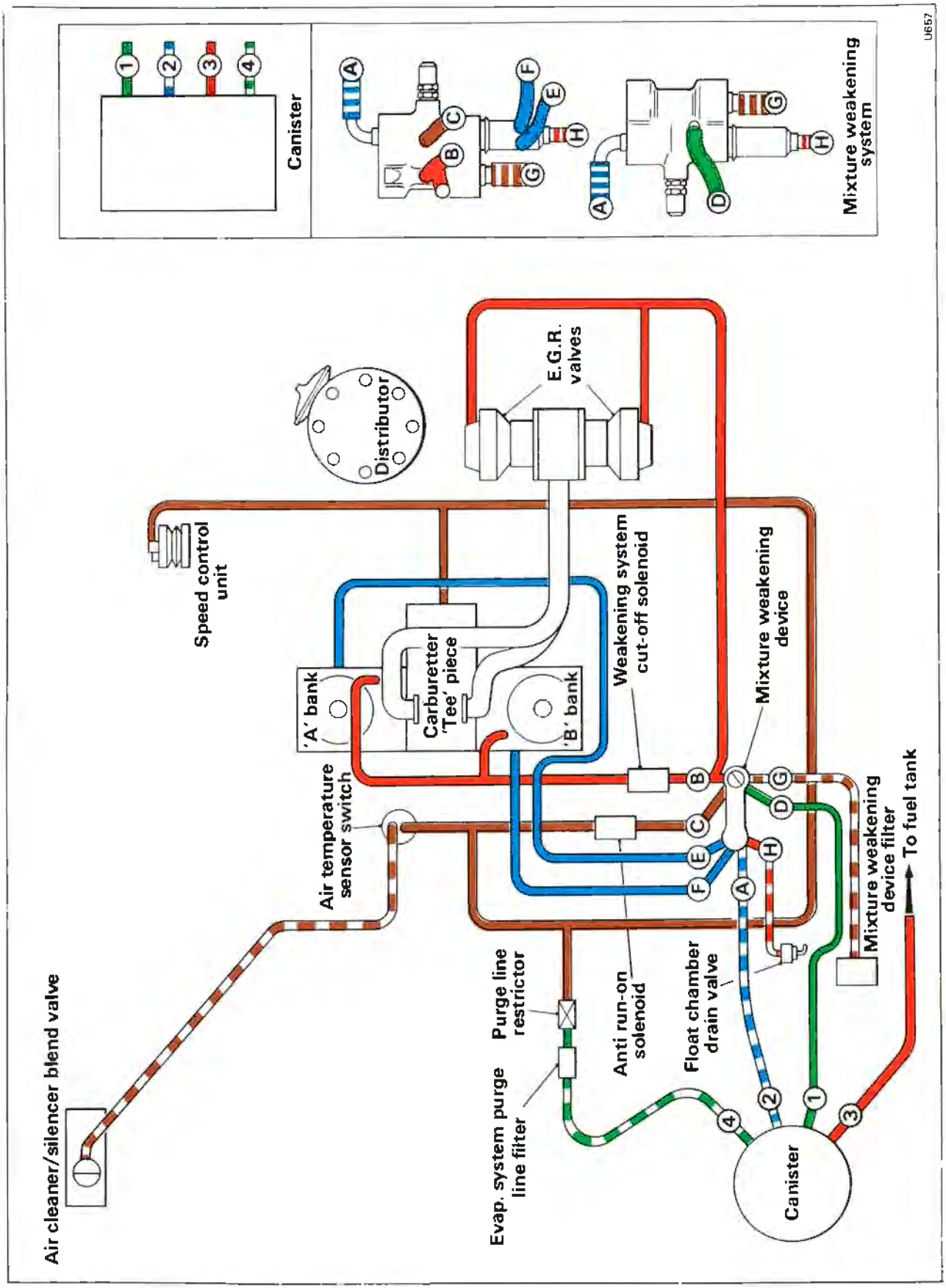

Fig. U4 Hose routing diagram - 1980 model year cars

Printed in England
© Rolls-Royce Motors Limited 1980

Section U2

Exhaust emission control system

The Exhaust Emission Control System is designed to reduce the carbon monoxide, hydrocarbon and oxides of nitrogen content in the exhaust gases.

The system does not eliminate the danger caused by inhaling exhaust gases in a confined area.

Air from the atmosphere is drawn into the engine driven air injection pump through a centrifugal filter. From the pump, a quantity of air proportional to engine speed passes via a three-way connection block (containing a relief valve), through check valves to the air manifolds and then into the exhaust ports. This air combines with the exhaust gases discharged from the combustion chambers and promotes the oxidation process in the exhaust system and catalytic converters. The gases then pass through the exhaust system to atmosphere.

In addition, a proportion of the exhaust gas from the exhaust balance pipe situated between the two downtake pipes, is recirculated through vacuum operated metering valves into the carburetter 'tee' piece, just downstream of the throttle plates. The recirculated exhaust gas mixes with the inlet charge of fuel/air mixture in the induction manifold and is distributed to the cylinders, lowering the peak combustion temperature and reducing oxides of nitrogen emissions.

Before commencing work on the exhaust emission control system, care should be taken to ensure that the relevant components are not hot.

The system is illustrated in Figure U5 and comprises the following main components.

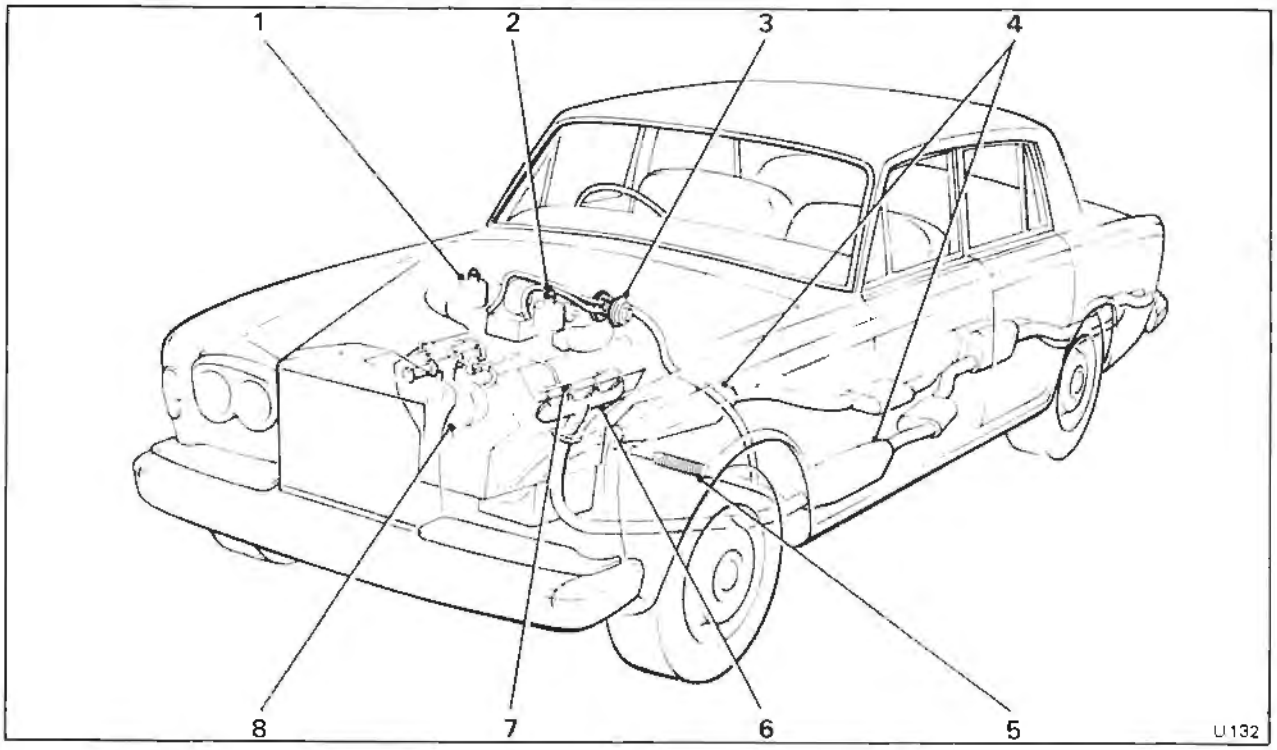

Fig. U5 Exhaust emission control system

1 'A' bank carburetter
2 'B' bank carburetter
3 Exhaust gas recirculation valves
4 Catalytic converters
5 Exhaust system balance pipe
6 'B' bank exhaust manifold
7 'B' bank air manifold
8 Air pump

April 1980
TSD 4200
(Japan
1980 Model year)

Air injection system (see Fig. U6)
Air manifolds
Air pump
Check valves
Centrifugal air filter
Pressure relief valve
Three-way connection block

Exhaust gas recirculation system (E.G.R.) (see Fig. U9)
Cut-off solenoid (see Section U7)
Cut-out switch (see Section U7)
Distribution pipes
E.G.R. valves
E.G.R. valves heatshield
Feed pipe
Full throttle cut-out micro-switch (see Section U7)

Exhaust system (see Figs. U5 and U12)
Catalytic converters (For details of the Exhaust system refer to Chapter Q).

For details of the servicing and maintenance requirements of the Exhaust Emission Control System, refer to the Service Schedules Manual - T.S.D. 4117.

Air injection system (see Figs. U5 and U6)
A detailed description of the air injection system is given at the beginning of this section.

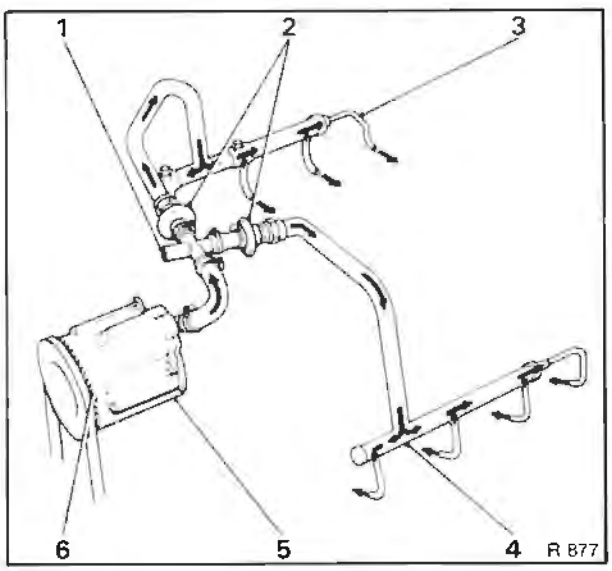

Fig. U6 Air injection system
1 Relief valve
2 Check valves
3 'A' bank air manifold
4 'B' bank air manifold
5 Air pump
6 Air pump intake

Air injection system - To test
1. Connect an electric impulse tachometer to the engine in accordance with the manufacturer's instructions.
2. Start and run the engine at a constant speed of 2 000 r.p.m., check that air does not escape from the relief valve.
3. If air does escape during Operation 2, check that the correct (blue) setting plug is fitted to the pressure relief valve.
4. If the system does not operate as described in Operation 2, stop the engine and fit a new three-way connection block assembly (containing the pressure relief valve).
5. Repeat Operation 2.
6. Stop the engine and remove the test equipment.

Air injection system - Leak check
Check the air injection system for air leaks by carrying out the following sequence of operations.
1. Ensure that the ignition is switched off.
2. Visually inspect the condition of all hoses, pipes and joints associated with the air injection system.
3. Ensure that all worm drive clips are tight.
4. Start the engine and listen carefully for any evidence of an air leak from the system.
5. If an air leak is suspected it is permissible to coat the component or hose with a soap solution, soap bubbles will confirm an air leak.

Air injection system - Fault diagnosis
To diagnose malfunctioning of the air injection system refer to Section U8 - Fault diagnosis.

Air manifolds
The air manifolds convey air from the check valves to the engine exhaust ports. One air manifold is fitted to each bank of cylinders and is identified as 'A' bank air manifold or 'B' bank air manifold.

To remove an air manifold, unscrew the check valve union and the four ¾ in. A/F adapters in the cylinder head.

The 'A' bank air manifold is reasonably straight forward to withdraw but 'B' bank air manifold will require the disconnecting of several other hoses and pipes (e.g. choke stove pipes, fuel evaporative weakening device hoses and pipes, etc.), to facilitate withdrawal.

Fit the air manifolds by reversing the procedure given for removal, noting that the check valve union has a tapered thread. All the adapters in the cylinder head should be torque tightened to the figures given in Chapter P.

Air pump
The air pump is of the rotary vane type and is belt driven from the engine coolant pump. The centrifugal air filter is an integral part of the pump

and is situated between the pump body and the pump driving pulley.

Air pump - To remove (see Fig. U7)

1. Disconnect the battery (refer to Chapter M).
2. Unscrew the worm drive clip and detach the hose from the pump to the three-way connection block, at the pump. Blank off the hose and pump connections to prevent the ingress of dirt, etc.
3. Slacken the two 7/16 in. A/F setscrews on the drive belt adjustment strut; remove the upper bolt.
4. Remove the drive belt from the pulley.
5. Support the air injection pump and unscrew and remove the 7/16 in. A/F mounting setscrew situated on the opposite side of the pump pulley.

Air pump - To fit

Fit the air pump by reversing the procedure for removal noting the following.

1. Ensure that the driving belt is adjusted so that an applied force of 5,5 kgf. (12 lbf.) mid-way between the air injection pump pulley and the coolant pump pulley causes the belt to deflect 9,5 mm. (0.375 in.).

Air pump pulley

1. To remove, unscrew and remove the three set-screws situated around the centre of the pulley. Withdraw the pulley.
2. To fit the pulley, reverse the procedure given for removal ensuring that the setscrews are torque tightened to the correct figure (see Chapter P).

Check valves

The check valves are non-return valves (one-way valves) and one is fitted into the air injection system between the air pump and the air manifolds, for each bank of cylinders.

The check valves prevent the backflow of exhaust gases into the air lines or air pump, they operate whenever the exhaust back pressure exceeds the air pump delivery pressure at high speed and/or in the case of air pump drive belt failure.

To remove a check valve, slacken the worm drive clip situated on the air pump to check valve hose. Unscrew the union from the air manifold and withdraw the check valve. Fit a check valve in the reverse order.

Pressure relief valve (see Figs. U6 and U8)

The spring loaded pressure relief valve is permanently housed within the three-way connection block, its function is to allow excess air to escape from the air injection system when the check valves are closed. The relief valve prevents damage to the pump vanes and excess exhaust temperatures under extreme operating conditions.

If it becomes necessary to remove the pressure relief valve three-way connection block, slacken the worm drive clips on the three connecting hoses and withdraw the assembly.

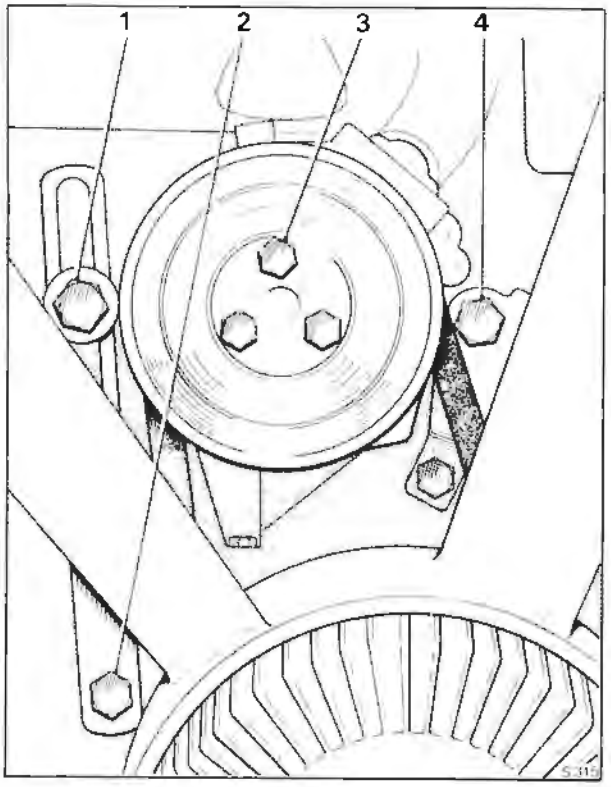

Fig. U7 Air injection pump

1 Adjustment strut upper setscrew
2 Adjustment strut pivot setscrew
3 Pulley retaining setscrews
4 Air pump mounting setscrew

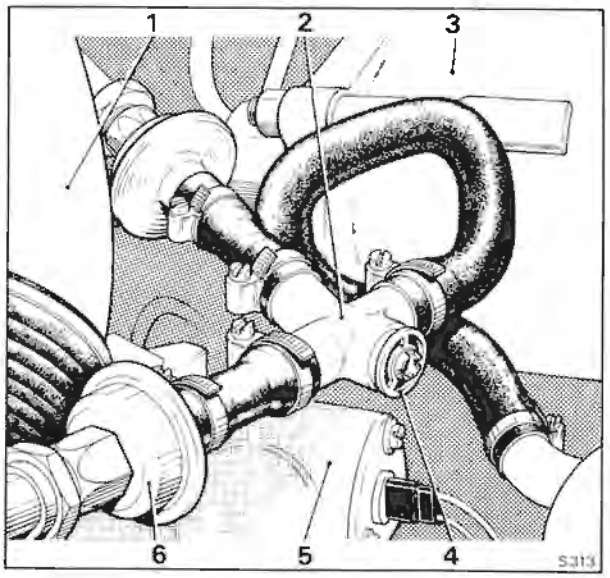

Fig. U8 Three-way connection block

1 Carburetter air intake
2 Three-way connection block
3 Refrigeration compressor
4 Air injection system pressure relief valve
5 Thermostat elbow
6 Check valve

Printed in England
© Rolls-Royce Motors Limited 1980

To test the pressure relief valve, blank off the two connections for the check valves and apply pressure to the connection from the pump; ensure that the relief valve operates within the following acceptable limits.
0,5 kgf/sq.cm. to 0,6 kgf/sq.cm.
(7.4 lbf/sq.in. to 8.4 lbf/sq.in.).

Exhaust gas recirculation system (E.G.R.) (see Figs. U5 and U9)

A detailed description of the exhaust gas recirculation system (E.G.R.) is given at the beginning of this section.

Distribution pipes

The distribution pipes convey the recirculated exhaust gas from the E.G.R. valves into the carburetter 'tee' piece.

Distribution pipes - To remove

1. Using a 7/16 in. A/F spanner unscrew and remove the two nuts and washers securing the distribution pipes to the E.G.R. valve mounting block.
2. Unscrew the 7/16 in. A/F setscrews retaining the heatshield to 'B' bank air horn; collect the washers.
3. Ease the mounting block rearward to free the joint face; discard the gasket.
4. Support the weight of the distribution pipes.
5. Unscrew and remove the four 2 B.A. setscrews and washers securing the two distribution pipe flanges to the carburetter 'tee' piece.
6. Withdraw the distribution pipes and discard the gaskets.

Distribution pipes - To fit

Fit the distribution pipes by reversing the procedure given for removal, noting the following points.
1. Ensure that all joint faces are clean and free from carbon deposits.
2. Coat the joint faces and gaskets at the carburetter 'tee' piece with 'Wellseal'.

Distribution pipes - To clean

1. Remove the distribution pipes as described in Distribution pipes - To remove.
2. With a pointed scraper clean as much carbon deposit as possible from inside the distribution pipes and the joint faces. Particular attention should be given to the carburetter end of the pipes, because the majority of the carbon deposit will be found in this area.
3. Using wire brushes complete the cleaning operation on the distribution pipes.
4. With a pointed scraper remove the carbon deposits from the carburetter 'tee' piece connection orifices.
5. Before fitting the distribution pipes thoroughly blow-out the pipes and carburetter 'tee' piece con-

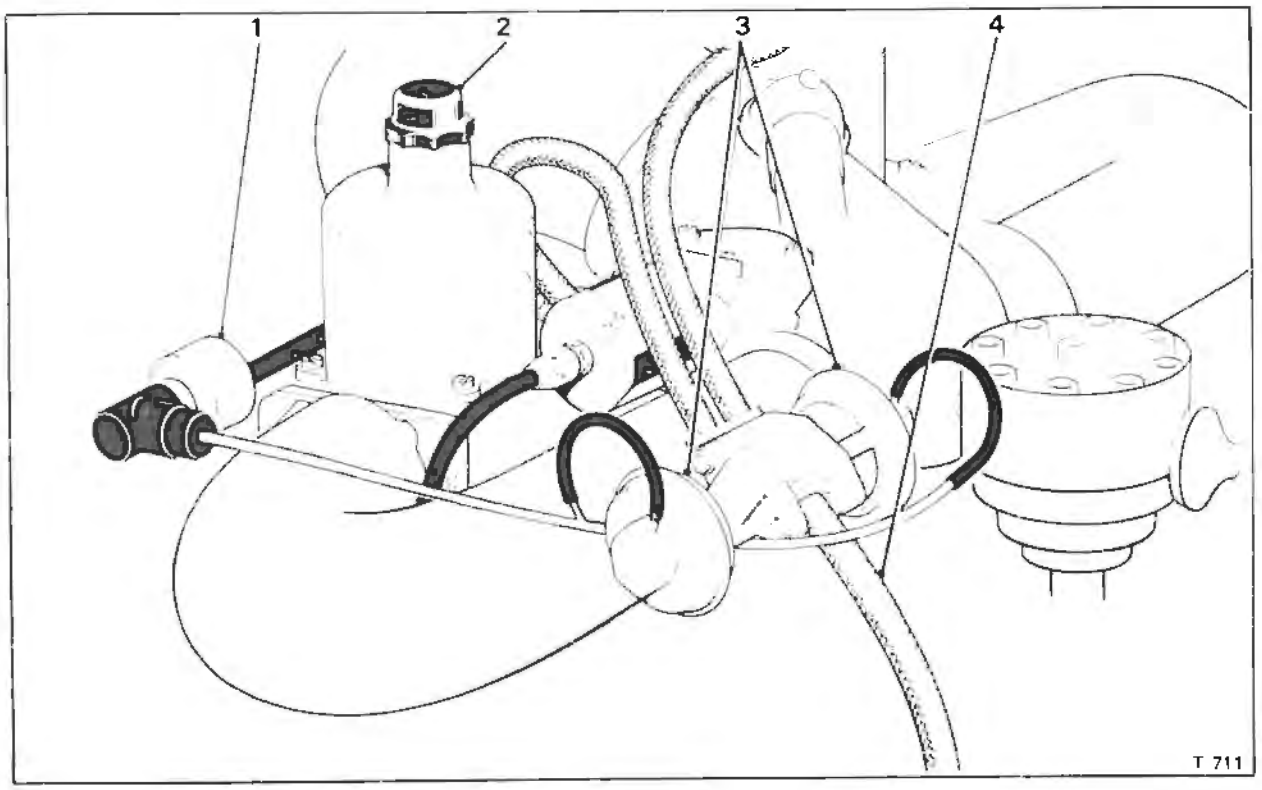

Fig. U9 Exhaust gas recirculation system
1 Weakening device and E.G.R. cut-off solenoid
2 'B' bank carburetter
3 E.G.R. valves
4 E.G.R. feed pipe

nections with compressed air.
6. Fit the distribution pipes as described in Distribution pipes - To fit.

E.G.R. valves (see Fig. U10)
A proportional flow recirculation system is used. Exhaust gas from the balance pipe between the two downtakes of the dual exhaust system passes through twin metering orifices and is recirculated into the carburetter 'tee' piece. Atmospheric pressure is maintained downstream of the metering orifices by means of the control valves so that the recirculation flow is proportional to the relative effective areas of the metering orifices and the main exhaust system.

Dilution of the inlet charge with exhaust gas lowers the peak combustion temperature and reduces the formation of oxides of nitrogen.

Twin vacuum operated control valves each with an integral pressure transducer are used and the metering orifice of each valve is incorporated in an extension of the valve seat. A carburetter throttle gated vacuum signal is used to operate the valve. This signal is modulated by the integral transducer valve and applied to the control valve diaphragm so that the control valve lift is adjusted to maintain a constant control pressure, just above atmospheric pressure between the metering orifice and the control valve seat.

When the engine load is increased, the control pressure exceeds the transducer valve setting and the transducer valve closes applying the full vacuum signal to the control valve diaphragm and thus opening the control valve and increasing the E.G.R. flow. Similarly, as the engine load is reduced, the control pressure becomes less than the transducer valve setting and the transducer valve opens, venting the diaphragm chamber to atmosphere and causing the control valve to close and reduce the E.G.R. flow. The transducer valve constantly cycles adjusting the control valve lift to maintain a constant control pressure under all normal operation conditions.

The use of a throttle gated vacuum signal ensures complete control valve closure at idle to maintain good idle quality.

To improve starting and drive-away under low temperature conditions a solenoid valve (see Section U7) interrupts the carburetter vacuum signal to the E.G.R. valves until a predetermined air intake temperature is reached.

A micro-switch operated by the accelerator pedal (see Section U7) also controls this solenoid to provide E.G.R. cut-out at full throttle. At high engine speed the exhaust gas back pressure is high. As a result, the integral transducer valve directs full carburetter vacuum signal to the control valves. At high engine speed under full throttle operation the air intake restriction is sufficient to produce a carburetter vacuum signal large enough to open the control valves, this results in excessive

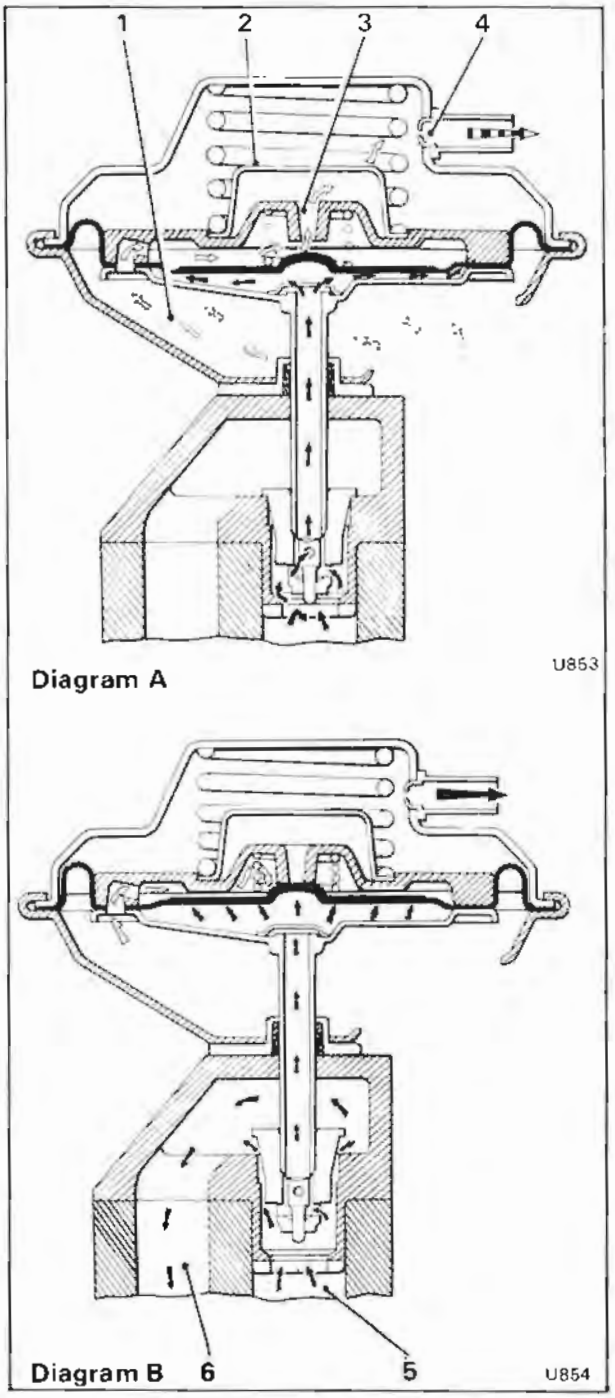

Fig. U10 Exhaust gas recirculation valve
Ambient air ⇦
Exhaust gas ⬅

Diagram A - Exhaust pressure below operating value
1 Ambient air
2 Air filter
3 Air bleed
4 Restrictor

Diagram B - Exhaust pressure above operating value
5 Exhaust gas from balance pipe
6 Exhaust gas to carburetter 'tee' piece

Printed in England
© Rolls-Royce Motors Limited 1980

flow under these conditions which would seriously degrade performance and reduce the safety margin for overtaking.

E.G.R. valves - To remove

1. Detach the small diameter rubber hose from the valve.
2. Unscrew and remove the two ½ in. A/F nuts retaining the valve to the mounting flange; collect the two washers.
3. Withdraw the valve and remove the gasket from the mounting flange.
4. Repeat Operations 1 to 3 inclusive on the second valve.

E.G.R. valves - To fit

Fit the valves by reversing the procedure for removal, noting the following points.

1. Ensure that the valve pintle (see Fig. U10) is secure on the valve stem.
2. Ensure that the valve and mounting flange joint faces are clean and free from carbon deposits.
3. Always use a new mounting flange gasket.

E.G.R. valves - To clean

1. Remove the valves as described in E.G.R. valves - To remove.
2. Using a scraper, remove all carbon film from the valve and mounting flange faces; complete the operation with a wire brush.
3. Clean the carbon from the valves using a wire brush fitted into a portable drill. Take care not to damage the valve seating area.
4. Thoroughly blow out the valves with compressed air to ensure that all loose carbon particles are removed.
5. Upon completion of the cleaning operations, fit the valves to the engine mounting flange as described in E.G.R. valves - To fit.

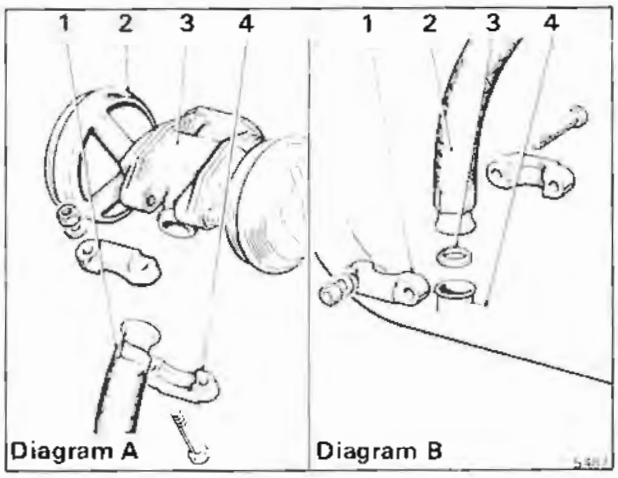

Fig. U11 E.G.R. feed pipe joints

Diagram A - Upper joint

1 Feed pipe
2 E.G.R. valve
3 E.G.R. valve mounting block
4 Clamp bracket

Diagram B - Lower joint

1 Clamp bracket
2 Feed pipe
3 Sealing ring
4 Exhaust balance pipe

E.G.R. valves - To check

The E.G.R. system is automatically controlled by exhaust backpressure to maintain a constant E.G.R. proportion over normal road load conditions. Checks to ensure the correct operation of the valves are only required under no load conditions as follows.

1. Connect an electric impulse tachometer to the engine in accordance with the manufacturer's instructions.
2. Ensure that the parking brake is firmly applied and that the gear range selector is in the 'Park' position.
3. Ensure that the pressure tapping cap fitted to the weakening device is correctly tightened.

Start and run the engine until normal operating temperature is attained.

4. Ensure that the engine has run for at least 25 mins. after the engine coolant thermostat has opened.
5. Allow the engine to return to the idle speed.
6. Increase the engine speed slowly noting the operation of the E.G.R. valves.
7. The E.G.R. valves should commence to open between 800 r.p.m. and 1 000 r.p.m.

If the valves either fail to open or open late check for the following possible causes.

a. Failed E.G.R. cut-out switch (see Section U7).
b. Failed E.G.R. cut-off solenoid (see Section U7).
c. Failed E.G.R. full throttle cut-out micro-switch (see Section U7).
d. Leak or blockage in the carburetter signal pipe to weakening device cut-off solenoid.
e. Leak or blockage in the E.G.R. valve signal pipe or hose from the E.G.R. cut-out solenoid to the E.G.R. valves.
f. Advanced ignition timing (see Section U6).

If the valves begin to open early check for the following possible cause.

a. Retarded ignition timing (see Section U6).

8. If the E.G.R. valves do not function correctly after carrying out Operations 1 to 7 inclusive, replace the offending valve(s) with new units.
9. Carry out Operations 1 to 7 inclusive.

E.G.R. feed pipe (see Fig. U5)

The E.G.R. feed pipe conveys exhaust gas that is to be recirculated from the exhaust balance pipe to the exhaust gas recirculation valves.

E.G.R. feed pipe - To remove

1. Unscrew the two $^{7}/_{16}$ in. A/F nuts from the

clamp at the upper end of the feed pipe (see Fig. U11).
2. Collect the two washers and 'split' the clamp from the spherical joint.
3. Repeat Operations 1 and 2 on the lower joint adjacent to the exhaust system balance pipe. Collect the sealing ring.

E.G.R. feed pipe - To fit
Fit the E.G.R. feed pipe by reversing the procedure given for removal, noting the following.
1. Ensure that the joint faces are clean and free from carbon deposits.

E.G.R. valves heatshield - To remove
1. Slacken the two forward ½ in. A/F nuts one on either side of the mounting flange.
2. Unscrew and remove the two 7/16 in. A/F set-screws retaining the heatshield to the rear of 'B' bank air horn; collect the washers.
3. Ease the assembly forward to release the heatshield slots from the retaining studs.
4. Withdraw the heatshield.

E.G.R. valves heatshield - To fit
Fit the heatshield by reversing the procedure given for removal.

Oxidation catalyst (see Figs. U5 and U12)

A dual exhaust system is used. The catalytic converters are situated in the forward underfloor area, in place of the conventional front silencers (see Fig. U5).

Each converter contains two catalyst blocks of unequal length and has sufficient volume to perform the dual functions of converter and silencer (see Fig. U12). Two converters are fitted to each car, one for each bank of the engine cylinders.

A platinum group metal catalyst on a ceramic monolith support has been chosen for optimum conversion efficiency and rapid warm-up. Two separate blocks are used to minimise the effect of thermal shock, and these are positioned to give good gas distribution and effective utilisation of the catalyst volume.

The catalyst promotes the reaction between the residual hydrocarbons and carbon monoxide in the exhaust and the secondary air injected into the exhaust ports.

Catalytic converter protection
To protect the catalytic converters from damage due to overheating (caused by engine malfunction) a warning system (see Fig. U40) is fitted to the exhaust catalytic converters. This warning system will illuminate a red warning lamp on the facia if the temperature becomes excessive in any of the areas mentioned.

Note
If an exhaust overheat condition is signalled the speed of the vehicle must be reduced to 50 k.p.h. (30 m.p.h.) and this speed must not be exceeded until the cause of the overheat warning has been investigated and corrected by an authorised Franchise holder.

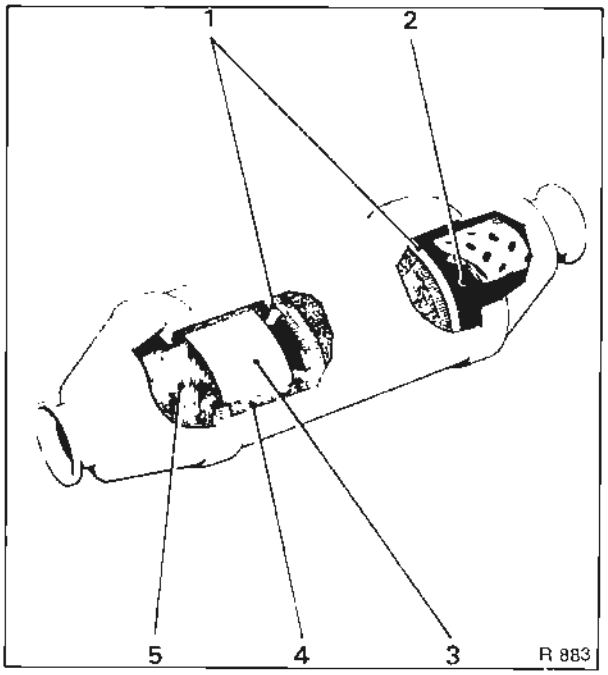

Fig. U12 Catalytic converter assembly
1 Stainless steel mesh retaining rings
2 Silencing chamber
3 Fireclay coating
4 Stainless steel mesh
5 Monolithic catalyst

Further protective measures to be observed are as follows.

Unleaded gasoline

Use unleaded gasoline only (88 RON Min.). The use of leaded gasoline will result in a substantial reduction in the performance of the catalyst. Under no circumstances add fuel system cleaning agents to either the fuel tank or carburetters for induction into the engine, as these materials may have a detrimental effect on the catalytic converter.

Fuel

Do not allow the vehicle to run out of fuel. If the vehicle does run out of fuel at a high speed, possible damage to the catalyst could result.

Engine malfunction

If the engine misfires or suffers from a lack of

Printed in England
© Rolls-Royce Motors Limited 1980
April 1980
TSD 4200
(Japan
1980 Model year)

power which could be attributed to a malfunction of either the ignition or fuel systems, the vehicle should be driven only at low speed and the fault rectified as soon as possible. Driving at high speeds with a malfunction in either of these systems could cause overheating and consequent damage to the catalyst.

Catalytic converter - To remove

1. Remove the screws retaining the relevant section(s) of the grass-fire shields below the catalytic converter.

Note

Take care when removing the shields as the sharp edges could cause injury to the operators hands.

2. Unscrew the adapter and withdraw the catalyst overheat sensor (see Fig. U39).
3. Using a 9/16 in. A/F spanner, slacken the nuts on the spherical joint clamps immediately to the front and rear of the catalytic converter.
4. Support the weight of the catalytic converter and remove the nuts from the spherical joint clamps. Dismantle and remove the clamps.
5. Withdraw the catalytic converter and collect the spherical sealing rings from between the pipe connections.

Catalytic converter - To fit

Fit a catalytic converter by reversing the procedure given for removal, noting the following.

1. The sealing rings and pipe flares must be thoroughly clean and free from scale and may be lightly dressed with fine emery cloth if required.
2. The clamp bolt threads should be lightly oiled to prevent binding during assembly and the spherical faces of the sealings rings and the grooves in the clamps should be smeared with a graphite lubricant, to ensure correct alignment of the pieces on assembly.
3. Fit the catalytic converter assembly complete with sealing rings, then loosely fit the joint clamps.

Note

The catalytic converter assembly should be fitted with the square shaped catalyst cells (visible when looking along the short pipe into the catalytic converter assembly) towards the front of the vehicle and the perforated tube (visible when looking along the short pipe into the catalytic converter assembly) towards the rear of vehicle.

The sealing rings should be fitted between the pipe connections so that the sealing ring with the smaller diameter hole in the centre is fitted to the rear of the catalytic converter assembly.

Section U3

Fuel evaporative emission control system

The Fuel Evaporative Emission Control System eliminates direct venting of the fuel system, thus preventing the release of hydrocarbons into the atmosphere.

Vapour from the fuel system is collected and stored in a charcoal filled canister. The canister is purged whenever the engine is running and the stored fuel vapour is extracted from the charcoal and burnt in the engine.

The system is illustrated in Figure U13 and comprises the following main components.

Canister (see Fig. U14)
Carbon granules (charcoal)
Float chamber connection
Fuel tank connection
Polurethane air filter
Purge line connection
Weakening device connection

Fuel tank (see Fig. U16)
Combined pressure/vacuum relief valve
Expansion tank
Fuel trap assembly

Purge line (see Fig. U13)
Air filter
Restrictor

Weakening device (see Figs. U18 and U19)
Adjustable orifice
Air filter
Anti 'run-on' solenoid
Cut-off solenoid
Cut-out switch
Float chamber drain valve
Float chamber vent valve
Fuel receiver chamber
Non-return valves
Venturi chamber

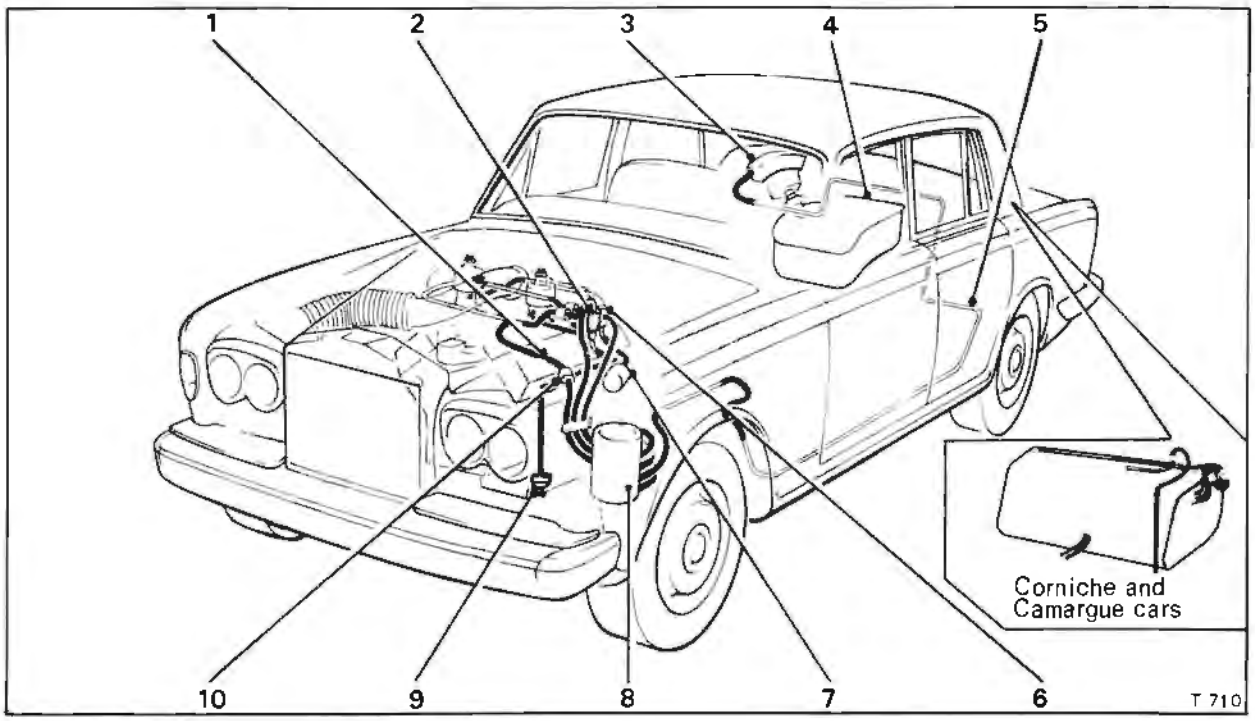

Fig. U13 Fuel evaporative emission control system

1 Purge line restrictor
2 Float chamber vent valve
3 Fuel trap assembly
4 Fuel tank
5 Fuel vapour line
6 Weakening device
7 Weakening device filter
8 Evaporative loss control canister
9 Float chamber drain valve
10 Purge line filter

Printed in England
© Rolls-Royce Motors Limited 1980
April 1980
TSD 4200
(Japan
1980 Model year)

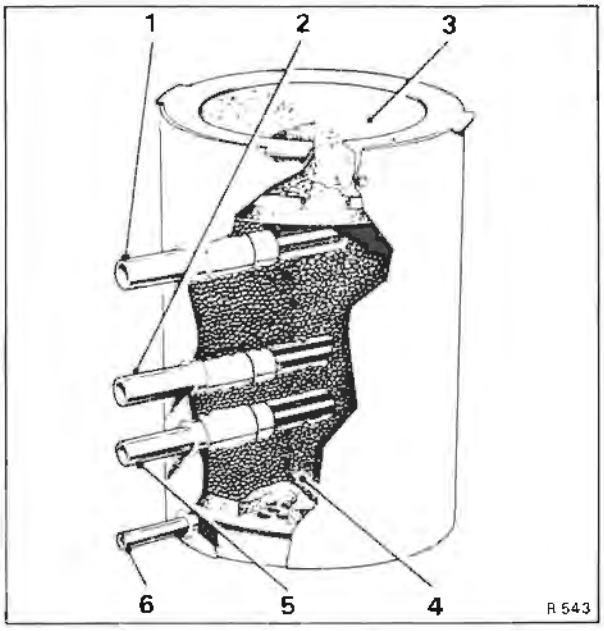

Fig. U14 Control canister
1 Weakening device connection
2 Float chamber vent connection
3 Polyurethane filter
4 Carbon
5 Fuel tank vent connection
6 Purge line connection

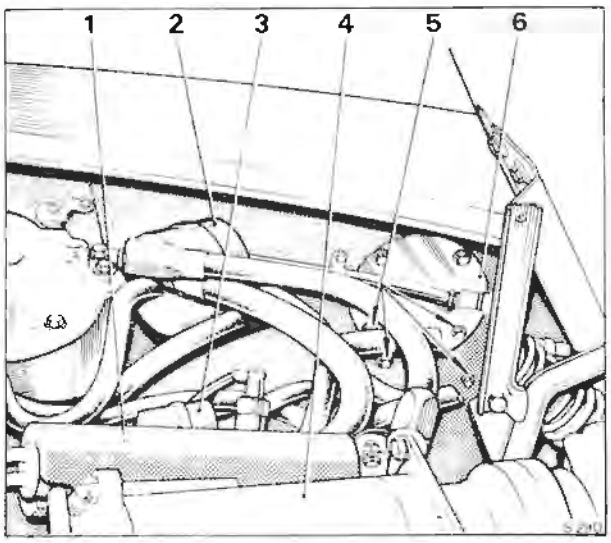

Fig. U15 Foam filter access cover, purge line filter and weakening device filter
1 Fuel cooler
2 Weakening device filter
3 Purge line filter
4 Refrigeration compressor
5 Canister securing setscrews
6 Foam filter access cover

For details of the servicing and maintenance requirements of the Fuel Evaporative Emission Control System, refer to the Service Schedules Manual - T.S.D. 4117.

Control canister (see Figs. U13 and U14)
The evaporative emission control canister is situated under the left-hand front wing. It is a cylindrical container filled with activated carbon granules which absorb and retain fuel vapour. There are connections for the mixture weakening device vent, the fuel receiver vent, the fuel tank vent and the purge line. The top of the canister is open to atmosphere and contains a Polyurethane foam filter element.

When the engine is running air is drawn from the atmosphere through the foam filter element and carbon granules to the lowest connection on the canister. The air, containing fuel vapour from the carbon granules then passes into the engine via the purge line.

Control canister - To remove
1. Remove the front left-hand road wheel as described in Chapter R.
Note
Left-hand is determined when viewed from the driver's seat.
2. Remove the front section of the underwing sheet by unscrewing the small screws situated around the outer edge of the sheet. Resistance may be experienced when the sheet is being freed, as it is sealed around the edge with a sealing compound (i.e. Bostik Seelastik).
3. The canister will be clearly visible towards the front of the vehicle.
4. Using the special pliers (RH 8090), remove the steel retaining clips from the four hose connections to the canister. Label the hoses to facilitate identification and withdraw the four hoses from the canister.
5. Raise the bonnet and from inside the engine compartment locate the canister foam filter access cover (see Fig. U15).
6. Unscrew and remove the four setscrews indicated as securing setscrews in Figure U15. Before removing the final setscrew support the control canister.
7. Withdraw the canister from beneath the wing.

Control canister - To fit
Fit the canister by reversing the procedure described for removal, noting the following points.
1. Ensure that the rubber hoses are in a good condition and new hose retaining clips are fitted.
2. Ensure that the underwing sheet is sealed with a suitable compound (i.e. Bostik Seelastik).

Printed in England

Polyurethane foam filter element - To renew
It is not necessary to remove the canister from the car in order to extract the polyurethane foam filter element. A detachable cover is situated in the left-hand valance (see Fig. U15).

1. Unscrew the four screws retaining the access cover, lift off the cover and withdraw the filter element from the top of the canister.

When fitting a new element, ensure that it is correctly positioned inside the retaining rim of the canister. Fit the access cover and tighten the setscrews.

Fuel tank (see Fig. U16)
On Silver Shadow II, Silver Wraith II and Bentley T2 cars, the fuel tank is vented from three positions to the fuel trap assembly which is mounted above the fuel filler. One vent is from the fuel filler neck and the others are from the fuel tank.

The three vent lines join at a common junction block situated adjacent to the fuel filler neck, the main vent line then passes to the fuel trap assembly.

From the fuel trap a vent line passes under the floor of the car to the evaporative loss control canister.

The fuel trap assembly acts as a liquid separator and prevents liquid fuel from being transferred to the evaporative loss control canister under severe driving manoeuvres when the fuel tank is full or during expansion of the fuel at high ambient temperatures.

A combined relief and vacuum valve fitted into the end of the fuel trap assembly prevents an excessive pressure 'build up' in the fuel tank due to vaporisation or depression (as fuel is consumed) in the event of a blockage in the vent line to the evaporative loss control canister.

Included in the main fuel tank is a small expansion tank (see Fig. U16) of 3,125 litres (5.5 Imp. pt. - 6.7 U.S. pints) capacity. The expansion tank inhibits complete filling of the main fuel tank and provides additional fuel expansion volume to contend with extreme temperature conditions.

When the car is being filled with fuel, the main fuel tank (without an expansion tank) could normally be completely filled, leaving only the filler neck,

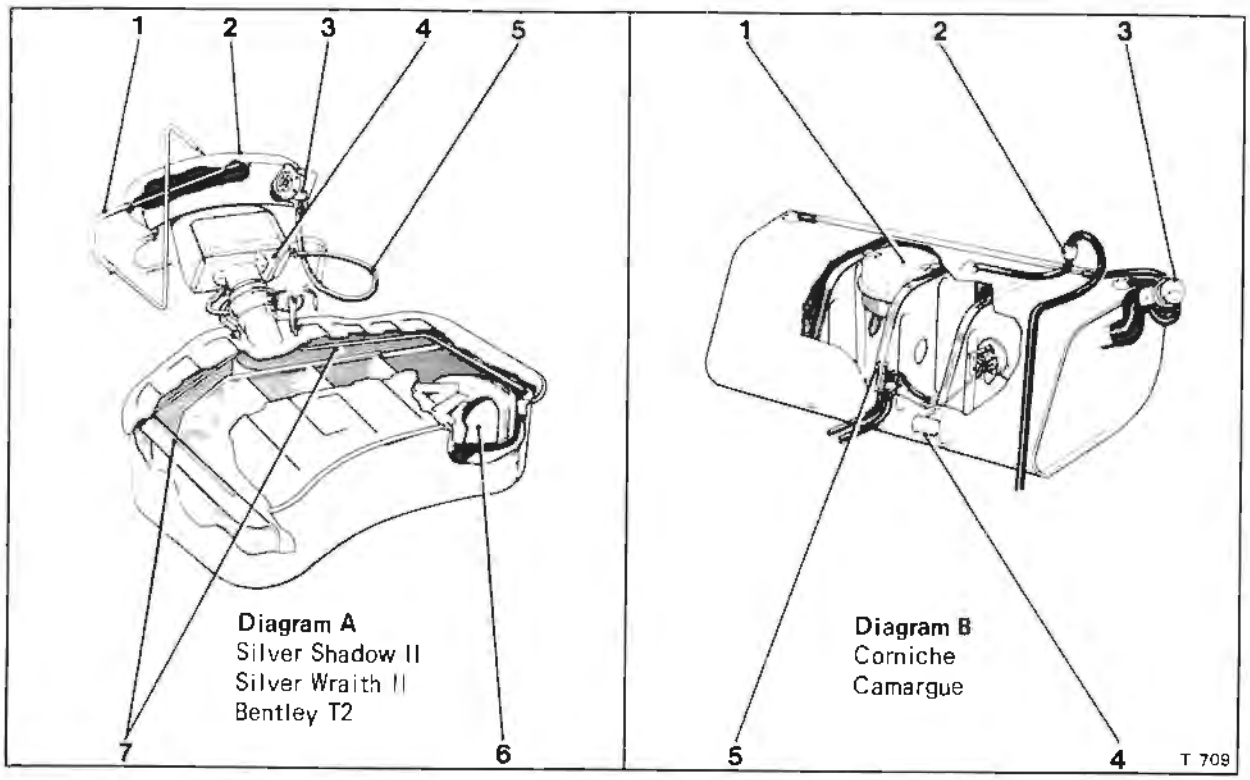

Fig. U16 Fuel evaporative emission control system - fuel tank assembly

1 Fuel vapour line
2 Fuel trap assembly
3 Combined relief and vacuum valve
4 Fuel filler box
5 Relief valve vent
6 Expansion tank and overfill limiter
7 Vent pipes

1 Expansion tank and overfill limiter
2 Rollover valve
3 Fuel filler cap (incorporating combined relief and vacuum valve)
4 Fuel tank float
5 Nylon 'in tank' filter

© Rolls-Royce Motors Limited 1980

April 1980
TSD 4200
(Japan
1980 Model year)

vent connector pipes and fuel trap assembly to accommodate the expansion of the fuel. An expansion tank is therefore situated in the upper part of the main fuel tank and as the fuel level rises above the lower part of the assembly it flows inside through two small holes in the base. Two additional holes in the top of the expansion tank allow air to escape.

On Corniche and Camargue cars, the fuel tank is vented via two connections to the filler neck allowing adequate venting of the tank during filling. A separate vapour line passes via a rollover valve from the tank, under the floor on the left-hand side of the car, to the evaporative loss control canister. The rollover valve prevents liquid fuel from entering the evaporative emission control canister during harsh manoeuvres or in the event of vehicle rollover. Fuel vapours pass freely through the valve. The fuel tank is illustrated in Figure U16.

In the event of a blockage in the vapour line to the evaporative loss control canister, a combined pressure and vacuum relief valve in the fuel filler cap prevents an excessive pressure build up in the fuel tank due to fuel vaporisation or depression, as the fuel is consumed.

An expansion tank situated within the main fuel tank inhibits complete filling and provides fuel expansion volume to cope with extreme temperature conditions.

For all other details of the fuel tanks refer to Chapter K.

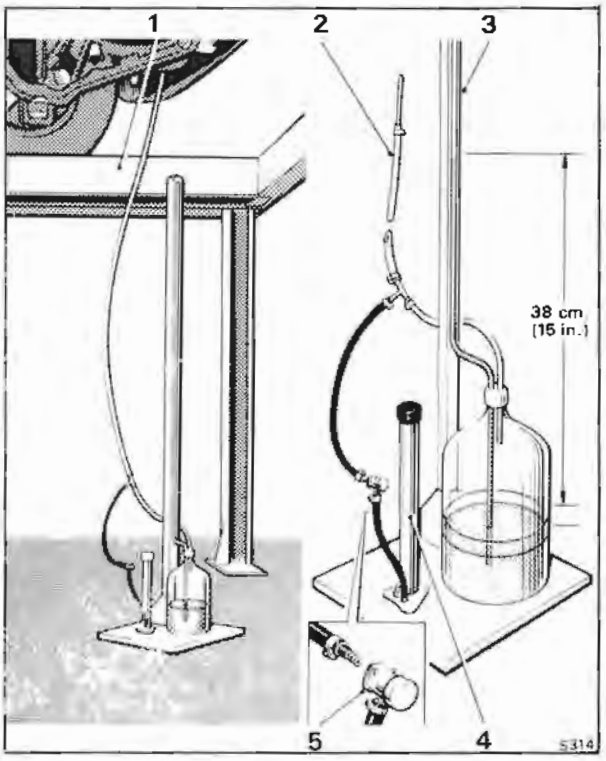

Fig. U17 Leak check test equipment

1 Ramp
2 Connection to fuel tank/canister hose
3 Test equipment
4 Pump
5 One-way pressure valve

Fuel evaporative emission control system - To leak check

Whenever the various pipes, hoses and components of the fuel evaporative emission control system are disturbed, the system should be checked for air leaks upon assembly.

To test the system proceed as follows.

1. Position the vehicle on a ramp and carry out the usual safety precautions (i.e. ensure that the gear range selector lever is in 'Park' position, the parking brake firmly applied, the engine switched off, etc.,). Raise the ramp.

2. Remove the left-hand horn assembly (left-hand is decided when standing under the vehicle, looking towards the front), see Chapter M.

3. Through the resultant gap between the front wing and wing sheet, locate the emission control canister and identify the hose connection from the fuel tank (second from the bottom).

4. Using the special pliers (RH 8090), remove the steel retaining clip from the fuel tank connection hose at the control canister.

5. The fuel tank hose should be detached from the canister and connected to the test equipment (see Fig. U17).

6. Apply air pressure to the fuel tank hose via the test equipment until a reading of 38cm. (15 in.) H_2O is attained and close the pressure supply.

7. After 5 minutes again check the pressure reading, this should not have fallen by more than 12,7 mm. (0.5 in.).

8. If the pressure drop is more than 12,7 mm. (0.5 in.), progressively treat all joints in the system with soap solution to detect air leaks.

9. Rectify any air leaks and again leak check the system.

10. When the system is satisfactory, detach the test equipment and connect the hose to the control canister, secure with a new steel retaining clip.

11. Fit the left-hand horn assembly as described in Chapter M.

Purge line

The purge line consists of a rubber hose, passing from the lowest connection on the canister through the valance junction piece to the induction manifold connection on the opposite side of the engine (see Fig. U13). Incorporated into this hose is the purge line filter and restrictor.

When the engine is running, air drawn through the canister filter and carbon picks up the stored fuel vapours and passes them via the hoses, to the induction system at a point just below the choke

housing. The restrictor in the line controls the flow rate at between 1,41 cu.m. per/hr. and 1,98 cu.m. per/hr. (50 cu.ft. per/hr. and 70 cu.ft. per/hr.) to maintain carburetter metering accuracy and the paper element line filter is fitted to prevent blockage of the restrictor.

Purge line filter
The purge line filter is situated on the left-hand valance just forward of the front road spring pot (see Fig. U15). The air filter assembly is a sealed unit and no attempt should be made to clean the element.

At the mileage intervals specified in the Service Schedules the purge line filter should be removed and a new assembly fitted as follows.

Purge line filter - To remove
1. Using the special pliers (RH 8090) remove the two steel retaining clips situated one on either side of the filter assembly.
2. Detach the inlet and outlet hoses.
3. Slacken the small setscrew that secures the clamp bracket around the filter assembly.
4. Swivel the clamp bracket to enable the filter assembly to be withdrawn.

Purge line filter - To fit
Fit the purge line filter by reversing the procedure given for removal, noting the following points.
1. Ensure that the filter assembly is fitted the correct way around; the word 'IN' moulded into the end of the casing should be towards the front of the vehicle.
2. Ensure that the rubber hoses are in a good condition and that new hose retaining clips are used.

Purge line restrictor
The purge line restrictor is situated in the purge line between the air filter and the induction manifold connection (see Fig. U13). The function of the restrictor is to maintain the air flow through the purge line within predetermined limits.

Purge line restrictor - To remove
1. Hold the restrictor firmly and slide the rubber hosing from both ends.

Purge line restrictor - To fit
Fit the restrictor by reversing the procedure given for removal, noting the following point.
1. Ensure that the purge line restrictor is fitted into the line correctly. This can be determined by comparing the diameters of the restrictor ends with those of the rubber hoses.

Purge flow rate - To check
1. Disconnect the hose from the engine side of the purge line filter and insert a flowmeter assembly (RH 8725) into the line between the filter and the restrictor. The flowmeter is a rotameter type capable of measuring between 1,4 cu.m/hr. and 2,0 cu.m/hr. (50 cu.ft/hr. and 70 cu.ft/hr.). The pressure drop across the meter must not exceed 5,08 cm.Hg. (2.0 in.Hg.).
2. Start and run the engine at 650 r.p.m.; the reading on the flowmeter should be between 1,41 cu.m/hr. and 1,99 cu.m/hr. (50 cu.ft/hr. and 70 cu.ft/hr.).
3. If the flow is less than the minimum figure quoted in Operation 2, stop the engine and substitute the purge line restrictor with a straight piece of metal pipe having an internal diameter larger than 4,76 mm. (0.187 in.).
4. Start and run the engine at 650 r.p.m.; the reading on the flowmeter should be in excess of 1,99 cu.m/hr. (70 cu.ft/hr.).
5a. If the flowmeter reading is above 1,99 cu.m/hr. (70 cu.ft/hr.) fit a new purge line restrictor and repeat Operation 2.
b. If the flowmeter reading is below 1,99 cu.m/hr. (70 cu.ft/hr.) the cause could be as follows.
(i) An air leak in any of the vacuum hoses that connect to the induction manifold connection (vacuum manifold).
(ii) A blockage in the vacuum manifold or any of the connecting hoses.

Any leaks or blockages should be rectified; the restrictor should be fitted and Operation 2 repeated. If the flow rate is still incorrect fit a new restrictor and again, repeat Operation 2.
6. Remove the test equipment and connect the hose to the purge line filter.

Weakening device
The mixture weakening device (see Fig. U19) is fitted adjacent to 'B' bank carburetter and incorporates a fuel receiver.

For any given position of the fuel metering needle, the rate of the discharge from the carburetters is governed by the difference in air pressure existing over the fuel in the float chamber and that over the jet.

The weakening device is designed to reduce the air pressure (create a depression) in the float chamber at part throttle, thereby reducing the rate of discharge from the jet.

The weakening device housing contains two chambers, (see Fig. U18), the venturi chamber, and the fuel receiver chamber, the two being interconnected by a passage and an adjustable venturi.

The venturi chamber is connected to a small drilling on the edge of the butterfly plates of both carburetters via the weakening device solenoid valve, with the throttle slightly open the drillings are subjected to manifold depression thus creating a depression in the venturi chamber which draws air from the weakening device air filter. This depression is also apparent in the fuel receiver

Printed in England
© Rolls-Royce Motors Limited 1980

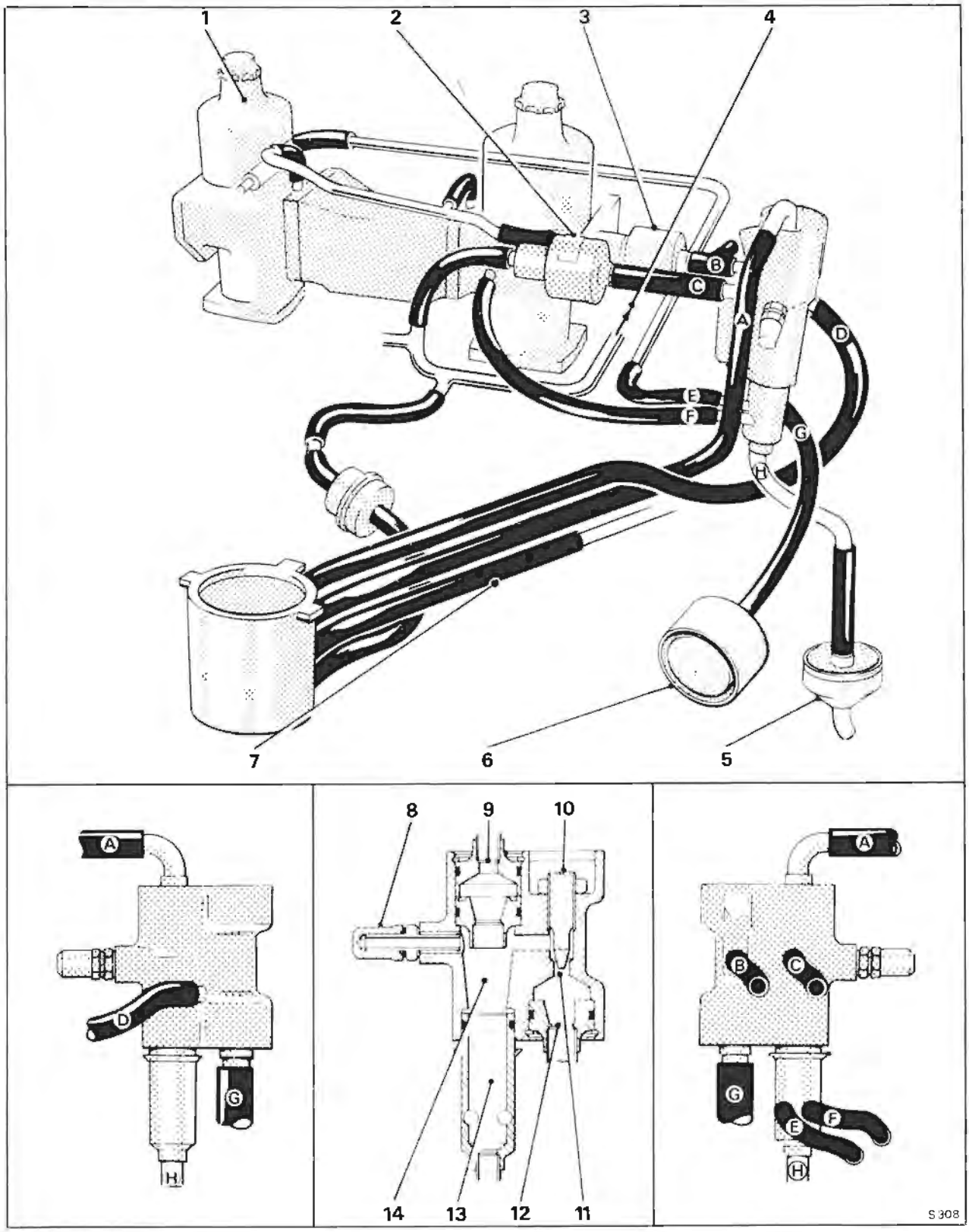

Fig. U18 Mixture weakening device

1 'A' bank carburetter
2 Anti 'run-on' solenoid
3 Weakening and E.G.R. systems cut-off solenoid
4 Induction manifold connection
5 Float chamber drain valve
6 Weakening system air filter
7 Vent from fuel tank
8 Weakening device signal cap
9 Float chamber vent valve
10 Adjusting screw
11 Venturi chamber
12 Air intake valve
13 Fuel receiver
14 Fuel receiver chamber

chamber and subsequently in the carburetter float chambers.

The value of the depression is set by the position of the weakening device adjusting screw.

To obtain adequate float chamber venting to cope with hot soak conditions there is an additional vent from the fuel receiver. This incorporates a low pressure non-return valve to maintain float chamber depression under normal running conditions. In addition to this valve, a one-way valve is fitted into the venturi chamber to prevent any evaporating fuel being discharged to atmosphere.

A float chamber drain, also incorporating a low pressure non-return valve is mounted at the front of the engine adjacent to the oil filter, this valve is connected to the fuel receiver. Should flooding occur the head of fuel in the receiver is sufficient to open the drain valve thus preventing engine stalling if the float chamber needle valves stick.

Weakening device - To remove

1. Label all hoses connected to the weakening device assembly, this will facilitate assembly.
2. Disconnect all hoses to the weakening device.
3. Unscrew and remove the two small setscrews that retain the weakening device to the solenoid platform; the two screws are situated just below the pipe/hose connections for the anti 'run-on' solenoid and weakening device cut-off solenoid.
4. Withdraw the weakening device.

Weakening device - To fit

Fit the weakening device by reversing the procedure given for removal, noting the following point.

1. Ensure that all hoses connecting to the assembly are in a good condition and that all connections are 'air tight'.

Weakening device - To dismantle (see Fig. U18)

1. Remove the weakening device from the vehicle.
2. Remove the small screw that secures the fuel receiver assembly into the base of the weakening device, withdraw the assembly.
3. Unscrew the weakening device signal cap, collect the cap fibre washer. Unscrew the signal line adapter from the casting and withdraw the aluminium washer from the adapter.
4. Remove the circlip from the top of the fuel receiver chamber, withdraw the float chamber vent pipe (slight resistance may be felt due to the rubber sealing ring). With a soft drift (e.g. wooden pencil), push the float chamber vent valve out of the weakening device assembly (the drift is required because the rubber sealing ring fitted around the vent valve will cause a small resistance).
5. Remove the circlip from the base of the venturi chamber, withdraw the **air intake pipe** containing a one-way valve (slight resistance may be felt due to the rubber sealing ring).
6. Remove the **anti-tamper cover** from the top of the venturi chamber, unscrew the lock-nut and using a screwdriver unscrew the **adjusting screw.**

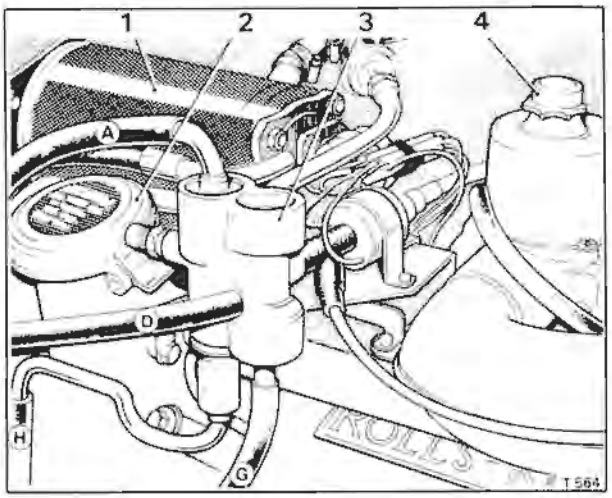

Fig. U19 Position of mixture weakening device
1 Refrigeration compressor
2 Engine oil filler
3 Mixture weakening device
4 'B' bank carburetter

Weakening device - To assemble

To assemble the weakening device, reverse the procedure given for removal, noting the following.

1. Ensure that all components are clean before assembly.
2. Ensure that the rubber sealing rings are in a good condition and lightly smeared with the minimum amount of grease. Ensure that no grease is applied to the valves otherwise a malfunction may occur due to the grease making the valves stick.
3. After assembly, the operator should check that he can blow but not suck on the metal pipes, one on top of the fuel receiver chamber and the other at the bottom of the venturi chamber.

Weakening device signal strength - To check

The **float chamber depression** should be checked as follows.

1. Start and run the engine until normal setting conditions are attained (i.e. engine cooling system thermostat opened, air conditioning unit switched off and the automatic choke is off).
2. Stop the engine.
3. Connect an electric impulse tachometer to the engine in accordance with the manufacturer's instructions.
4. Isolate the E.G.R. valves from the weakening system by disconnecting the E.G.R. signal hose from the rubber 'tee' piece,located between the weakening system cut-off solenoid and the weakening device. Blank off the 'tee' piece connection.

Printed in England
© Rolls-Royce Motors Limited 1980
April 1980
TSD 4200
(Japan
1980 Model year)

5. Unscrew and remove the weakening device signal cap and connect a 0 to 15,5 cm. (0 to 6 in.) water manometer to the weakening device adapter.
6. Start and run the engine at 2 000 r.p.m. in 'Park' until a steady manometer reading is obtained, this should be 5,08 cm. (2.0 in.) of water depression.

A low or zero reading may be caused by
a. A blockage in the weakening device venturi to the weakening device cut-off solenoid.
b. A blockage or restriction in the signal pipe(s).
c. An air leak in the hoses or pipes from the float chambers to the emission control canister.
d. Faulty float chamber vent valve or drain valve.
e. Low engine temperature [below 14° C. (57° F.)] a faulty weakening device solenoid or weakening device switch.

A high reading may be caused by
a. An obstruction in the weakening device bleed orifice (weakening device signal strength adjusting screw).
b. Obstructed weakening device air filter or evaporative loss control canister.
c. Incorrect connection or blockage in the weakening device to either the valance connection or the evaporative loss control canister.
d. Weakening device air intake valve sticking closed.
e. Obstructed weakening device air filter hose.
f. Incorrect operation of anti 'run-on' solenoid.
7. If the float chamber depression is still incorrect after checking through the possible causes in Operation 6, set the weakening device signal strength (float chamber depression) by unlocking and turning the adjusting screw (see Fig. U18) until the correct manometer reading is obtained. Turning the adjusting screw clockwise increases the depression.
8. Remove the blank from the weakening system 'tee' piece and connect the E.G.R. hose.
9. Raise the engine speed slowly noting both the manometer and tachometer readings. The maximum steady manometer reading should be obtained between 1 200 r.p.m. and 1 500 r.p.m.
10. Allow the engine speed to return to the idle setting (650 r.p.m.) and check the float chamber depression reading on the manometer.
If the float chamber depression at idle speed is above 10,16 mm. H_2O (0.4 in. H_2O) check the ignition timing at idle as this condition may result in unsatisfactory driveability.
11. Fit the tamperproof cover into the top of the venturi chamber.

Weakening device air filter - To remove
The air filter container is mounted on the left-hand valance just forward of the road spring pot (see Fig. U15).

This is a sealed unit and no attempt should be made to clean the element.
1. To remove the air filter assembly, detach the hose and unscrew the worm drive clip situated around the assembly.
2. Withdraw the assembly.

Weakening device air filter - To fit
Fit the air filter container by reversing the procedure given for removal.

Section U4

Crankcase emission control system

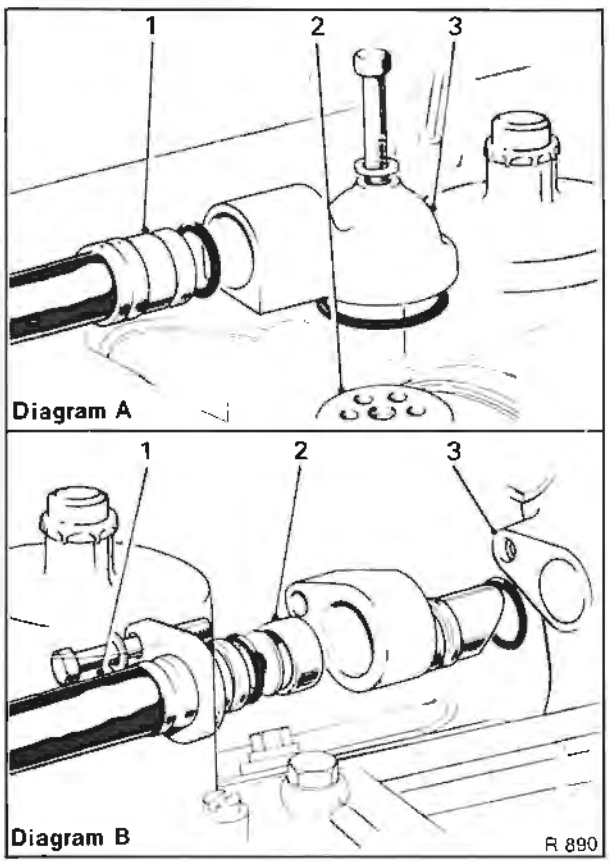

Fig. U20 Crankcase breather pipe connections

Diagram A	Diagram B
1 Breather tube	1 Breather tube
2 Choke housing	2 Flame trap
3 Breather connection	3 Oil filler housing

Crankcase emissions are controlled by a recirculatory closed breather system.

An insulated draught tube connects the crankcase via the oil filler which is fitted with a sealed cap, to the choke housing upstream of both the choke butterfly and the carburetters. A flame trap capsule containing three wire mesh discs is fitted in a housing at the crankcase end of the draught tube. Engine emission (blow-by) is drawn into the induction system via the draught tube, due to the depression in the choke housing.

1. The flame trap fitted to the breather pipe should be cleaned in the following manner, at the specified mileage.
2. Unscrew the setscrew securing the breather pipe connection to the oil filler pedestal; withdraw the connection from the pedestal (slight resistance may be felt due to the rubber 'O' ring connections).
3. Withdraw the connection from the pipe flange and collect the restrictor.
4. Wash the flame trap assembly in clean fuel then dry with compressed air from a high pressure air line. The flame trap assembly consists of 3 gauzes crimped together as shown in Figure U20.
5. To clean the adapter fitted to the choke housing, remove the single setscrew from the breather pipe end connection and detach the pipe.
6. Clean the adapter fitted to the choke housing and ensure that the holes in the adapter are clear.
7. Assembly of the flame trap and breather pipe is in the reverse order, ensuring that the 'O' rings are in good condition.

Printed in England
© Rolls-Royce Motors Limited 1980

Section U5

Carburetters and Automatic choke system

The Carburetter and Automatic Choke System can be seen illustrated in Figure U21 and comprises the following main components.

Automatic choke
Fast-idle
Stove pipe
(For the remainder of the Automatic Choke System refer to Chapter K).

Carburetters (see Fig. U23)
Bi-metal jet lever
Carburetter fuel filter
Carburetter idle airflow balance
Float
Float chamber
Float needle
Jet assembly
Jet needle
Overrun valve
Piston
Piston damper
Suction chamber
Tamperproof caps
Throttle disc
Throttle linkage
Viscosity compensator

Temperature controlled air intake
Air cleaner/silencer
Air blend valve
Cold air intake
Hot air scoop
Manifold vacuum hose
Resonator
Temperature sensor

Weakening device
(Refer to Section U3).

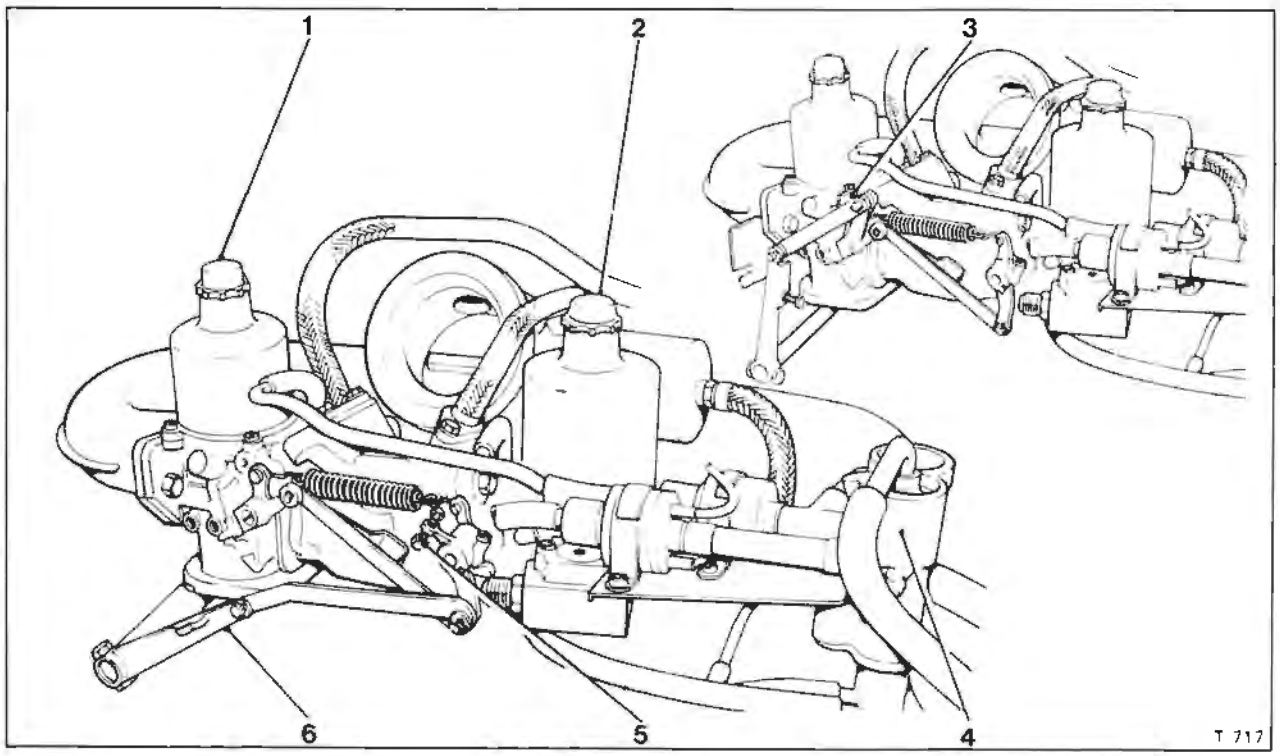

Fig. U21 Carburetters and linkage
1 'A' bank carburetter
2 'B' bank carburetter
3 Idle speed screw (L.H. drive)
4 Mixture weakening device
5 Idle speed screw (R.H. drive)
6 Manifold shaft lever (front)

Printed in England
© Rolls-Royce Motors Limited 1980
April 1980
TSD 4200
(Japan
1980 Model year)

Automatic choke

All details for the Automatic Choke System are given in Chapter K, except for the checking and setting procedures of the following.

Fast-idle - To set

1. Ensure that the usual safety precautions are carried out (i.e. parking brake firmly applied, gear range selector lever in 'Park', etc.) and connect an impulse tachometer in accordance with the manufacturer's instructions.
2. Disconnect the E.G.R. vacuum signal at the pipe from the solenoid 'Y' piece to the E.G.R. valves and blank the 'Y' piece connection.
3. Start and run the engine until normal operating temperature is attained. Stop the engine and remove the pressure tapping cap from the weakening device (see Fig. U18).
4. Open the throttles and close the choke butterfly against the bi-metal tension using control rod lever (item 1 - Fig. U22) until the adjusting screw (item 6 - Fig. U22) is resting on the tip of the fast-idle cam. At this point an extra load will be felt due to the action of the extended fast-idle plunger ceasing.
5. Start the engine, if the speed is outside a range of 850 r.p.m. to 900 r.p.m. stop the engine, open the throttles to gain access to the adjusting screw and turn the screw approximately ⅛ turn, for each 20 r.p.m. required. Tighten the lock-nut.
6. Start the engine and again check the fast-idle speed.
7. When the engine speed has been adjusted to within the prescribed limits open the throttles to release the fast-idle mechanism.
8. Stop the engine, disconnect the tachometer, remove the blank from the 'Y' piece connection at the cut-off solenoid and fit the E.G.R. signal pipe to the 'Y' piece connection. Fit the pressure tapping cap to the weakening device.

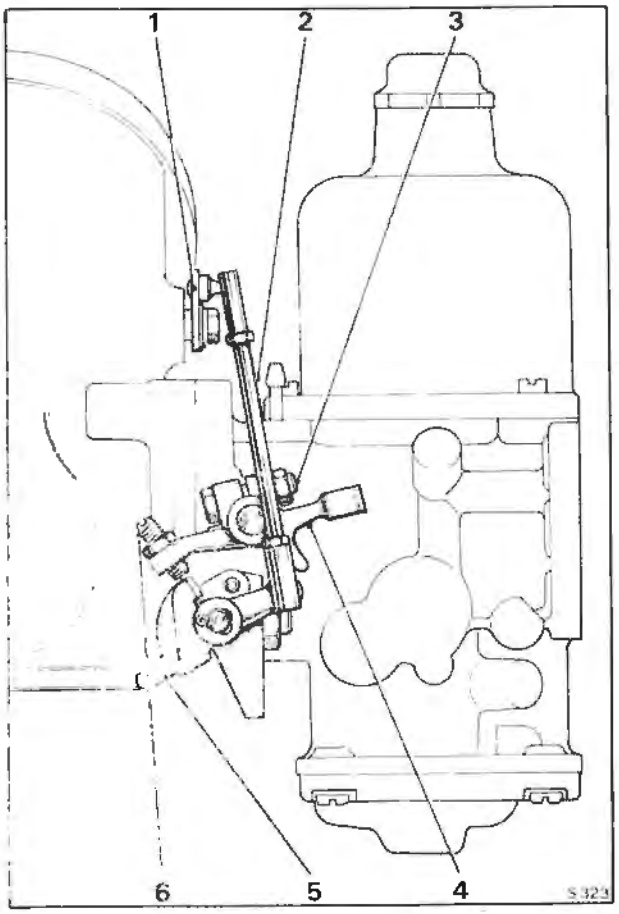

Fig. U22 Fast-idle mechanism
1 Control rod lever
2 Butterfly rod
3 Lever clamp bolt
4 'Fast-idle' lever
5 Cam
6 Adjusting screw

Choke stove pipe - To flow check

1. Ensure that the usual safety precautions are carried out (i.e. parking brake firmly applied, gear range selector lever in 'Park', etc.) and connect an impulse tachometer in accordance with the manufacturer's instructions.
2. Start and run the engine until normal operating temperature is attained. Stop the engine.
3. Disconnect the stove pipe union at the intake elbow (see Fig. U37) and connect a flowmeter (RH 8725) to the pipe via a connector (RH 8945). The flowmeter must be a rotameter type capable of measuring 2,9 cu.m/hr. (100 cu.ft/hr.).
4. Start and run the engine at idle speed (650 r.p.m.); observe the flowmeter, a correct reading is between 1,41 cu.m/hr. and 1,55 cu.m/hr. (50 cu.ft/hr. and 55 cu.ft/hr.).
5. If the flow is less than 1,41 cu.m/hr. (50 cu.ft/hr.) check the choke stove pipe unions for leaks.
6. If the flow is in excess of 1,55 cu.m/hr. (55 cu.ft/hr.), fit a new restrictor in the choke bi-metal housing (see Chapter K).

Carburetters

Two S.U. HIF7 (Horizontal Integral Float Chamber) carburetters with 4,76 cm. (1.875 in.) choke bores (see Fig. U23) are fitted to the engine on a central 'tee' piece which is mounted over an eight branch induction manifold.

This type of carburetter automatically adjusts both its choke and jet area to meet the demand of the engine which is dependent on engine speed and loading. As air is drawn through the carburetter, the piston acting as an obstruction will cause a depression to be formed in the area between the throttle and the piston. This depression is communicated by means of transfer holes in the base of the piston to the area above the piston, causing an upward force to be imposed on the piston. The piston

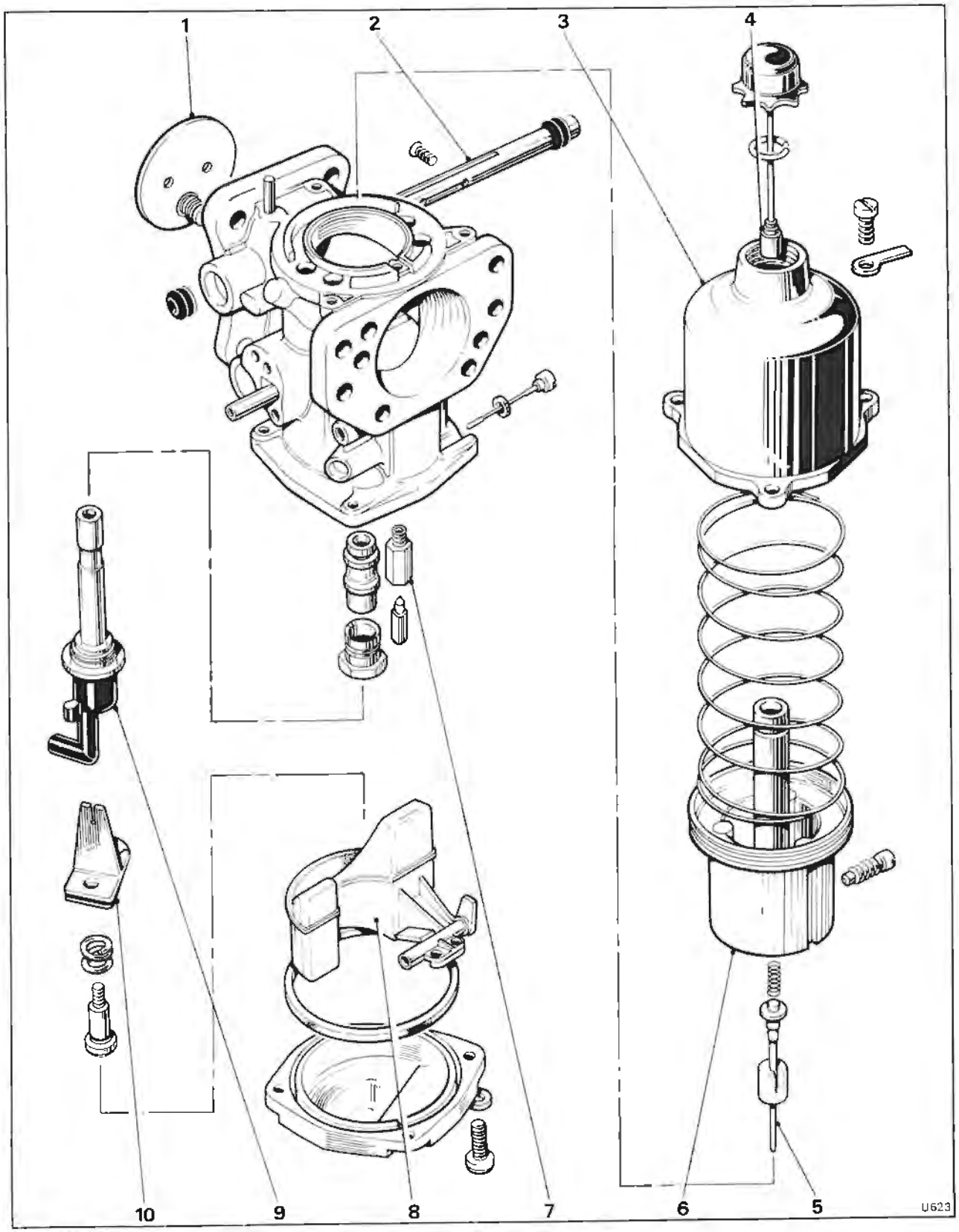

Fig. U23 SU HIF7 carburetter

1 Throttle disc with overrun valve
2 Throttle spindle
3 Suction chamber
4 Piston damper
5 Jet needle
6 Piston
7 Float needle valve assembly
8 Float
9 Jet assembly
10 Bi-metal jet lever

Printed in England
© Rolls-Royce Motors Limited 1980
April 1980
TSD 4200
(Japan
1980 Model year)

will rise in response to this force relieving the depression in the area between the piston and the throttle as it does so until a point is reached where the force acting on the piston is balanced by the weight of the piston and the load exerted by the piston spring.

A spring-loaded jet needle is fitted to the carburetters, which is biased downstream and operates in a 2,54 mm. (0.10 in.) diameter main jet; this jet does not require centralising.

Float chamber (see Fig. U24)
The float chamber is incorporated in the main body casting; access to the chamber is obtained by removing the bottom cover-plate (item 7). The moulded float (item 10) is shaped so that it surrounds the jet tube and is pivoted along a line parallel to the inlet flange. The float is retained by a spindle (items 2 and 9) which screws into the body casting.

Entry of the fuel into the float chamber is via a brass tube (item 1) in the side of the carburetter body to a needle valve assembly (item 3).

The jet is pressed into the top of an aluminium tube which is in turn pressed into a plastic moulding (item 8). This hollow moulding known as the jet head is open at its lower end allowing fuel to enter the jet tube.

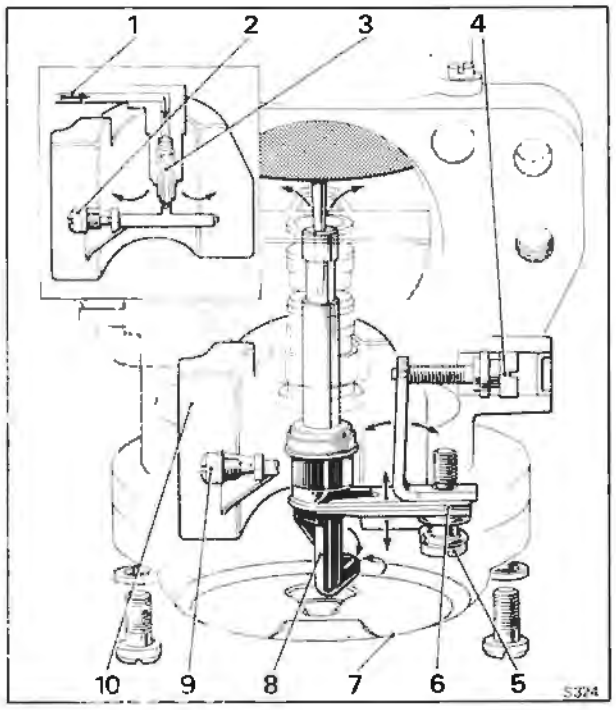

Fig. U24 Float chamber layout
1 Fuel inlet
2 Float fulcrum screw
3 Needle valve
4 Jet adjusting screw
5 Bi-metal pivot screw
6 Bi-metal assembly
7 Bottom cover-plate
8 Jet head
9 Float fulcrum screw
10 concentric float

Mixture adjustment (see Fig. U24)
The jet tube of the HIF type carburetter is moved in the vertical plane to provide mixture adjustment.

The jet adjustment assembly is comprised of a right-angled adjusting lever of unequal length arms riveted to a bi-metal blade (item 6).

The blade is cut out to accept the jet head (item 8) and the shape of the jet head is formed so that any movement of the bi-metal blade is transmitted to the jet head, moving it in the vertical plane.

The right-angled adjusting lever and bi-metal blade (item 6) are attached to the body casting by a spring-loaded retaining screw (item 5) positioned in the short arm of the lever. This attachment allows the adjusting lever to be pivoted at the outer edge of its short arm and is loaded by the spring towards the jet adjusting screw (item 4).

The jet adjusting screw is located at the outer end of the long arm of the adjusting lever; screwing the adjusting screw inward will lower the jet, enriching the mixture and unscrewing the adjusting screw will allow the spring to return the lever together with the jet, weakening the mixture.

After the mixture has been set the jet adjustment can be sealed by fitting a plug into the jet adjusting screw recess of the carburetter body.

HIF7 carburetters are set and balanced by accurate flow measuring techniques during manufacture and therefore, adjustment of the mixture screws should not be necessary.

Fuel temperature compensation (Viscosity compensator) (see Fig. U24)
This device alters the jet position in relation to the metering needle to compensate for changes in fuel viscosity which take place with changes in fuel temperature.

When the fuel temperature rises, the viscosity is lowered, and in an uncompensated assembly this would allow more fuel to flow for a given jet/needle relationship.

In the HIF jet assembly the jet head is attached to a bi-metal blade (item 6). This bi-metal is immersed in the fuel in the float chamber and will move in the vertical plane in response to changes in fuel temperature. The jet will be raised to a weaker position on the jet needle when the fuel temperature rises and will be lowered to a richer position when the temperature falls.

From this it will be seen that once the jet position has been selected by adjusting the mixture screw, alterations of fuel temperature will bring about slight alterations in jet position to compensate for the change in fuel viscosity.

The effect of this device is that driveability is

improved over wide ranges of temperature, and that exhaust emissions can be kept within closer limits during cold starting and the warm-up period. Temperature compensation also allows carburetters to have the mixture setting pre-set and sealed before the car is delivered.

Overrun valves (see Fig. U25)

During overrun (i.e. when decelerating with the throttles closed), insufficient mixture is supplied to the engine to maintain satisfactory combustion. The overrun valves alleviate this condition by allowing some mixture to pass through the throttle plates (butterflies) at high inlet manifold depressions.

An overrun valve is fitted into the throttle plate of each carburetter.

An overrun valve consists of a small disc retained in each throttle plate by a spring loaded plunger. Under normal conditions the disc is seated against the throttle plate. When the throttle is suddenly closed, the increased inlet manifold depression lifts the disc from its seating and allows a metered quantity of air/fuel mixture to pass through the throttle plate.

The action of the overrun valves maintains satisfactory combustion on overrun, thus reducing hydrocarbon emissions and controlling catalyst temperatures.

After the sudden closure of the throttles and as soon as the manifold depression falls, the overrun valve disc returns to its seat on the throttle plate.

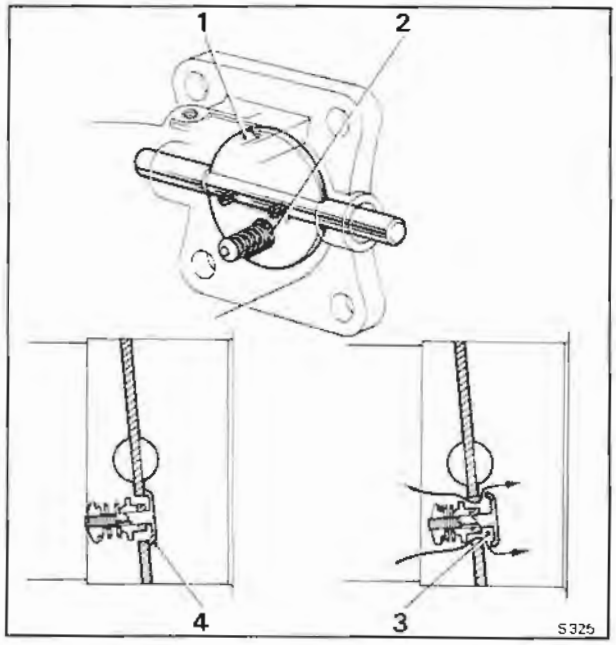

Fig. U25 Overrun valve
1 Throttle butterfly disc
2 Overrun valve
3 Overrun valve open
4 Overrun valve closed

Spring-loaded jet needle (see Fig. U26)

The jet needle fitted to each carburetter is biased towards a predetermined position in the jet orifice by means of a spring-loaded fixing.

The shoulder of the needle abuts a protrusion formed on the needle guide. Under the pressure of a spring the needle is held permanently in one position relative to the air flow. As the needle is retained in a predetermined position no jet centring is required and a non-centreable jet bearing is fitted. To ensure correct fitting,the needle guide carries an etched alignment mark which should be positioned mid-way between the two cut outs in the piston.

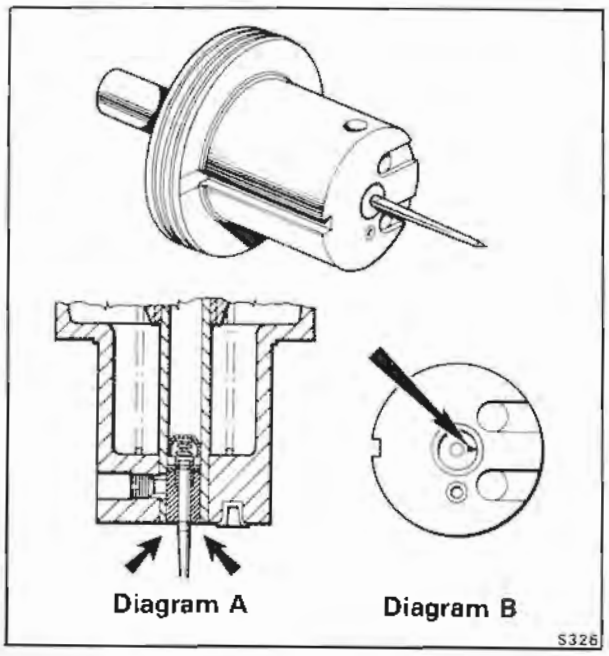

Fig. U26 Spring-loaded jet needle
Diagram A
Needle guide height setting
Diagram B
Needle guide alignment setting

Carburetter fuel filter

A filter element is fitted into the fuel filter housing attached to the side of each carburetter. At the intervals specified in the Service Schedules these two filter elements should be discarded and new ones fitted as described in Chapter K.

Carburetters and air horns assembly - To remove

Before commencing to remove the carburetters observe the following points.

1. When disconnecting the various hoses, pipes and wiring connections ensure that they are suitably labelled to assist identification when assembling.

Printed in England
© Rolls-Royce Motors Limited 1980

2. Ensure that **all** open ends of pipes, hoses, etc. are suitably blanked off to prevent the ingress of dirt, etc.
3. Ensure that the usual safety precautions are carried out (i.e. parking brake firmly applied, gear range selector lever in 'Park', battery disconnected, etc.).

To remove the carburetter and air horn assembly proceed as follows
From 'A' bank side
1. Remove the air intake elbow casting (refer to Air intake - To remove in Chapter K).
2. Disconnect the fuel feed and recirculation pipes adjacent to 'A' bank carburetter.
3. Withdraw the electrical connections from the speed control bellows assembly. Disconnect the chain link from the throttle linkage to the speed control unit. Withdraw the vacuum hose from the speed control unit. Unscrew and remove the 'steady' bolt from the speed control bracket.
4. Remove the split pin, washer and clevis pin from the throttle linkage just forward of 'A' bank carburetter.

From 'B' bank side
5. Disconnect the E.G.R. feed pipe upper joint (refer to E.G.R. feed pipe - To remove, Section U2).
6. Unscrew the union on the choke stove pipe at the bi-metal housing.
7. Unscrew the fuel feed pipe union at 'B' bank carburetter filter housing.
8. Remove the crankcase emission control system pipe from the choke butterfly housing; withdraw the housing from the end of the pipe.
9. Disconnect the electrical cables to the choke solenoid at the 'snap connector' joints, adjacent to the butterfly housing.
10. Disconnect the electrical connections to the anti'run-on'solenoid and the Weakening device and E.G.R. cut-off solenoid.
11. Detach the following hoses from the weakening device.
a. the hose from the float chamber vent valve
b. the hose from the fuel receiver
c. the hose to the air filter
d. the hose from the venturi chamber
These hoses are labelled A, H, G and D in Figure U4.
12. Disconnect the purge line at the restrictor.
13. Unscrew the 7/16 in. A/F nut from the dipstick bracket; collect the washer.
14. Unscrew the ½ in. A/F setscrew from the centre of the carburetter 'tee' piece; withdraw the setscrew and washer.
15. Carefully withdraw the carburetters and air horn assembly, ensuring that no pipes, hoses or electrical items are still connected.

Carburetters and air horns assembly - To fit
Fit the carburetters by reversing the procedure given for their removal, noting the following points.
1. Ensure that all joint faces are clean.
2. Fit new gaskets.

Carburetters - To remove
Remove the carburetters and air horn assembly from the car (refer to Carburetters and air horn assembly - To remove) and then, remove the carburetters from the air horns assembly as follows.

'A' bank carburetter
1. Unscrew the two ½in. A/F nuts securing the air horn to 'A' bank carburetter.
2. Withdraw the bolts, collect the washers and the full throttle stop bracket (if fitted).
3. Move the air horn flange upwards away from the carburetter.
4. Unscrew the union from the fuel filter.
5. Detach the vacuum supply hose from on top of the carburetter body adjacent to the carburetter and 'tee' piece flange.
6. Detach the hose from the side of the carburetter that connects to the fuel receiver in the weakening device.
7. Completely remove the two pinch bolts securing the throttle levers to the 'A' and 'B' bank carburetter butterfly spindles, remove the levers.
8. Unscrew the nut and withdraw the pinch bolt securing the fast-idle lever to the carburetter spindle; withdraw the lever.
9. Unscrew the four half-nuts that retain the carburetter to the 'tee' piece flange; collect the washers.
10. Withdraw the carburetter and collect the gasket.

'B' bank carburetter
1. With a screwdriver, unscrew and remove the two screws securing the solenoid platform in position adjacent to 'B' bank carburetter. One screw is located on the air horn and has a nut underneath, and the other screw is situated in the filter housing.
2. Unscrew the ½ in. A/F nuts from the bolts that retain the air horn to the carburetter flange; withdraw the bolts and collect the washers. Move the solenoid platform away from the carburetter.
3. Detach the hose from the side of the carburetter to the fuel receiver in the weakening device.
4. Carefully ease the air horn upwards away from the carburetter.
5. Completely remove the two pinch bolts securing the throttle levers to the 'A' and 'B' bank carburetter butterfly spindles,remove the levers.
6. Detach the vacuum supply hose from on top of the carburetter body adjacent to the carburetter and 'tee' piece flange.
7. Unscrew the remaining union from the fuel filter housing.
8. Unscrew the four half-nuts that retain the carburetter to the 'tee' piece flange; collect the

washers.

9. Withdraw the carburetter and collect the gasket.

Dismantling of the components within the carburetters is not recommended as all carburetters are set and balanced by accurate flow measuring techniques during manufacture.

In certain isolated instances however, it maybe necessary to dismantle the carburetters and under these conditions the following procedure should be carefully followed.

Carburetter - To dismantle Upper half (see Fig. U27)

1. Thoroughly clean the outside of the carburetter.

2. Unscrew the suction chamber retaining screws and remove the identity tag.

3. Lift the chamber assembly vertically from the body without tilting it.

4. Unscrew and remove the damper rod, taking care not to bend the rod as it is withdrawn.

5. Push the piston to its highest point in the suction chamber and carefully prise the circlip from around the top of the piston rod.

6. Withdraw the suction chamber from the piston in an upwards direction.

Remove the piston spring, and empty the oil from the piston rod.

7. Note the position of the needle guide etch mark in relation to the piston transfer holes for correct reassembly and unscrew the needle guide locking screw.

Withdraw the needle, guide and spring.

Lower half (see Fig. U28)

8. Mark the bottom cover-plate and body to ensure correct reassembly, unscrew the retaining screws and remove the cover complete with the sealing ring.

9. Remove the jet adjusting screw complete with 'O' ring.

10. Remove the jet adjusting lever retaining screw and spring.

11. Withdraw the jet complete with adjusting lever and disengage the lever.

12. Remove the float pivot spindle and aluminium washer.

13. Withdraw the float.

14. Remove the needle valve and unscrew the valve seat.

15. Unscrew the jet bearing locking nut and withdraw the bearing complete with fibre washer.

Throttle disc assembly (see Fig. U29)

16. Remove the throttle disc retaining screws.

17. Close the throttle and mark the position of the throttle disc in relation to the carburetter flange. **Do not mark the disc in the vicinity of the overrun** valve. Open the throttle and carefully withdraw the disc from the throttle spindle taking care not to damage the overrun the valve.

18. Withdraw the throttle spindle and remove the seals, noting the way it is fitted in relation to the carburetter body to ensure correct reassembly.

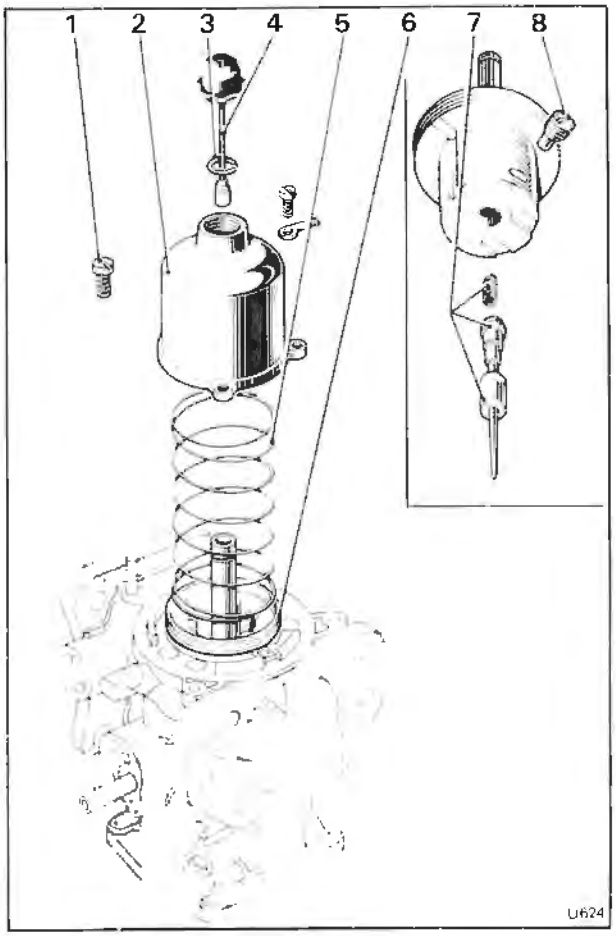

Fig. U27 Dismantling a carburetter (Upper half)

1 Suction chamber retaining screw
2 Suction chamber
3 Circlip
4 Damper rod
5 Spring
6 Piston
7 Spring-loaded needle assembly
8 Needle guide locking screw

Carburetter - To inspect

1. Examine the throttle spindle and its bearings in the carburetter body; check for excessive play and fit new parts if necessary.

2. Examine the float needle and seating for damage and excessive wear; fit new parts if necessary.

3. Examine all rubber seals and 'O' rings for damage or deterioration; fit new parts if necessary. **The cover-plate sealing ring must be renewed.**

4. Examine the carburetter body for cracks and damage and for security of the brass connections and the piston key.

5. Clean the inside of the suction chamber and piston rod guide with fuel or methylated spirit (denatured alcohol) and wipe dry. **Abrasives must not be used.**

Printed in England
© Rolls-Royce Motors Limited 1980

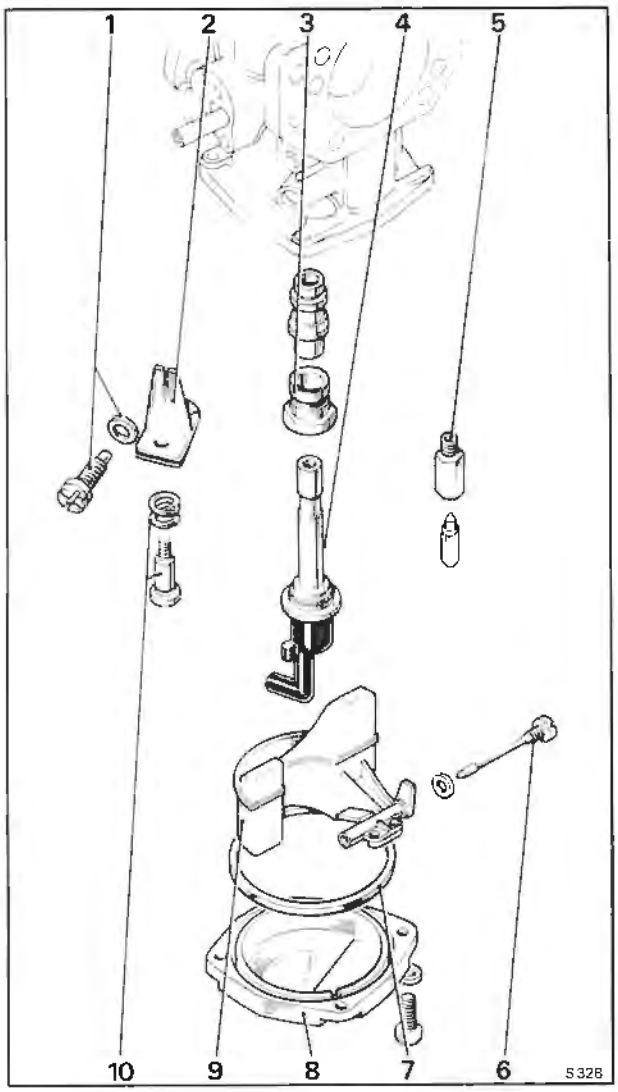

Fig. U28 Dismantling a carburetter (Lower half)

1 Jet adjusting screw and 'O' ring
2 Jet adjusting lever
3 Jet bearing assembly
4 Jet
5 Float chamber needle valve
6 Float pivot spindle
7 Sealing ring
8 Bottom cover-plate
9 Float
10 Jet lever adjusting screw

6. Examine the suction chamber and piston for damage and signs of scoring.
7. Check that all the balls are in the piston ball race (2 rows, 6 per row). Fit the piston into the suction chamber, without the damper and spring, hold the assembly in a horizontal position and spin the piston. The piston should spin freely in the suction chamber without any tendency to stick.

Carburetter - To assemble

Assemble the carburetter by reversing the

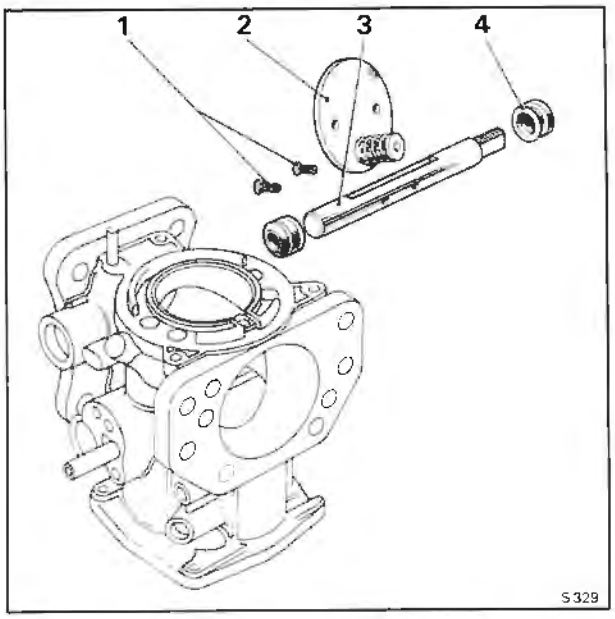

Fig. U29 Dismantling a carburetter (Throttle disc assembly)

1 Throttle disc retaining screws
2 Throttle disc assembly
3 Throttle spindle
4 Seal

procedure given for removal, noting the following points.

1. Ensure that the throttle disc is fitted in its original position.
2. New throttle disc retaining screws must be used when refitting the disc. Ensure that the throttle disc is correctly positioned and closes correctly before tightening the retaining screws. Spread the split ends of the screws sufficiently to prevent turning.
3. Position the throttle spindle end seals just below the spindle housing flange.
4. When fitting the jet assembly to the adjusting lever ensure that the jet head moves freely in the bi-metal cut out.
5. Fit a new float pivot spindle sealing washer or anneal the existing washer.

Check the level of the float in the float chamber (refer to Carburetter float level - To set).

6. Check that the small diameter of the jet adjusting screw engages the slot in the adjusting lever and set the jet 3,05 mm. (0.12 in.) below the bridge of the body.
7. Ensure that the needle guide etch mark aligns correctly with the piston transfer holes. After fitting the needle assembly, check that the shoulder of the guide aligns with the face of the piston (see Fig. U26).
8. To prevent the piston spring from being 'wound up' during reassembly, temporarily fit the piston and suction chamber, less the piston spring,

to the body and pencil mark their relative positions to each other.
9. Fit the spring to the piston, hold the suction chamber above the piston, align the pencil marks and lower the chamber over the spring and piston.
10. Fit the three retaining screws, together with the identity tag.
11. Push the piston to its highest point in the chamber, so that the piston rod protrudes out of the suction chamber neck.
12. Fit the circlip to the piston rod (see Fig. U30).
13. Fit the damper rod, noting that the damper should be filled with engine oil when the carburetter is fitted to an engine (see Carburetter air valve damper - To top-up).

Carburetter float level - To set
1. Remove the carburetter from the engine.
2. Invert the carburetter.
3. Mark the bottom cover-plate and carburetter to ensure correct assembly, unscrew the retaining screws and remove the cover complete with the sealing ring.

A new rubber sealing ring must be installed when fitting the cover-plate.

4. Ensure that the float chamber needle valve is held in the closed position by the weight of the float only.
5. Check that the lowest point on the float (see Fig. U31) is either level with the float chamber face, or up to 1,52 mm. (0.060 in.) below.
6. If necessary, adjust the float position by carefully bending the brass pad.
7. Check that the float pivots correctly about the spindle.

Carburetter air valve damper - To top-up
The upper portion of the piston rod (guide spindle), attached to the air valve piston in each carburetter, is hollow and is filled with the same type of oil as used in the engine.

At the service intervals specified in the Service Schedules the damper oil level should be checked and topped-up if necessary.
1. Unscrew and remove the cap and damper assembly from the air valve damper.
2. Top-up the damper reservoir in the air valve with clean engine oil to approximately 13 mm. (0.50 in.) from the top of the tube. Fit the damper into the tube and screw the cap firmly into position.

Carburetter throttle linkage - To fit and set left-hand drive cars (see Fig. U32)
1. Assemble 'A' bank and 'B' bank throttle levers (items 7 and 11) onto the carburetter spindles.
2. Fit the setting jig (RH 8880) into position on the throttle levers.
3. Fully close 'B' bank carburetter butterfly (item 8).
4. Tighten the pinch bolt securing 'B' bank throttle lever.

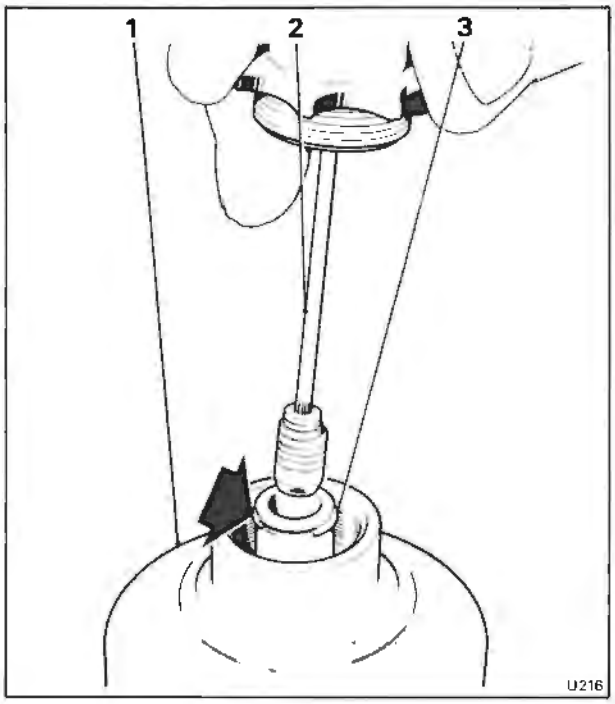

Fig. U30 Carburetter damper assembly
1 Suction chamber
2 Damper rod
3 Circlip

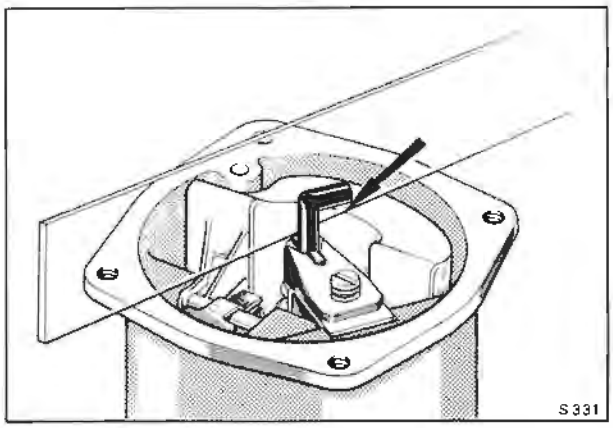

Fig. U31 Checking the float level

5. Fully close 'A' bank carburetter butterfly (item 2).
6. Tighten the pinch bolt securing 'A' bank throttle lever.
7. Fit the throttle spring (item 5) to the throttle levers.
8. Remove the setting jig from the throttle levers.
9. Fit the cross link guide bracket (item 10) to the carburetter 'tee' piece (item 6). Secure in position with two small screws which should be 'locked' using two tabs washers.

Printed in England
© Rolls-Royce Motors Limited 1980

10. Fit the cross link (item 9) and the eccentric throttle adjuster (item 4) onto the throttle levers, ensuring that both throttle butterflies are closed when adjusting and tightening the eccentric adjuster.

Note

The eccentric pin should be set in the lowest position.

11. Ensure that the cross link guide (item 10) has a clearance of between 1,27 mm. (0.050 in.) and 1,78 mm. (0.070 in.) with the cross link. If necessary bend the guide to give these clearances.

12. Check that the throttle linkage moves freely.

13. Fit the idle stop screw (item 3) and lock-nut; adjust until the screw just contacts the stop bracket with the throttle butterflies remaining in the closed throttle position.

14. Screw down the idle stop screw ½ turn.

15. Connect one end of the drive link (item 1) to the 'B' bank throttle lever and the other end, to the manifold shaft lever (item 13).

16. Operate the linkage to ensure free movement.

17. With the throttles in the closed position check that the relationship between the 'A' bank control shaft to control rod lever (item 12) on the rear of the manifold shaft and the front manifold shaft lever (item 13) is as illustrated in Figure U32. Tighten the securing bolts on both levers.

18. Operate the mechanism; check for freedom of movement within the linkage and also clearance with the various engine components.

19. To set the remainder of the linkage from the control rod lever on the rear of the manifold shaft to the accelerator pedal refer to Chapter K - Fuel system.

Carburetter throttle linkage - To fit and set right-hand drive cars (see Fig. U33)

1. Assemble 'A' bank and 'B' bank throttle levers (items 6 and 11) onto the carburetter spindles.

2. Fit the setting jig (RH 8880) into position on the throttle levers.

3. Fully close 'B' bank carburetter butterfly (item 7).

4. Tighten the pinch bolt securing 'B' bank throttle lever.

5. Fully close 'A' bank carburetter butterfly (item 2).

6. Tighten the pinch bolt securing 'A' bank throttle lever.

7. Fit the throttle spring (item 3) to the throttle levers.

8. Remove the setting jig from the throttle levers.

9. Fit the cross link guide bracket (item 9) to the carburetter 'tee' piece (item 5). Secure in position with two small screws which should be 'locked' using two tabs washers.

10. Fit the cross link (item 10) and the eccentric throttle adjuster (item 4) onto the throttle levers, ensuring that both throttle butterflies are closed when adjusting and tightening the eccentric. adjuster.

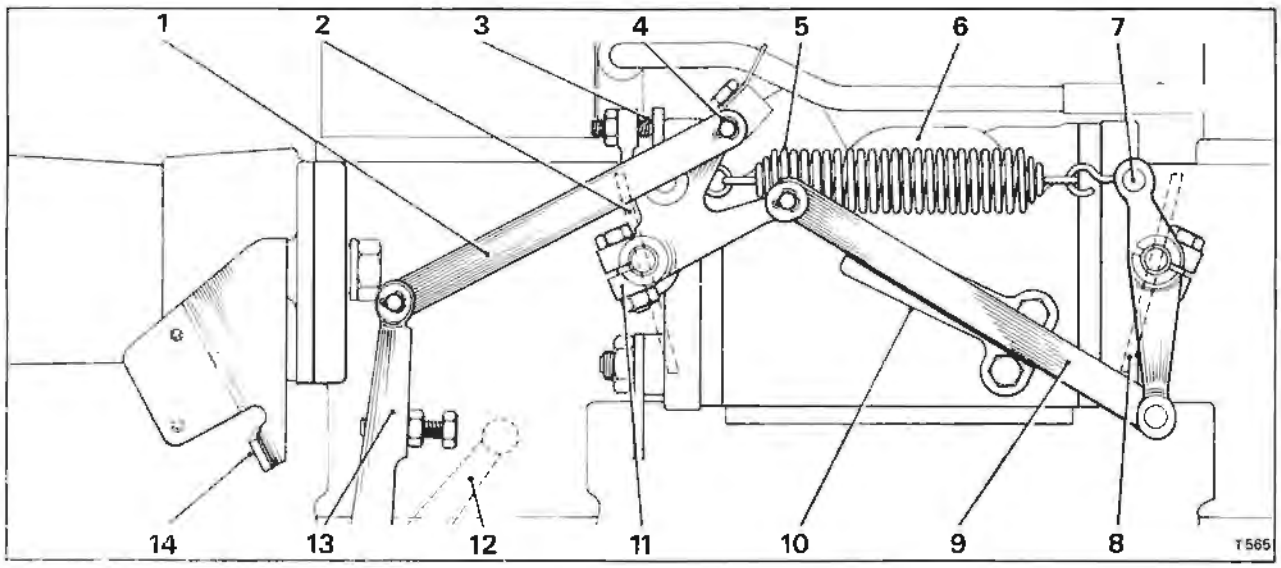

Fig. U32 Carburetter throttle linkage - left-hand drive cars

1 Drive link
2 'A' bank carburetter throttle butterfly
3 Idle stop screw
4 Eccentric throttle adjuster
5 Throttle spring
6 Carburetter 'tee' piece
7 'B' bank carburetter throttle lever
8 'B' bank carburetter throttle butterfly
9 Cross link
10 Throttle cross link guide bracket
11 'A' bank carburetter throttle lever
12 Rear manifold shaft lever
13 Front manifold shaft lever
14 Full throttle stop

Note
The eccentric pin should be set in the lowest position.

11. Ensure that the cross link guide (item 9) has a clearance of between 1,27 mm. (0.050 in.) and 1,78 mm. (0.070 in.) with the cross link. If necessary bend the guide to give these clearances.

12. Check that the throttle linkage moves freely.

13. Fit the idle stop screw (item 8) and lock plate; adjust until the screw just contacts the stop bracket (item 9) with the throttle butterflies remaining in the closed throttle position.

14. Screw down the idle stop screw ½ turn.

15. Connect one end of the drive link (item 12) to the 'B' bank throttle lever and the other end, to the manifold shaft lever (item 13).

16. Operate the linkage to ensure free movement.

17. With the throttles in the closed position check that the 'A' bank control shaft to control rod lever (item 14) on the rear of the manifold shaft is in line with the front manifold shaft lever (item 13). Tighten the securing bolts on both levers.

18. Operate the mechanism; check for freedom of movement within the linkage and also clearance with the various engine components.

19. To set the remainder of the linkage from the control rod lever on the rear of the manifold shaft to the accelerator pedal refer to Chapter K - Fuel system.

Carburetters - To set

The carburetters fitted to these cars are adjusted at the factory using special equipment to ensure that their settings comply with the current emission control regulations.

Under normal circumstances the carburetters should not require adjustment in service.

If however, adjustment is found necessary due to inadvertent disturbance or replacement of a component set the carburetters by carrying out the following operations in the sequence given.

a. Set throttle linkage and temporarily set engine idle speed. Check linkage clearances.

b. Set cold start fast-idle cam.

c. Tune carburetters.

d. Set cold start fast-idle speed.

e. Set the kickdown and E.G.R. cut-out micro-switch.

f. Set full throttle stop (if fitted).

Carburetter tuning

Preliminary checks

Before tuning the carburetters the following checks should be carried out.

Ensure that the vehicle is in 'Park', the parking brake firmly applied and that the gear range

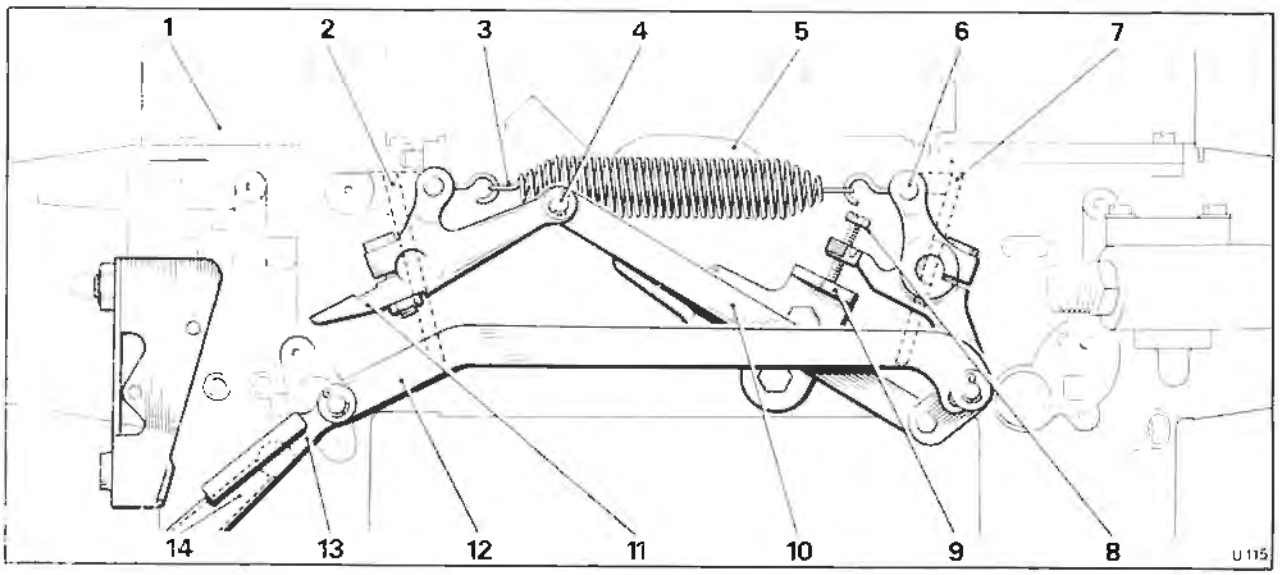

Fig. U33 Carburetter throttle linkage - right-hand drive cars

1 'A' bank carburetter
2 'A' bank carburetter throttle butterfly
3 Throttle spring
4 Eccentric throttle adjuster
5 Carburetter 'tee' piece
6 'B' bank carburetter throttla lever
7 'B' bank carburetter throttle butterfly
8 Idle stop screw
9 Throttle cross link guide bracket
10 Cross link
11 'A' bank carburetter throttle lever
12 Drive link
13 Front manifold shaft lever
14 Rear manifold shaft lever

Printed in England
© Rolls-Royce Motors Limited 1980

actuator thermal cut-out has been removed from the main fusebox.

1. Check the condition of the sparking plugs.
2. Check the ignition timing.
3. Check the flow through the choke stove pipe.
4. Check the entire induction system for air leaks.
5. Check the purge line flow rate.
6. Ensure that the air conditioning system is switched off.
7. Start the engine and warm up; allow to run for at least 5 minutes after the thermostat has opened.
8. Stop the engine, ensure that the choke butterfly valve is fully open and the choke fast-idle off.
9. Connect an electric impulse tachometer in accordance with manufacturer's instructions.
10. Check the float chamber depression.
11. Check the exhaust gas recirculation system for correct operation.
12. Check and set the full throttle exhaust gas recirculation cut-out micro-switch situated under the accelerator pedal.

Carburetter idle air balance

1. Ensure that the usual safety precautions are carried out (i.e. parking brake firmly applied, gear range selector lever in Park, etc.) and connect an impulse tachometer in accordance with the manufacturer's instructions.
2. Disconnect the speed control chain.
3. Start and run the engine until normal operating temperature is attained.
4. Stop the engine.
5. Fit the dial gauges RH 8841 with RH 9105 (kit to convert dial gauges to fit the HIF7 carburetters) to the carburetter dashpots in place of the dampers.

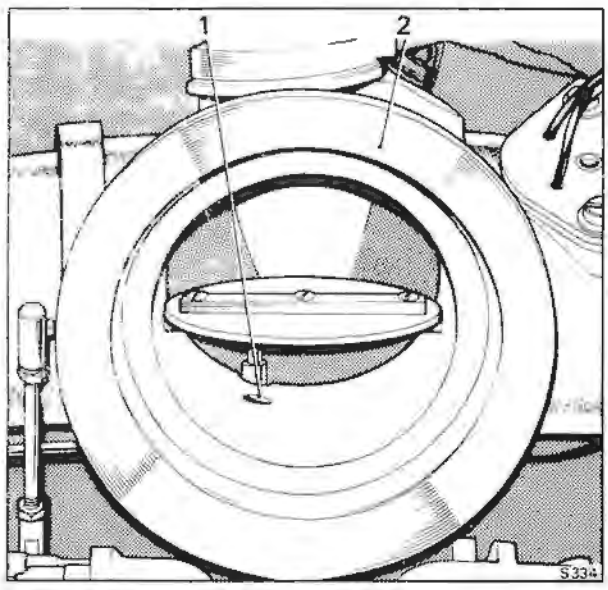

Fig. U34 Hot idle mixture compensator feed
1 Hot idle compensator feed
2 Air intake butterfly housing

6. Zero the gauges with the engine stopped and lightly tighten the gauge clamp screws.
7. Start and run the engine at the idle speed setting (650 r.p.m.); adjust the carburetter piston lifts to be equal (without 10%) using the eccentric adjuster (see Figs. U32 and U33).
8. The average piston lift reading should now be between 2,03 mm. and 2,54 mm. (0.080 in. and 0.100 in.).

If the idle speed piston lift is over 2,54 mm. (0.100 in.) check the ignition timing at idle as this condition may result in unsatisfactory driveability.

9. Stop the engine and remove the impulse tachometer.
10. Remove the dial gauges and fit the carburetter dampers.
11. Connect the speed control chain and adjust to give a minimum slack condition, consistent with no impediment to the throttle lever to return to the idle speed position.

Carburetter mixture strength - To set

1. Ensure that the usual safety precautions are carried out (i.e. parking brake firmly applied, gear range selector lever in Park, etc.) and connect an impulse tachometer in accordance with the manufacturer's instructions.
2. Remove the air intake, blank off the hot idle compensator feed drilling (see Fig. U34) and replace the intake.
3. Remove the air inlet hose from the air injection system pressure relief valve and fit a blank over the valve (a suitable blank may be produced from a short length of rubber hose with one end plugged).

Note

The air injection system is inoperative when the relief valve inlet air hose is disconnected from the air pump. The valve must be blanked to prevent air being drawn into the exhaust port by pulsations in the exhaust system since this would affect the idle CO reading.

4. Disconnect the E.G.R. valve signal pipe at the cut-off solenoid 'Y' piece, blank off the open 'Y' piece hose connection.
5. Unscrew and remove the pressure tapping cap from the weakening device.
6. Ensure that the engine has run for at least 25 minutes after the thermostat has opened.
7. Purge the engine at 2 000 r.p.m. in 'Neutral' for ¼ minute. Allow the engine speed to return to the idle setting and ensure that this is 650 r.p.m.; adjust if necessary using the idle stop screw.
8. Insert the probe of a CO meter into either exhaust system tailpipe and check the reading.
9. The CO meter reading should be 1% to 4%. If the reading is outside the limits quoted
a. Check for induction system leaks (if below 1%)
b. Check the choke stove and purge line flow rates.

10. If after carrying out Operation 8 the idle speed CO meter reading is still outside the limits quoted, the carburetter mixture screws (see Fig. U24) may be adjusted by equal amounts up to ½ turn in the same direction in order to achieve the mean limit of 2.5%. No attempt should be made to adjust the CO reading if it is in the region of 2.5% to 4.0%.

Note

a. Clockwise rotation of the mixture screws will richen the mixture.

b. The tuning operations should be carried out in the shortest possible time. If the time exceeds 3 minutes, run the engine at 2 000 r.p.m. in 'Neutral' for ¼ minute and then resume the tuning operations. Repeat this purging operation if a further period of 3 minutes is exceeded.

After purging the system gently tap around the neck of the carburetter suction chamber with a lightweight non-metallic object (i.e. the wooden handle of a small screwdriver), to eliminate carburetter piston hysteresis. The engine is to be run on Indolene Clear (HO) reference fuel or equivalent (Unleaded gasoline only).

11. Stop the engine.

12. Fit the pressure tapping cap to the weakening device, fit a new sealing washer if necessary.

13. Remove the blank from the air pressure relief valve and connect the feed hose from the air pump to the relief valve.

14. Remove the blank from the cut-off solenoid 'Y' piece hose connection and connect the E.G.R. signal pipe to the solenoid connection.

15. Start the engine and check the idle speed, this should be 650 r.p.m.; adjust by means of the idle stop screw (refer to Section U6).

16. Stop the engine, remove the air intake and discard the blank from the hot idle compensator feed drilling; fit the air intake.

17. Remove the impulse tachometer.

Temperature controlled air intake

To ensure rapid warm-up and improve control of the air/fuel ratio a temperature controlled air intake is fitted (see Fig. U35).

A vacuum operated blending valve attached to the air cleaner assembly is controlled by a thermal sensor in the air intake elbow. This valve blends hot air from a pick-up point (scoop) adjacent to the exhaust manifold with cold air from under the front wing; thus maintaining a constant temperature of the intake air as it enters the carburetters.

All other details for the Temperature Controlled Air Intake System are given in Chapter K except for the checking procedure which is as follows.

Temperature controlled air intake - To check

1. Disconnect the air intake hose at the intake elbow and check that the correct temperature sensor is fitted, this should have a yellow spot on the top face.

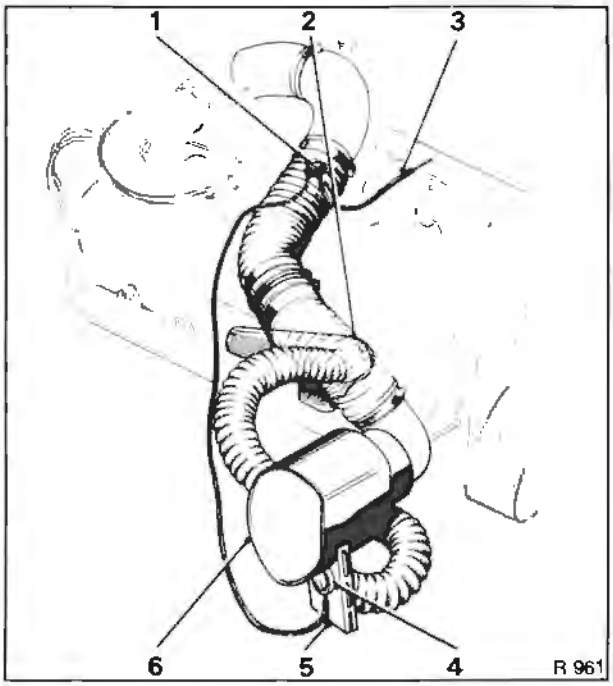

Fig. U35 Temperature controlled air intake

1 Temperature sensor
2 Hot air scoop
3 Manifold vacuum hose
4 Air blend valve
5 Cold air intake
6 Air cleaner/silencer

2. Disconnect both vacuum hoses of the temperature sensor.

3. Place the open ends of both hoses together and check that there is no obvious air leak. Detach the open ends of the hoses from each other (i.e. release the vacuum sharply) and listen for the vacuum motor within the wing to 'click' open.

4. Reconnect the hoses.

Note

If there is an air leak or the operation of the temperature controlled air intake is suspect, remove the right-hand front underwing sheet and check the hose connection to the vacuum motor; also observe the operation of the temperature flap.

Printed in England
© Rolls-Royce Motors Limited 1980
April 1980
TSD 4200
(Japan
1980 Model year)

Section U6

Ignition System

Data

Ignition timing	9° B.T.D.C. (Initial static setting) 15° B.T.D.C. at 1 200 r.p.m. 7° - 13° B.T.D.C. at idle speed (650 r.p.m.) (Approach 1 200 r.p.m. from a higher speed).

Ignition control system

The ignition system utilises an Opus distributor (in which an oscillator pick-up and control unit replace the conventional contact breaker), a high load ignition coil and a ballast resistor. The control unit comprises an electronic oscillator, amplifier and power transistor.

A drum with eight ferrite rods (one per cylinder) moulded into the outer edge is mounted onto the distributor drive-shaft. As the drum rotates a voltage is created each time a ferrite rod passes the oscillator pick-up, this signal is then amplified and used to switch-off the normally conducting power transistor in the primary coil circuit,thus inducing a high voltage in the secondary winding which is distributed to the sparking plugs in the normal manner.

The distributor has a conventional centrifugal advance mechanism.

The Opus distributor provides increased accuracy of timing and increased service life before maintenance is required.

For the removal and fitting instructions of the ignition system components refer to Chapter M.

Ignition - To time (using a stroboscope)

The ignition is timed on A1 cylinder which is located at the front left-hand side of the engine (viewed from the front of the car).

Note

If the ignition timing is to be set, ensure that the sparking plugs are in good condition before running the engine; if they require cleaning or renewal the sparking plugs gap should be set to 0,9 mm. (0.035 in.).

1. To check the ignition timing commence by running the engine until normal operating temperature is attained and the choke fast-idle is in the off position. Switch off the engine.
2. Connect a stroboscope and a tachometer to the engine as described in the instructions supplied with the respective equipment.
3. Start the engine and adjust the throttle stop screw to give an idle speed of 1 200 r.p.m. When setting the engine idle speed reduce from a higher speed to 1 200 r.p.m.
4. Direct the flashing light of the stroboscope onto the crankshaft damper timing marks and timing pointer; the pointer is positioned on the right-hand side of the crankshaft damper when viewed from the front of the engine.
5. If the timing pointer does not coincide with the 15° B.T.D.C. mark on the crankshaft damper adjust the ignition timing as follows.
6. Release the clamp screw on the distributor and rotate the head of the distributor in the appropriate direction until the correct timing is obtained. Clockwise rotation of the distributor head advances the ignition and conversely anti-clockwise rotation retards the ignition. After adjustment has been carried out tighten the clamp screw and again check to ensure that the timing has not altered whilst tightening the clamp screw.
7. Set the engine idle speed to 650 r.p.m.
8. Direct the flashing light of the stroboscope onto the crankshaft damper timing marks and timing pointer. Check that the ignition timing is approximately 7° - 13° B.T.D.C.
9. Stop the engine and remove all the test equipment.

Setting the engine idle speed

Ensure that the engine is at normal operating temperature and that the choke fast-idle is in the off position.

The air conditioning system must be switched off and a tachometer connected to the engine in accordance with the manufacturer's instructions.

1. Stop the engine, remove the air intake and blank off the hot idle compensator feed drilling (see Fig. U34); replace the air intake.
2. Start the engine and, if necessary, adjust the engine idle speed to 650 r.p.m. using the throttle stop screw.
3. Stop the engine and remove the air intake. Remove the blank from the hot idle compensator feed drilling and fit the air intake. Detach the tachometer and stroboscopic timing equipment.

Distributor maintenance

The distributor requires no routine maintenance except that, at the mileage intervals specified in the Service Schedules, the moulded cover and H.T. rotor arm should be removed and the spindle shaft bearings lubricated by inserting a few drops of

Printed in England
© Rolls-Royce Motors Limited 1980
April 1980
TSD 4200
(Japan
1980 Model year)

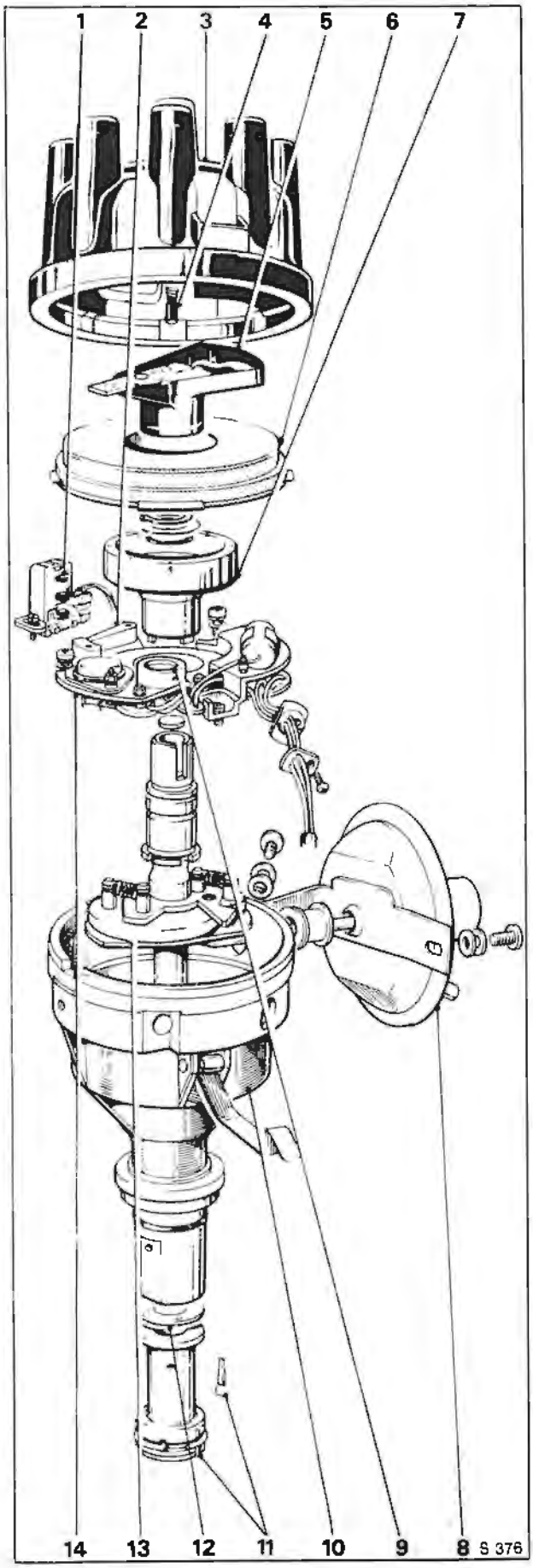

engine oil onto the felt pad. The automatic advance mechanism should also be lubricated at this time with a few drops of engine oil inserted through apertures in the base plate.

Sparking plugs

The sparking plugs approved for this car are Champion RN 14Y. Before fitting the plugs, set the gaps with the aid of a feeler gauge to 0,9 mm. (0.035 in.) and lightly smear the threads with 'Graphogen' grease.

Fig. U36 Ignition distributor

1 Pick-up module
2 Pick-up arm
3 Distributor cover (cap)
4 High tension brush and spring
5 Rotor arm
6 Flash over shield (dust cover)
7 Timing rotor
8 Vacuum advance unit
9 Control unit
10 Distributor body
11 Driving dog and pin
12 Thrust washer
13 Automatic advance mechanism
14 Electronic module assembly

Section U7

Electrical components

Printed in England

© Rolls-Royce Motors Limited 1980

The electrical components described in this section would normally appear in Chapter M - Electrical system, however, as they are used in connection with the emission control system it is thought more practical to include the information in this Chapter.

The components concerned are as follows.

E.G.R. system and Weakening system cut-out switch
Anti 'run-on' solenoid
E.G.R. system and Weakening system cut-off solenoid
Kickdown and Full throttle E.G.R. cut-out micro-switch
Catalytic converter overheat warning system

E.G.R. system and Weakening system cut-out switch

The bi-metal cut-out switch is situated in the side of the air intake elbow adjacent to the choke stove take-off pipe and 'B' bank carburetter (see Fig. U37).

E.G.R. system and Weakening system cut-out switch - To remove

1. Withdraw the protective sheath and detach the electrical connections, noting the position of the connections to assist identification on assembly.
2. Unscrew and remove the three setscrews and spring washers.
3. Withdraw the cut-out switch.

E.G.R. system and Weakening system cut-out switch - To fit

Fit the cut-out switch by reversing the procedure given for removal.

1. Ensure that the gasket is in a good condition.
2. The setscrews must be fitted with spring washers.
3. The protective sheath must be fitted over the electrical connections.

E.G.R. system and Weakening system cut-out switch circuit wiring - To check

1. Detach the electrical connection from the E.G.R. and Weakening systems cut-out switch.
2. Attach one side of a test lamp to the White cable in the connection block and the other side to a good earth.
3. Switch on the ignition noting that the test lamp bulb illuminates.
4. Switch off the ignition noting that the test lamp bulb extinguishes.

E.G.R. system and Weakening system cut-out switch - To check

1. Withdraw the protective sheath from the electrical connections.
2. Do not disturb any wiring but connect both electrical connections via a test lamp.
3. Ensure that the engine is cold [i.e. intake air temperature below approximately 14° C. (57° F.)] and switch on the ignition.
4. Check that the test lamp bulb is illuminated.
5. Start and run the engine; as the engine warms-up [i.e. the inlet air temperature exceeds approximately 14° C. (57° F.)] the test lamp bulb should extinguish.

Anti 'run-on' solenoid

The anti 'run-on' solenoid is situated on a platform adjacent to 'B' bank carburetter; it is the foremost of the two solenoids fitted on the platform.

The use of low octane fuel often causes an engine to 'diesel' (i.e. to continue to run-on after the ignition has been switch off, particularly when the engine is hot). To prevent this an anti 'run-on' solenoid is fitted between the fuel receiver and the induction manifold (see Figs. U4 and U37). When the ignition is switched off the solenoid valve opens and connects the weakening system to the induction manifold, thus creating a high depression in the float chambers which cuts off the fuel supply.

Anti 'run-on' solenoid - To remove

1. Disconnect the rubber hose from either side of the solenoid.
2. Disconnect the two electrical leads at their solenoid connections.
3. Unscrew and remove the two screws situated one on either side of the solenoid body.
4. Withdraw the anti 'run-on' solenoid.

Anti 'run-on' solenoid - To fit

Fit the anti 'run-on' solenoid by reversing the procedure given for removal.

Anti 'run-on' solenoid circuit wiring - To check

1. Connect a test lamp across the two electrical connections to the solenoid. **Do not disconnect the two connections.**

July 1980

TSD 4200
(Japan
1980 Model year)

2. Switch on the ignition and check that the test lamp bulb illuminates.
3. Switch off the ignition and check that the test lamp bulb is extinguished.

Anti 'run-on' solenoid - To check
1. Ensure that the usual safety precautions are carried out (i.e. parking brake firmly applied, gear range selector lever in 'Park', etc.).
2. Connect an impulse tachometer in accordance with the manufacturer's instructions.
3. Detach the weakening device pressure tapping cap (see Fig. U18) and connect a manometer capable of reading 0 to 15,24 cm. (0 to 6 in.) of water to the tapping.
4. Disconnect the carburetter vacuum signal to the E.G.R. valves at the cut-off solenoid end of the hose. Blank off the signal hose.

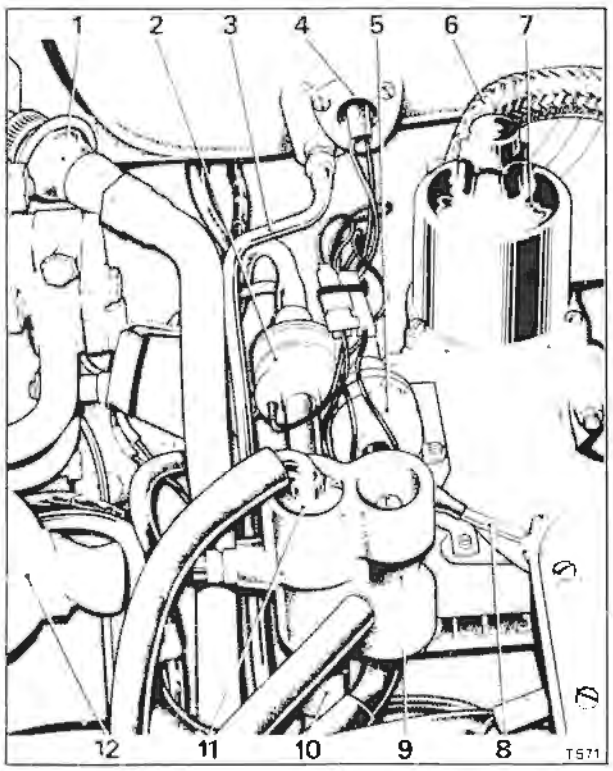

Fig. U37 Solenoid platform
1 Check valve
2 Anti 'run-on' solenoid
3 Choke stove pipe
4 E.G.R. system and Weakening system cut-out switch
5 E.G.R. system and Weakening system cut-off solenoid
6 Exhaust gas distribution pipe
7 'B' bank carburetter
8 E.G.R. signal hose
9 Mixture weakening device
10 Fuel receiver
11 Float chamber vent valve
12 Engine oil filler cap

5. Start and run the engine at the idle speed setting (650 r.p.m.).
6. Switch off the engine and observe the reading on the manometer. The reading should momentarily increase to approximately 15,24 cm. (6.0 in.) as the engine stops.
7. If the reading does not increase, the operation of the anti 'run-on' solenoid is incorrect.

This could be caused by the following.
a. A blockage in the hose (see Fig. U18) from the anti 'run-on' solenoid to the weakening device.
b. A blockage in the hose (see Fig. U18) from the anti 'run-on' solenoid to the vacuum manifold or in the vacuum manifold.
c. Incorrect wiring to the anti 'run-on' solenoid.
d. Faulty anti 'run-on' solenoid.

E.G.R. system and Weakening system cut-off solenoid

The E.G.R. system and weakening system cut-off solenoid is the rearmost of the two solenoids mounted on the platform adjacent to 'B' bank carburetter (see Figs. U4 and U37).

E.G.R. system and Weakening system cut-off solenoid - To remove
1. Detach the electrical connections, noting the position of the connections to assist identification when assembling.
2. Detach the rubber hose from either side of the solenoid.
3. Unscrew the two 'cheese-headed' mounting screws and withdraw the solenoid.

E.G.R. system and Weakening system cut-off solenoid - To fit
Fit the cut-off solenoid by reversing the procedure given for removal.

E.G.R. system and Weakening system cut-off solenoid circuit wiring - To check
1. Connect a test lamp across the two electrical connections to the solenoid. **Do not disconnect the two connections.**
2. Ensure the engine is cold.
3. Switch on the ignition and start the engine noting that the bulb of the test lamp is illuminated.
4. Run the engine; noting that as the engine warms-up [the inlet air temperature reaches approximately 14° C. (57° F.)] the test lamp bulb should extinguish.
5. Stop the engine and allow to cool, noting that when the engine becomes cold [the air in the intake drops to a temperature of approximately 12° C. (54° F.)] the test lamp bulb again illuminates.

E.G.R. system and Weakening system cut-off solenoid - To check
1. Detach the carburetter vacuum signal to weakening system cut-off solenoid hose at the solenoid and blank off the hose.

Connect a suitable length of hose to the solenoid connection.
2. Clean the open end of the additional hose.
3. Switch on the ignition.
4. Place the hose in the mouth and apply pressure.
5. If the operation of the solenoid is correct note that the following conditions apply.
a. With a cold engine [i.e. the inlet air temperature below approximately 14° C. (57° F.)] blowing air through the hose **should not** be possible.
b. As the engine warms-up [i.e. an inlet air temperature of approximately 14° C. (57° F.) or above] blowing air through the hose should be possible.
c. As the engine again cools [i.e. the inlet air temperature drops below approximately 12° C. (54° F.)] the conditions described in (a) should again apply.

Kickdown and Full throttle E.G.R. cut-out micro-switch

This micro-switch is situated on the underside of the car body below the accelerator pedal, it is a dual purpose micro-switch providing kickdown (detent) for the torque converter transmission and cut-out for the E.G.R. system.

Kickdown and Full throttle E.G.R. cut-out micro-switch - To remove
1. Drive the car onto a ramp and raise to a suitable working height.
2. From inside the car, locate the micro-switch operating plunger beneath the accelerator pedal.
3. Unscrew the large retaining nut and withdraw the washer.
4. From under the car detach the electrical connections and withdraw the micro-switch assembly.

Kickdown and Full throttle E.G.R. cut-out micro-switch - To dismantle
The assembly comprises the micro-switch, plunger and casing, the assembly should be removed from the car before any dismantling is commenced.
1. Using a screwdriver carefully 'ease back' the indentations which crimp around the cover of the assembly.
2. Remove the cover.
3. Disconnect the two electrical cables from the micro-switch. The White/Green cable has a 'Lucar' connection and the White cable is retained by a small cheesehead screw.
4. Unscrew the two 6 B.A. nuts securing the micro-switch to its mounting bracket. Withdraw the cheesehead screws and collect the two washers from each screw. Withdraw the micro-switch.
5. Unscrew the two cheesehead screws retaining the micro-switch mounting bracket. Withdraw the bracket.
6. Remove the circlip from around the plunger assembly.
7. Withdraw the plunger assembly and spring.

Kickdown and Full throttle E.G.R. cut-out micro-switch - To assemble
Assemble the micro-switch and plunger by reversing the procedure given for dismantling, noting the following points.
1. Ensure that the rubber seal is in a good condition and fitted securely to the body of the assembly. The seal is secured using Dunlop Adhesive S1240 or equivalent.

Kickdown and Full throttle E.G.R. cut-out micro switch - To set
1. Ensure that the carburetter linkage (refer to Section U5) and the accelerator pedal linkage (refer to Section K7) are correctly set. Swing the micro-switch towards the base of the plunger until a 0,254 mm. to 0,762 mm. (0.010 in. to 0.030 in.) gap exists between the micro-switch button and the plunger.
2. Tighten the micro-switch securing nuts and afterwards, check that the gap set in Operation 1 has not been disturbed.
3. Slowly depress the plunger to obtain full stroke. Check that the switch operates (audible click) during this operation.
4. Ensure that with the main plunger fully depressed it is still clear of the micro-switch case (see Fig. U38).

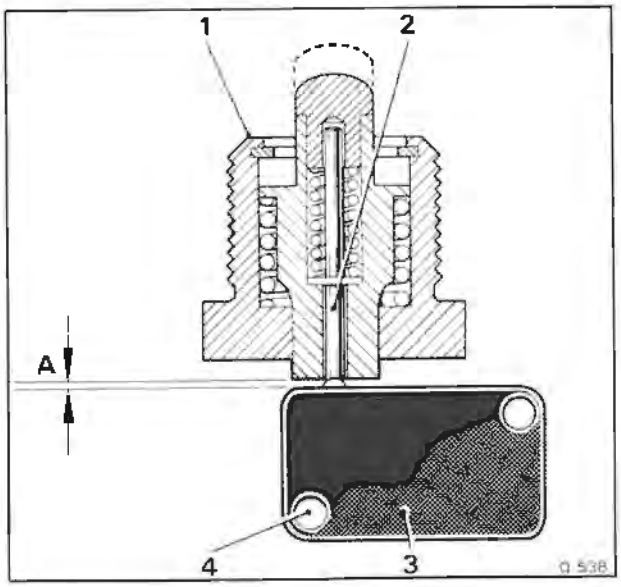

Fig. U38 Kickdown and Full throttle E.G.R. cut-out micro-switch assembly
1 Plunger assembly
2 Secondary plunger
3 Micro-switch
4 Elongated hole in mounting plate (micro-switch adjustment)

A Clearance of 0,127 mm. (0.005 in.)

Printed in England
© Rolls-Royce Motors Limited 1980
April 1980
TSD 4200
(Japan
1980 Model year)

5. Slowly release the plunger ensuring that the micro-switch contacts open (audible click).
6. Ensure that the clearance set between the plunger and the micro-switch button, remains as set in Operation 1.

Kickdown and Full throttle E.G.R. cut-out micro-switch - To check
To check the circuit wiring and micro-switch operation for full throttle E.G.R. cut-off proceed as follows.
1. Carry out Operations 1 to 4 inclusive under the heading 'E.G.R. system and Weakening system solenoid circuit wiring - To check'.
2. Stop the engine and depress the accelerator to activate the micro-switch.
3. Ensure that the test lamp bulb is illuminated whilst the full throttle position is maintained with the accelerator pedal.

Catalytic converter overheat warning system
To satisfy Japanese regulations a warning system is fitted to the exhaust catalytic converters to alert the driver if temperatures in these two areas become excessive.

The sensors are shown in Figure U39.

The warning system utilises a catalyst control unit (mounted under the front left-hand wing above the under wing sheet) and warning lamp situated on the facia.

If the temperature of either of the catalytic converters becomes excessive the warning lamp will illuminate.

Overheat warning lamp
To check that the warning lamp bulb is operating satisfactorily, ensure that the red coloured warning lamp situated between the four-in-one instrument gauge and speedometer, directly below the main beam warning lamp, illuminates just prior to the engine starting but is extinguished immediately the engine starts.

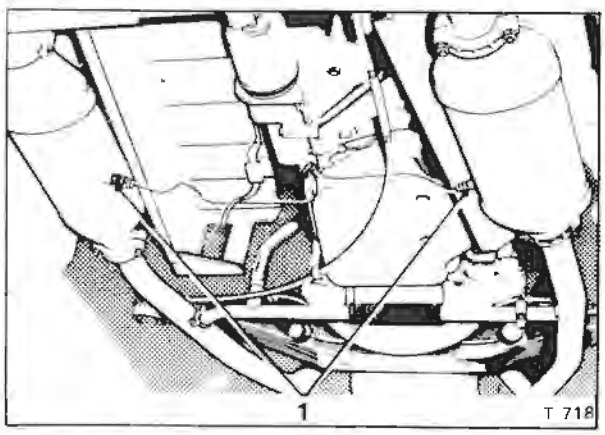

Fig. U39 Exhaust overheat sensors
1 Catalytic converters

Overheat warning
Should an exhaust overheat condition be signalled the speed of the vehicle must be reduced to 50 k.p.h. (30 m.p.h.) immediately and this speed must not be exceeded until the cause of the overheat warning has been investigated and corrected.

Before carrying out a full diagnostic inspection ensure that the vehicle did not run out of fuel.

If the overheat warning lamp illuminates for reasons other than the above, a fault has occurred in:
a. The various systems that lead into the exhaust (i.e. fuel system, air injection system, etc.) or in the exhaust itself particularly the catalytic converter. Any faults in these areas can be determined as **system faults.**
b. The overheat warning circuit (i.e. faulty converter thermocouple (sensor), wiring connections, etc.) causing the lamp to illuminate although the system is operating satisfactorily. These faults can be determined as **circuits faults.**

Further conditions may apply when investigating possible faults with the overheat warning system, as follows:
a. The car has been returned with the warning lamp illuminated.
b. The car has been returned for investigation when the warning lamp has been illuminated but is **not illuminated at the time of** the investigation.

Warning lamp illuminated
1. Ensure that the normal safety precautions (i.e. parking brake is firmly applied, etc.) are carried out and the ignition is switched on.
2. Carefully observe if the vehicle appears exceptionally hot particularly in the area of the catalytic converters. If hotter than is usual for a car fitted with catalysts suspect a **system fault.**
3. Raise the car bonnet, locate the Lucar connections for the catalytic converter thermocouples (sensors) and disconnect each brown cable in turn. The connections are situated adjacent to the front left-hand road spring pot cover and the valance. The brown and blue cables, together with the control box loom enter the engine compartment from under the front wing (see Fig. U41).
4a. If the warning lamp extinguishes a **system fault** can be suspected proceed to Operation 5.
b. If the warning lamp continues to be illuminated a **circuit fault** can be suspected, proceed to Operation 5.
After Operation 4 connect the brown cables to their respective connections.
5. Position the car on a ramp and carry out Operation 1.
6. From beneath the car, carefully observe the area around the catalytic converter assemblies. The catalytic converters and surrounding area will normally be very hot, however, excessive temperature caused by a **system fault** will result in the overheat warning lamp illuminating.
7. Switch off the ignition and allow the car to

cool down. When the car is cold switch on the ignition and check the warning lamp as follows.
a. If the warning lamp is still illuminated suspect a **warning circuit** fault and check out the circuits as detailed in the service checks.
b. If the warning lamp is not illuminated suspect a fault in one of the systems feeding into the exhaust (**system fault**).

From the evidence gained by carrying out Operations 1 to 7 inclusive it can be determined if the vehicle has a **system fault** or a **warning circuit fault** and the information listed in the appropriate section should be consulted.

Warning lamp not illuminated at the time of investigation

1. Ensure that the normal safety precautions (i.e. parking brake is firmly applied, etc.) are carried out and the ignition is switched on.
2. Raise the car bonnet and carry out service checks on the **catalytic converter thermocouple** and **control box.**
3. If all the service checks on the warning circuits prove satisfactory a **system fault** should be suspected.

From the evidence gained by carrying out Operations 1 to 3 inclusive it can be determined if the vehicle has a **system fault** or a **warning circuit fault** and the information listed in the appropriate section should be consulted.

System faults

The following is a list of components and systems that may contribute to a malfunction in the exhaust resulting in overheating of the catalytic converter

Note

Any condition resulting in an engine misfire or uneven running should always be investigated first as this condition could result in the catalytic converters overheating.

1. Faulty air injection system.
2. Faulty air pressure relief valve.
3. Ignition system faulty (including ignition timing).
4. Fouled sparking plugs.
5. Incorrect float chamber depression.
6. Incorrect purge flow rate.
7. Blocked fuel feed line.
8. Fouled float chamber filters.
9. Choke system operation incorrect (including choke hold solenoid).
10. Sticking carburetter piston.
11. Fouled carburetter float chamber or jet.
12. Exhaust gas recirculation valves failed.
13. Air leak into induction system.
14. Failed exhaust gas recirculation cut-off solenoid, cut-out switch or electrical supply circuit.
15. Failed anti 'run-on' solenoid or electrical supply circuit.
16. Faulty hot idle mixture compensator.
17. Weakening device filter blocked or blockage in rubber connecting hoses.
18. Flooding of carburetter float chamber or jet.
19. Incorrect operation of temperature controlled air intake system.

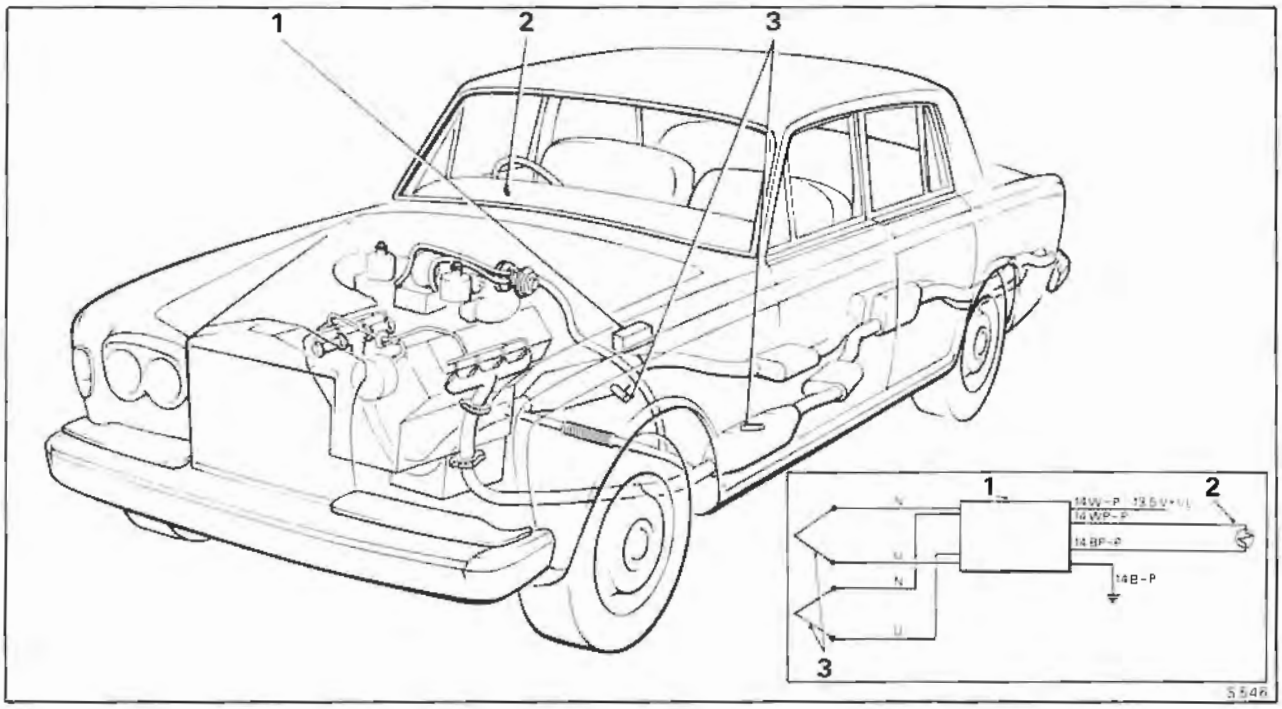

Fig. U40 Overheat warning system
1 Control unit 2 Warning lamp 3 Catalyst thermocouple probe

Printed in England
© Rolls-Royce Motors Limited 1980
April 1980
TSD 4200
(Japan
1980 Model year)

Note
Should the overheat warning lamp illuminate while testing is in progress, disconnect and blank off the air injection system check valves. This action should prevent overheating of the catalyst whilst the remaining tests are completed.

Warning circuit faults
The following is a list of components within the overheat warning system that may contribute to a malfunction of the warning system.

A theoretical wiring diagram of the warning circuits is illustrated in Figure U40.

1. Catalyst overheat warning control box and wiring.
2. Warning lamp.
3. Catalyst thermocouple probes and wiring.

Service checks

Catalyst overheat warning control box and lamp - To check
1. Raise the car bonnet, locate the control box loom and the catalyst thermocouple cables on the left-hand valance adjacent to the front road spring pot cover (see Fig. U41).
2. Identify the two sets of catalyst thermocouple cables, each set has one brown and one blue cable.
3. In turn, disconnect each blue cable at its Lucar connection and connect the end from the control box through a 9 k resistor to Positive (this can be the white wire in the control box loom).
4. Switch on the ignition, if the control and wiring is correct the warning lamp will illuminate.
5. Remake the electrical connections.

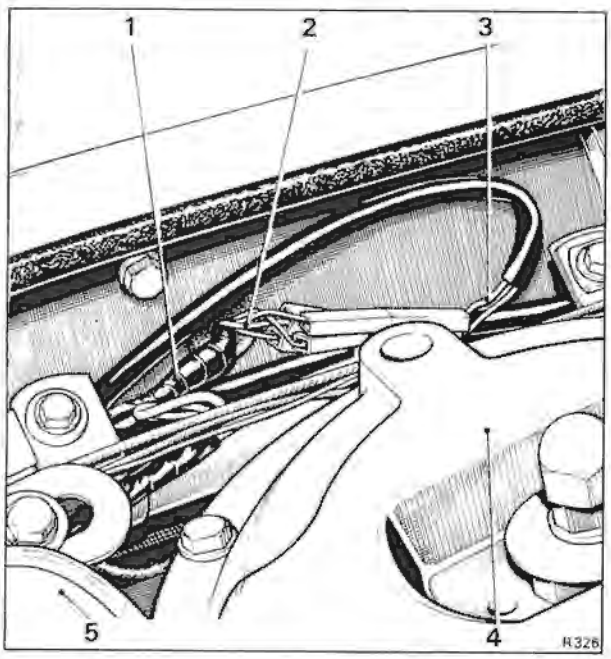

Fig. U41 Catalytic converter thermocouple probe cables and control box loom
1 Control box loom
2 Catalyst thermocouple cables (blue)
3 Catalyst thermocouple cables (brown)
4 Left-hand front road spring cover
5 Hydraulic systems reservoirs

Catalyst thermocouple probe - To check
1. Raise the car bonnet, locate the control box loom and the catalyst thermocouple cables on the left-hand valance adjacent to the front road spring pot cover (see Fig. U41).
2. Identify the two sets of catalyst thermocouple cables, each set has one brown and one blue cable.
3. In turn, disconnect each set of cables at their Lucar connections and using suitable equipment (e.g. an Avometer) ensure that the thermocouple probe is not open circuit.
4. Providing the thermocouple probes are not open circuit they are considered serviceable, however, should it be suspect for other reasons a new unit must be fitted.
5. Remake the electrical connections.

Catalyst thermocouple probe - To remove and fit
1. Unclip the thermocouple lead from the side of the catalyst.
2. Unscrew the $^{7}/_{8}$ in. A/F cap nut and withdraw the thermocouple probe from the catalyst.
3. Disconnect the 'Lucar' connections adjacent to the transmission.
4. Release the lock-nuts and free the thermocouple from its mounting at the rear end of the transmission.
5. Fit the thermocouple probe in the reverse order.

Catalyst overheat warning control box - To remove
1. Ensure that the normal safety precautions (i.e. parking brake is firmly applied,etc.) are carried out. Firmly chock the wheels.
2. Raise the front of the car on a jack and position stands beneath the car.
3. Remove the front left-hand road wheel.
4. Remove the underwing sheet.
5. Raise the car bonnet, locate the control box loom and catalyst thermocouple cables on the left-hand valance adjacent to the front road spring pot cover (see Fig. U41).
6. Disconnect the cables mentioned at their Lucar connectors and carefully feed them through the valance.
7. Remove the mounting setscrews and withdraw the control box from beneath the wing.

Catalyst overheat warning control box - To fit
1. Fit the control box by reversing the procedure given for removal, ensuring that the rubber grommet is correctly fitted to the hole in the wing valance and the cables are correctly connected in the engine compartment.

Overheat warning lamp - To remove and fit

The warning lamp is situated between the four-in-one instrument and the speedometer, directly below the main beam warning lamp on the facia.

1. To gain access to the lamp it will be necessary to remove the facia (see Chapter S).

Printed in England

© Rolls-Royce Motors Limited 1980

April 1980

TSD 4200
(Japan
1980 Model year)

Section U8

Fault diagnosis

Printed in England

© Rolls-Royce Motors Limited 1980

Symptoms	Possible Cause
1. Engine will not start. (Starter motor operating).	1. (a) Ignition circuit broken. (b) Failed anti 'run-on' solenoid or failure of electrical supply circuit. (c) Ignition system faulty. (d) Damaged or contaminated ignition high tension circuit. (e) Blocked fuel feed line, fouled float chamber filters or fouled fuel recirculation restrictor. (f) Faulty choke bi-metal coil. (g) Choke solenoid inoperative. (h) Faulty choke fast-idle mechanism. (i) Air leak into induction system. (j) Faulty hot idle mixture compensator. (k) Weakening device filter blocked, weakening device air intake non-return valve failed or blockage in rubber connecting hoses. (l) Faulty weakening device cut-off solenoid or failure of electrical supply circuit. (m) Faulty weakening device control switch or failure of electrical supply circuit. (n) Dislodged venturi in weakening device. (o) Flooding of carburetter float chamber or jet. (p) Exhaust gas recirculation valve(s) failed.
2. Engine idles very roughly.	2. (a) Ignition system faulty. (b) Fouled sparking plugs. (c) Damaged or contaminated ignition high tension circuit. (d) Fouled fuel recirculation restrictor. (e) Air leak into induction system. (f) Faulty hot idle compensator. (g) Weakening device filter blocked, weakening device air intake non-return valve failed or blockage in rubber connecting hoses.. (h) Badly worn or damaged carburetter control linkage. (i) Flooding of carburetter float chamber or jet. (j) Sticking carburetter piston. (k) Incorrect operation of carburetter jet compensation. (l) Fouled carburetter float chamber or jet. (m) Exhaust gas recirculation valve(s) failed. (n) Incorrect operation of temperature controlled air intake system.
3. Engine stalls.	3. (a) Ignition circuit broken. (b) Failed anti 'run-on' solenoid or failure of electrical supply circuit. (c) Ignition system faulty. (d) Damaged or contaminated ignition high tension circuit.

April 1980

TSD 4200
(Japan
1980 Model year)

Symptoms	Possible Cause
3. Engine stalls (continued).	(e) Blocked fuel feed line, fouled float chamber filters or fouled fuel recirculation restrictor. (f) Air leak into induction system. (g) Faulty hot idle mixture compensator. (h) Weakening device filter blocked, weakening device air intake non-return valve failed or blockage in rubber connecting hoses. (i) Badly worn or damaged carburetter control linkage. (j) Flooding of carburetter float chamber or jet. (k) Sticking carburetter piston. (l) Incorrect operation of carburetter jet compensation. (m) Fouled carburetter float chamber or jet. (n) Exhaust gas recirculation valve(s) failed.
4. (i) Engine shows signs of power loss evident at high speeds and loading. (ii) Engine misfires particularly on hard acceleration from low speed.	4. (a) Ignition system faulty. (b) Fouled sparking plugs. (c) Damaged or contaminated ignition high tension circuit. (d) Blocked fuel feed line or fouled float chamber filters. (e) Choke system operation incorrect. (f) Sticking carburetter piston. (g) Fouled carburetter float chamber or jet. (h) Faulty exhaust gas recirculation full throttle cut-out switch or failure of electrical supply circuit. (i) Exhaust gas recirculation valve(s) failed. (j) Failed exhaust gas recirculation valve(s) cut-out solenoid or electrical supply circuit.
5. Engine hesitates or misfires under light load.	5. (a) Failed anti 'run-on' solenoid or failure of electrical supply circuit. (b) Ignition system faulty. (c) Fouled sparking plugs. (d) Damaged or contaminated ignition high tension circuit. (e) Blocked fuel feed line or fouled float chamber filters. (f) Air leak into induction system. (g) Faulty hot idle mixture compensator. (h) Weakening device filter blocked, weakening device air intake non-return valve failed or blockage in rubber connecting hoses. (i) Dislodged venturi in weakening device. (j) Flooding of carburetter float chamber or jet. (k) Incorrect operation of carburetter jet compensation. (l) Fouled carburetter float chamber or jet. (m) Exhaust gas recirculation valve(s) failed. (n) Incorrect operation of temperature controlled air intake system.
6. Increase in fuel consumption.	6. (a) Ignition system faulty. (b) Fouled fuel recirculation restrictor. (c) Faulty choke bi-metal coil. (d) Choke system operation incorrect. (e) Air leak into induction system. (f) Faulty hot idle mixture compensator.

Symptoms	Possible Cause
6. Increase in fuel consumption (continued).	(g) Weakening device filter blocked, weakening device air intake non-return valve failed or blockage in rubber connecting hoses. (h) Faulty weakening device cut-off solenoid or failure of electrical supply circuit. (i) Faulty weakening device control switch or failure of electrical supply circuit. (j) Air leak in mixture weakening system. (k) Flooding of carburetter float chamber or jet. (l) Sticking carburetter piston. (m) Incorrect operation of carburetter jet compensation. (n) Incorrect purge flow rate. (o) Exhaust gas recirculation valve(s) failed.
7. Engine 'backfires' on overrun.	7. (a) Ignition system faulty. (b) Air leak into induction system. (c) Faulty hot idle mixture compensator. (d) Exhaust gas recirculation valve(s) failed.
8. Sudden increase in engine idle speed.	8. (a) Faulty choke fast-idle mechanism. (b) Failed carburetter overrun valve.
9. Excessive noise from air injection pump or system.	9. (a) Faulty or damaged air injection pump, relief or check valves, connecting hoses or pipes.

Printed in England
© Rolls-Royce Motors Limited 1980

Section U9

Workshop tools

Tool Number	Description
RH 8090	Pliers - wire hose clips
RH 8725	Flowmeter (rotameter type)
RH 8841	Dial gauge - carburetter piston lift
RH 8880	Setting jig - throttle levers
RH 8945	Connector - choke stove pipe
RH 9096	Fitting tool - 'A' bank mixture adjusting screw tamperproof seal
RH 9097	Fitting tool - 'B' bank mixture adjusting screw tamperproof seal
RH 9105	Kit - to adapt RH 8841 to fit S.U. HIF 7 carburetters

Printed in England
© Rolls-Royce Motors Limited 1980
April 1980
TSD 4200
(Japan
1980 Model year)

Section U10

Running changes

Printed in England

© Rolls-Royce Motors Limited 1980

April 1980

TSD 4200
(Japan
1980 Model year)

S 263

Printed in England

© Rolls-Royce Motors Limited 1977

January 1977

T.S.D. 4200

Chapter U

Emission control systems

Applicable to 1977 model year cars destined for USA & Canada

Section

U1 Introduction
U2 Exhaust emission control system
U3 Fuel evaporation emission control system
U4 Crankcase emission control system
U5 Carburetters and Automatic choke system
U6 Ignition system
U7 Electrical components
U8 Fault diagnosis
U9 Workshop tools
U10 Running changes

Chapter U - 1977 U.S.A. & Canada

Issue record sheet 1

November 1979

The dates quoted below refer to the issue date of individual pages within this chapter.

Section	U1	U2	U3	U4	U5	U6	U7	U8	U9	U10
Page No.										
1	Jan 77	Jan 77	Jan 77	Jan 77	Jan 77	Nov 79	Jan 77	Jan 77	Jan 77	Jan 77
2	Jan 77	Jan 77	Jan 77	Jan 77	Jan 77	Nov 79	Jan 77	Jan 77		
3	Jan 77	Jan 77	Jan 77		Jan 77		Jan 77	Jan 77		
4	Jan 77	Jan 77	Jan 77		Jan 77		Jan 77			
5		Nov 79	Jan 77		Jan 77					
6		Nov 79	Jan 77		Jan 77					
7		Jan 77	Jan 77		Jan 77					
8		Jan 77	Jan 77		Jan 77					
9			Jan 77		Jan 77					
10			Jan 77		Jan 77					
11					Jan 77					
12					Jan 77					
13					Jan 77					
14										
15										
16										
17										
18										
19										
20										
21										
22										
23										
24										
25										
26										
27										
28										
29										
30										
31										
32										
33										
34										
35										
36										
37										
38										
39										
40										
41										
42										
43										
44										
45										
46										
47										
48										

Printed in England

© Rolls-Royce Motors Limited 1979

Section U1

Introduction

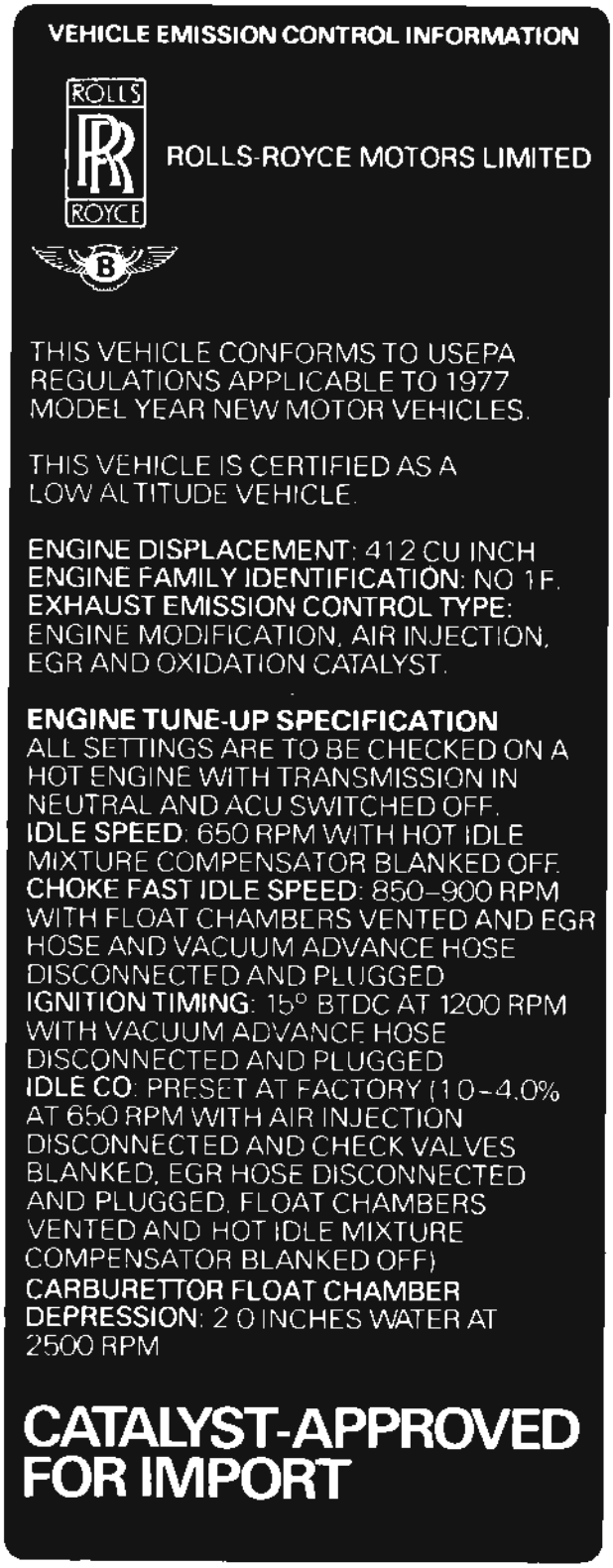

Fig. U1 Emission control certification label

Identification

This Chapter has been written specifically for cars fitted with Emission Control Systems conforming to the North American regulations applicable to 1977 model year new motor vehicles.

It is important therefore that Service Personnel fully understand the contents of this Chapter so that the special servicing can be correctly carried out.

Rolls-Royce and Bentley motor cars conforming to the above regulations and produced to the 1977 model year specification can be readily identified as follows:

1. **Car Serial Number**
A letter F as the last prefix letter of the Car Serial Number (e.g. SRF or LRF, etc.).
2. **Emission Control Certification Label**
A 1977 Emission Control Certification Label (similar to Figure U1) located on top of the automatic air conditioning system heater box, inside the engine compartment.

Engine compartment

Figures U2 and U3 overleaf show the location of the major emission control system components within the engine compartment.

Hose routing diagram

Figure U4 within the Introduction section gives details of the various hose 'runs' and connections in and around the engine compartment, that are associated with the emission control systems components.

Torque tightening

When fitting the various emission control systems components, ensure that the securing nuts and set-screws are tightened to the torque figures given in Chapter P, unless otherwise stated in this Chapter.

Printed in England

© Rolls-Royce Motors Limited 1977

January 1977

T.S.D. 4200
(USA and Canada)

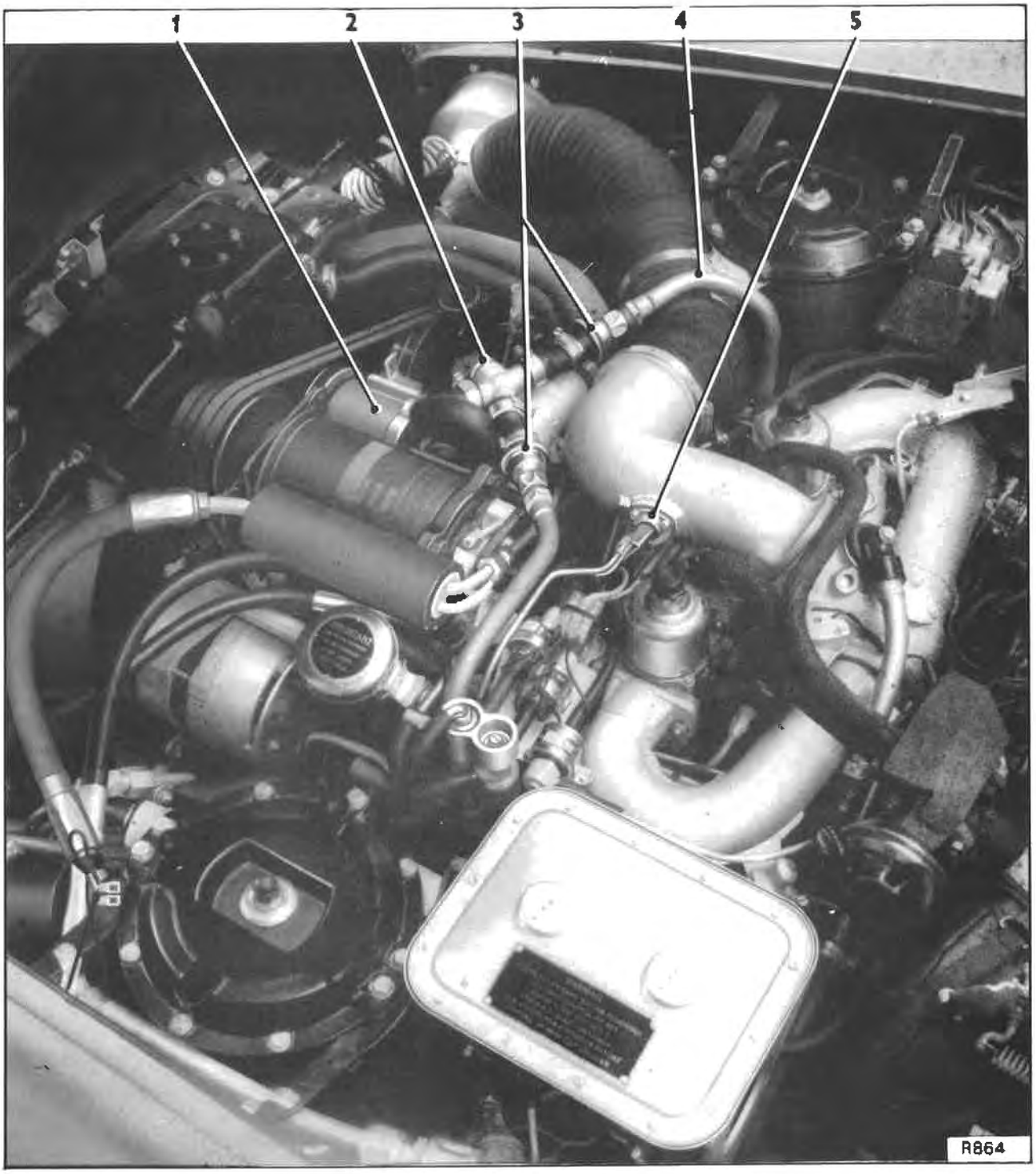

Fig. U2 Engine compartment details (L.H. side)

1 Air pump
2 Connection block and relief valve
3 Check valves
4 'A' bank air manifold
5 Weakening device cut-out switch

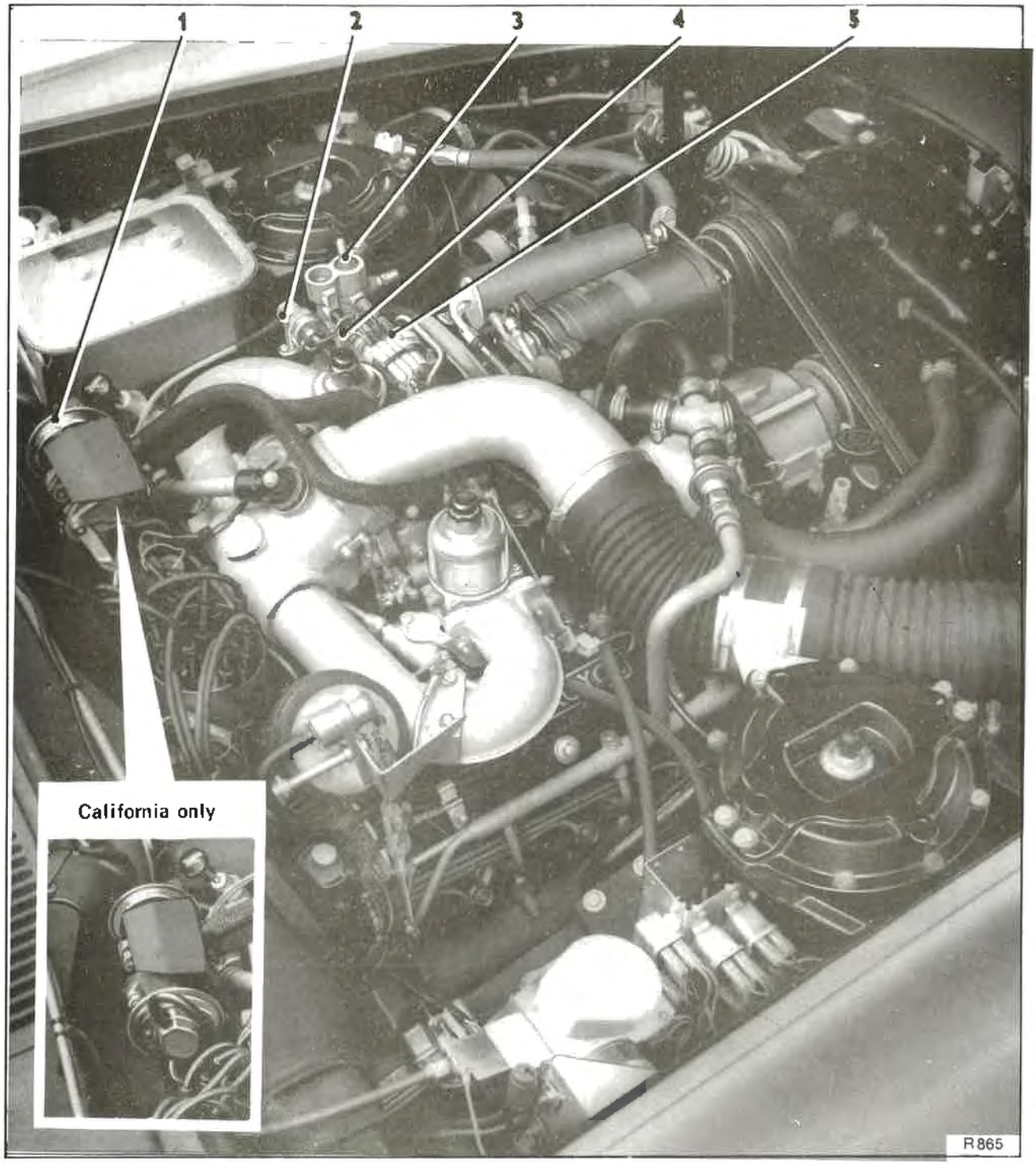

Fig. U3 Engine compartment details (R.H. side)

1 Exhaust gas recirculation valve(s)
2 Exhaust gas recirculation cut-off solenoid
3 Weakening device assembly
4 Weakening device cut-off solenoid
5 Anti 'run-on' solenoid

Printed in England
© Rolls-Royce Motors Limited 1977

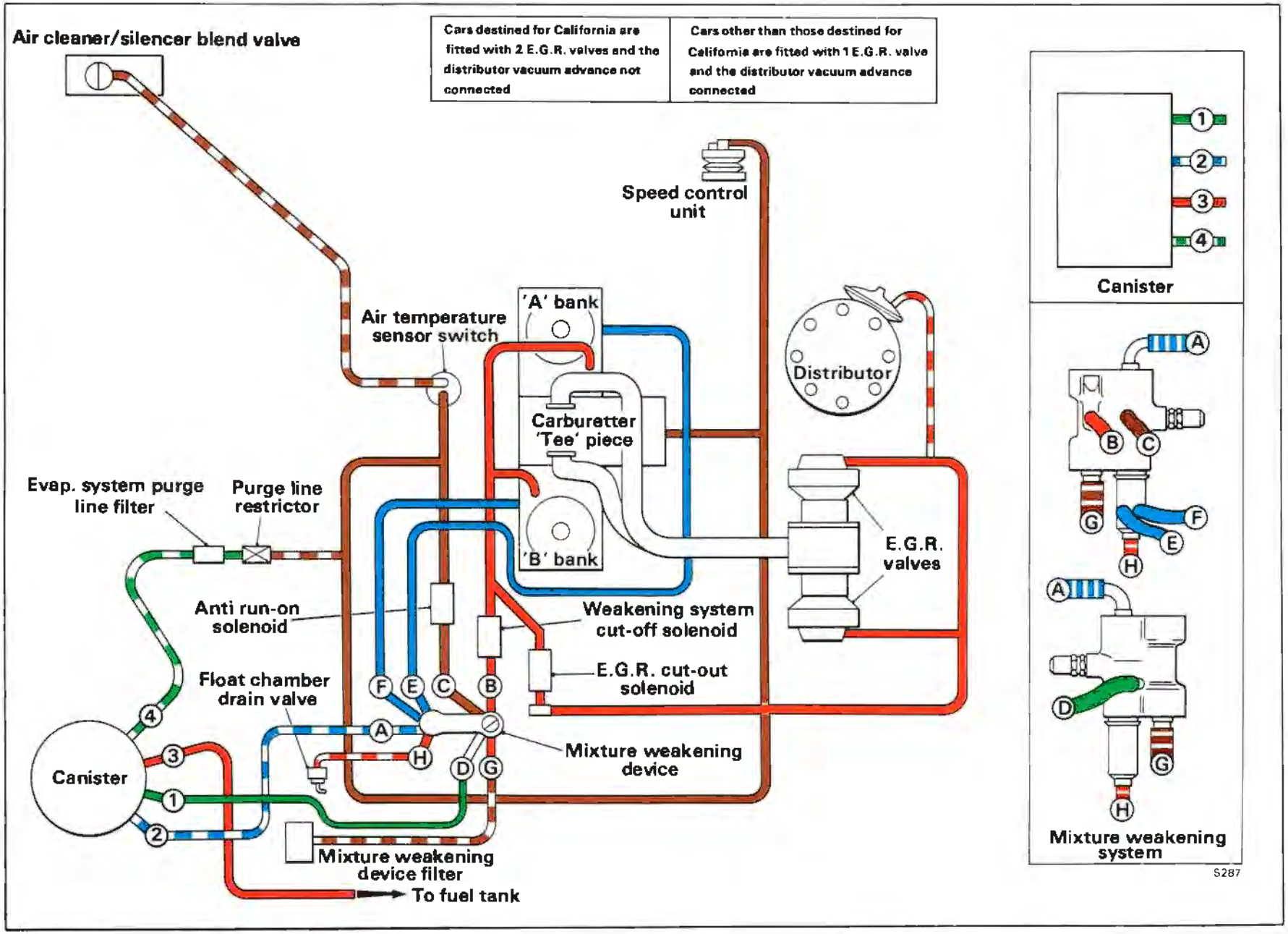

Fig. U4 Hose routing diagram - 1977 model year cars

Section U2

Exhaust emission control system

The Exhaust Emission Control System is designed to reduce the carbon monoxide, unburnt hydrocarbon and oxides of nitrogen content in the exhaust gases.

This system does not eliminate the danger caused by inhaling exhaust gases in a confined area.

Air from the atmosphere is drawn into the engine driven air injection pump through a centrifugal filter. From the pump, a quantity of air proportional to engine speed passes via a three-way connection block (containing a relief valve), through check valves to the air manifolds and then into the exhaust ports. This air combines with the exhaust gases discharged from the combustion chambers and promotes the oxidation process in the exhaust system and catalytic converters. The gases then pass through the exhaust system to atmosphere.

In addition, a proportion of the exhaust gas from the exhaust balance pipe situated between the two downtake pipes, is recirculated through a vacuum operated metering valve(s) into the carburetter 'tee' piece, just downstream of the throttle plates. The recirculated exhaust gas mixes with the inlet charge of fuel/air mixture in the induction manifold and is distributed to the cylinders, lowering the peak combustion temperature and reducing oxides of nitrogen emissions.

Before commencing work on the exhaust emission control system, care should be taken to ensure that the relevant components are not hot.

The system is illustrated in Figure U5 and comprises the following main components.

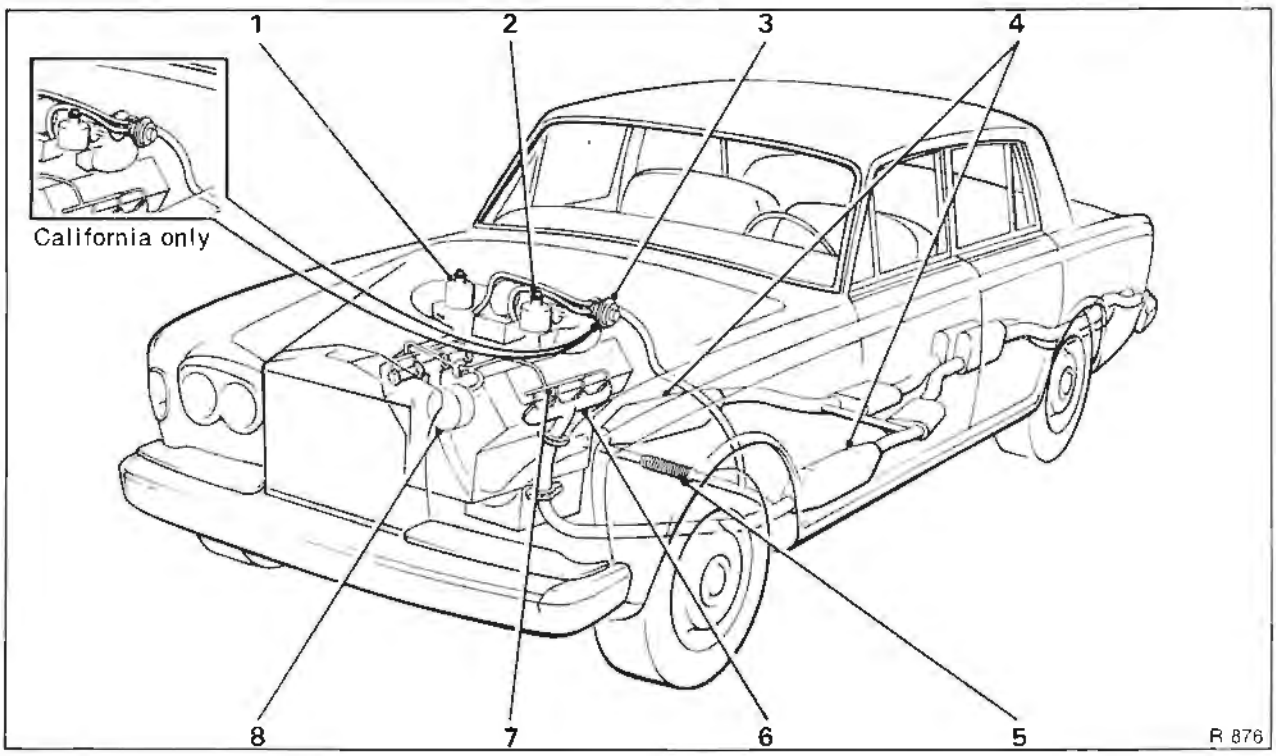

Fig. U5 Exhaust emission control system

1 'A' bank carburetter
2 'B' bank carburetter
3 Exhaust gas recirculation valve(s)
4 Catalytic converters
5 Exhaust system balance pipe
6 'B' bank exhaust manifold
7 'B' bank air manifold
8 Air pump

Printed in England
© Rolls-Royce Motors Limited 1977
January 1977
T.S.D. 4200
(USA & Canada)

Air injection system (see Fig. U6)
Air manifolds
Air pump
Check valves
Centrifugal air filter
Pressure relief valve
Three-way connection block

Exhaust gas recirculation system (E.G.R.) (see Fig. U9)
Cut-off solenoid (see Section U7)
Cut-out switch (see Section U7)
Distribution pipes
E.G.R. valve(s)
E.G.R. valve(s) heatshield
Feed pipe
Full throttle cut-out micro-switch (see Section U7)

Oxidation catalyst system (see Figs. U5 and U12)
Catalytic converters
(For the remainder of the Exhaust system refer to Chapter Q).

For details of the servicing and maintenance requirements of the Exhaust Emission Control System, refer to the Service Schedules Manual - T.S.D. 4117.

Air injection system (see Figs U5 and U6)
A detailed description of the air injection system is given at the beginning of this section.

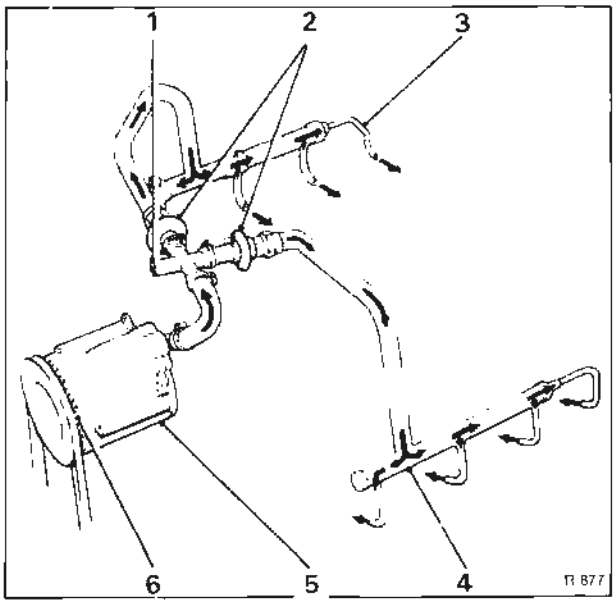

Fig. U6 Air injection system
1 Relief valve
2 Check valves
3 'A' bank air manifold
4 'B' bank air manifold
5 Air pump
6 Air pump intake

Air injection system - To test
1. Connect an electric impulse tachometer to the engine in accordance with the manufacturer's instructions.
2. Start and run the engine at a constant speed of 2 000 r.p.m., check that air does not escape from the relief valve.
3. If air does escape during Operation 2, check that the correct (blue) setting plug is fitted to the pressure relief valve.
4. If the system does not operate as described in Operation 2, stop the engine and fit a new three-way connection block assembly (containing the pressure relief valve).
5. Repeat Operation 2.
6. Stop the engine and remove the test equipment.

Air injection system - Leak check
Check the air injection system for air leaks by carrying out the following sequence of operations.
1. Ensure that the ignition is switched off.
2. Visually inspect the condition of all hoses, pipes and joints associated with the air injection system.
3. Ensure that all worm drive clips are tight.
4. Start the engine and listen carefully for any evidence of an air leak from the system.
5. If an air leak is suspected it is permissible to coat the component or hose with a soap solution; soap bubbles will confirm an air leak.

Air injection system - Fault diagnosis
To diagnose malfunctioning of the air injection system refer to Section U8 - Fault diagnosis of this Chapter.

Air manifolds
The air manifolds convey air from the check valves to the engine exhaust ports. One air manifold is fitted to each bank of cylinders and is identified as 'A' bank air manifold or 'B' bank air manifold.

To remove an air manifold, unscrew the check valve union and the four ¾ in. A/F adapters in the cylinder head.

The 'A' bank air manifold is reasonably straight forward to withdraw but 'B' bank air manifold will require the disconnecting of several other hoses and pipes (e.g. choke stove pipes, fuel evaporation weakening device hoses and pipes, etc.), to facilitate withdrawal.

Fit the air manifolds by reversing the procedure given for removal, noting that the check valve union has a tapered thread. All the adapters in the cylinder head should be torque tightened to the figures given in Chapter P.

Air pump
The air pump is of the rotary vane type and is belt driven from the engine coolant pump. The centrifugal air filter is an integral part of the pump and is situated between the pump body and the pump driving pulley.

Air pump - To remove (see Fig. U7)

1. Disconnect the battery (refer to Chapter M).
2. Unscrew the worm drive clip and detach the hose from the pump to the three-way connection block, at the pump. Blank off the hose and pump connections to prevent the ingress of dirt, etc.
3. Slacken the two 7/16 in. A/F setscrews on the drive belt adjustment strut; remove the upper bolt.
4. Remove the drive belt from the pulley.
5. Support the air injection pump and unscrew and remove the 7/16 in. A/F mounting setscrew situated on the opposite side of the pump pulley.

Air pump - To fit

Fit the air pump by reversing the procedure for removal noting the following

1. Ensure that the driving belt is adjusted so that an applied force of 5,5 kg. (12 lbs.) mid-way between the air injection pump pulley and the coolant pump pulley causes the belt to deflect 9,5 mm. (0.375 in.).

Air pump pulley

1. To remove, unscrew and remove the three set-screws situated around the centre of the pulley. Withdraw the pulley.
2. To fit the pulley, reverse the procedure given for removal ensuring that the setscrews are torque tightened to the correct figure (see Chapter P).

Check valves

The check valves are non-return valves (one-way valves) and one is fitted into the air injection system between the air pump and the air manifolds, for each bank of cylinders.

The check valves prevent the backflow of exhaust gases into the air lines or air pump, they operate whenever the exhaust back pressure exceeds the air pump delivery pressure at high speed and/or in the case of air pump drive belt failure.

To remove a check valve, slacken the worm drive clip situated on the air pump to check valve hose. Unscrew the union from the air manifold and withdraw the check valve. Fit a check valve in the reverse order.

Pressure relief valve (see Figs. U6 and U8)

The spring loaded pressure relief valve is permanently housed within the three-way connection block, its function is to allow excess air to escape from the air injection system when the check valves are closed. The relief valve prevents damage to the pump vanes and excess exhaust temperatures under extreme operating conditions.

If it becomes necessary to remove the pressure relief valve three-way connection block, slacken the worm drive clips on the three connecting hoses and withdraw the assembly.

To test the pressure relief valve, blank off the two connections for the check valves and apply pressure to the connection from the pump; ensure that the relief valve operates within the following acceptable limits.

0,5 kg/sq.cm. to 0,6 kg/sq.cm.
(7.4 lb/sq.in. to 8.4 lb/sq.in.)

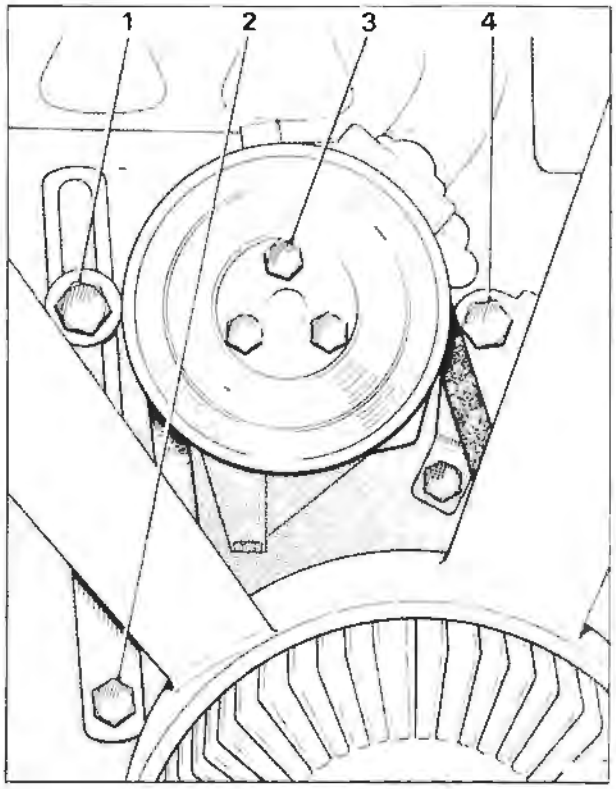

Fig. U7 Air injection pump

1 Adjustment strut upper setscrew
2 Adjustment strut pivot setscrew
3 Pulley retaining setscrews
4 Air pump mounting setscrew

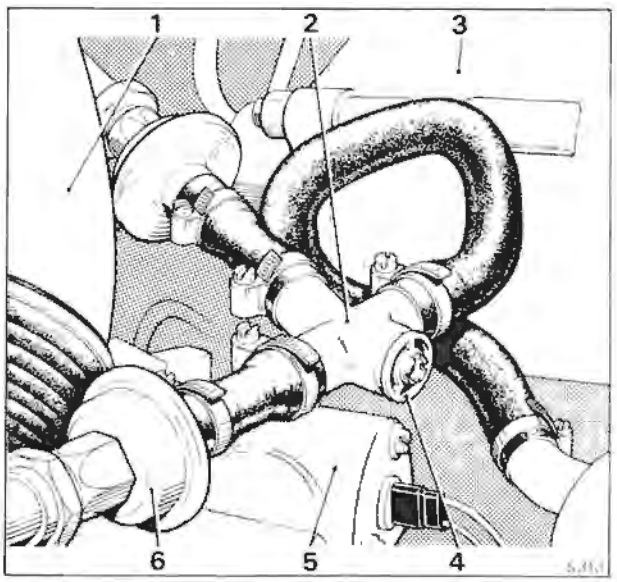

Fig. U8 Three-way connection block

1 Carburetter air intake
2 Three-way connection block
3 Refrigeration compressor
4 Air injection system pressure relief valve
5 Thermostat elbow
6 Check valve

Printed in England
© Rolls-Royce Motors Limited 1977
January 1977
T.S.D. 4200
(USA & Canada)

Exhaust gas recirculation system (E.G.R.) (see Figs. U5 and U9)

A detailed description of the exhaust gas recirculation system (E.G.R.) is given at the beginning of this section.

Distribution pipes

The distribution pipes convey the recirculated exhaust gas from the E.G.R. valve(s) into the carburetter 'tee' piece.

Distribution pipes - To remove

1. Using a 7/16 in. A/F spanner unscrew and remove the two nuts and washers securing the distribution pipes to the E.G.R. valves joint.
2. Unscrew the 7/16 in. A/F setscrews retaining the heatshield to 'B' bank air horn; collect the washers.
3. Ease the mounting block rearward to free the joint face, discard the gasket.
4. Support the weight of the distribution pipes.
5. Unscrew and remove the four 2 B.A. setscrews and washers securing the two distribution pipe flanges to the carburetter 'tee' piece.
6. Withdraw the distribution pipes and discard the gaskets.

Distribution pipes - To fit

Fit the distribution pipes by reversing the procedure given for removal, noting the following points.

1. Ensure that all joint faces are clean and free from carbon deposits.
2. Coat the joint faces and gaskets at the carburetter 'tee' piece with 'Wellseal'.

Distribution pipes - To clean

1. Remove the distribution pipes as described in Distribution pipes - To remove.
2. With a pointed scraper clean as much carbon deposit as possible from inside the distribution pipes and the joint faces.
3. Using wire brushes complete the cleaning operation on the distribution pipes.
4. With a pointed scraper remove the carbon deposits from the carburetter 'tee' piece connection orifices.
5. Before fitting the distribution pipes thoroughly blow-out the pipes and carburetter 'tee' piece connections with compressed air.
6. Fit the distribution pipes as described in Distribution pipes - To fit.

E.G.R. valve(s) (see Fig. U10)

A proportional flow recirculation system is used. Exhaust gas from the balance pipe between the two downtakes of the dual exhaust system passes through a metering orifice and is recirculated into the carburetter 'tee' piece. Atmospheric pressure is maintained downstream of the metering orifice by means of the control valve so that the recirculation flow is proportional to the relative effective areas of the metering orifice and the main exhaust system.

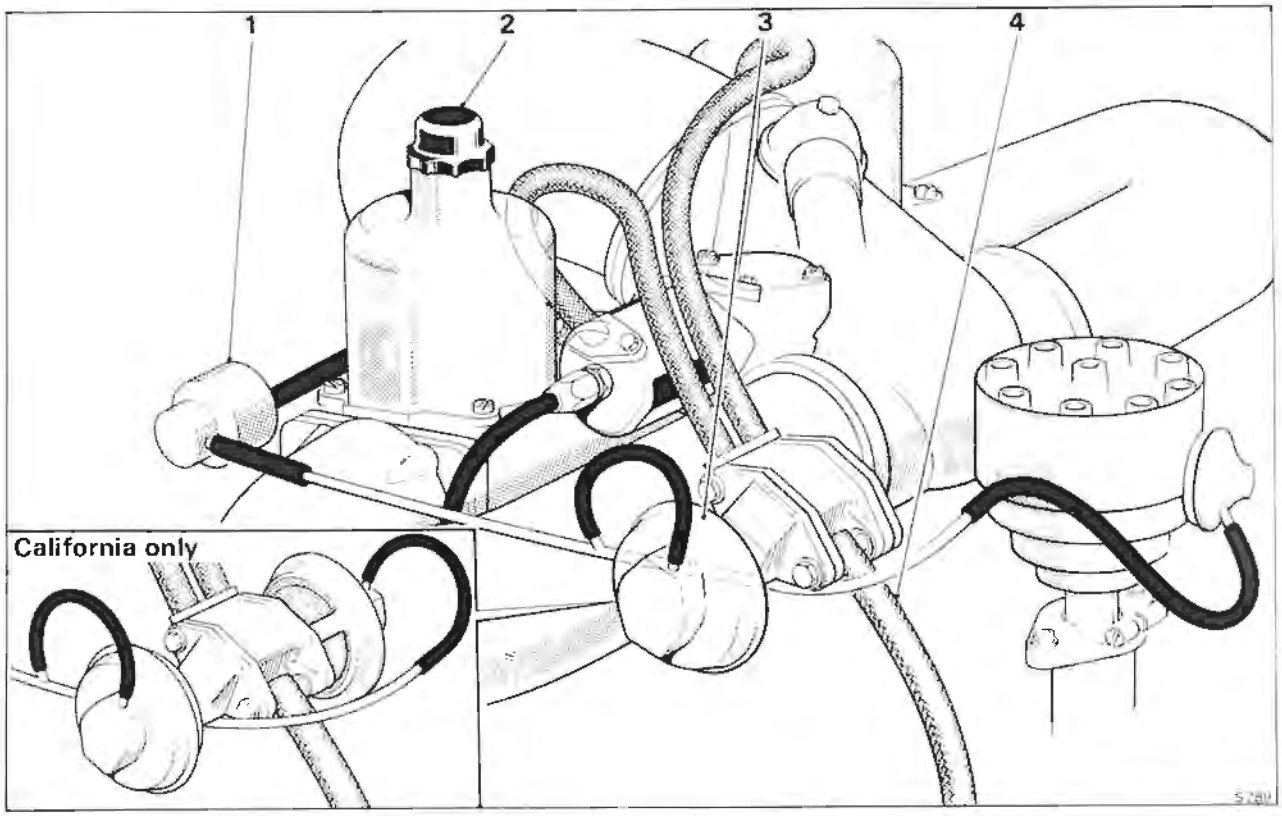

Fig. U9 Exhaust gas recirculation system

1 E.G.R. cut-off solenoid
2 'B' bank carburetter
3 E.G.R. valve(s)
4 E.G.R. feed pipe

Dilution of the inlet charge with exhaust gas lowers the peak combustion temperature and reduces the formation of oxides of nitrogen.

A vacuum operated control valve with integral pressure transducer is used and the metering orifice is incorporated in an extension of the valve seat. A carburetter throttle gated vacuum signal is used to operate the valve. This signal is modulated by the integral transducer valve and applied to the control valve diaphragm so that the control valve lift is adjusted to maintain a constant control pressure, just above atmospheric pressure between the metering orifice and the control valve seat.

When the engine load is increased, the control pressure exceeds the transducer valve setting and the transducer valve closes applying the full vacuum signal to the control valve diaphragm and thus opening the control valve and increasing the E.G.R. flow. Similarly, as the engine load is reduced, the control pressure becomes less than the transducer valve setting and the transducer valve opens, venting the diaphragm chamber to atmosphere and causing the control valve to close and reduce the E.G.R. flow. The transducer valve constantly cycles adjusting the control valve lift to maintain a constant control pressure under all normal operation conditions.

The use of a throttle gated vacuum signal ensures complete control valve closure at idle to maintain good idle quality.

To improve starting and drive-away under low temperature conditions a solenoid valve (see Section U7) interrupts the carburetter vacuum signal to the E.G.R. valve until a predetermined coolant temperature is reached.

A micro-switch operated by the throttle lever (see Section U7) also controls this solenoid to provide E.G.R. cut-out at full throttle. At high engine speed the exhaust gas back pressure is high. As a result, the integral transducer valve directs full carburetter vacuum signal to the control valve. At high engine speed under full throttle operation the air intake restriction is sufficient to produce a carburetter vacuum signal large enough to open the control valve, this results in excessive flow under these conditions which would seriously degrade performance and reduce the safety margin for overtaking.

On cars destined for California the exhaust gas recirculation system employs twin metering valves, both having identical calibrations. Other cars are fitted with a single metering valve.

E.G.R. valve(s) - To remove

1. Detach the small diameter rubber hose from the valve.
2. Unscrew and remove the two ½ in. A/F nuts retaining the valve to the mounting flange; collect the two washers.
3. Withdraw the valve and remove the gasket from the mounting flange.

Note

On cars fitted with a twin valve system a similar procedure should be adopted for the additional valve

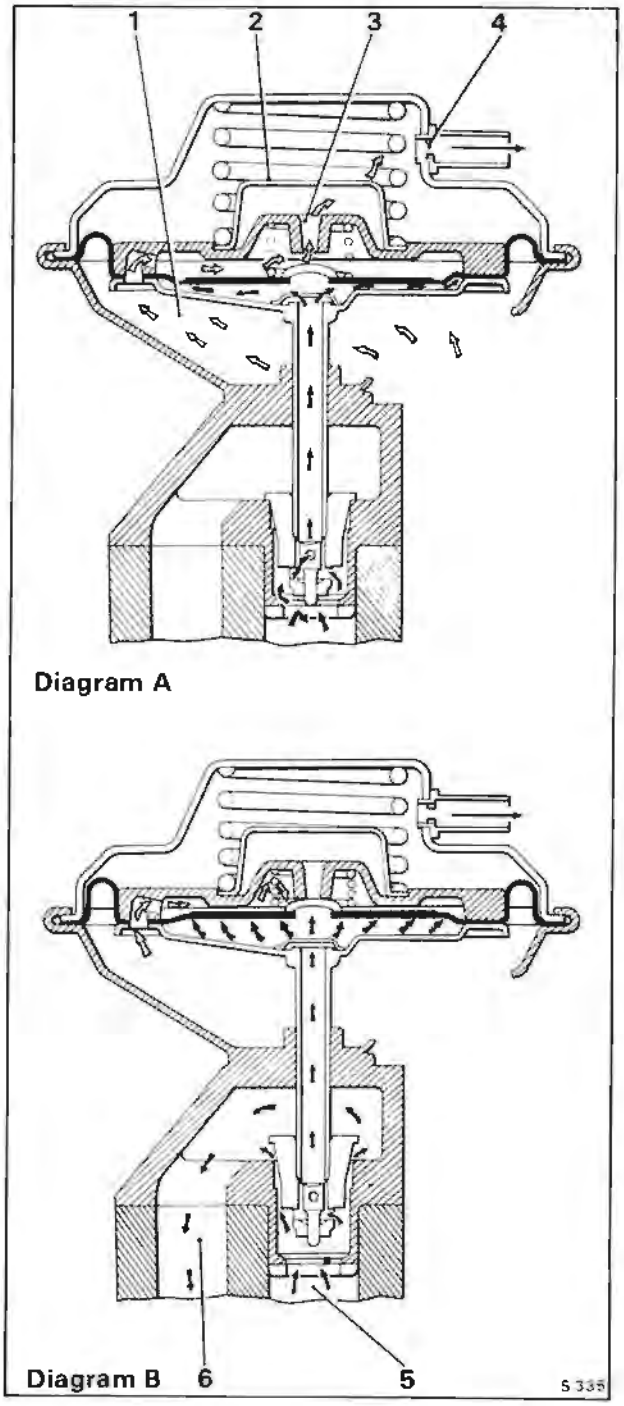

Fig. U10 Exhaust gas recirculation valve

Ambient air ⇦
Exhaust gas ⬅

Diagram A - Exhaust pressure below operating value

1 Ambient air
2 Air filter
3 Air bleed
4 Restrictor

Diagram B - Exhaust pressure above operating value

5 Exhaust gas from balance pipe
6 Exhaust gas to carburetter 'tee' piece

Printed in England
© Rolls-Royce Motors Limited 1979
November 1979
T.S.D. 4200
(USA & Canada 1977 Model year)

E.G.R. valve(s) - To fit
Fit the valve(s) by reversing the procedure for removal, noting the following points.
1. Ensure that the valve pintle (see Fig. U10) is secure on the valve stem.
2. Ensure that the valve and mounting flange joint faces are clean and free from carbon deposits.
3. Always use a new mounting flange gasket

E.G.R. valve(s) - To clean
1. Remove the valve(s) as described in E.G.R. valve(s) - To remove.
2. Using a scraper, remove all carbon film from the valve and mounting flange faces; complete the operation with a wire brush.
3. Clean the carbon from the valve using a wire brush fitted into a portable drill. Take care not to damage the valve seating area.
4. Thoroughly blow out the valve with compressed air to ensure that all loose carbon particles are removed.
5. Upon completion of the cleaning operations, fit the valve to the engine mounting flange as described in E.G.R. valve(s) - To fit.

E.G.R. valve(s) - To check
The E.G.R. system is automatically controlled by exhaust backpressure to maintain a constant E.G.R. proportion over normal road load conditions. Checks to ensure the correct operation of the valve(s) are only required under no load condition as follows.

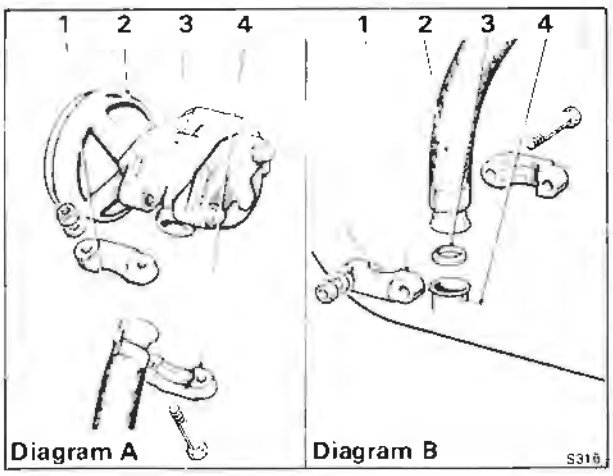

Fig. U11 E.G.R. feed pipe joints
Diagram A - Upper joint
1 Feed pipe
2 E.G.R. valve
3 E.G.R. valve mounting block
4 Clamp bracket
Diagram B - Lower joint
1 Clamp bracket
2 Feed pipe
3 Sealing ring
4 Exhaust balance pipe

1. Connect an electric impulse tachometer to the engine in accordance with the manufacturer's instructions.
2. Ensure that the parking brake is firmly applied and that the gear range selector is in the Park position
3. Ensure that the pressure tapping cap fitted to the weakening device is correctly tightened.
Start and run the engine until normal operating temperature is attained.
4. Ensure that the engine has run for at least 25 mins. after the engine coolant thermostat has opened.
5. Allow the engine to return to the idle speed.
6. Increase the engine speed slowly noting the operation of the E.G.R. valve(s).
7. **The E.G.R. valve(s) should commence to open at the following engine speeds.**
All territories (except California)
700 r.p.m. to 1 000 r.p.m.
California
700 r.p.m. to 950 r.p.m.
If the valve(s) either fail to open or open late check for the following possible causes.
a. Failed E.G.R. cut-out switch (see Section U7).
b. Failed E.G.R. cut-off solenoid (see Section U7).
c. Failed E G R. full throttle cut-out micro-switch (see Section U7).
d. Leak or blockage in the carburetter signal pipe to weakening device cut-off solenoid.
e. Leak or blockage in the E.G.R. valve signal pipe or hose from the E.G.R. cut-out solenoid to the E G R. valve(s).
f. Advanced ignition timing (see Section U6).
g. Sealing rings incorrectly fitted (see Catalytic converter - To fit).
If the valve(s) begin to open early check for the following possible cause.
a. Retarded ignition timing (see Section U6).
8. If the E G R valve(s) do not function correctly after carrying out Operations 1 to 7 inclusive, replace the offending valve(s) with new units.
9. Carry out Operations 1 to 7 inclusive.

E.G.R. feed pipe (see Fig. U5)
The E G R feed pipe conveys exhaust gas that is to be recirculated from the exhaust balance pipe to the exhaust gas recirculation valve(s).

E.G.R. feed pipe - To remove
1. Unscrew the two 7/16 in. A/F nuts from the clamp at the upper end of the feed pipe (see Fig. U11).
2. Collect the two washers and 'split' the clamp from the spherical joint.
3. Repeat Operations 1 and 2 on the lower joint adjacent to the exhaust system balance pipe.

E.G.R. feed pipe - To fit
Fit the E.G.R. feed pipe by reversing the procedure given for removal, noting the following.
1. Ensure that the joint faces are clean and free from carbon deposits.

Printed in England
© Rolls-Royce Motors Limited 1977
January 1977
T.S.D. 4200
(USA & Canada)

E.G.R. valve(s) heatshield - To remove

1. Slacken the two forward ½ in. A F nuts one on either side of the mounting flange.
2. Unscrew and remove the two 7/16 in. A F set-screws retaining the heatshield to the rear of 'B' bank air horn; collect the washers.
3. Ease the assembly forward to release the heatshield slots from the retaining studs.
4. Withdraw the heatshield.

E.G.R. valve(s) heatshield - To fit

Fit the heatshield by reversing the procedure given for removal.

Oxidation catalyst system (see Figs. U5 and U12)

A dual exhaust system is used. The catalytic converters are situated in the forward underfloor area, in place of the conventional front silencers (see Fig. U5).

Each converter contains two catalyst blocks of unequal length and has sufficient volume to perform the dual functions of converter and silencer (see Fig. U12). Two converters are fitted to each car, one for each bank of the engine cylinders.

A platinum group metal catalyst on a ceramic monolith support has been chosen for optimum conversion efficiency and rapid warm-up. Two separate blocks are used to minimise the effect of thermal shock, and these are positioned to give good gas distribution and effective utilisation of the catalyst volume.

The catalyst promotes the reaction between the residual hydrocarbons and carbon monoxide in the exhaust and the secondary air injected into the exhaust ports.

Catalytic converter protection

To protect the catalytic converter from possible damage the following precautions should always be observed.

Unleaded gasoline

Use unleaded gasoline only (91 RON Min.). The use of leaded gasoline will result in a substantial reduction in the performance of the catalyst. Under no circumstances add fuel system cleaning agents to either the fuel tank or carburetters for induction into the engine, as these materials may have a detrimental effect on the catalytic converter.

Fuel

Do not allow the vehicle to run out of fuel. If the vehicle does run out of fuel at a high speed, possible damage to the catalyst could result.

Engine malfunction

If the engine misfires or suffers from a lack of power which could be attributed to a malfunction of either the ignition or fuel systems, the vehicle should be driven only at low speed and the fault rectified as soon as possible. Driving at high speeds with a malfunction in either of these systems could cause over-heating and consequent damage to the catalyst.

Catalytic converter - To remove

1. Remove the screws retaining the relevant section(s) of the grass-fire shields below the catalytic converter.

Note

Take care when removing the shields as the sharp edges could cause injury to the operators hands.

2. Using a 9/16 in. A/F spanner, slacken the nuts on the spherical joint clamps immediately to the front and rear of the catalytic converter.
3. Support the weight of the catalytic converter and remove the nuts from the spherical joint clamps. Dismantle and remove the clamps.
4. Withdraw the catalytic converter and collect the spherical sealing rings from between the pipe connections.

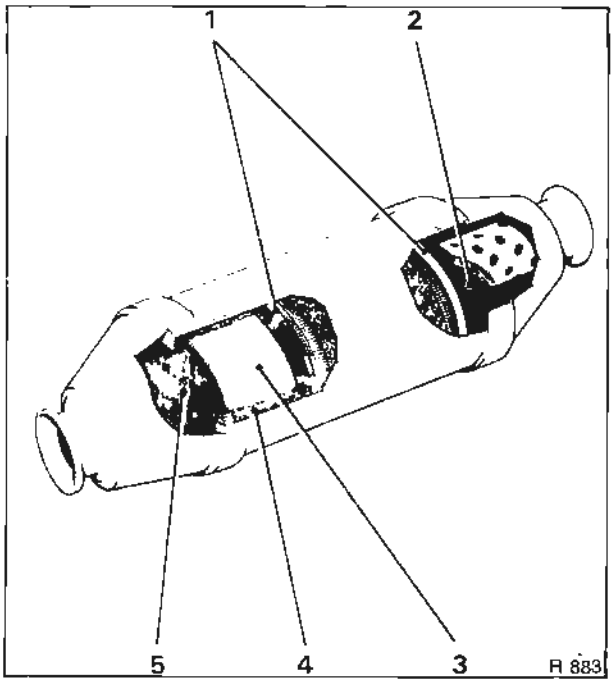

Fig. U12 Catalytic converter assembly

1 Stainless steel mesh retaining rings
2 Silencing chamber
3 Fireclay coating
4 Stainless steel mesh
5 Monolithic catalyst

Catalytic converter - To fit

Fit a catalytic converter by reversing the procedure given for removal, noting the following.

1. The seal rings and pipe flares must be thoroughly clean and free from scale and may be lightly dressed with fine emery cloth if required.

2. The clamp bolt threads should be lightly oiled to prevent binding during assembly and the spherical faces of the sealing rings and the grooves in the clamps should be smeared with a graphite lubricant, to ensure correct alignment of the pieces on assembly.

3. Fit the catalytic converter assembly complete with seal rings, then loosely fit the joint clamps.

Note

The catalytic converter assembly should be fitted with the square shaped catalyst cells (visible when looking along the short pipe into the catalytic converter assembly) towards the front of the vehicle and the perforated tube (visible when looking along the short pipe into the catalytic converter assembly) towards the rear of vehicle.

The sealing rings should be fitted between the pipe connections so that the sealing ring with the smaller diameter hole in the centre is fitted to the rear of the catalytic converter assembly.

Printed in England
© Rolls-Royce Motors Limited 1977
January 1977
T.S.D. 4200
(USA & Canada

Section U3

Fuel evaporation emission control system

The Fuel Evaporation Emission Control System eliminates direct venting of the fuel system, thus preventing the release of unburnt hydrocarbons into the atmosphere.

Vapour from the fuel system is collected and stored in a charcoal filled canister. The canister is purged whenever the engine is running and the stored fuel vapour is extracted from the charcoal and burnt in the engine.

The system is illustrated in Figure U13 and comprises the following main components.

Canister (see Fig. U14)
Carbon granules (charcoal)
Float chamber connection
Fuel tank connection
Polyurethane air filter
Purge line connection
Weakening device connection

Fuel tank (see Fig. U16)
Expansion tank
Filler cap (combined pressure/vacuum relief valve)
Rollover valve

Purge line (see Fig. U13)
Air filter
Restrictor

Weakening device (see Figs. U23 and U24)
Adjustable orifice
Air filter
Anti 'run-on' solenoid
Cut-off solenoid
Cut-out switch
Float chamber drain valve
Float chamber vent valve
Fuel receiver chamber
Non-return valves
Venturi chamber

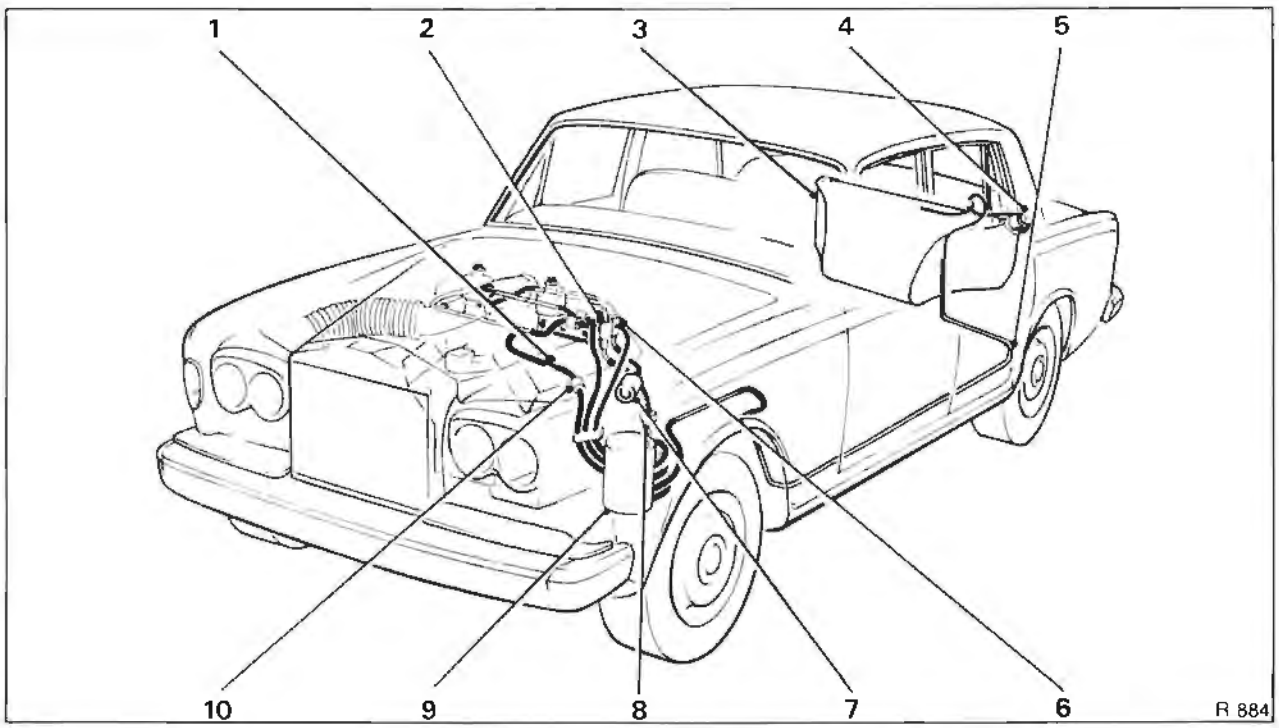

Fig. U13 Fuel evaporation emission control system

1 Purge line restrictor
2 Float chamber vent valve
3 Fuel tank
4 Fuel filler
5 Fuel vapour line
6 Weakening device
7 Weakening device filter
8 Float chamber drain valve
9 Evaporation loss control canister
10 Purge line filter

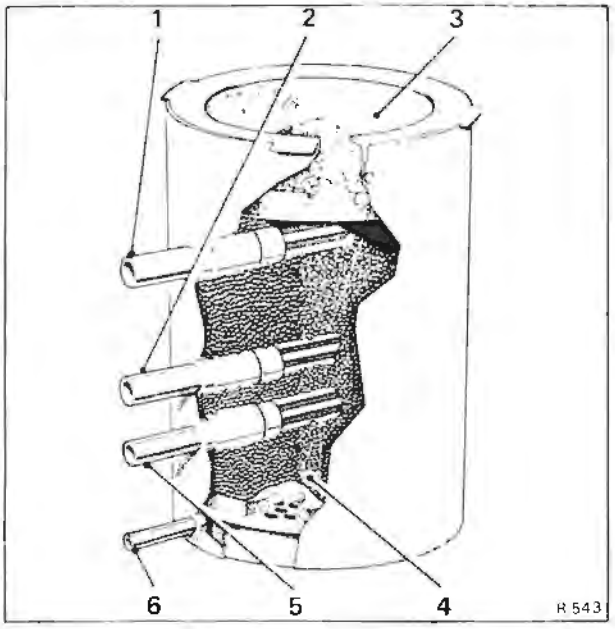

Fig. U14 Control canister
1 Weakening device connection
2 Float chamber vent connection
3 Polyurethane filter
4 Carbon
5 Fuel tank vent connection
6 Purge line connection

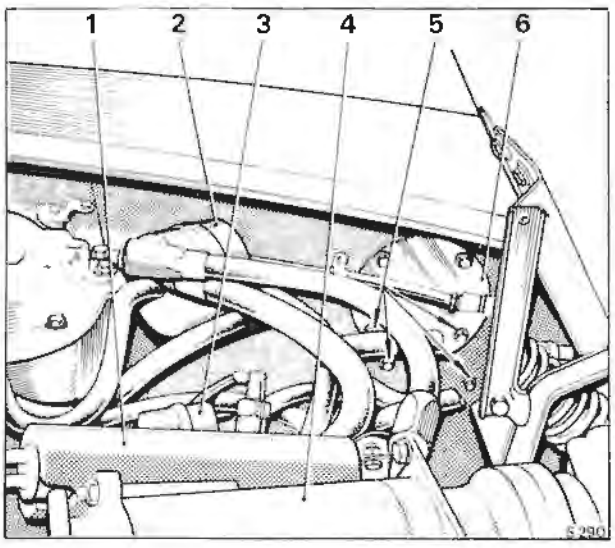

Fig. U15 Foam filter access cover, purge line filter and weakening device filter
1 Fuel cooler
2 Weakening device filter
3 Purge line filter
4 Refrigeration compressor
5 Canister securing setscrews
6 Foam filter access cover

For details of the servicing and maintenance requirements of the Fuel Evaporation Emission Control System, refer to the Service Schedules Manual - T.S.D. 4117.

Control canister (see Figs. U13 and U14)
The evaporation emission control canister is situated under the left-hand front wing. It is a cylindrical container filled with activated carbon granules which adsorb and retain fuel vapour. There are connections for the mixture weakening device vent, the fuel receiver vent, the fuel tank vent and the purge line. The top of the canister is open to atmosphere and contains a Polyurethane foam filter element.

When the engine is running, air is drawn from the atmosphere through the foam filter element and carbon granules to the lowest connection on the canister. The air, containing fuel vapour from the carbon granules then passes into the engine via the purge line.

Control canister - To remove
1. Remove the front left-hand road wheel as described in Chapter R.

Note
Left-hand is determined when viewed from the driver's seat.

2. Remove the front section of the underwing sheet by unscrewing the small screws situated around the outer edge of the sheet. Resistance may be experienced when the sheet is being freed, as it is sealed around the edge with Bostik Sealing Compound 771.
3. The canister will be clearly visible towards the front of the vehicle.
4. Using the special pliers (RH 8090), remove the steel retaining clips from the four hose connections to the canister. Label the hoses to facilitate identification and withdraw the four hose from the canister.
5. Raise the bonnet and from inside the engine compartment locate the canister foam filter access cover (see Fig. U15).
6. Unscrew and remove the four setscrews indicated as securing setscrews in Figure U15. Before removing the final setscrew support the control canister.
7. Withdraw the canister from beneath the wing.

Control canister - To fit
Fit the canister by reversing the procedure described for removal, noting the following points.
1. Ensure that the rubber hoses are in a good condition and new hose retaining clips are fitted.
2. Ensure that the underwing sheet is sealed with Bostik Sealing Compound 771.

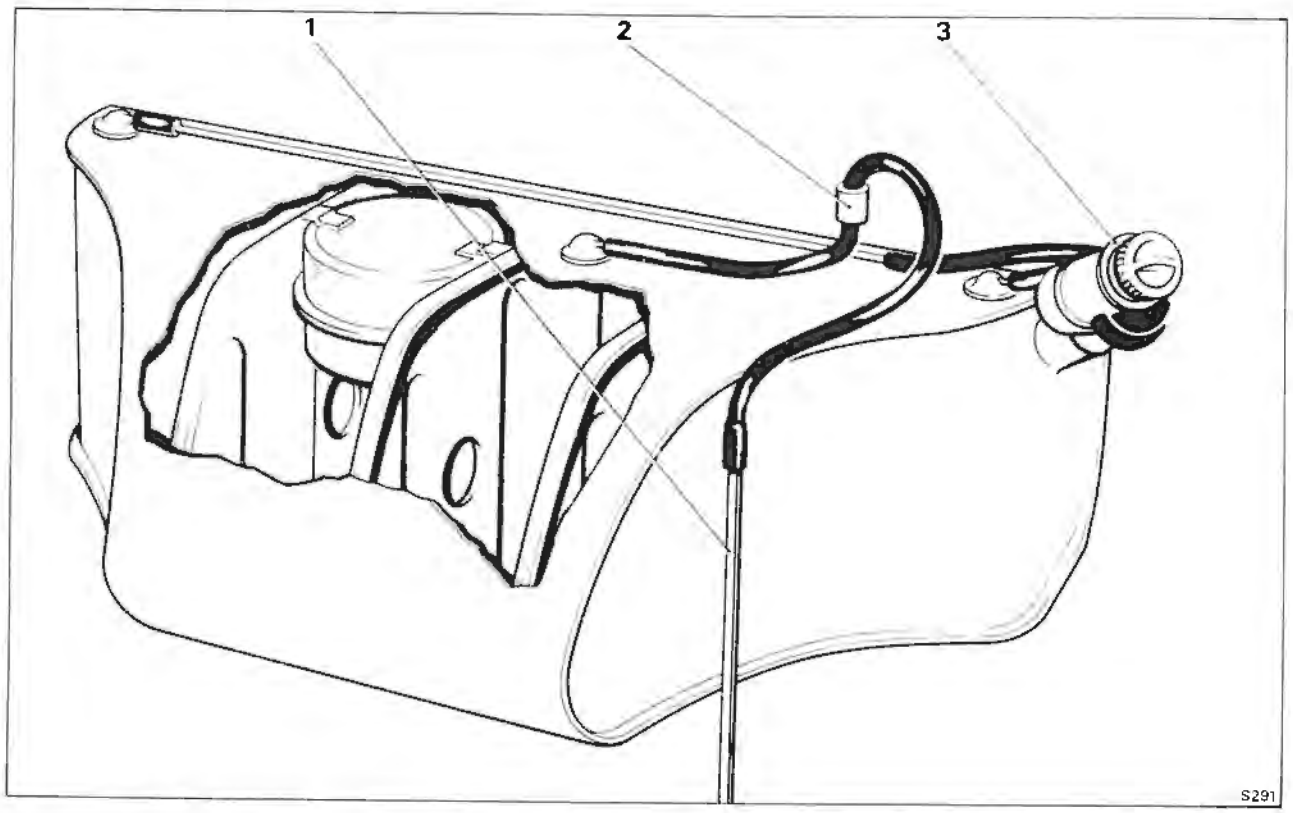

Fig. U16 Fuel tank
1 Fuel vapour line
2 Rollover valve
3 Fuel filler cap (incorporating combined pressure and vacuum relief valve)

Polyurethane foam filter element - To renew
It is not necessary to remove the canister from the car in order to extract the polyurethane foam filter element. A detachable cover is situated in the left-hand valance (see Fig. U15).
1. Unscrew the four screws retaining the access cover, lift off the cover and withdraw the filter element from the top of the canister.

When fitting a new element, ensure that it is correctly positioned inside the retaining rim of the canister. Fit the access cover and tighten the setscrews.

Fuel tank (see Fig. U16)
The fuel tank is fitted at the forward end of the luggage compartment behind the carpet covered sealing panel (see Fig. U17).

The fuel tank is vented via two connections to the filler neck which allows adequate venting of the tank when it is being filled.

A separate vapour line from the fuel tank passes via a rollover valve (situated on the top of the fuel tank), under the floor on the left-hand side of the car to the evaporation loss control canister.

The rollover valve prevents fuel from entering the evaporation emission control canister during harsh manoeuvres or in the event of vehicle inversion. Fuel vapour passes freely through the valve.

In the event of a blockage in the vapour line to the evaporation loss control canister, a combined pressure and vacuum relief valve in the fuel filler cap prevents any excessive build-up of pressure due to fuel vapourisation or depression as the fuel is consumed.

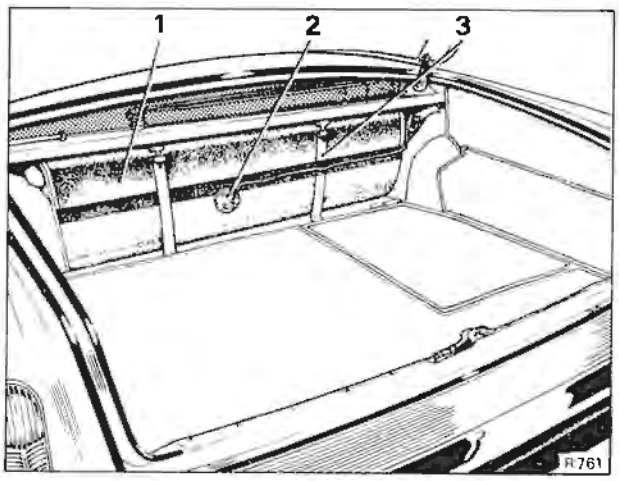

Fig. U17 Position of fuel tank
1 Fuel tank
2 Gauge unit
3 Retaining strap

Printed in England
© Rolls-Royce Motors Limited 1977
January 1977
T.S.D. 4200
(USA & Canada)

An expansion tank situated within the main fuel tank inhibits complete filling and thereby provides fuel expansion volume to cope with extreme temperature conditions

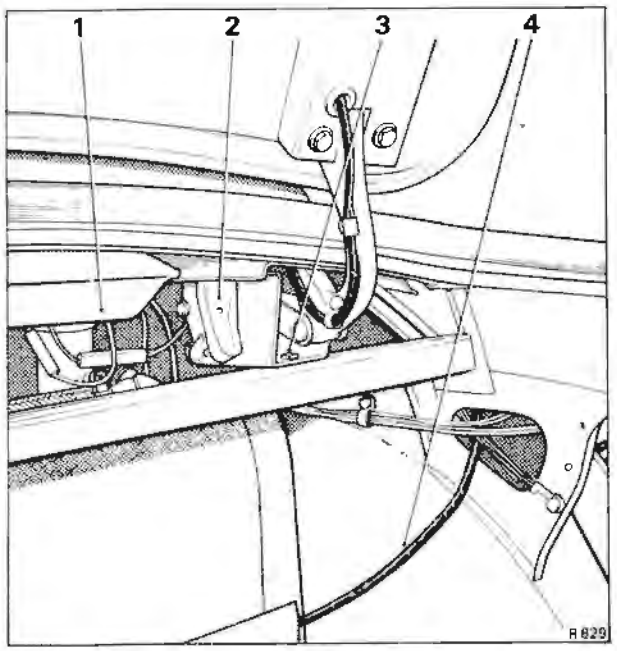

Fig. U18 Luggage compartment lid hinge assembly
1 Interior ventilation duct
2 Hinge assembly
3 Crossmember retaining bolt
4 Gauge unit loom

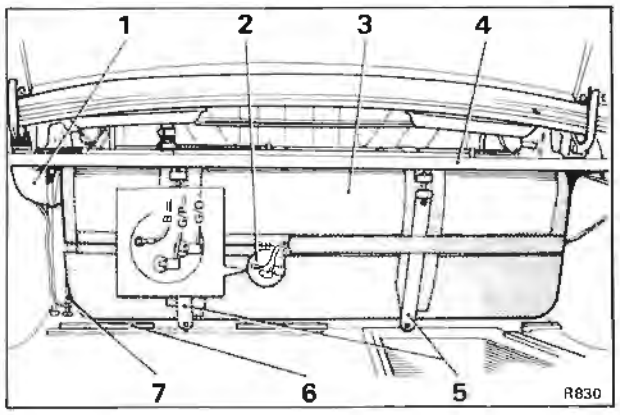

Fig. U19 Fuel tank fittings
1 Fuel filler hose
2 Gauge unit
3 Soundproofing panel
4 Crossmember
5 Securing straps
6 Carpet runner slots
7 Metal pipe (to evaporation loss control canister)

Fuel tank - To remove

1. Disconnect the battery.

2. Drain the fuel from the tank; this is best achieved by disconnecting the fuel pipe from the tank to the filter at the filter end.

Fit the fuel pipe to the fuel filter.

3. Unscrew the four 'Pozidrive' screws situated across the carpet covered sealing panel. Remove the screws and collect the washers.

4. Withdraw the carpet covered sealing panel to reveal the fuel tank assembly.

5. Unscrew the worm drive clip securing the roll-over valve assembly to the crossmember. Detach the rollover valve from the crossmember.

6. Remove the crossmember (see Figs. U18 and U19); this is secured by a 7/16 in. A/F nut, bolt and washer to the bottom of each luggage compartment lid hinge assembly.

7. Disconnect the three electrical cables from the fuel tank level gauge (see Fig. U19).

8. Remove the tape from the electrical loom by peeling it back from the fuel tank. Tape the electrical loom away from the vacinity of the fuel tank.

9. Unscrew the worm drive clips securing the three rubber vent hoses to their respective connections on the fuel tank (see Fig. U20); withdraw the hoses.

10. Unscrew the worm drive clip securing the rubber filler neck hose to the fuel tank (see Fig. U19); withdraw the hose.

Blank off the fuel tank connection.

11. From beneath the car, unscrew and detach the fuel pipes. Each connection is an olive and threaded union. Label the pipes to facilitate assembly

Blank off the fuel tank connections.

12. Unlock and unscrew the half-nut from each of the two tank retaining strap bolts (see Fig. U20).

13. Unscrew the full nut from each of the two tank retaining strap bolts (see Fig. U20).

14. Withdraw the bolts and collect the four bridge pieces from the end of the retaining straps (see Fig. U20).

15. Bend the retaining straps and carefully withdraw the fuel tank assembly.

Fuel tank - To fit

1. Sweep clean the forward end of the luggage compartment, between the road spring pots.

If blanking plugs, nuts, washers, etc., remain in this area when the fuel tank is fitted, they could become the cause of noise which may prove difficult to eradicate once the fuel tank is in position.

Also, ensure that the battery is disconnected and the usual standard workshop precautions carried out.

2. Ensure that the self-tapping screws that secure the pipe retaining clips beneath the car do not protrude to far into the luggage compartment. Extra long self-tapping screws could puncture the fuel tank.

3. Position the strips of 'Compriband' in position. Also fit the 'Compriband' pad around the hole in the luggage compartment floor.

The 'Compriband' and the two rubber blocks [that fit approximately 5,08 cm. (2.0 in.) above the luggage compartment floor on the panel dividing the compartment from the car interior] should be secured in position using an appropriate adhesive such as 'Dunlop S81'.

The position of all mounting strips are shown in Figure U21.

4. Fit the four fuel tank securing straps to the body (see Fig. U21). The two upper mountings are similar and are shown in Figure U21 - inset A. The two lower mountings are different, the left-hand mounting is shown in Figure U21 - inset B, where the bolt passes through the body and is retained by a nut. The right-hand mount is shown in Figure U21 - inset C, where the bolt has a distance piece and screws directly into a threaded bush attached to the body.

5. Fit the 4,8 mm. (3/16 in.) internal diameter rubber hose to the metal pipe situated on the left-hand side of the luggage compartment, adjacent to the panel dividing the luggage compartment from the car interior (see Fig. U19).

Temporarily attach the open end of the rubber hose high in the luggage compartment so that it will be above the fuel tank.

6. Fit the soundproofing panel to the fuel tank and secure in position with tape (see Fig. U19). In addition, fit two pieces of tape around the fuel tank so that the securing straps will sit on the tape when the tank is secured in position (see Fig. U19).

7. Bend the securing straps to enable the fuel tank to be fitted.

8. Fit the fuel tank into position, ensuring that the boss on the base of the tank fits into the hole in the luggage compartment floor.

9. Secure the fuel tank in position as follows (see Fig. U19).

10. Fit a bridge piece to the end of each securing strap and secure the fuel tank in position by fitting a long 7/16 in. A/F bolt, downwards, through the upper and lower securing strap bridge pieces. Screw a full nut onto the bolt.

11. Repeat Operation 10 to the second set of securing straps.

12. Tighten the full nut of each set of securing straps and lock in position by fitting an additional half nut to each of the two bolts.

13. From beneath the car fit the fuel pipes to the fuel tank, each connection is provided by an olive and a threaded union.

14. Fit the rubber intake pipe to the fuel tank neck and secure the end of the hose with a worm drive clip.

15. Fit the two 8,0 mm. (5/16 in.) internal diameter rubber hoses of the fuel intake assembly to the fuel tank vents. One hose connects directly to the vent, whilst the second hose, connects to the vent on the other side of the fuel tank via a metal pipe which is fitted across the top of the tank (see Fig. U20).

Secure the ends of the hoses with worm drive clips.

16. Fit the open end of the 4,8 mm. (3/16 in.) diameter hose referred to in Operation 5 to the top of the rollover valve assembly. Fit an 8,0 mm. (5/16 in.) internal diameter hose between the centre vent in the top of the fuel tank and the bottom connection of the rollover valve (see Fig. U20).

Secure the ends of the hose with worm drive clips.

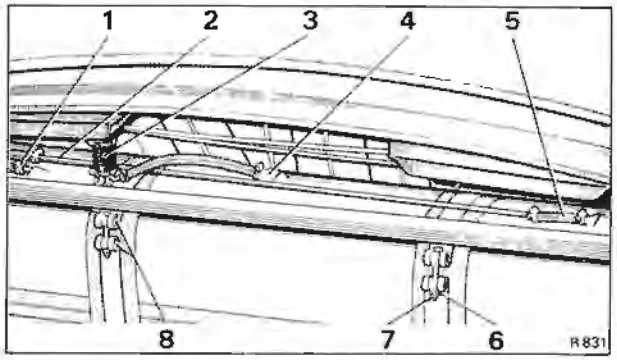

Fig. U20 Fuel tank vent connections

1 Vent-filler neck
2 Fuel tank vent metal pipe
3 Rollover valve
4 Vent-rollover valve
5 Vent-filler neck
6 Full nut
7 Half nut (lock-nut)
8 Bridge pieces

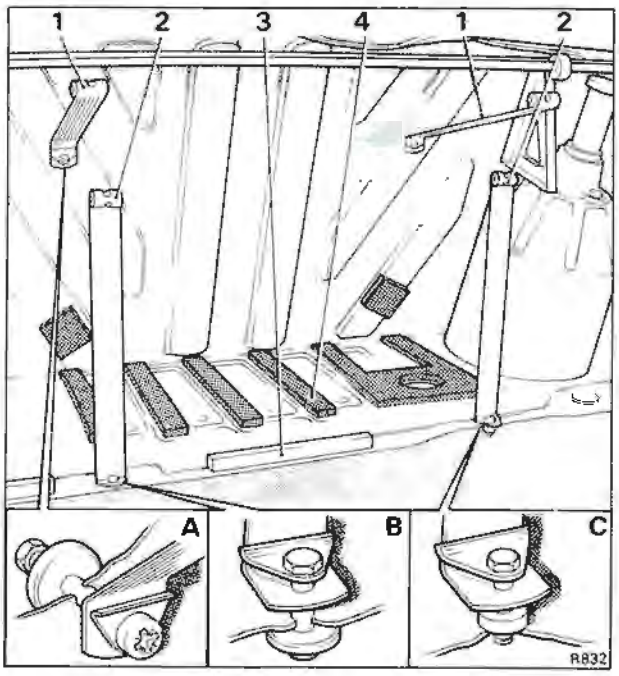

Fig. U21 Luggage compartment - Fuel tank fittings

1 Upper securing straps
2 Lower securing straps
3 Carpet runner slots
4 'Compriband' rubber

Printed in England
© Rolls-Royce Motors Limited 1977
January 1977
T.S.D. 4200
(USA & Canada)

17. Fit the crossmember (see Fig. U19), attaching it to the bottom bracket of each of the two luggage compartment lid hinge assemblies with a 7/16 in. A/F bolt, washer and nut (see Fig. U18).
18. Locate the fuel gauge sender unit electrical loom situated above the right-hand rear wheel arch; there are three cables in the loom and these are coloured black, green/orange and green/purple.

Tape the cables across the fuel tank until they are adjacent to the fuel gauge sender unit, as shown in Figure U19.
19. Connect the cables to the fuel gauge sender unit as shown in the inset of Figure U19.
20. Locate the base of the carpet covered panel into the wooden runner slots (see Fig. U19) and secure the top of the panel with four 'Pozidrive' screws and washers to the crossmember.
21. Connect the battery.

Fuel filler - To remove (Saloon cars)
1. Disconnect the battery.
2. Unscrew and remove the four 'Pozidrive' screws situated across the carpet covered sealing panel at the forward end of the luggage compartment.
3. Withdraw the carpet covered sealing panel to reveal the fuel tank assembly.

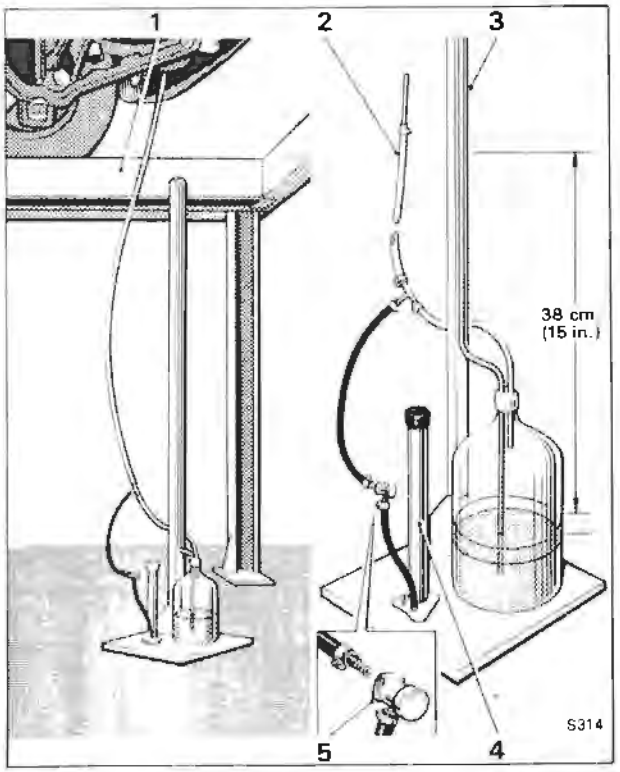

Fig. U22 Leak check test equipment
1 Ramp
2 Connection to fuel tank/canister hose
3 Test equipment
4 Pump
5 One way pressure valve

4. Unscrew the worm drive clips securing the two 8,0 mm. (5/16 in.) internal diameter rubber hoses to the two outer vents on the top of the fuel tank, one hose fits directly onto a vent while the other hose fits to a metal pipe which extends across the width of the fuel tank; withdraw the hoses.
5. Unscrew the worm drive clip securing the fuel inlet hose to the fuel tank; withdraw the hose and blank off the fuel tank inlet.
6. From inside the car remove the trim panel that covers the filler assembly, this is situated adjacent to the rear window.

On four door saloons (except Long Wheelbase Saloons with the small rear window) unscrew the two screws from the wood finisher fitted around the rear window. Carefully withdraw the trim panel to reveal the upper connection for the fuel filler.
7. Unscrew the worm drive clip securing the fuel filler hose to the fuel filler head. Withdraw the fuel filler neck assembly downwards into the luggage compartment.
8. Open the fuel filler flap; unscrew and remove the fuel filler cap.
9. Using a screwdriver, unscrew and remove the six screws securing the fuel filler head to the body, collect the washers from the retaining screws and withdraw the fuel filler head assembly.

Fuel filler - To fit (Saloon cars)
Fit the fuel filler assembly by reversing the procedure given for removal, noting the following.
1. When fitting the fuel filler head to the body ensure that the restrictor is in its lowest position.

Fuel filler - To remove (Convertible cars)
1. Remove the carpet covered sealing panel from the forward end of the luggage compartment.
2. Locate the fuel filler neck assembly situated on the left-hand side of the fuel tank.
3. Disconnect the two rubber hoses from the outer vents on top of the fuel tank.
4. Unscrew the upper and lower worm drive clips from the fuel filler neck assembly, withdraw the assembly and blank off the fuel tank.
5. Open the fuel filler flap and unscrew the fuel filler cap.
6. Using a screwdriver, unscrew and remove the six screws securing the fuel filler head to the body, collect the washers from beneath the heads of the screws. Withdraw the assembly.

Fuel filler - To fit (Convertible cars)
Fit the fuel filler assembly by reversing the procedure given for removal.

Fuel evaporation emission control system - To leak check
Whenever the various pipes, hoses and components of the fuel evaporation emission control system are disturbed, the system should be checked for air leaks upon assembly.

To test the system proceed as follows.
1. Position the vehicle on a ramp and carry out the usual safety precautions (i.e. ensure that the gear range selector lever is in 'Park' position, the parking brake firmly applied, the engine switched off, etc.,). Raise the ramp.
2. Remove the left-hand horn assembly (left-hand is decided when standing under the vehicle, looking towards the front), see Chapter M.
3. Through the resultant gap between the front wing and wing sheet, locate the emission control canister and identify the hose connection from the fuel tank (second from the bottom)
4. Using the special pliers (RH 8090), remove the steel retaining clip from the fuel tank connection hose at the control canister
5. The fuel tank hose should be detached from the canister and connected to the test equipment (see Fig U22).
6. Apply air pressure to the fuel tank hose via the test equipment until a reading of 38 cm. (15 in.) H_2O is attained and close the pressure supply.
7. After 5 minutes again check the pressure reading, this should not have fallen by more than 12,7 mm. (0.5 in.).
8. If the pressure drop is more than 12,7 mm. (0.5 in.), progressively treat all joints in the system with soap solution to detect air leaks.
9. Rectify any air leaks and again leak check the system.
10. When the system is satisfactory, detach the test equipment and connect the hose to the control canister, secure with a new steel retaining clip.
11. Fit the left-hand horn assembly as described in Chapter M.

Purge line

The purge line consists of a rubber hose, passing from the lowest connection on the canister through the valance junction piece to the induction manifold connection on the opposite side of the engine (see Fig. U13). Incorporated into this hose is the purge line filter and restrictor.

When the engine is running, air drawn through the canister filter and carbon picks up the stored fuel vapours and passes them via the hoses, to the induction system at a point just below the choke housing. The restrictor in the line controls the flow rate at between 1,41 cu.m. per hr. and 1,98 cu.m. per hr. (50 cu.ft. per hr. and 70 cu.ft per hr.) to maintain carburetter metering accuracy and the paper element line filter is fitted to prevent blockage of the restrictor.

Purge line filter

The purge line filter is situated on the left-hand valance just forward of the front road spring pot (see Fig. U15). The air filter assembly is a sealed unit and no attempt should be made to clean the element.

At the mileage intervals specified in the Service Schedules the purge line filter should be removed and a new assembly fitted as follows.

Purge line filter - To remove

1. Using the special pliers (RH 8090) remove the two steel retaining clips situated one on either side of the filter assembly.
2. Detach the inlet and outlet hoses.
3. Slacken the small setscrew that secures the clamp bracket around the filter assembly.
4. Swivel the clamp bracket to enable the filter assembly to be withdrawn.

Purge line filter - To fit

Fit the purge line filter by reversing the procedure given for removal, noting the following points.
1. Ensure that the filter assembly is fitted the correct way around; the word 'IN' moulded into the end of the casing should be towards the front of the vehicle.
2. Ensure that the rubber hoses are in a good condition and that new hose retaining clips are used.

Purge line restrictor

The purge line restrictor is situated in the purge line between the air filter and the induction manifold connection (see Fig. U13). The function of the restrictor is to maintain the air flow through the purge line within predetermined limits.

Purge line restrictor - To remove

1. Hold the restrictor firmly and slide the rubber hosing from both ends

Purge line restrictor - To fit

Fit the restrictor by reversing the procedure given for removal, noting the following point.
1. Ensure that the purge line restrictor is fitted into the line correctly. This can be determined by comparing the diameters of the restrictor ends with those of the rubber hoses.

Purge flow rate - To check

1. Disconnect the hose from the engine side of the purge line filter and insert a flowmeter assembly (RH 8725) into the line between the filter and the restrictor. The flowmeter is a rotameter type capable of measuring between 1,4 cu.m./hr. and 2,0 cu.m./hr. (50 cu.ft./hr. and 70 cu.ft./hr.). The pressure drop across the meter must not exceed 5,08 cm.Hg. (2.0 in.Hg.).
2. Start and run the engine at 600 r.p.m.; the reading on the flowmeter should be between 1,41 cu.m /hr. and 1,99 cu.m /hr. (50 cu.ft /hr. and 70 cu.ft /hr.).
3. If the flow is less than the minimum figure quoted in Operation 2, stop the engine and substitute the purge line restrictor with a straight piece of metal pipe having an internal diameter larger than 4,76 mm. (0.187 in.).

Printed in England

© Rolls-Royce Motors Limited 1977

January 1977

T.S.D. 4200
(USA & Canada)

4. Start and run the engine at 600 r.p.m.; the reading on the flowmeter should be in excess of 1,99 cu.m /hr. (70 cu.ft /hr.).
5a. If the flowmeter reading is above 1,99 cu.m /hr. (70 cu.ft /hr.) fit a new purge line restrictor and repeat Operation 2
b. If the flowmeter reading is below 1,99 cu.m/hr. (70 cu.ft/hr.) the cause could be as follows.
(i) An air leak in any of the vacuum hoses that connect to the induction manifold connection (vacuum manifold).
(ii) A blockage in the vacuum manifold or any of the connecting hoses.

Any leaks or blockages should be rectified; the restrictor should be fitted and Operation 2 repeated. If the flow rate is still incorrect fit a new restrictor and again, repeat Operation 2.
6. Remove the test equipment and connect the hose to the purge line filter.

Weakening device

The mixture weakening device (see Fig. U23) is fitted adjacent to 'B' bank carburetter and incorporates a fuel receiver.

For any given position of the fuel metering needle, the rate of the discharge from the carburetters is governed by the difference in air pressure existing over the fuel in the float chamber and that over the jet.

The weakening device is designed to reduce the air pressure (create a depression) in the float chamber at part throttle, thereby reducing the rate of discharge from the jet.

The weakening device housing contains two chambers, (see Fig. U24), the venturi chamber, and the fuel receiver chamber, the two being interconnected by a passage and an adjustable venturi.

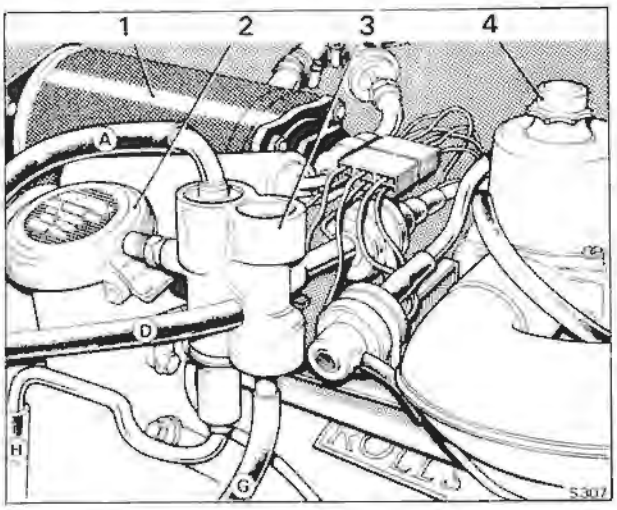

Fig. U23 Position of mixture weakening device
1 Refrigeration compressor
2 Engine oil filler
3 Mixture weakening device
4 'B' bank carburetter

The venturi chamber is connected to a small drilling on the edge of the butterfly plates of both carburetters via the weakening device solenoid valve, with the throttle slightly open the drillings are subjected to manifold depression thus creating a depression in the venturi chamber which draws air from the weakening device air filter. This depression is also apparent in the fuel receiver chamber and subsequently in the carburetter float chambers.

The value of the depression is set by the position of the weakening device adjusting screw.

To obtain adequate float chamber venting to cope with hot soak conditions there is an additional vent from the fuel receiver. This incorporates a low pressure non-return valve to maintain float chamber depression under normal running conditions. In addition to this valve, a one-way valve is fitted into the venturi chamber to prevent any evaporating fuel being discharged to atmosphere.

A float chamber drain, also incorporating a low pressure non-return valve is mounted at the front of the engine adjacent to the oil filter, this valve is connected to the fuel receiver. Should flooding occur the head of fuel in the receiver is sufficient to open the drain valve thus preventing engine stalling if the float chamber needle valves stick.

Weakening device - To remove

1. Label all hoses connected to the weakening device assembly, this will facilitate assembly.
2. Disconnect all hoses to the weakening device.
3. Unscrew and remove the two small setscrews that retain the weakening device to the solenoid platform; the two screws are situated just below the pipe/hose connections for the anti 'run-on' solenoid and weakening device cut-off solenoid.
4. Withdraw the weakening device.

Weakening device - To fit

Fit the weakening device by reversing the procedure given for removal, noting the following point.
1. Ensure that all hoses connecting to the assembly are in a good condition and that all connections are 'air tight'.

Weakening device - To dismantle (see Fig. U24)

1. Remove the weakening device from the vehicle.
2. Remove the small screw that secures the **fuel receiver assembly** into the base of the weakening device, withdraw the assembly.
3. Unscrew the **weakening device signal cap**, collect the cap fibre washer. Unscrew the **signal line adapter** from the casting and withdraw the aluminium washer from the adapter.
4. Remove the circlip from the top of the fuel receiver chamber, withdraw the **float chamber vent pipe** (slight resistance may be felt due to the rubber sealing ring). With a soft drift (e.g. wooden pencil), push the float chamber vent valve out of the weakaning device assembly

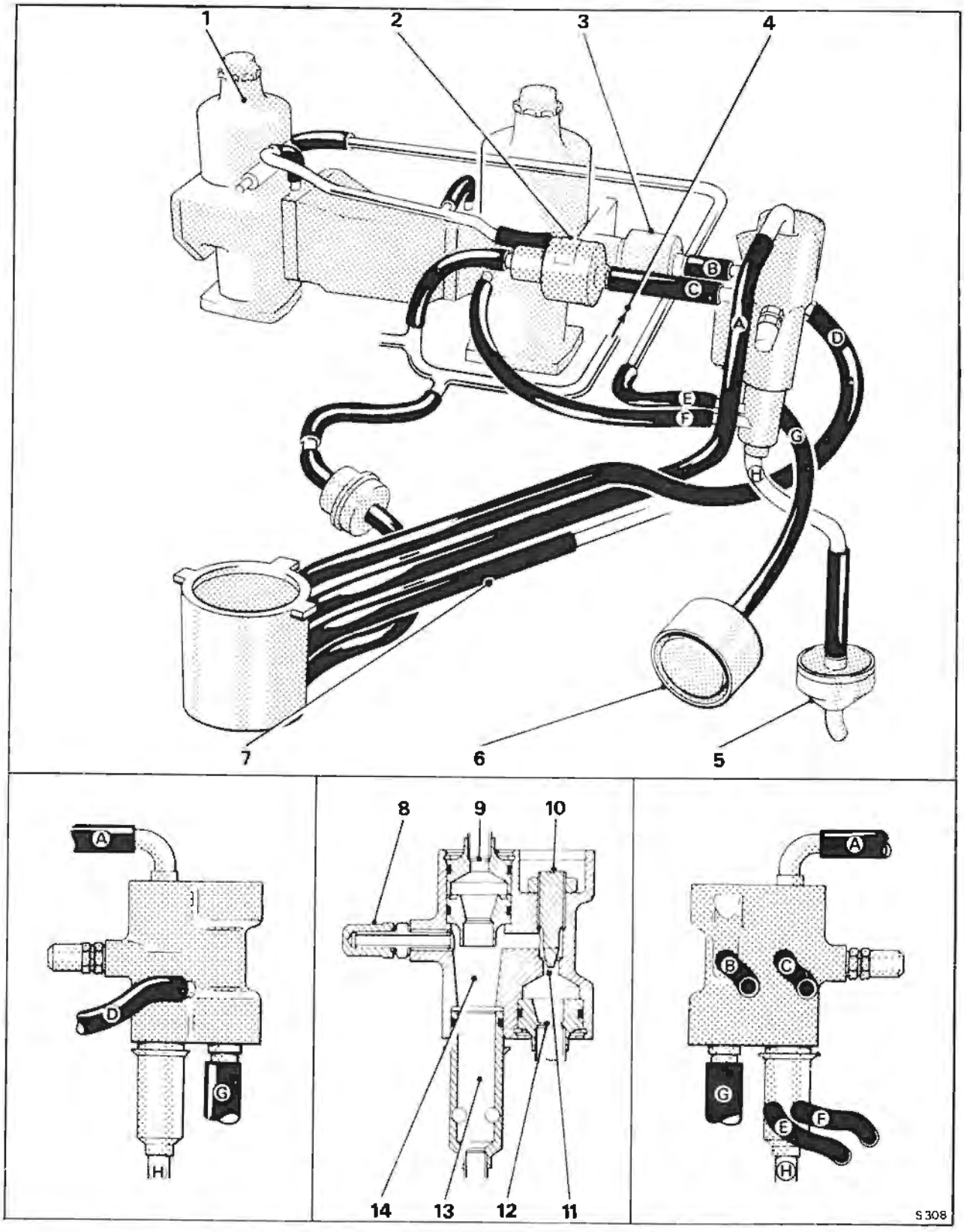

Fig. U24 Mixture weakening device

1 'A' bank carburetter
2 Anti 'run-on' solenoid
3 Weakening device cut-off solenoid
4 Induction manifold connection
5 Float chamber drain valve
6 Weakening system air filter
7 Vent from fuel tank
8 Weakening device signal cap
9 Float chamber vent valve
10 Adjusting screw
11 Venturi chamber
12 Air intake valve
13 Fuel receiver
14 Fuel receiver chamber

Printed in England

© Rolls-Royce Motors Limited 1977

January 1977

T.S.D. 4200
(USA & Canada)

(the drift is required because the rubber sealing ring fitted around the vent valve will cause a small resistance).
5. Remove the circlip from the base of the venturi chamber, withdraw the **air intake pipe** containing a one-way valve (slight resistance may be felt due to the rubber sealing ring).
6. Remove the **anti-tamper cover** from the top of the venturi chamber, unscrew the lock-nut and using a screwdriver unscrew the **adjusting screw.**

Weakening device - To assemble
To assemble the weakening device, reverse the procedure given for removal, noting the following.
1. Ensure that all components are clean before assembly.
2. Ensure that the rubber sealing rings are in a good condition and lightly smeared with the minimum amount of grease. Ensure that no grease is applied to the valves otherwise a malfunction may occur due to the grease making the valves stick.
3. After assembly, the operator should check that he can blow but not suck on the metal pipes, one on top of the fuel receiver chamber and the other at the bottom of the venturi chamber.

Weakening device signal strength - To check
The **float chamber depression** should be checked as follows.
1. Start and run the engine until normal setting conditions are attained (i.e. engine cooling system thermostat opened, air conditioning unit switched off, and the automatic choke is off).
2. Stop the engine.
3. Connect an electric impulse tachometer to the engine in accordance with the manufacturer's instructions.
4. Disconnect the E.G.R. cut-off solenoid to carburetter signal pipe hose at the solenoid and blank off the hose.
5. Unscrew and remove the weakening device signal cap and connect a 0 to 15,5 cm. (0 to 6 in.) water manometer to the weakening device adapter.
6. Start and run the engine at 2 000 r.p.m. in 'Park' until a steady manometer reading is obtained, this should be 5,08 cm. (2.0 in.) of water depression.

A low or zero reading may be caused by
a. A blockage in the weakening device venturi to the weakening device cut-off solenoid.
b. A blockage or restriction in the signal pipe(s).
c. An air leak in the hoses or pipes from the float chambers to the emission control canister.
d. Faulty float chamber vent valve or drain valve.
e. Low engine temperature [below 14° C.(57° F.)] a faulty weakening device solenoid or weakening device switch.

A high reading may be caused by
a. An obstruction in the weakening device bleed orifice (weakening device signal strength adjusting screw).
b. Obstructed weakening device air filter or evaporation loss control canister.
c. Incorrect connection or blockage in the weakening device to either the valance connection or the evaporation loss control canister.
d. Weakening device air intake valve sticking closed.
e. Obstructed weakening device air filter hose.
f. Incorrect operation of anti 'run-on' solenoid.
7. If the float chamber depression is still incorrect after checking through the possible causes in Operation 6, set the weakening device signal strength (float chamber depression) by unlocking and turning the adjusting screw (see Fig. U24) until the correct manometer reading is obtained. Turning the adjusting screw clockwise increases the depression.
8. Remove the blank from the E.G.R. cut-off solenoid to signal pipe hose and connect the hose to the solenoid.
9. Raise the engine speed slowly noting both the manometer and tachometer readings. The maximum steady manometer reading should be obtained between 1 200 r.p.m. and 1 500 r.p.m.
10. Allow the engine speed to return to the idle setting (650 r.p.m.) and check the float chamber depression reading on the manometer.
If the float chamber depression at idle speed is above 10.16 mm.H_2O (0.4 in. H_2O) check the ignition timing at idle as this condition may result in unsatisfactory driveability.
11. Fit the tamperproof cover into the top of the venturi chamber.

Weakening device air filter - To remove
The air filter container is mounted on the left-hand valance just forward of the road spring pot (see Fig. U15).
This is a sealed unit and no attempt should be made to clean the element.
1. To remove the air filter assembly, detach the hose and unscrew the worm drive clip situated around the assembly.
2. Withdraw the assembly.

Weakening device air filter - To fit
Fit the air filter container by reversing the procedure given for removal.

Section U4

Crankcase emission control system

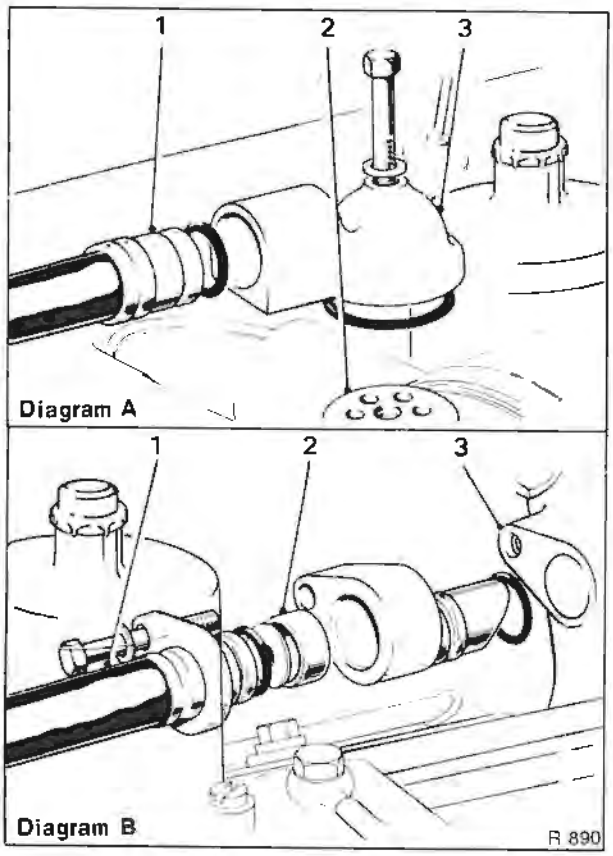

Fig. U25 Crankcase breather pipe connections

Diagram A		Diagram B	
1	Breather tube	1	Breather tube
2	Choke housing	2	Flame trap
3	Breather connection	3	Oil filler housing

Crankcase emissions are controlled by a recirculatory closed breather system.

An insulated draught tube connects the crankcase via the oil filler which is fitted with a sealed cap, to the choke housing upstream of both the choke butterfly and the carburetters. A flame trap capsule containing three wire mesh discs is fitted in a housing at the crankcase end of the draught tube. Engine emission (blow-by) is drawn into the induction system via the draught tube, due to the depression in the choke housing.

1. The flame trap fitted to the breather pipe should be cleaned in the following manner, at the specified mileage.
2. Unscrew the setscrew securing the breather pipe connection to the oil filler pedestal; withdraw the connection from the pedestal (slight resistance may be felt due to the rubber 'O' ring connections).
3. Withdraw the connection from the pipe flange and collect the restrictor.
4. Wash the flame trap assembly in clean petrol, then dry with a high pressure air line. The flame trap assembly consists of 3 gauzes crimped together as shown in Figure U25.
5. To clean the adapter fitted to the choke housing, remove the single setscrew from the breather pipe end connection and detach the pipe.
6. Clean the adapter fitted to the choke housing and ensure that the holes in the adapter are clear.
7. Assembly of the flame trap and breather pipe is in the reverse order, ensuring that the 'O' rings are in good condition.

Printed in England

© Rolls-Royce Motors Limited 1977

January 1977

T.S.D. 4200
(USA & Canada)

Printed in England
© Rolls-Royce Motors Limited 1977
January 1977
T.S.D. 4200
(USA & Canada)

Section U5

Carburetters and Automatic choke system

The Carburetter and Automatic Choke System can be seen illustrated in Figure U26 and comprises the following main components.

Automatic choke
'Fast-idle'
Stove pipe
(For the remainder of the Automatic Choke System refer to Chapter K).

Carburetters (see Fig. U28)
Bi-metal jet lever
Carburetter fuel filter
Carburetter idle airflow balance
Float
Float chamber
Float needle
Jet assembly
Jet needle
Overrun valve
Piston
Piston damper
Piston damper retainer (Piston ball race clip)
Suction chamber
Tamperproof caps
Throttle disc
Throttle linkage
Viscosity compensator

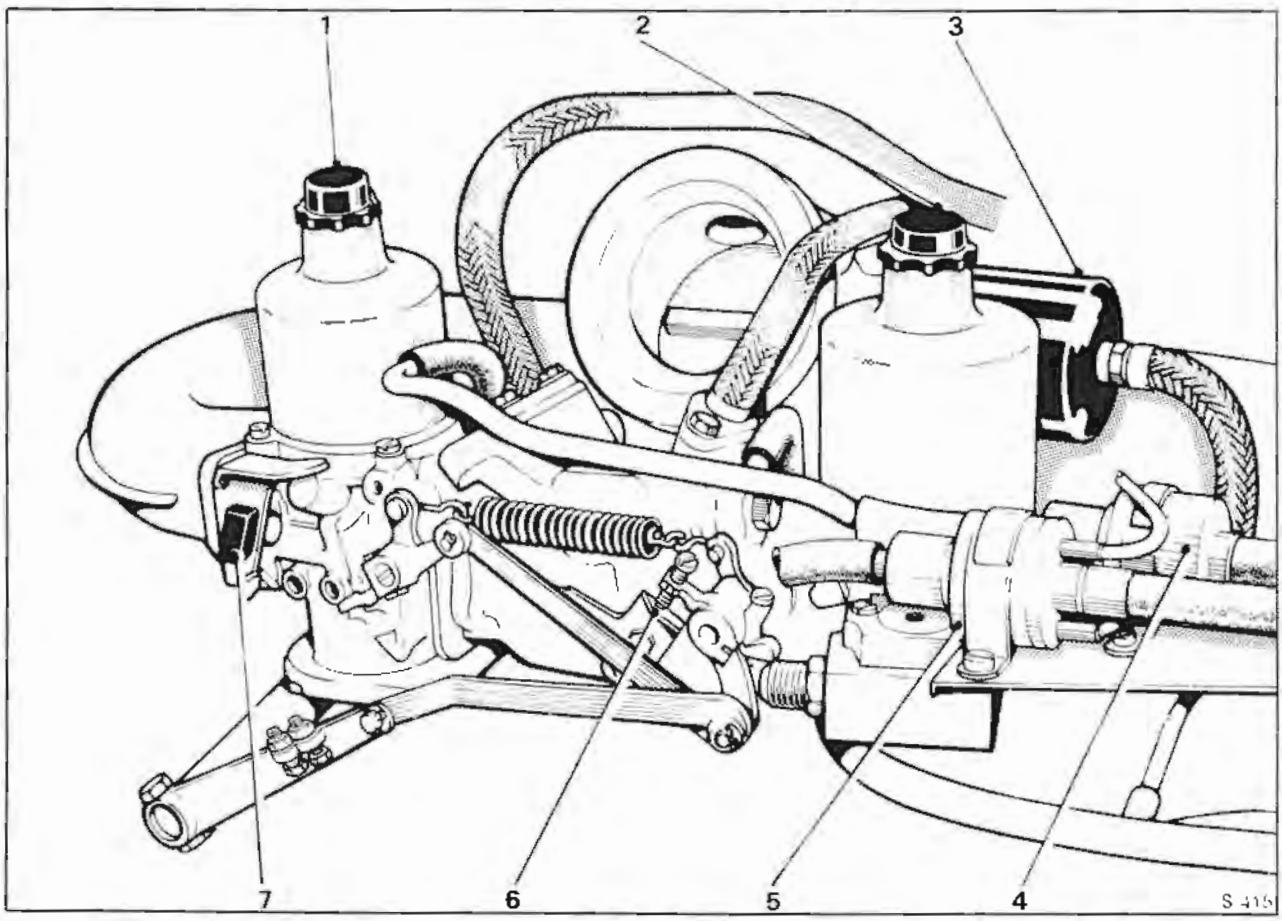

Fig. U26 Carburetters and linkage

1 'A' bank carburetter
2 'B' bank carburetter
3 Choke bi-metal housing
4 Weakening system cut-off solenoid
5 Anti 'run-on' solenoid
6 Idle speed adjusting screw
7 E.G.R. full throttle cut-out micro-switch

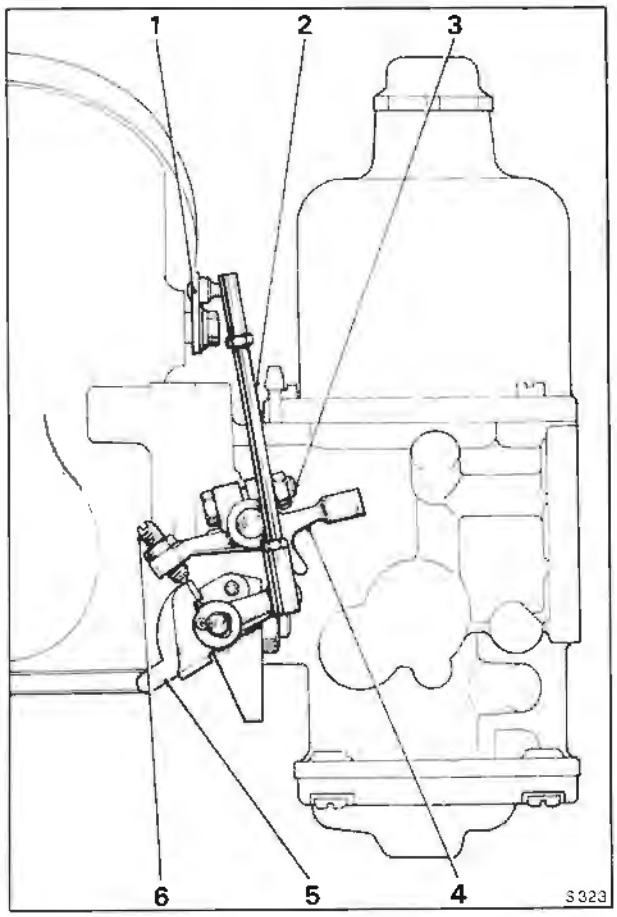

Fig. U27 Fast-idle mechanism
1 Control rod lever
2 Butterfly rod
3 Lever clamp bolt
4 'Fast-idle' lever
5 Cam
6 Adjusting screw

Temperature controlled air intake
Air cleaner/silencer
Air blend valve
Cold air intake
Hot air scoop
Manifold vacuum hose
Resonator
Temperature sensor

Weakening device
(Refer to Section U3).

Automatic choke
All details for the Automatic Choke System are given in Chapter K, except for the checking and setting procedures of the following.

'Fast-idle' - To set
1. Ensure that the usual safety precautions are carried out (i.e. parking brake firmly applied, gear range selector lever in 'Park' etc.) and connect an impulse tachometer in accordance with the manufacturer's instructions.
2. Disconnect the signal hose to the E.G.R. cut-off solenoid (not the hose from the solenoid to the E.G.R. valve), at the solenoid and blank the hose.
3. Remove the pressure tapping cap from the weakening device (see Fig. U24).
4. Open the throttles and close the choke butterfly against the bi-metal tension using control rod lever (item 1 - Fig. U27) until the adjusting screw (item 6 - Fig. U27) is resting on the tip of the fast-idle cam. At this point an extra load will be felt due to the action of the extended fast-idle plunger ceasing.
5. Start the engine, if the speed is outside a range of 850 r.p.m. to 900 r.p.m. stop the engine, open the throttles to gain access to the adjusting screw and turn the screw approximately ⅛ turn for each 20 r.p.m. required. Tighten the lock-nut.
6. Start the engine and again check the fast-idle speed.
7. When the engine speed has been adjusted to within the prescribed limits open the throttles to release the fast-idle mechanism.
8. Stop the engine, disconnect the tachometer, remove the blank from the E.G.R. signal hose to the cut-off solenoid and fit the hose to the solenoid. Fit the pressure tapping cap to the weakening device.

Choke stove pipe - To flow check
1. Ensure that the usual safety precautions are carried out (i.e. parking brake firmly applied, gear range selector lever in 'Park' etc.) and connect an impulse tachometer in accordance with the manufacturer's instructions.
2. Start and run the engine until normal operating temperature is attained. Stop the engine.
3. Disconnect the stove pipe union at the intake elbow (see Fig. U42) and connect a flowmeter to the pipe via a connector (RH 8945). The flowmeter must be a rotameter type capable of measuring 2,9 cu.m/hr. (100 cu.ft/hr.).
4. Start and run the engine at idle speed (650 r.p.m.); observe the flowmeter, a correct reading is between 1,41 cu.m/hr. and 1,55 cu.m/hr. (50 cu.ft/hr. and 55 cu.ft/hr.)
5. If the flow is less than 1,41 cu.m/hr. (50 cu.ft/hr.) check the choke stove pipe unions for leaks.
6. If the flow is in excess of 1,55 cu.m/hr. (55 cu.ft/hr.), fit a new restrictor in the choke bi-metal housing (see Chapter K).

Carburetters
Two S.U. HIF7 (Horizontal Integral Float Chamber) carburetters with 4,76 cm. (1.875 in.) choke bores (see Fig. U28) are fitted to the engine on a central 'tee' piece which is mounted over an eight branch induction manifold.

This type of carburetter automatically adjusts both its choke and jet area to meet the demand of the engine which is dependent on engine speed and

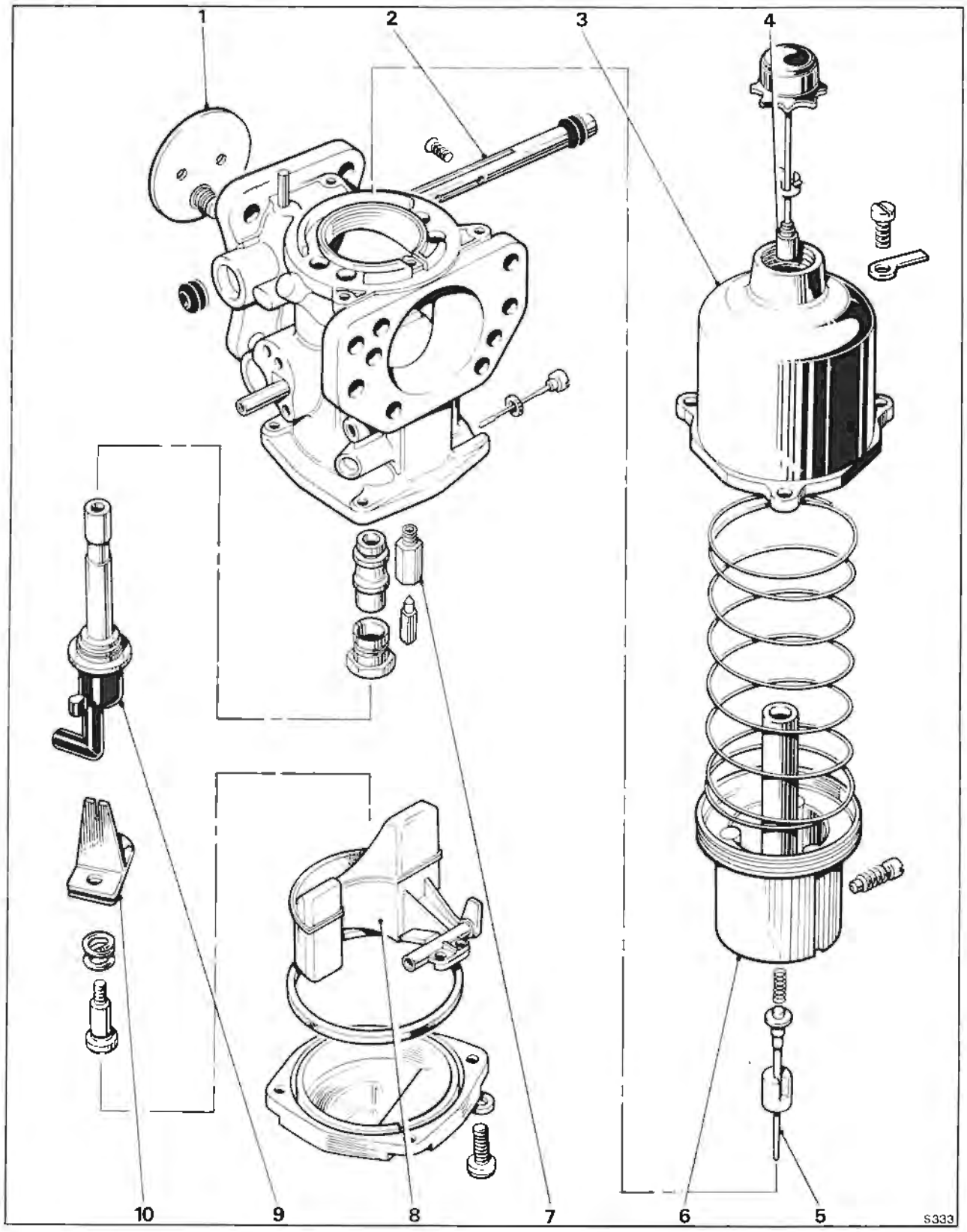

Fig. U28 SU HIF7 carburetter

1 Throttle disc with overrun valve
2 Throttle spindle
3 Suction chamber
4 Piston damper
5 Jet needle
6 Piston
7 Float needle valve assembly
8 Float
9 Jet assembly
10 Bi-metal jet lever

Printed in England
© Rolls-Royce Motors Limited 1977
January 1977
T.S.D. 4200
(USA & Canada)

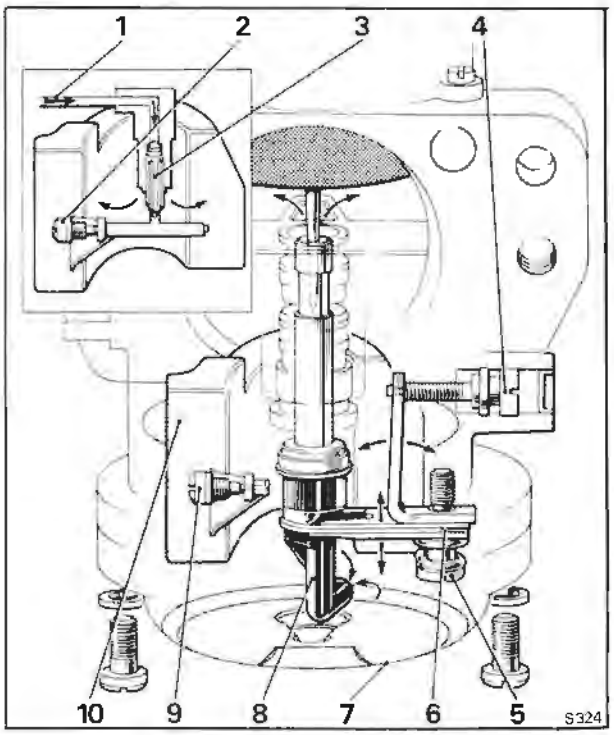

Fig. U29 Float chamber layout

1	Fuel inlet
2	Float fulcrum screw
3	Needle valve
4	Jet adjusting screw
5	Bi-metal pivot screw
6	Bi-metal assembly
7	Bottom cover-plate
8	Jet head
9	Float fulcrum screw
10	Concentric float

loading. As air is drawn through the carburetter, the piston acting as an obstruction will cause a depression to be formed in the area between the throttle and the piston. This depression is communicated by means of transfer holes in the base of the piston to the area above the piston, causing an upward force to be imposed on the piston. The piston will rise in response to this force relieving the depression in the area between the piston and the throttle as it does so until a point is reached where the force acting on the piston is balanced by the weight of the piston and the load exerted by the piston spring.

A spring-loaded jet needle is fitted to the carburetters, which is biased downstream and operates in a 2,54 mm. (0.10 in.) diameter main jet; this jet does not require centralising.

Float chamber (see Fig. U29)
The float chamber is incorporated in the main body casting, access to the chamber is obtained by removing the bottom cover-plate (item 7). The moulded float (item 10) is shaped so that it surrounds the jet tube and is pivoted along a line parallel to the inlet flange. The float is retained by a spindle (items 2 and 9) which screws into the body casting.

Entry of the fuel into the float chamber is via a brass tube (item 1) in the side of the carburettor body to a needle valve assembly (item 3).

The jet is pressed into the top of an aluminium tube which is in turn pressed into a plastic moulding (item 8). This hollow moulding known as the jet head is open at its lower end allowing fuel to enter the jet tube.

Mixture adjustment (see Fig. U29)
The jet tube of the HIF type carburetter is moved in the vertical plane to provide mixture adjustment.

The jet adjustment assembly is comprised of a right-angled adjusting lever of unequal length arms riveted to a bi-metal blade (item 6).

The blade is cut out to accept the jet head (item 8) and the shape of the jet head is formed so that any movement of the bi-metal blade is transmitted to the jet head, moving it in the vertical plane.

The right-angled adjusting lever and bi-metal blade (item 6) are attached to the body casting by a spring-loaded retaining screw (item 5) positioned in the short arm of the lever. This attachment allows the adjusting lever to be pivoted at the outer edge of its short arm and is loaded by the spring towards the jet adjusting screw (item 4).

The jet adjusting screw is located at the outer end of the long arm of the adjusting lever; screwing the adjusting screw inward will lower the jet, enriching the mixture and unscrewing the adjusting screw will allow the spring to return the lever together with the jet, weakening the mixture.

After the mixture has been set the jet adjustment can be sealed by fitting a plug into the jet adjusting screw recess of the carburetter body.

HIF7 carburetters are set and balanced by accurate flow measuring techniques during manufacture and therefore, adjustment of the mixture screws should not be necessary.

Fuel temperature compensation (Viscosity compensator) (see Fig. U29)
This device alters the jet position in relation to the metering needle to compensate for changes in fuel viscosity which take place with changes in fuel temperature.

When the fuel temperature rises, the viscosity is lowered, and in an uncompensated assembly this would allow more fuel to flow for a given jet / needle relationship.

In the HIF jet assembly the jet head is attached to a bi-metal blade (item 6). This bi-metal is immersed in the fuel in the float chamber and will move in the vertical plane in response to changes in fuel temperature. The jet will be raised to a weaker position on the jet needle when the fuel

temperature rises and will be lowered to a richer position when the temperature falls.

From this it will be seen that once the jet position has been selected by adjusting the mixture screw, alterations of fuel temperature will bring about slight alterations in jet position to compensate for the change in fuel viscosity.

The effect of this device is that drivability is improved over wide ranges of temperature, and that exhaust emissions can be kept within closer limits during cold starting and the warm-up period. Temperature compensation also allows carburetters to have the mixture setting pre-set and sealed before the car is delivered.

Overrun valves (see Fig. U30)

During overrun (i.e. when decelerating with the throttles closed), insufficient mixture is supplied to the engine to maintain satisfactory combustion. The overrun valves alleviate this condition by allowing some mixture to pass through the throttle plates (butterflies) at high inlet manifold depressions.

An overrun valve is fitted into the throttle plate of each carburetter.

An overrun valve consists of a small disc retained in each throttle plate by a spring loaded plunger. Under normal conditions the disc is seated against the throttle plate. When the throttle is suddenly closed, the increased inlet manifold depression lifts the disc from its seating and allows a metered quantity of air/fuel mixture to pass through the throttle plate.

The action of the overrun valves maintains satisfactory combustion on overrun, thus reducing hydrocarbon emissions and controlling catalyst temperatures.

After the sudden closure of the throttles and as soon as the manifold depression falls, the overrun valve disc returns to its seat on the throttle plate.

Spring-loaded jet needle (see Fig. U31)

The jet needle fitted to each carburetter is biased towards a predetermined position in the jet orifice by means of a spring-loaded fixing.

The shoulder of the needle abuts a protrusion formed on the needle guide. Under the pressure of a spring the needle is held permanently in one position relative to the air flow. As the needle is retained in a predetermined position no jet centring is required and a non-centreable jet bearing is fitted. To ensure correct fitting the needle guide carries an etched alignment mark which should be positioned mid-way between the two cut-outs in the piston.

Carburetter fuel filter

A filter element is fitted into the fuel filter housing attached to the side of each carburetter. At the intervals specified in the Service Schedules these two filter elements should be discarded and new ones fitted as described in Chapter K.

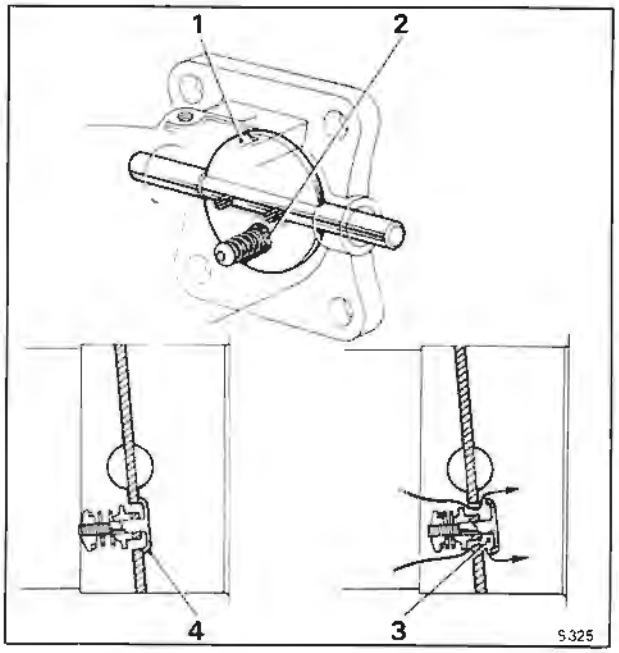

Fig. U30 Overrun valve
1 Throttle butterfly disc
2 Overrun valve
3 Overrun valve open
4 Overrun valve closed

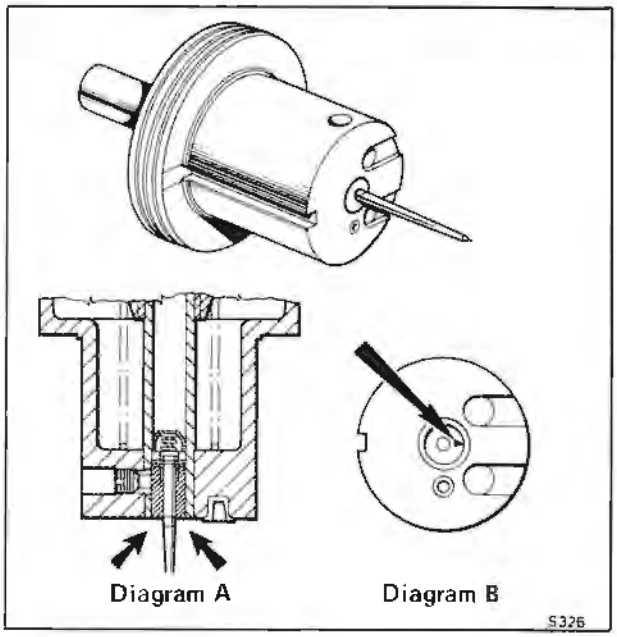

Fig. U31 Spring-loaded jet needle
Diagram A
Needle guide height setting
Diagram B
Needle guide alignment setting

Printed in England
© Rolls-Royce Motors Limited 1977
January 1977
T.S.D. 4200
(USA & Canada)

Carburetters and air horns assembly - To remove
Before commencing to remove the carburetters observe the following points.
1. When disconnecting the various hoses, pipes and wiring connections ensure that they are suitably labelled to assist identification when assembling.
2. Ensure that **all** open ends of pipes, hoses, etc. are suitably blanked off to prevent the ingress of dirt, etc.
3. Ensure that the usual safety precautions are carried out (i.e. parking brake firmly applied, gear range selector lever in Park, battery disconnected, etc.).

To remove the carburetter and air horn assembly proceed as follows
From 'A' bank side
1. Remove the air intake elbow casting (refer to Air intake - To remove in Chapter K).
2. Disconnect the fuel feed and recirculation pipes adjacent to 'A' bank carburetter.
3. Withdraw the 'Lucar' electrical connections from the E.G.R. full throttle cut-out micro-switch.
4. Withdraw the 'Lucar' electrical connections from the speed control unit. Disconnect the chain link from the throttle linkage to the speed control unit. Withdraw the vacuum hose from the speed control unit. Unscrew and remove the 'steady' bolt from the speed control bracket.
5. Remove the split pin, washer and clevis pin from the throttle linkage just forward of 'A' bank carburetter.

From 'B' bank side
6. Disconnect the E.G.R. feed pipe upper joint (refer to E.G.R. feed pipe - To remove, Section U2).
7. Unscrew the union on the choke stove pipe at the bi-metal housing.
8. Unscrew the fuel feed pipe union at 'B' bank carburetter filter housing.
9. Remove the crankcase emission control system pipe from the choke butterfly housing; withdraw the housing from the end of the pipe.
10. Disconnect the electrical cables to the choke solenoid at the 'snap connector' joints, adjacent to the butterfly housing.
11. Disconnect the 'Lucar' electrical connections to the anti run-on solenoid, E.G.R. cut-off solenoid and the weakening device cut-off solenoid.
12. Detach the following hoses from the weakening device.
a. the hose from the float chamber vent valve
b. the hose from the fuel receiver
c. the hose to the air filter
d. the hose from the venturi chamber
These hoses are labelled A, H, G and D in Figure U4.
13. Disconnect the purge line at the restrictor.
14. Unscrew the 7/16 in. A/F nut from the dipstick bracket; collect the washer.
15. Unscrew the ½ in. A/F setscrew from the centre of the carburetter 'tee' piece; withdraw the setscrew and washer.
16. Carefully withdraw the carburetters and air horn assembly, ensuring that no pipes, hoses or electrical items are still connected.

Carburetters and air horns assembly - To fit
Fit the carburetters by reversing the procedure given for their removal, noting the following points.
1. Ensure that all joint faces are clean.
2. Fit new gaskets.

Carburetters - To remove
Remove the carburetters and air horn assembly from the car (refer to Carburetters and air assembly - To remove) and then, remove the carburetters from the air horns assembly as follows.

'A' bank carburetter
1. Unscrew the two ½ in. A/F nuts securing the air horn to 'A' bank carburetter.
2. Withdraw the bolts, collect the washers and the E.G.R. full throttle cut-out micro-switch mounting bracket.
3. Move the air horn flange upwards away from the carburetter.
4. Unscrew the union from the fuel filter.
5. Detach the vacuum supply hose from on top of the carburetter body adjacent to the carburetter and 'tee' piece flange.
6. Detach the hose from the side of the carburetter that connects to the fuel receiver in the weakening device.
7. Completely remove the two pinch bolts securing the throttle levers to the 'A' and 'B' bank carburetter butterfly spindles, remove the levers.
8. Unscrew the nut and withdraw the pinch bolt securing the 'fast-idle' lever to the carburetter spindle; withdraw the lever.
9. Unscrew the four half-nuts that retain the carburetter to the 'tee' piece flange; collect the washers.
10. Withdraw the carburetter and collect the gasket.

'B' bank carburetter
1. With a screwdriver, unscrew and remove the two screws securing the solenoid platform in position adjacent to 'B' bank carburetter. One screw is located on the air horn and has a nut underneath, and the other screw is situated in the filter housing.
2. Unscrew the ½ in. A/F nuts from the bolts that retain the air horn to the carburetter flange; withdraw the bolts and collect the washers. Move the solenoid platform away from the carburetter.
3. Detach the hose from the side of the carburetter to the fuel receiver in the weakening device.
4. Carefully ease the air horn upwards away from the carburetter.

5. Completely remove the two pinch bolts securing the throttle levers to the 'A' and 'B' bank carburetter butterfly spindles remove the levers.
6. Detach the vacuum supply hose from on top of the carburetter body adjacent to the carburetter and 'tee' piece flange.
7. Unscrew the remaining union from the fuel filter housing.
8. Unscrew the four half-nuts that retain the carburetter to the 'tee' piece flange; collect the washers.
9. Withdraw the carburetter and collect the gasket.

Dismantling of the components within the carburetters is not recommended as all carburetters are set and balanced by accurate flow measuring techniques during manufacture.

In certain isolated instances however, it maybe necessary to dismantle the carburetters and under these conditions the following procedure should be carefully followed.

Carburetter - To dismantle
Upper half (see Fig. U32)
1. Thoroughly clean the outside of the carburetter.
2. Unscrew the suction chamber retaining screws and remove the identity tag.
3. Lift the chamber assembly vertically from the body without tilting it.
4. Hold the piston firmly and pull the suction chamber, taking care not to bend the damper rod, until the damper retainer is freed from the piston rod. Unscrew and remove the damper.
5. Remove the piston spring, lift out the piston assembly and empty the oil from the piston rod.
6. Note the position of the needle guide etch mark in relation to the piston transfer holes for correct reassembly and unscrew the needle guide locking screw.
7. Withdraw the needle, guide and spring.

Lower half (see Fig. U33)
8. Mark the bottom cover-plate and body to ensure correct reassembly, unscrew the retaining screws and remove the cover complete with the sealing ring.
9. Remove the jet adjusting screw complete with 'O' ring.
10. Remove the jet adjusting lever retaining screw and spring.
11. Withdraw the jet complete with adjusting lever and disengage the lever.
12. Remove the float pivot spindle and aluminium washer.
13. Withdraw the float.
14. Remove the needle valve and unscrew the valve seat.
15. Unscrew the jet bearing locking nut and withdraw the bearing complete with fibre washer.

Throttle disc assembly (see Fig. U34)
16. Remove the throttle disc retaining screws.
17. Close the throttle and mark the position of the throttle disc in relation to the carburetter flange. **Do not mark the disc in the vicinity of the overrun valve.** Open the throttle and carefully withdraw the disc from the throttle spindle taking care not to damage the overrun valve.
18. Withdraw the throttle spindle and remove the seals, noting the way it is fitted in relation to the carburetter body to ensure correct reassembly.

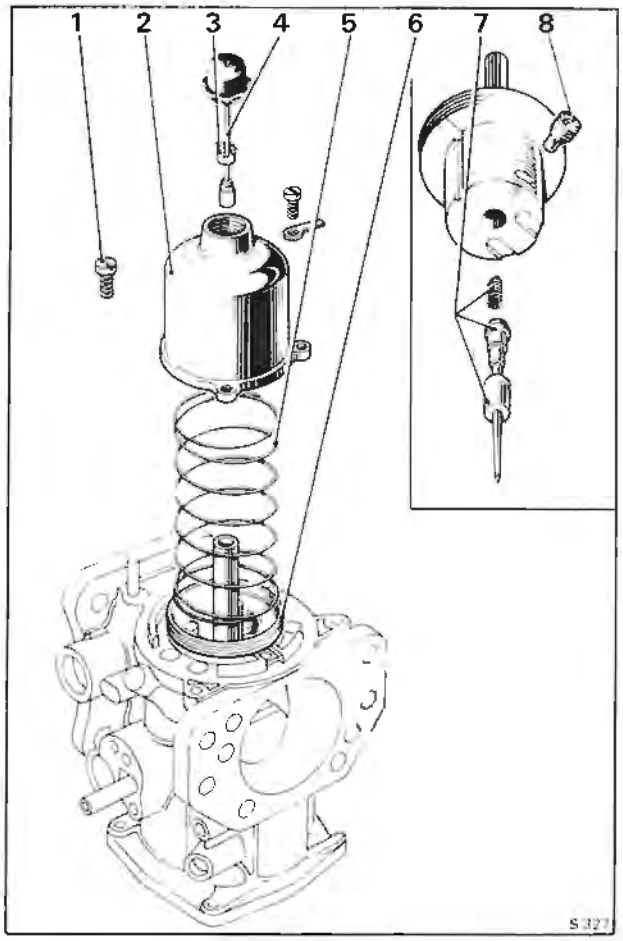

Fig. U32 Dismantling a carburetter (Upper half)
1 Suction chamber retaining screw
2 Suction chamber
3 Damper retainer (Piston ball race clip)
4 Damper rod
5 Spring
6 Piston
7 Spring-loaded needle assembly
8 Needle guide locking screw

Printed in England
© Rolls-Royce Motors Limited 1977
January 1977
T.S.D. 4200
(USA & Canada)

Carburetter - To inspect

1. Examine the throttle spindle and its bearings in the carburetter body; check for excessive play, and fit new parts if necessary.

2. Examine the float needle and seating for damage and excessive wear; fit new parts if necessary.

3. Examine all rubber seals and 'O' rings for damage or deterioration; fit new parts if necessary. **The cover-plate sealing ring must be renewed.**

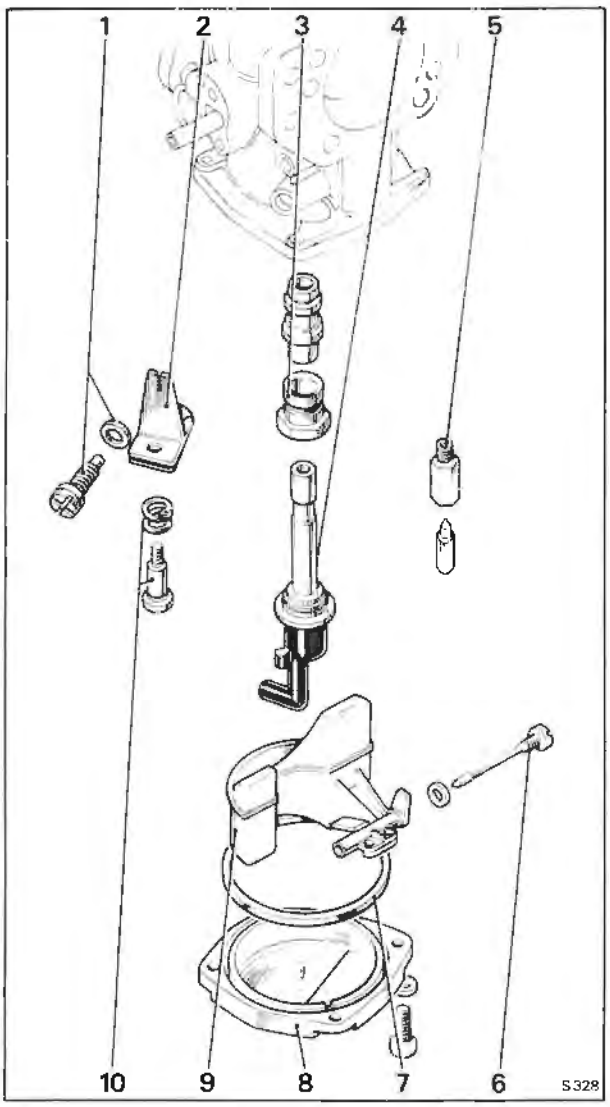

Fig. U33 Dismantling a carburetter (Lower half)

1 Jet adjusting screw and 'O' ring
2 Jet adjusting lever
3 Jet bearing assembly
4 Jet
5 Float chamber needle valve
6 Float pivot spindle
7 Sealing ring
8 Bottom cover plate
9 Float
10 Jet lever adjusting screw

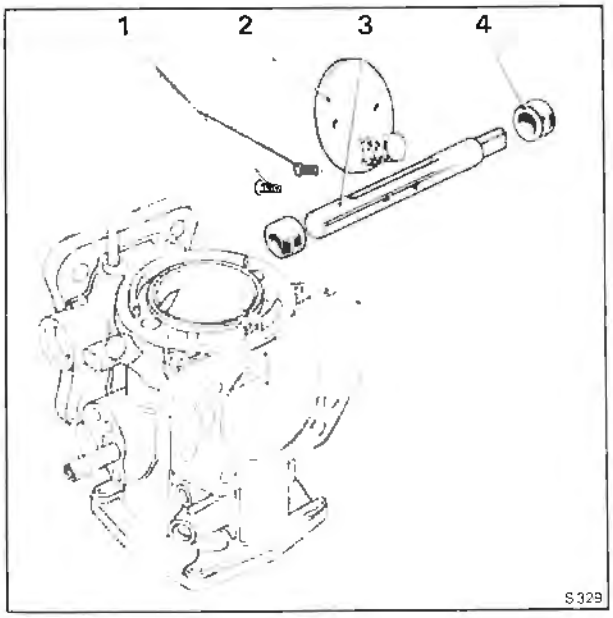

Fig. U34 Dismantling a carburetter (Throttle disc assembly)

1 Throttle disc retaining screws
2 Throttle disc assembly
3 Throttle spindle
4 Seal

4. Examine the carburetter body for cracks and damage and for security of the brass connections and the piston key.

5. Clean the inside of the suction chamber and piston rod guide with fuel or methylated spirit (denatured alcohol) and wipe dry. **Abrasives must not be used.**

6. Examine the suction chamber and piston for damage and signs of scoring.

7. Check that all the balls are in the piston ball race (2 rows, 6 per row). Fit the piston into the suction chamber, without the damper and spring, hold the assembly in a horizontal position and spin the piston. The piston should spin freely in the suction chamber without any tendency to stick.

Carburetter - To assemble

Assemble the carburetter by reversing the procedure given for removal, noting the following points.

1. Ensure that the throttle disc is fitted in its original position.

2. New throttle disc retaining screws must be used when refitting the disc. Ensure that the throttle disc is correctly positioned and closes correctly before tightening the retaining screws. Spread the split ends of the screws sufficiently to prevent turning.

3. Position the throttle spindle end seals just below the spindle housing flange.

4. When fitting the jet assembly to the adjusting lever ensure that the jet head moves freely in the bi-metal cut-out.

5. Fit a new float pivot spindle sealing washer or anneal the existing washer.

Check the level of the float in the float chamber (refer to Carburetter float level - To set).

6. Check that the small diameter of the jet adjusting screw engages the slot in the adjusting lever and set the jet 3,05 mm. (0,12 in.) below the bridge of the body.

7. Ensure that the needle guide etch mark aligns correctly with the piston transfer holes. After fitting the needle assembly, check that the shoulder of the guide aligns with the face of the piston (see Fig. U31).

8. To prevent the piston spring from being 'wound up' during reassembly, temporarily fit the piston and suction chamber, less the piston spring, to the body and pencil mark their relative positions to each other. Fit the spring to the piston, hold the suction chamber above the piston, align the pencil marks and lower the chamber over the spring and piston.

Before assembly ensure that the damper retainer (piston ball race clip) is refitted by pressing it fully into the piston rod (see Fig. U35).

The damper retainer (piston ball race clip) can also be installed with the suction chamber fitted to the engine by using fitting tool RH 9086.

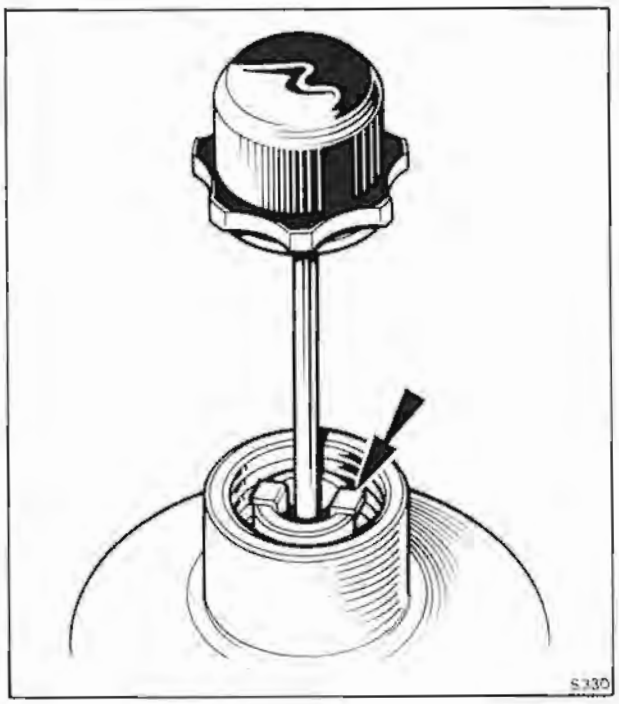

Fig. U35 Position of damper retainer

Carburetter float level - To set

1. Remove the carburetter from the engine.
2. Invert the carburetter.
3. Mark the bottom cover-plate and carburetter to ensure correct assembly, unscrew the retaining screws and remove the cover complete with the sealing ring.

A new rubber sealing ring must be installed when fitting the cover-plate.

4. Ensure that the float chamber needle valve is held in the closed position by the weight of the float only.
5. Check that the lowest point on the float (see Fig. U36) is either level with the float chamber face, or up to 1,52 mm. (0.060 in.) below.
6. If necessary, adjust the float position by carefully bending the brass pad.
7. Check that the float pivots correctly about the spindle.

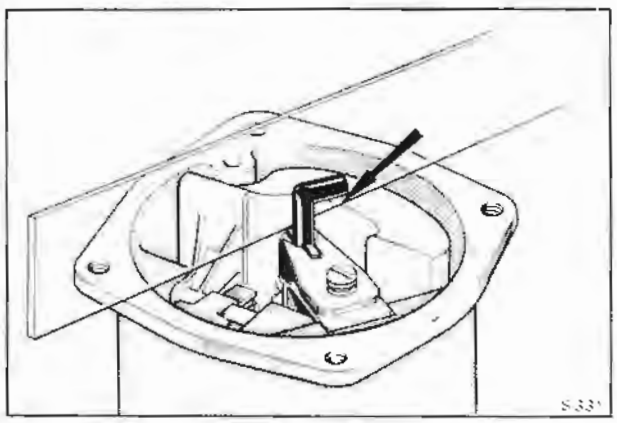

Fig. U36 Checking the float level

Carburetter air valve damper - To top-up

The upper portion of the guide spindle, attached to the air valve piston in each carburetter, is hollow and is filled with the same type of oil as used in the engine.

1. Unscrew the damper cap and carefully raise the damper until the damper, **together with the air valve piston**, reach the top of their travel. Ensure that the retainer is not displaced from its position in the piston rod (see Fig. U35).
2. Holding the damper and piston in the raised position; fill the recess in the damper retainer (piston ball race clip) with clean engine oil.
3. Lower the damper until the cap contacts the neck of the suction chamber, then carefully raise the damper and piston again and check the oil level, this is correct if the oil level is just visible in the bottom of the recess in the damper retainer (piston ball race clip). If the oil level is not visible, repeat the topping-up procedure until the oil level is correct.
4. Check that the damper retainer (piston ball race clip) is still in its correct position in the piston rod as shown in Figure U35, then lower the damper and screw the damper cap firmly into position.

Printed in England
© Rolls-Royce Motors Limited 1977
January 1977
T.S.D. 4200
(USA & Canada)

If the damper retainer (piston ball race clip) becomes inadvertently displaced during the topping-up procedure or if the damper should be removed from the piston, do not fit the damper cap or run the engine until the retainer has been returned to its correct position in the piston rod. The special tool RH 9086 should be used to fit damper retainer (piston ball race clip).

Carburetter throttle linkage - To fit and set (see Fig. U37)

1. Assemble 'A' bank and 'B' bank throttle levers (items 6 and 11) onto the carburetter spindles.
2. Fit the setting jig (RH 8880) into position on the throttle levers.
3. Fully close 'B' bank carburetter butterfly (item 7).
4. Tighten the pinch bolt securing 'B' bank throttle lever.
5. Fully close 'A' bank carburetter butterfly (item 2).
6. Tighten the pinch bolt securing 'A' bank throttle lever.
7. Fit the throttle spring (item 3) to the throttle levers.
8. Remove the setting jig from the throttle levers.
9. Fit the cross link guide bracket (item 9) to the carburetter 'tee' piece (item 5). Secure in position with two small screws which should be 'locked' using two tabs washers.
10. Fit the cross link (item 10) and the eccentric throttle adjuster (item 4) onto the throttle levers ensuring that both throttle butterflies are closed when adjusting and tightening the eccentric adjuster.

Note
The eccentric pin should be set in the lowest position possible.

11. Ensure that the cross link guide (item 9) has a clearance of between 1,27 mm. (0.050 in.) and 1,78 mm. (0.070 in.) with the cross link. If necessary bend the guide to give these clearances.
12. Check that the throttle linkage moves freely.
13. Fit the idle stop screw (item 8) and lock plate; adjust until the screw just contacts the stop bracket (item 9) with the throttle butterflies remaining in the closed throttle position.
14. Screw down the idle stop screw ½ turn.
15. Connect one end of the drive link (item 12) to the 'B' bank throttle lever and the other end, to the manifold shaft lever (item 13).
16. Operate the linkage to ensure free movement.
17. With the throttles in the closed position check that the 'A' bank control shaft to control rod lever (item 14) on the rear of the manifold shaft is in line with the front manifold shaft lever (item 13). Tighten the securing bolts on both levers.
18. Operate the mechanism; check for freedom of movement within the linkage and also clearance with the various engine components.
19. To set the remainder of the linkage from the control rod lever on the rear of the manifold shaft to the accelerator pedal refer to Chapter T - Transmission.

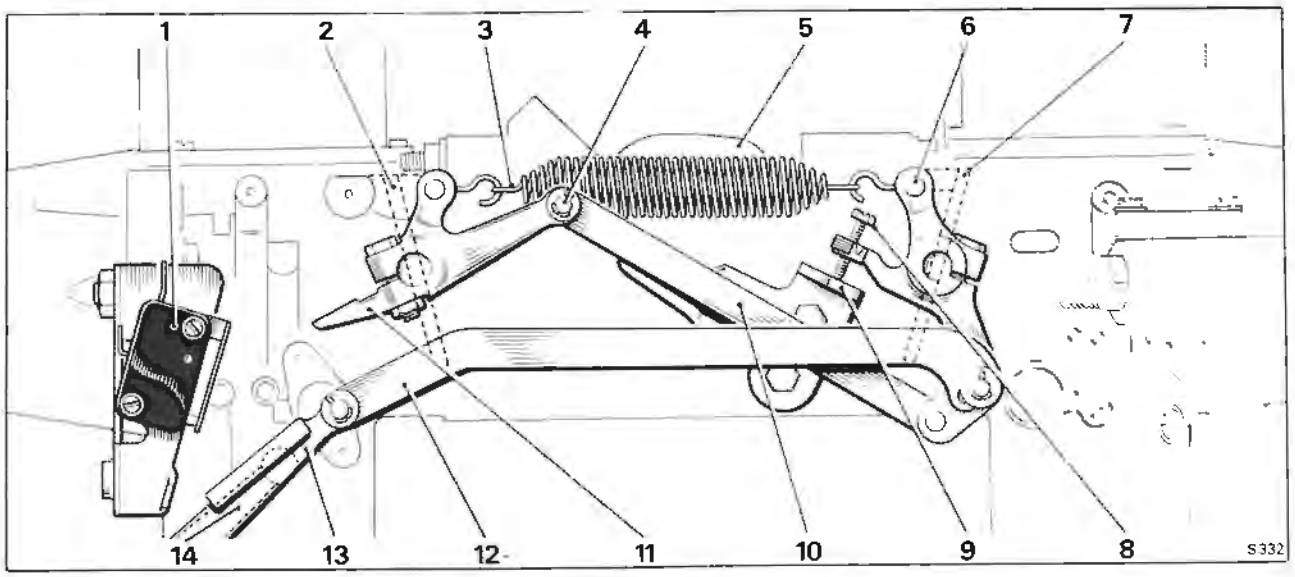

Fig. U37 Carburetter throttle linkage

1 E.G.R. full throttle cut-out micro-switch
2 'A' bank carburetter throttle butterfly
3 Throttle spring
4 Eccentric throttle adjuster
5 Carburetter 'tee' piece
6 'B' bank carburetter throttle lever
7 'B' bank carburetter throttle butterfly
8 Idle stop screw
9 Throttle cross link guide bracket
10 Cross link
11 'A' bank carburetter throttle lever
12 Drive link
13 Front manifold shaft lever
14 Rear manifold shaft lever

Printed in England

© Rolls-Royce Motors Limited 1977

January 1977

T.S.D. 4200
(USA & Canada)

Carburetters - To set

The carburetters fitted to these cars are adjusted at the factory using **special equipment** to ensure that their settings comply with the current emission control regulations.

Under normal circumstances the carburetters should not require adjustment in service.

If however, adjustment is found necessary due to inadvertent disturbance or replacement of a component set the carburetters by carrying out the following operations in the sequence given.

a. Set throttle linkage and temporarily set engine idle speed. Check linkage clearances.
b. Set cold start fast-idle cam.
c. Tune carburetters.
d. Set cold start fast-idle speed.
e. Set the kick-down micro-switch.
f. Set full throttle stop and full throttle E.G.R. cut-off micro-switch.

Carburetter tuning

Preliminary checks

Before tuning the carburetters the following checks should be carried out.

Ensure that the vehicle is in 'Park', the parking brake firmly applied and that the gear range actuator thermal cut-off has been removed from the main fusebox.

1. Check the condition of the spark plugs.
2. Check the ignition timing.
3. Check the flow through the choke stove pipe.
4. Check the entire induction system for air leaks.
5. Check the purge line flow rate.
6. Ensure that the air conditioning system is switched off.
7. Start the engine and warm up; allow to run for at least 5 minutes after the thermostat has opened.
8. Stop the engine, ensure that the choke butterfly valve is fully open and the choke fast-idle off.
9. Connect an electric impulse tachometer in accordance with manufacturer's instructions.
10. Check the float chamber depression.
11. Check the exhaust gas recirculation system for correct operation.
12. Check and set the full throttle exhaust gas recirculation cut-out micro-switch.

Carburetter idle air balance

1. Ensure that the usual safety precautions are carried out (i.e. parking brake firmly applied, gear range selector lever in Park, etc.) and connect an impulse tachometer in accordance with the manufacturer's instructions.
2. Disconnect the speed control chain.
3. Start and run the engine until normal operating temperature is attained.
4. Stop the engine.
5. Fit the dial gauges RH 9105 with RH 8841 (kit to convert dial gauges to fit the HIF7 carburetters) to the carburetter dashpots in place of the dampers.
6. Zero the gauges with the engine stopped and lightly tighten the gauge clamp screws.
7. Start and run the engine at the idle speed setting (650 r.p.m.); adjust the carburetter piston lifts to be equal (within 10%) using the eccentric adjuster (see Fig. U37).
8. The average piston lift reading should now be between 2,03 mm. and 2,54 mm. (0.080 in. and 0.100 in.).

If the idle speed piston lift is over 2,54 mm. (0.100 in.) check the ignition timing at idle as this condition may result in unsatisfactory driveability.

9. Stop the engine and remove the impulse tachometer.
10. Remove the dial gauges and fit the carburetter dampers. **Ensure that the dashpot ball race clips (piston damper retainers) are fitted correctly and are pressed fully into the piston rod (see Fig. U35) using tool RH 9086.**
11. Connect the speed control chain and adjust to give a minimum slack condition, consistant with no impediment to the throttle lever to return to the idle speed position.

Carburetter mixture strength - To set

1. Ensure that the usual safety precautions are carried out (i.e. parking brake firmly applied, gear range selector lever in Park, etc.) and connect an impulse tachometer in accordance with the manufacturer's instructions.
2. Remove the air intake, blank off the hot idle compensator feed drilling (see Fig. U38) and replace the intake.

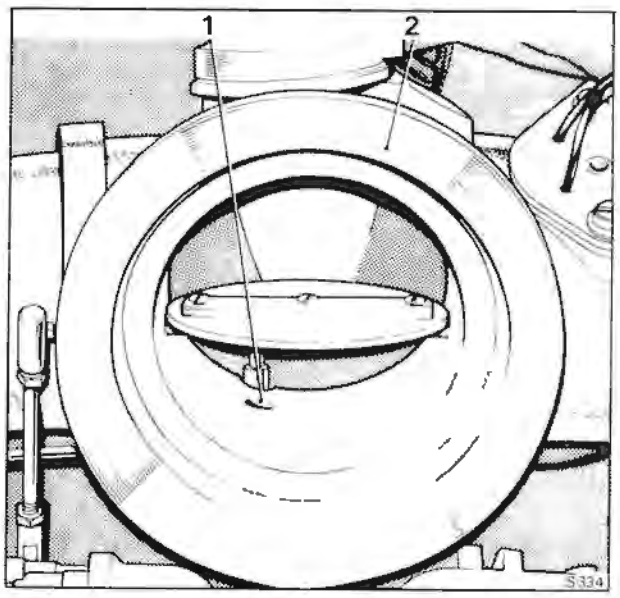

Fig. U38 Hot idle mixture compensator feed

1 Hot idle compensator feed
2 Air intake butterfly housing

3. Remove the air inlet hose from the air injection system pressure relief valve and fit a blank over the valve (a suitable blank may be produced from a short length of rubber hose with one end plugged).

Note
The air injection system is inoperative when the relief valve inlet air hose is disconnected from the air pump. The valve must be blanked to prevent air being drawn into the exhaust port by pulsations in the exhaust system since this would affect the idle CO reading.

4. Disconnect the E.G.R. cut-off solenoid to carburetter signal hose at the solenoid, blank off the hose.
5. Unscrew and remove the pressure tapping cap from the weakening device.
6. Ensure that the engine has run for at least 25 minutes after the thermostat has opened.
7. Purge the engine at 2 000 r.p.m. in Neutral for ¼ minute. Allow the engine speed to return to the idle setting and ensure that this is 650 r.p.m., adjust if necessary using the idle stop screw.
8. Insert the probe of a CO meter into either exhaust system tailpipe and check the reading.

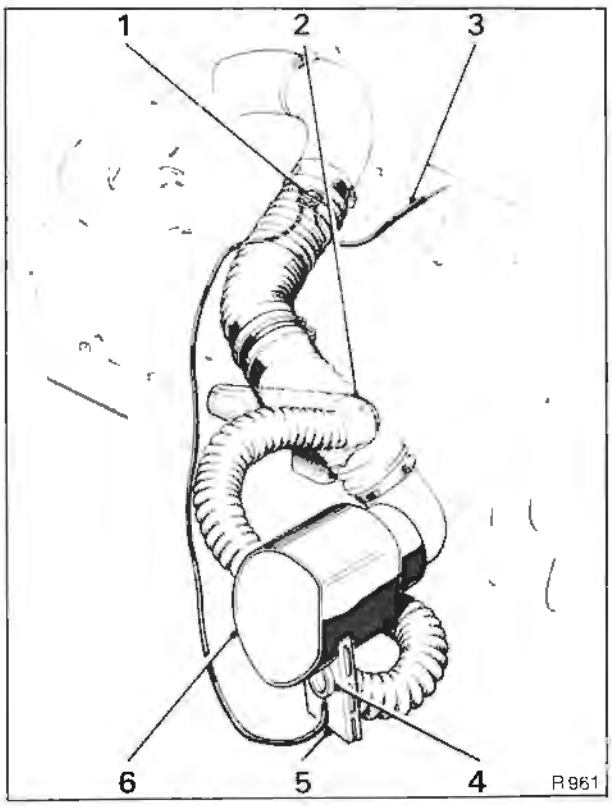

Fig. U39 Temperature controlled air intake
1 Temperature sensor
2 Hot air scoop
3 Manifold vacuum hose
4 Air blend valve
5 Cold air intake
6 Air cleaner/silencer

9. The CO meter reading should be 1% to 4%. If the reading is outside the limits quoted
a. Check for induction system leaks (if below 1%)
b. Check the choke stove and purge line flow rates.
10. If after carrying out Operation 8 the idle speed CO meter reading is still outside the limits quoted, the carburetter mixture screws (see Fig. U29) may be adjusted by equal amounts up to ⅛ turn in the same direction in order to achieve the mean limit of 2.5%. No attempt should be made to adjust the CO reading if it is in the region of 2.5% to 4.0%.

Note
a. Clockwise rotation of the mixture screws will richen the mixture.
b. The tuning operations should be carried out in the shortest possible time. If the time exceeds 3 minutes, run the engine at 2 000 r.p.m. in Neutral for ¼ minute and then resume the tuning operations. Repeat this purging operation if a further period of 3 minutes is exceeded.

After purging the system gently tap all around the neck of the carburetter suction chamber with a lightweight non-metallic object (i.e. the wooden handle of a small screwdriver), to eliminate carburetter piston hysteresis. The engine is to be run on Indolene Clear (HO) reference fuel or equivalent (Unleaded gasoline only).

11. Stop the engine.
12. Fit the pressure tapping cap to the weakening device, fit a new sealing washer if necessary.
13. Remove the blank from the air pressure relief valve and connect the feed hose from the air pump to the relief valve.
14. Remove the blank from the E.G.R. cut-off solenoid to carburetter signal hose and connect the hose to the E.G.R. cut-off solenoid.
15. Start the engine and check the idle speed, this should be 650 r.p.m.; adjust by means of the idle stop screw (refer to Section U6).
16. Stop the engine, remove the air intake and discard the blank from the hot idle compensator feed drilling; fit the air intake.
17. Remove the impulse tachometer.

Carburetter tamperproofing
Both carburetter mixture screws **must** have tamper-proof caps fitted upon completion of the setting operation.

Special tools have been designed and produced for the fitting of the tamperproof caps as follows.
'A' bank carburetter mixture screw cap - RH 9096
'B' bank carburetter mixture screw cap - RH 9097

Temperature controlled air intake

To ensure rapid warm-up and improve control of the air/fuel ratio a temperature controlled air intake is fitted (see Fig. U39).

A vacuum operated blending valve attached to the air cleaner assembly is controlled by a thermal sensor in the air intake elbow. This valve blends hot

air from a pick-up point (scoop) adjacent to the exhaust manifold with cold air from under the front wing; thus maintaining a constant temperature of the intake air as it enters the carburetters.

All other details for the Temperature Controlled Air Intake System are given in Chapter K except for the checking procedure which is as follows.

Temperature controlled air intake - To check

1. Disconnect the air intake hose at the intake elbow and check that the correct temperature sensor is fitted, this should be colour coded white.

2. Disconnect the hose from the temperature sensor to the underwing air silencer, at the temperature sensor.

3. Clean the end of the hose, place in the mouth and apply a vacuum by sucking. Check that there is no air leak. Release the vacuum sharply and listen for the vacuum motor within the wing to 'click' open.

4. Reconnect the hoses.

Note

If there is an air leak or the operation of the temperature controlled air intake is suspect, remove the right-hand front underwing sheet and check the hose connection to the vacuum motor; also observe the operation of the temperature flap.

Printed in England
© Rolls-Royce Motors Limited 1977

January 1977
T.S.D. 4200
(USA & Canada)

Section U6

Ignition system

Data

Ignition timing	9°B.T.D.C. (Static) 15°B.T.D.C. at 1 200 r.p.m. 7° - 13° B.T.D.C. at idle speed (650 r.p.m.) (Approach 1 200 r.p.m. from a higher speed).

Ignition control system

The ignition system utilises an Opus distributor (in which an oscillator pick-up and control unit replace the conventional contact breaker), a high load ignition coil and a ballast resistor. The control unit comprises an electronic oscillator, amplifier and power transistor.

A drum with eight ferrite rods (one per cylinder) moulded into the outer edge is mounted onto the distributor drive-shaft. As the drum rotates a voltage is created each time a ferrite rod passes the oscillator pick-up, this signal is then amplified and used to switch-off the normally conducting power transistor in the primary coil circuit thus inducing a high voltage in the secondary winding which is distributed to the sparking plugs in the normal manner.

The distributor has a conventional centrifugal advance mechanism.

In addition, **cars other than those destined for California** are fitted with a system employing a vacuum advance capsule, the carburetter gated vacuum signal is applied to the capsule to advance the ignition timing for part throttle economy during open road cruising. This vacuum signal is inhibited by a solenoid valve until a predetermined coolant temperature is reached.

The Opus distributor provides increased accuracy of timing and increased service life before maintenance is required.

For the removal and fitting instructions of the ignition system components refer to Chapter M.

Ignition - To time (using a stroboscope)

The ignition is timed on A1 cylinder which is located at the front left-hand side of the engine (viewed from the front of the car).

Note

If the ignition timing is to be set, ensure that the sparking plugs are in good condition before running the engine, if they require cleaning or renewal the sparking plugs gap should be set to 0,9 mm. (0.035 in.).

1. To check the ignition timing commence by running the engine until normal operating temperature is attained and the choke 'fast-idle' is in the off position. Switch off the engine.
2. Connect a stroboscope and a tachometer to the engine as described in the instructions supplied with the respective equipment. **On cars other than those destined for California,** disconnect the feed hose at the distributor vacuum advance capsule and blank off the feed hose.
3. Start the engine and adjust the throttle stop screw to give an idle speed of 1 200 r.p.m. When setting the engine idle speed reduce from a higher speed to 1 200 r.p.m.
4. Direct the flashing light of the stroboscope onto the crankshaft damper timing marks and timing pointer; the pointer is positioned on the right-hand side of the crankshaft damper when viewed from the front of the engine.
5. If the timing pointer does not coincide with the 15° B.T.D.C. mark on the crankshaft damper adjust the ignition timing as follows.
6. Release the clamp screw on the distributor and rotate the head of the distributor in the appropriate direction until the correct timing is obtained. Clockwise rotation of the distributor head advances the ignition and conversely anti-clockwise rotation retards the ignition. After adjustment has been carried out tighten the clamp screw and again check to ensure that the timing has not altered whilst tightening the clamp screw.
7. Set the engine idle speed to 650 r.p.m.
8. Direct the flashing light of the stroboscope onto the crankshaft damper timing marks and timing pointer. Check that the ignition timing is approximately 7° - 13° B.T.D.C.

Operations 9 to 11 inclusive apply only to cars employing a vacuum advance capsule (i.e. cars other than those destined for California).

9. Disconnect the hose from the vacuum manifold to the purge line restrictor at the restrictor (see Fig. U4). Connect a suitable length of hose between this hose and the connection on the distributor vacuum capsule.
10. Start the engine and set the idle speed to 650 r.p.m.
11. Direct the flashing light of the stroboscope onto the crankshaft damper timing marks and timing pointer. Check that the ignition timing has advanced to between 15° and 25° B.T.D.C. If the ignition timing has not advanced, the distributor assembly is faulty.

Printed in England
© Rolls-Royce Motors Limited 1979
November 1979
T.S.D. 4200 (USA & Canada 1977 Model year)

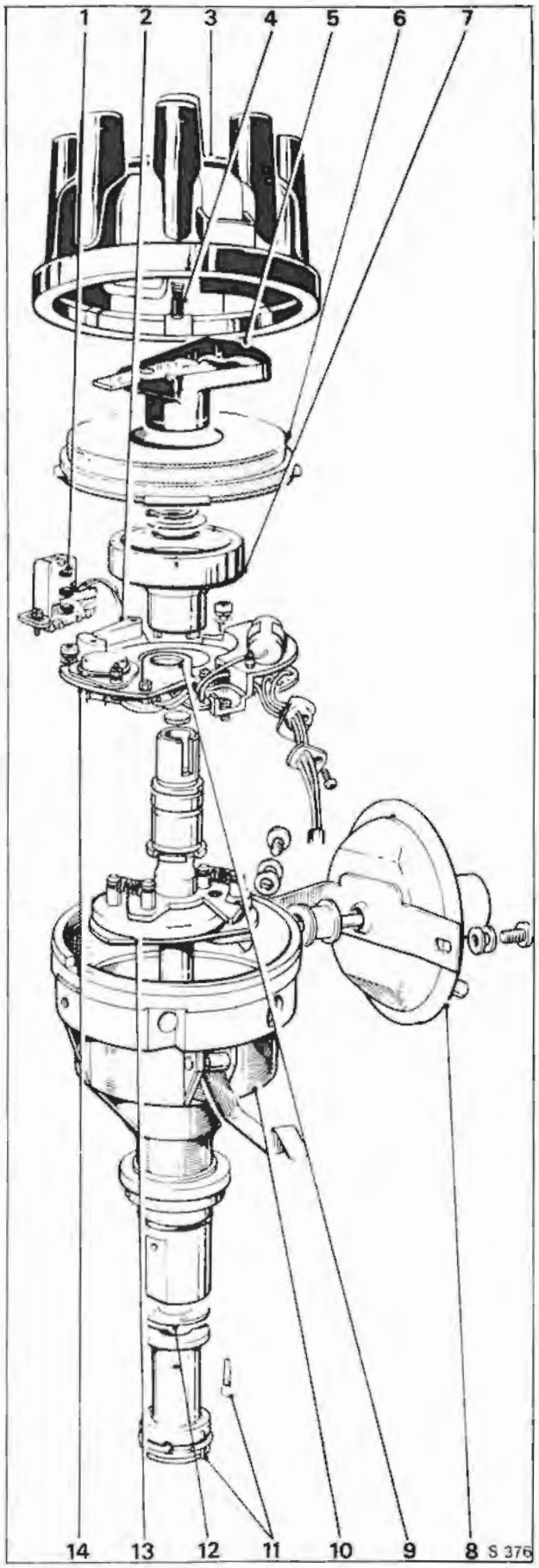

12. Stop the engine.
13. Fit all hoses to their correct connections.
14. Start the engine and set the idle speed to 650 r.p.m.
15. Stop the engine and remove all the test equipment.

Setting the engine idle speed
Ensure that the engine is at normal operating temperature and that the choke 'fast-idle' is in the off position.

The air conditioning system must be switched off and a tachometer connected to the engine in accordance with the manufacturer's instructions.
1. Stop the engine, remove the air intake and blank off the hot idle compensator feed drilling (see Fig. U38); replace the air intake.
2. Start the engine and, if necessary, adjust the engine idle speed to 650 r.p.m. using the throttle stop screw.
3. Stop the engine and remove the air intake. Remove the blank from the hot idle compensator feed drilling and fit the air intake. Detach the tachometer and stroboscopic timing equipment.

Distributor maintenance
The distributor requires no routine maintenance except that, at the mileage intervals specified in the Service Schedules, the moulded cover and H.T. rotor arm should be removed and the spindle shaft bearings lubricated by inserting a few drops of engine oil onto the felt pad. The automatic advance mechanism should also be lubricated at this time with a few drops of engine oil inserted through apertures in the base plate.

Sparking plugs
The sparking plugs approved for this car are Champion RN 14 Y. Before fitting the plugs, set the gaps with the aid of a feeler gauge to 0,9 mm. (0.035 in.) and lightly smear the threads with 'Graphogen' grease.

Fig. U40 Ignition distributor

1	Pick-up module
2	Pick-up arm
3	Distributor cover (cap)
4	High tension brush and spring
5	Rotor arm
6	Flash over shield (dust cover)
7	Timing rotor
8	Vacuum advance unit (not connected on cars destined for California)
9	Control unit
10	Distributor body
11	Driving dog and pin
12	Thrust washer
13	Automatic advance mechanism
14	Electronic module assembly

Section U7

Electrical components

The electrical components described in this section would normally appear in Chapter M - Electrical System, however, as they are only used in connection with the emission control system it is thought more practical to include the information in this Chapter.

The components concerned are as follows.

E.G.R. system lock-out switch
E.G.R. system cut-off solenoid
Anti 'run-on' solenoid
Weakening system cut-off solenoid
Weakening system lock-out switch
Full throttle E.G.R. cut-off micro-switch

E.G.R. system lock-out switch

The bi-metal lock-out switch is situated in the engine coolant thermostat outlet elbow (see Fig. U41).

E.G.R. system lock-out switch - To remove

1. Remove the radiator filler cap and drain the engine coolant.
2. Disconnect the electrical leads.
3. Unscrew and remove the three 2 B.A. setscrews, spring washers and plain washers.
4. Free the joint and withdraw the lock-out switch.

E.G.R. system lock-out switch - To fit

Fit the lock-out switch by reversing the procedure given for removal, noting the following points.

1. Each setscrew has one spring and one plain washer.
2. The joint faces must be clean and a new gasket fitted.

E.G.R. system lock-out switch - To check

1. Withdraw the protective sheath from the electrical connections.
2. Do not disturb any wiring but connect both electrical connections via a test lamp.
3. Ensure that the engine is cold [i.e. engine coolant temperature below approximately 14°C. (57°F.)].
4. Check that the test lamp bulb is illuminated.
5. Start and run the engine; as the coolant exceeds approximately 14°C. (57°F.) the test lamp bulb should extinguish.
6. Stop the engine and allow to cool, noting that as the coolant temperature drops to approximately 12°C. (54°F.) the test lamp bulb again illuminates.

E.G.R. system cut-off solenoid

This assembly is situated rearmost of the three solenoid assemblies mounted on a platform, adjacent to the 'B' bank carburetter (see Figs. U4 & U42).

E.G.R. system cut-off solenoid - To remove

1. Detach the electrical connections, noting the position of the connections to assist identification when assembling.
2. Detach the rubber hose from either side of the solenoid.
3. Unscrew the two 'cheese-headed' mounting screws and withdraw the solenoid.

E.G.R. system cut-off solenoid - To fit

Fit the cut-off solenoid by reversing the procedure given for removal.

E.G.R. system cut-off solenoid circuit wiring - To check

1. Disconnect the 9 White and 14 White/Green cables at the solenoid 'Lucar' connections.
2. Connect a test lamp across the two disconnected cables (in place of the solenoid).
3. Ensure that the engine is cold.

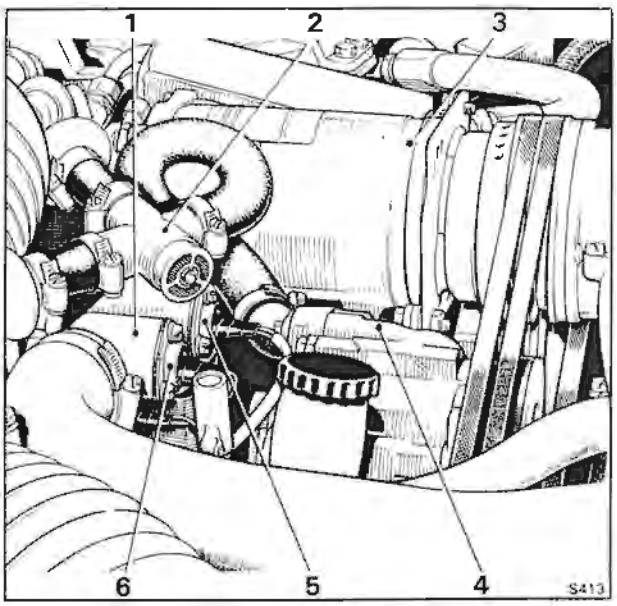

Fig. U41 E.G.R. system lock-out switch

1 Thermostat outlet elbow
2 Three-way connection block
3 Refrigeration compressor
4 Air pump
5 Cooling system booster fan switch
6 E.G.R. lock-out switch

Printed in England
© Rolls-Royce Motors Limited 1977

4. Switch on the ignition and note that the bulb of the test lamp is illuminated.
5. Start and run the engine, as the engine coolant temperature exceeds approximately 14°C. (57°F.) the test lamp bulb should extinguish.
6. Depress the full throttle cut-out micro-switch plunger and check to ensure that the test lamp bulb illuminates. Release the plunger and the test lamp bulb should extinguish.

E.G.R. system cut-off solenoid - To check
1. Detach the carburetter vacuum signal to E.G.R. cut-off solenoid hose at the solenoid and blank off the hose.

Connect a suitable length of hose to the solenoid connection.
2. Clean the open end of the additional hose.
3. Switch on the ignition.
4. Place the hose in the mouth and apply suction.
5. If the operation of the solenoid is correct note that the following conditions apply.

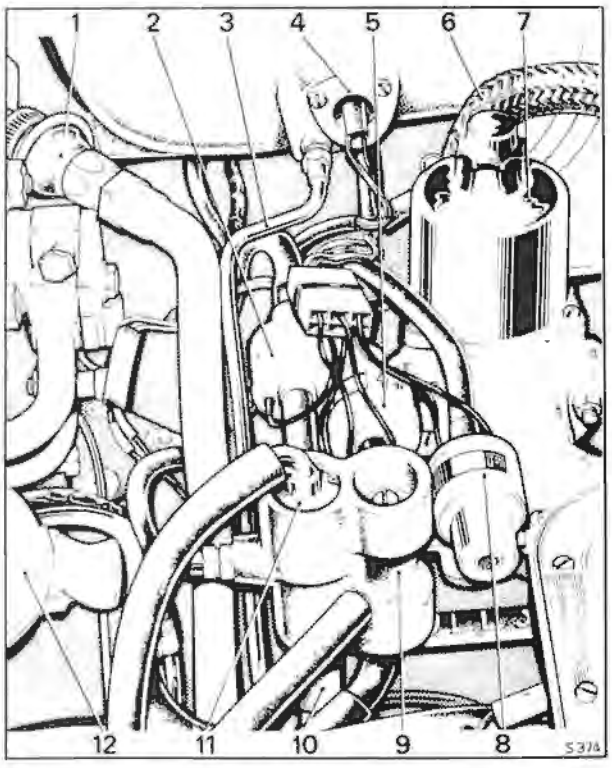

Fig. U42 Solenoid platform
1 Check valve
2 Anti 'run-on' solenoid
3 Choke stove pipe
4 Weakening device cut-out switch
5 Weakening device cut-off solenoid
6 Exhaust gas distribution pipe
7 'B' bank carburetter
8 E.G.R. cut-off solenoid
9 Mixture weakening device
10 Fuel receiver
11 Float chamber vent valve
12 Engine oil filler cap

a. With an engine coolant temperature of below approximately 14°C. (57°F.) blowing air through the hose **should not** be possible
b. With an engine coolant temperature of above approximately 14°C. (57°F.) blowing air through the hose **should** be possible.
c. As the engine coolant temperature falls to 12°C. (54°F.) the conditions described in (a) should again apply.
6. If the operation of the solenoid is suspect, fit a new unit.

Anti 'run-on' solenoid

The anti 'run-on' solenoid is situated on a platform adjacent to 'B' bank carburetter; it is the foremost of the three solenoids fitted on the platform.

The use of low octane fuel often causes an engine to 'diesel' (i.e. to continue to run-on after the ignition has been switched off, particularly when the engine is hot). To prevent this an anti 'run-on' solenoid is fitted between the fuel receiver and the induction manifold (see Figs. U4 and U42). When the ignition is switched off the solenoid valve opens and connects the weakening system to the induction manifold, thus creating a high depression in the float chambers which cuts off the fuel supply.

Anti 'run-on' solenoid - To remove
1. Disconnect the rubber hose from either side of the solenoid.
2. Disconnect the two electrical leads at their Lucar connections.
3. Unscrew and remove the two screws situated one on either side of the solenoid body.
4. Withdraw the anti 'run-on' solenoid.

Anti 'run-on' solenoid - To fit
Fit the anti 'run-on' solenoid by reversing the procedure given for removal.

Anti 'run-on' solenoid circuit wiring - To check
1. Connect a test lamp across the two Lucar connections to the solenoid. **Do not disconnect the two connections.**
2. Switch on the ignition and check that the test lamp bulb illuminates.
3. Switch off the ignition and check that the test lamp bulb is extinguished.

Anti 'run-on' solenoid - To check
1. Ensure that the usual safety precautions are carried out (i.e. parking brake firmly applied, gear range selector lever in Park, etc.).
2. Connect an impulse tachometer in accordance with the manufacturer's instructions.
3. Detach the weakening device pressure tapping cap (see Fig. U24) and connect a manometer capable of reading 0 to 15,5 cm. (0 to 6 in.) of water to the tapping.
4. Disconnect the carburetter vacuum signal to E.G.R. cut-off solenoid hose at the solenoid. Blank off the hose.

5. Start and run the engine at the idle speed setting (650 r.p.m.).
6. Switch off the engine and observe the reading on the manometer. The reading should momentarily increase to approximately 15.5 cm. (6.0 in.) as the engine stops.
7. If the reading does not increase, the operation of the anti 'run on' solenoid is incorrect.

This could be caused by the following.

a. A blockage in the hose (see Fig. U24) from the anti 'run-on' solenoid to the weakening device.
b. A blockage in the hose (see Fig. U24) from the anti 'run-on' solenoid to the vacuum manifold or in the vacuum manifold.
c. Incorrect wiring to the anti 'run-on' solenoid.
d. Faulty anti 'run-on' solenoid.

Weakening system cut-off solenoid

The weakening device cut-off solenoid is the central of the three solenoids mounted on the platform adjacent to 'B' bank carburetter (see Figs. U4 and U42).

Weakening system cut-off solenoid - To remove

1. Detach the electrical connections, noting the position of the connections to assist identification when assembling.
2. Detach the rubber hose from either side of the solenoid.
3. Unscrew the two 'cheese-headed' mounting screws and withdraw the solenoid.

Weakening system cut-off solenoid - To fit

Fit the cut-off solenoid by reversing the procedure given for removal.

Weakening system cut-off solenoid circuit wiring - To check

1. Connect a test lamp across the two 'Lucar' connections to the solenoid. **Do not disconnect the two connections.**
2. Ensure the engine is cold.
3. Switch on the ignition and start the engine noting that the bulb of the test lamp is illuminated.
4. Run the engine, noting that as the engine warms-up [the inlet air temperature reaches approximately 14° C. (57° F.)] the test lamp bulb should extinguish.
5. Stop the engine and allow to cool, noting that when the engine becomes cold [the air in the intake drops to a temperature of approximately 12° C. (54° F.)] the test lamp bulb again illuminates.

Weakening system cut-off solenoid - To check

1. Detach the carburetter vacuum signal to weakening system cut-off solenoid hose at the solenoid and blank off the hose.

Connect a suitable length of hose to the solenoid connection.

2. Clean the open end of the additional hose.
3. Switch on the ignition.
4. Place the hose in the mouth and apply pressure.
5. If the operation of the solenoid is correct note that the following conditions apply.

a. With a cold engine [i.e. the inlet air temperature below approximately 14° C. (57° F.)] blowing air through the hose **should not** be possible.
b. As the engine warms-up [i.e. an inlet air temperature of approximately 14° C. (57° F.) or above] blowing air through the hose **should** be possible.
c. As the engine again cools [i.e. the inlet air temperature drops below approximately 12° C. (54° F.)] the conditions described in (a) should again apply.

Weakening system lock-out switch

The weakening system lock-out switch is situated in the side of the air intake elbow adjacent to the choke stove take-off pipe and 'B' bank carburetter (see Fig. U42).

Weakening system lock-out switch - To remove

1. Withdraw the protective sheath and detach the electrical connections, noting the position of the connections to assist identification when assembling.
2. Unscrew and remove the three setscrews and spring washers.
3. Withdraw the lock-out switch.

Weakening system lock-out switch - To fit

Fit the lock-out switch by reversing the procedure given for removal.

1. Ensure that the gasket is in a good condition.
2. The setscrews must be fitted with spring washers.
3. The protective sheath must be fitted over the electrical connections.

Weakening system lock-out switch circuit wiring - To check

1. Detach the 9 White/Blue cable from the weakening system lock-out switch.
2. Fit one side of a test lamp to the 9 White/Blue cable and the other side to a good earth.
3. Switch on the ignition noting that the test lamp bulb illuminates.
4. Switch off the ignition noting that the test lamp bulb extinguishes.

Weakening system lock-out switch - To check

1. Withdraw the protective sheath from the electrical connections.
2. Do not disturb any wiring but connect both electrical connections via a test lamp.
3. Ensure that the engine is cold [i.e. intake air temperature below approximately 14° C. (57° F.)] and switch on the ignition.
4. Check that the test lamp bulb is illuminated.

Printed in England
© Rolls-Royce Motors Limited 1977
January 1977
T.S.D. 4200
(USA & Canada)

5. Start and run the engine; as the engine warms-up [i.e. the inlet air temperature exceeds approximately 14° C. (57° F.)] the test lamp bulb should extinguish.

Full throttle E.G.R. cut-off micro-switch

The full throttle E.G.R. cut-off micro-switch is mounted on a bracket which is attached to the forward side of 'A' bank carburetter. The micro switch is operated by a plunger fitted to the throttle linkage (see Fig. U43).

Full throttle E.G.R. cut-off micro-switch - To remove

1. Detach the two 'Lucar' connections adjacent to the micro-switch.
2. Unscrew the two retaining setscrews and withdraw the micro-switch.

Full throttle E.G.R. cut-off micro-switch - To fit

Fit the full throttle E.G.R. cut-off micro-switch by reversing the procedure given for removal noting the following point.

1. After fitting the micro-switch ensure that it is correctly set.

Full throttle E.G.R. cut-off micro-switch circuit wiring - To check

1. Disconnect the 9 White and 14 White Green cables at the E.G.R. system cut-off solenoid 'Lucar' connections.

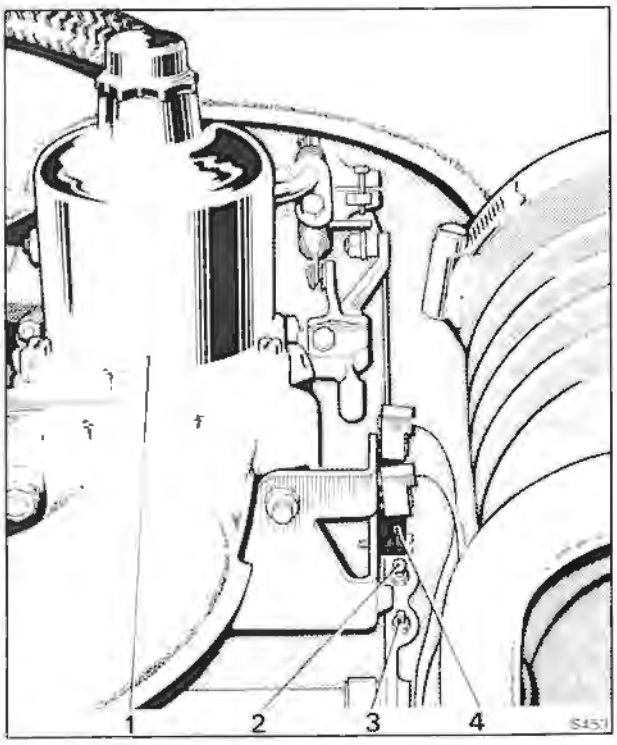

Fig. U43 Full throttle E.G.R. cut-out micro-switch

1 'A' bank carburetter
2 Micro-switch operating plunger
3 Full throttle stop
4 Cut-out micro-switch

2. Connect a test lamp across the two disconnected cables (in place of the solenoid).
3. Detach the two 'Lucar' connections from the full throttle E.G.R. cut-off micro-switch and connect a suitable switch across the cable connection (in place of the micro-switch).
4. Ensure that the engine is cold.
5. Switch on the ignition and note that the test lamp bulb is illuminated.
6. Start and run the engine, as the engine coolant temperature exceeds approximately 14° C. (57° F.) the test lamp bulb should extinguish.
7. Switch on (make the contacts) the switch that has replaced the micro-switch, noting that the test lamp bulb illuminates.

Full throttle E.G.R. cut-off micro-switch - To set

1. It is important to ensure that the engine throttle linkage (refer to Section U5 and Chapter T) and the kick-down micro-switch (refer to Chapter T) are correctly set.
2. Depress the accelerator pedal until it just touches the toeboard mounted kick-down switch (further depression of the pedal requires increased effort).
3. Hold the accelerator in this position.
4. Release the lock-nut and screw the spring loaded operating button (see Fig. U43) away from the E.G.R. full throttle cut-out micro-switch.
5. Screw the spring loaded operating button towards the micro-switch until the micro-switch is heard to 'click'. Secure the lock-nut.
6. Depress the accelerator to operate the toeboard kick-down micro-switch and then set the full throttle stop (see Fig. U43) to prevent overloading of the micro-switch.
7. The full throttle stop should be set so that the throttle movement is stopped just before the full spring travel of the micro-switch spring loaded operating button is reached.

Full throttle E.G.R. cut-off micro-switch - To check

To check the full throttle E.G.R. cut-off micro-switch carry out the instructions given in E.G.R. system cut-off solenoid circuit wiring - To check, noting in particular Operation 6.

Section U8

Fault diagnosis

Symptoms	Possible Cause
1. Engine will not start. (Starter motor operating).	1. (a) Ignition circuit broken. (b) Failed anti 'run-on' solenoid or failure of electrical supply circuit. (c) Ignition system faulty. (d) Damaged or contaminated ignition high tension circuit. (e) Blocked fuel feed line, fouled float chamber filters or fouled fuel recirculation restrictor. (f) Faulty choke bi-metal coil. (g) Choke solenoid inoperative. (h) Faulty choke 'fast-idle' mechanism. (i) Air leak into induction system. (j) Faulty hot idle mixture compensator. (k) Weakening device filter blocked, weakening device air intake non-return valve failed or blockage in rubber connecting hoses. (l) Faulty weakening device cut-off solenoid or failure of electrical supply circuit. (m) Faulty weakening device control switch or failure of electrical supply circuit. (n) Dislodged venturi in weakening device. (o) Flooding of carburetter float chamber or jet. (p) Exhaust gas recirculation valve(s) failed.
2. Engine idles very roughly.	2. (a) Ignition system faulty. (b) Fouled sparking plugs. (c) Damaged or contaminated ignition high tension circuit. (d) Fouled fuel recirculation restrictor. (e) Air leak into induction system. (f) Faulty hot idle compensator. (g) Weakening device filter blocked, weakening device air intake non-return valve failed or blockage in rubber connecting hoses. (h) Badly worn or damaged carburetter control linkage. (i) Flooding of carburetter float chamber or jet. (j) Sticking carburetter piston. (k) Incorrect operation of carburetter jet compensation. (l) Fouled carburetter float chamber or jet. (m) Exhaust gas recirculation valve(s) failed. (n) Incorrect operation of temperature controlled air intake system.
3. Engine stalls.	3. (a) Ignition circuit broken. (b) Failed anti 'run-on' solenoid or failure of electrical supply circuit. (c) Ignition system faulty. (d) Damaged or contaminated ignition high tension circuit.

Printed in England

© Rolls-Royce Motors Limited 1977

January 1977

T.S.D. 4200
(USA & Canada)

Symptoms	Possible Cause
3. Engine stalls (continued)	(e) Blocked fuel feed line, fouled float chamber filters or fouled fuel recirculation restrictor. (f) Air leak into induction system. (g) Faulty hot idle mixture compensator. (h) Weakening device filter blocked, weakening device air intake non-return valve failed or blockage in rubber connecting hoses. (i) Badly worn or damaged carburetter control linkage. (j) Flooding of carburetter float chamber or jet. (k) Sticking carburetter piston. (l) Incorrect operation of carburetter jet compensation. (m) Fouled carburetter float chamber or jet. (n) Exhaust gas recirculation valve(s) failed.
4. (i) Engine shows signs of power loss evident at high speeds and loading. (ii) Engine misfires particularly on hard acceleration from low speed.	**4.** (a) Ignition system faulty. (b) Fouled sparking plugs. (c) Damaged or contaminated ignition high tension circuit. (d) Blocked fuel feed line or fouled float chamber filters. (e) Choke system operation incorrect. (f) Sticking carburetter piston. (g) Fouled carburetter float chamber or jet. (h) Faulty exhaust gas recirculation full throttle cut-out switch or failure of electrical supply circuit. (i) Exhaust gas recirculation valve(s) failed. (j) Failed exhaust gas recirculation valve(s) cut-out solenoid or electrical supply circuit.
5. Engine hesitates or misfires under light load.	**5.** (a) Failed anti 'run-on' solenoid or failure of electrical supply circuit. (b) Ignition system faulty. (c) Fouled sparking plugs. (d) Damaged or contaminated ignition high tension circuit. (e) Blocked fuel feed line or fouled float chamber filters. (f) Air leak into induction system. (g) Faulty hot idle mixture compensator. (h) Weakening device filter blocked, weakening device air intake non-return valve failed or blockage in rubber connecting hoses. (i) Dislodged venturi in weakening device. (j) Flooding of carburetter float chamber or jet. (k) Incorrect operation of carburetter jet compensation. (l) Fouled carburetter float chamber or jet. (m) Exhaust gas recirculation valve(s) failed. (n) Incorrect operation of temperature controlled air intake system.
6. Increase in fuel consumption.	**6.** (a) Ignition system faulty. (b) Fouled fuel recirculation restrictor. (c) Faulty choke bi-metal coil. (d) Choke system operation incorrect. (e) Air leak into induction system. (f) Faulty hot idle mixture compensator.

Symptoms	Possible Cause
6. Increase in fuel consumption (continued)	(g) Weakening device filter blocked, weakening device air intake non-return valve failed or blockage in rubber connecting hoses. (h) Faulty weakening device cut-off solenoid or failure of electrical supply circuit. (i) Faulty weakening device control switch or failure of electrical supply circuit. (j) Air leak in mixture weakening system. (k) Flooding of carburetter float chamber or jet. (l) Sticking carburetter piston. (m) Incorrect operation of carburetter jet compensation. (n) Incorrect purge flow rate. (o) Exhaust gas recirculation valve(s) failed.
7. Decrease in fuel consumption.	7. (a) Air leak in mixture weakening system. (b) Incorrect operation of carburetter jet compensation. (c) Incorrect purge flow rate. (d) Faulty exhaust gas recirculation temperature control switch or failure of electrical supply circuit. (e) Exhaust gas recirculation valve(s) failed.
8. Engine 'backfires' on overrun	8. (a) Ignition system faulty. (b) Air leak into induction system. (c) Faulty hot idle mixture compensator. (d) Exhaust gas recirculation valve(s) failed.
9. Sudden increase in engine idle speed.	9. (a) Faulty choke 'fast-idle' mechanism. (b) Failed carburetter overrun valve.
10. Excessive noise from air injection pump or system.	10. (a) Faulty or damaged air injection pump, relief or check valves, connecting hoses or pipes.

Printed in England

© Rolls-Royce Motors Limited 1977

January 1977

T.S.D. 4200
(USA and Canada)

Section U9

Workshop tools

Tool Number	Description
RH 8090	Pliers - wire hose clips
RH 8841	Dial gauge - carburetter piston lift
RH 8880	Setting jig - throttle levers
RH 8945	Connector - choke stove pipe
RH 9086	Fitting tool - carburetter piston ball race clip
RH 9096	Fitting tool - 'A' bank mixture adjusting screw tamperproof seal
RH 9097	Fitting tool - 'B' bank mixture adjusting screw tamperproof seal
RH 9105	Kit - to adapt RH 8841 to fit S.U. HIF 7 carburetters

Printed in England

© Rolls-Royce Motors Limited 1977

January 1977

T.S.D. 4200
(USA & Canada)

Section U10

Running changes

No. 1 Vehicles destined for high altitude areas in the U.S.A.

To comply with legislation, cars destined for the United States of America that will be operating mainly in designated 'High Altitude Areas' have been subjected to a running change.

High Altitude Areas are defined in the Federal Register - Volume 41 - Number 46 - Dated Monday, March 8th 1976 - as a County or Counties in the U.S.A. wholly located above 1 219 metres (4 000 feet).

The High Altitude running change consists of a kit of parts UE 41707 which contains the components illustrated in Figure 1.

The components should be assemblied onto the engine as shown in Figure 1 and reference made to the appropriate section within Chapter U for specific instructions.

A new emission control label is supplied with the kit of parts, this must be fitted in place of the original label on the heater box and should be legible from the right-hand wing.

The original label will self-destruct when it is removed however, the pieces should be burnt.

In addition, the electrical connection to the refrigeration compressor ambient switch (situated in the heater box adjacent to the ignition distributor) should be altered by disconnecting the 'Lucar' connection in the Yellow/Black cable. Tape the Yellow-Black cable back into the loom and connect the dormant Red Brown cable to the 'Lucar' and hence the switch.

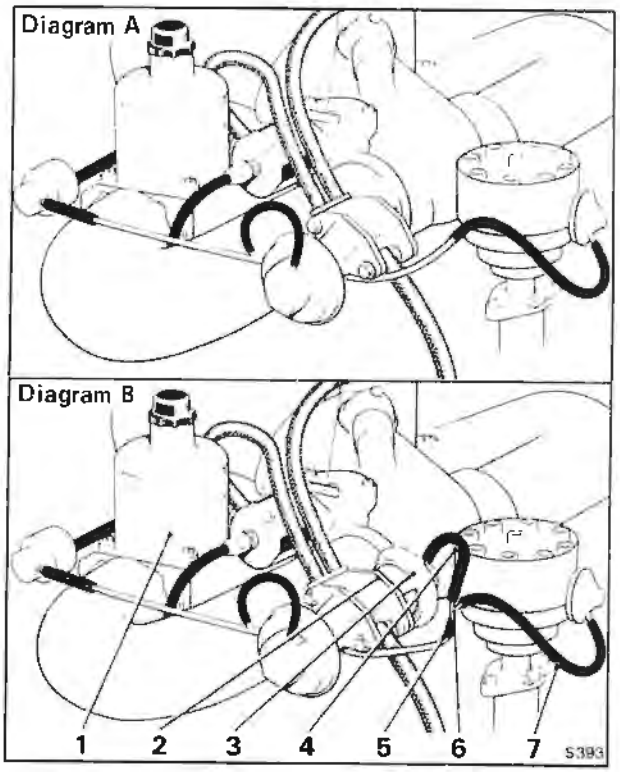

Fig. 1 Running change for High Altitude Cars
Diagram A - Before **Diagram B** - After

1 BEH carburetter needles
2 E.G.R. valve gasket
3 Additional E.G.R. valve
4 E.G.R. valve hose
5 E.G.R. signal hose
6 Metal 'tee' piece pipe
7 Vacuum advance capsule hose

Printed in England

© Rolls-Royce Motors Limited 1977

January 1977

T.S.D. 4200
(USA and Canada)

S 263

Printed in England

© Rolls-Royce Motors Limited 1977

June 1977

T.S.D. 4200

Chapter U

Emission control systems

Applicable to 1978 model year cars destined for USA & Canada

Section

U1 Introduction
U2 Exhaust emission control system
U3 Fuel evaporative emission control system
U4 Crankcase emission control system
U5 Carburetters and Automatic choke system
U6 Ignition system
U7 Electrical components
U8 Fault diagnosis
U9 Workshop tools
U10 Running changes

Chapter U - 1978 U.S.A. & Canada

Issue record sheet 1

March 1980

The dates quoted below refer to the issue date of individual pages within this chapter.

Section	U1	U2	U3	U4	U5	U6	U7	U8	U9	U10		
Page No.												
1	Jun 77	Jun 77	Jun 77	Mar 80	Jun 77	Nov 79	Jun 77	Jun 77	Jun 77	Jun 77		
2	Jun 77	Jun 77	Jun 77		Jun 77	Nov 79	Jun 77	Jun 77				
3	Jun 77	Jun 77	Jun 77		Jun 77		Jun 77	Jun 77				
4	Jun 77	Jun 77	Jun 77		Jun 77		Jun 77					
5		Nov 79	Jun 77		Jun 77							
6		Nov 79	Jun 77		Jun 77							
7		Jun 77	Jun 77		Jun 77							
8		Jun 77	Jun 77		Jun 77							
9			Jun 77		Jun 77							
10			Jun 77		Jun 77							
11					Jun 77							
12					Jun 77							
13					Jun 77							
14												
15												
16												
17												
18												
19												
20												
21												
22												
23												
24												
25												
26												
27												
28												
29												
30												
31												
32												
33												
34												
35												
36												
37												
38												
39												
40												
41												
42												
43												
44												
45												
46												
47												
48												

Printed in England

© Rolls-Royce Motors Limited 1980

T.S.D. 4200
(USA & Canada 1978 Model year)

Section U1

Introduction

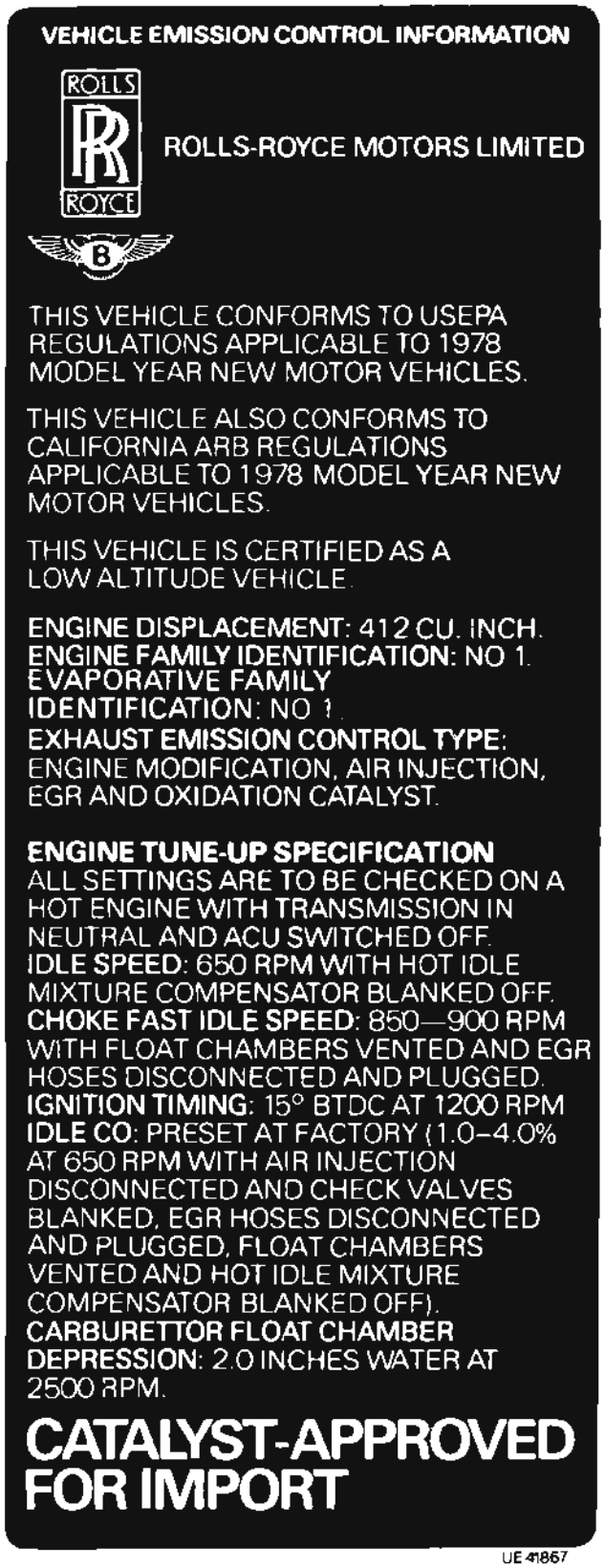

Fig. U1 Emission control certification label

Identification

This Chapter has been written specifically for cars fitted with Emission Control Systems conforming to the North American regulations applicable to 1978 model year new motor vehicles.

It is important therefore that Service Personnel fully understand the contents of this Chapter so that the special servicing can be correctly carried out.

Rolls-Royce and Bentley motor cars conforming to the above regulations and produced to the 1978 model year specification can be readily identified as follows:

1. **Car Serial Number**
A letter G as the last prefix letter of the Car Serial Number (e.g. SRG or LRG, etc.).
2. **Emission Control Certification Label**
A 1978 Emission Control Certification Label (similar to Figure U1) located on top of the automatic air conditioning system heater box, inside the engine compartment.

Engine compartment

Figures U2 and U3 overleaf show the location of the major emission control system components within the engine compartment.

Hose routing diagram

Figure U4 within the Introduction section gives details of the various hose 'runs' and connections in and around the engine compartment, that are associated with the emission control systems components.

Torque tightening

When fitting the various emission control systems components, ensure that the securing nuts and set-screws are tightened to the torque figures given in Chapter P, unless otherwise stated in this Chapter.

Printed in England

© Rolls-Royce Motors Limited 1977

June 1977

T.S.D. 4200
(USA and Canada)

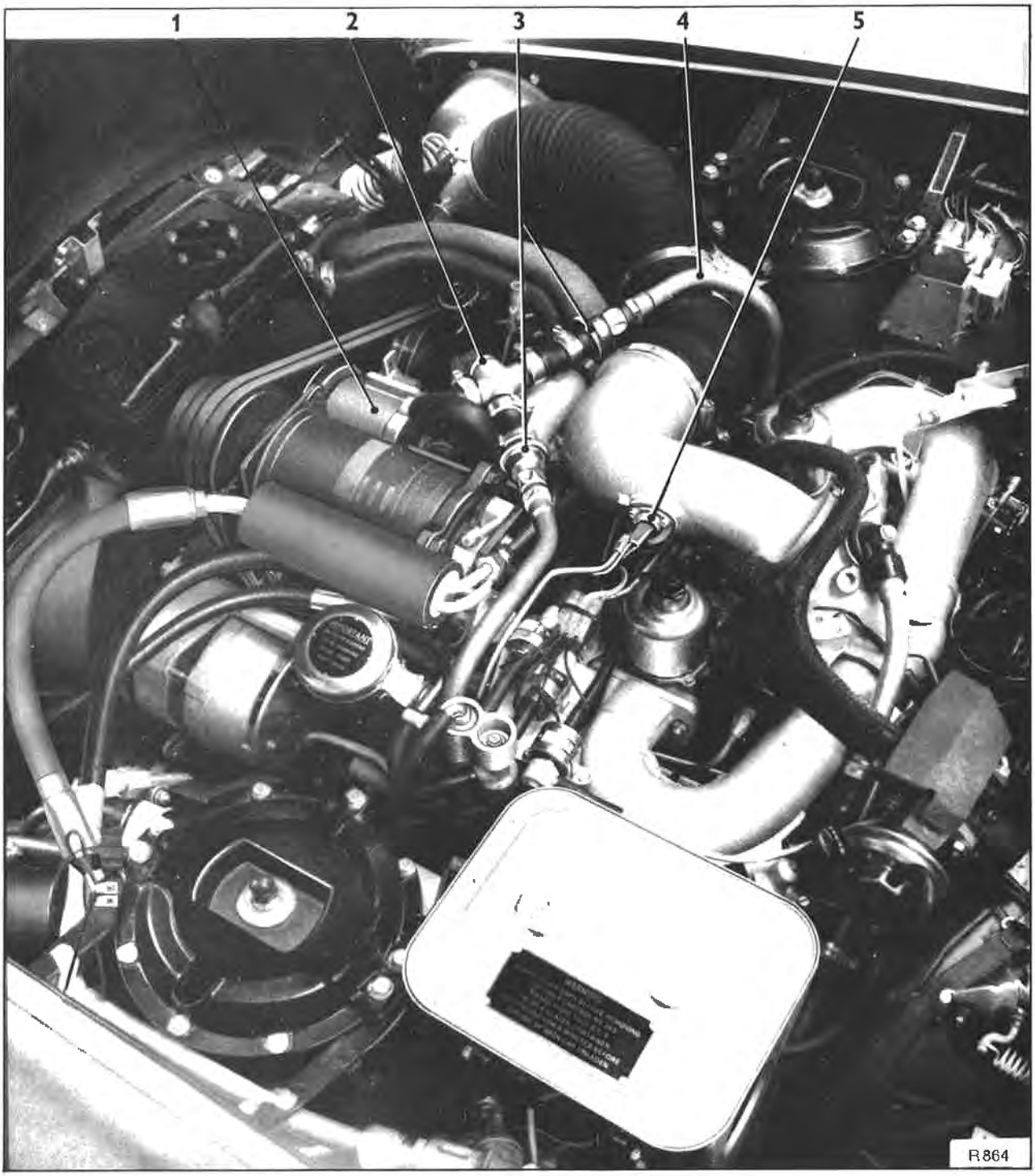

Fig. U2 Engine compartment details (L.H. side)

1 Air pump
2 Connection block and relief valve
3 Check valves
4 'A' bank air manifold
5 Weakening device cut-out switch

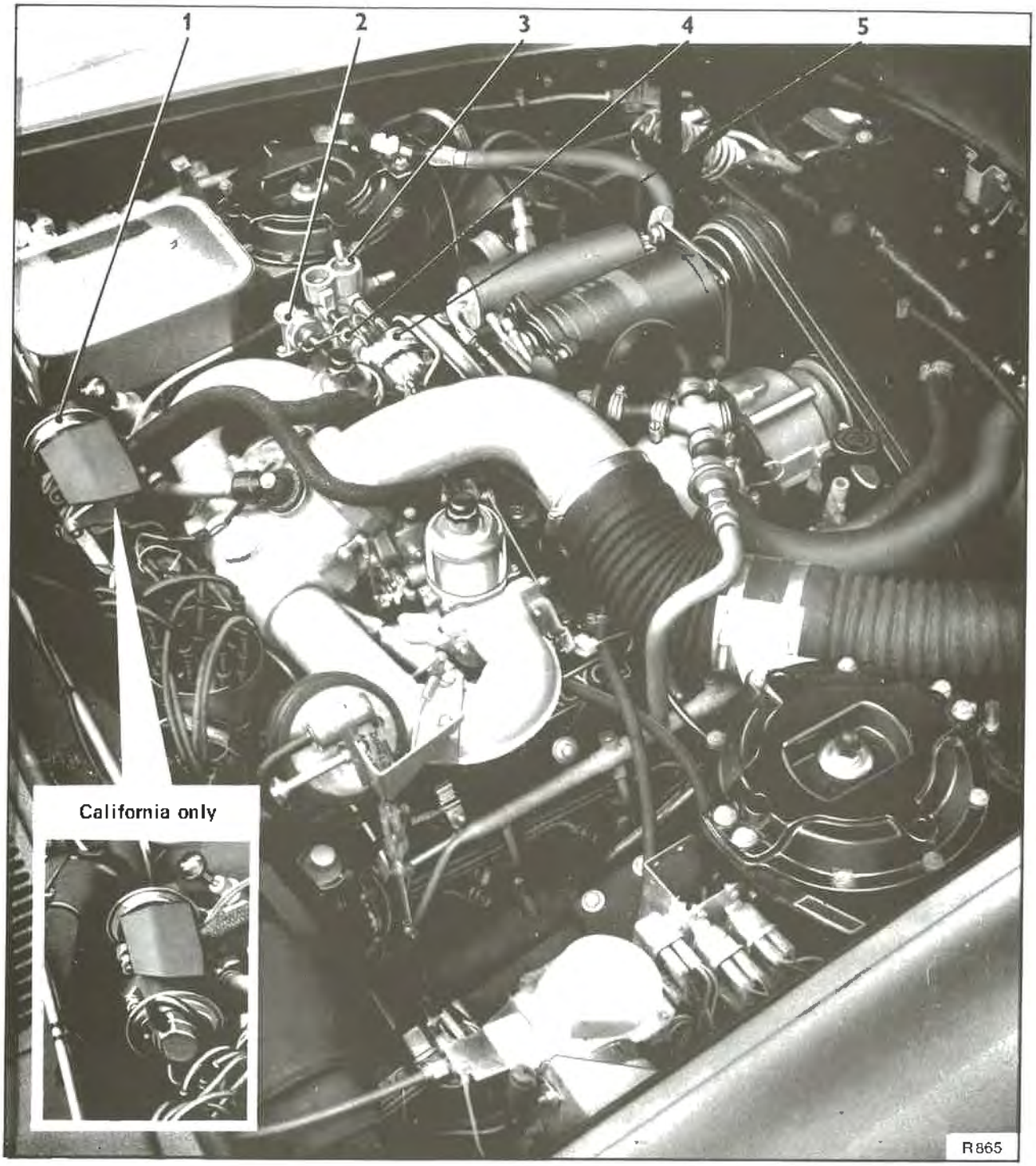

Fig. U3 Engine compartment details (R.H. side)

1 Exhaust gas recirculation valve(s)
2 Exhaust gas recirculation cut-off solenoid
3 Weakening device assembly
4 Weakening device cut-off solenoid
5 Anti 'run-on' solenoid

Printed in England

© Rolls-Royce Motors Limited 1977

June 1977

T.S.D. 4200
(USA & Canada)

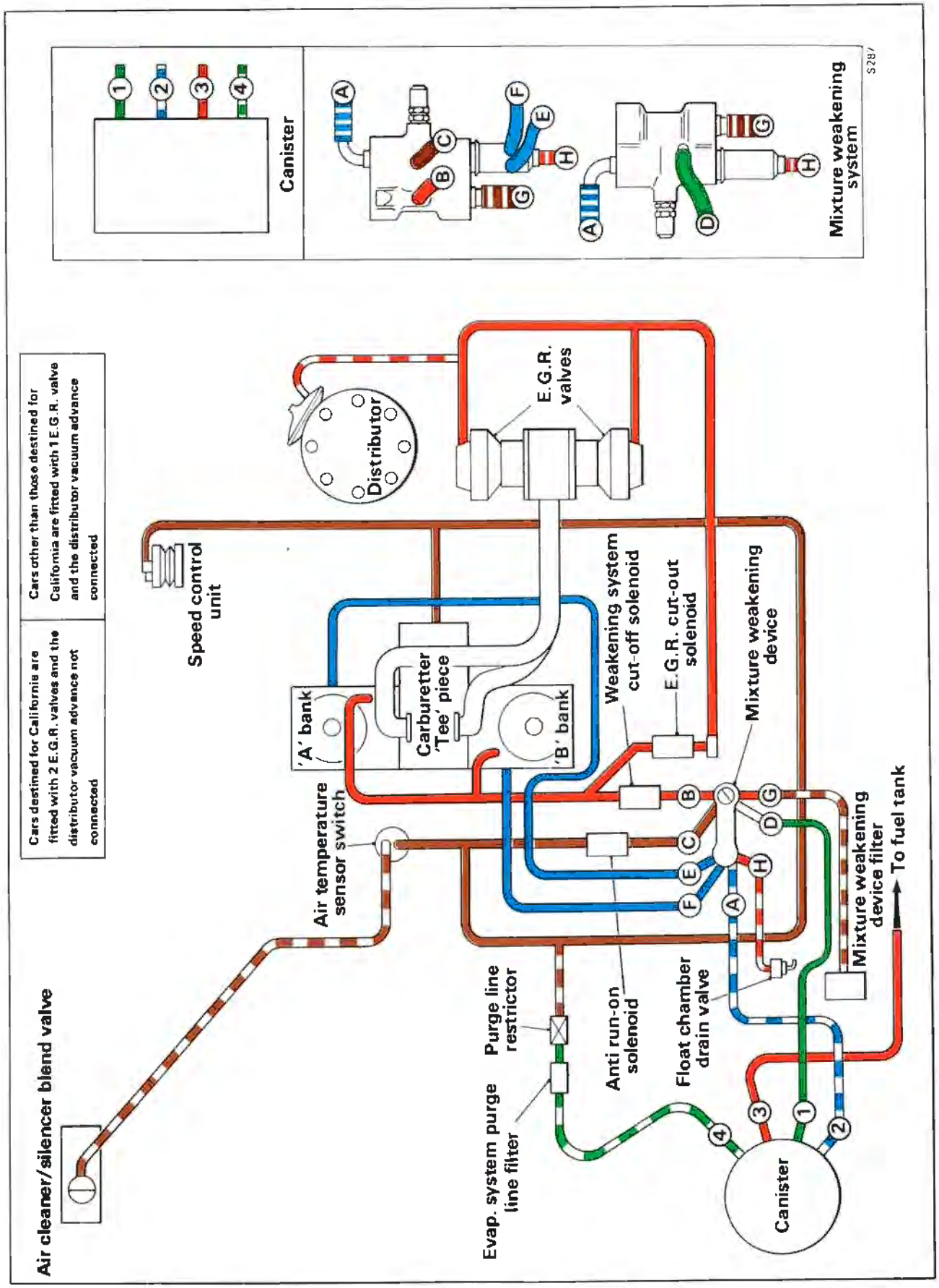

Fig. U4 Hose routing diagram - 1978 model year cars

Printed in England

© Rolls-Royce Motors Limited 1977

June 1977

T.S.D. 4200
(USA & Canada)

Section U2

Exhaust emission control system

The Exhaust Emission Control System is designed to reduce the carbon monoxide, unburnt hydrocarbon and oxides of nitrogen content in the exhaust gases.

This system does not eliminate the danger caused by inhaling exhaust gases in a confined area.

Air from the atmosphere is drawn into the engine driven air injection pump through a centrifugal filter. From the pump, a quantity of air proportional to engine speed passes via a three-way connection block (containing a relief valve), through check valves to the air manifolds and then into the exhaust ports. This air combines with the exhaust gases discharged from the combustion chambers and promotes the oxidation process in the exhaust system and catalytic converters. The gases then pass through the exhaust system to atmosphere.

In addition, a proportion of the exhaust gas from the exhaust balance pipe situated between the two downtake pipes, is recirculated through a vacuum operated metering valve(s) into the carburetter 'tee' piece, just downstream of the throttle plates. The recirculated exhaust gas mixes with the inlet charge of fuel/air mixture in the induction manifold and is distributed to the cylinders, lowering the peak combustion temperature and reducing oxides of nitrogen emissions.

Before commencing work on the exhaust emission control system, care should be taken to ensure that the relevant components are not hot.

The system is illustrated in Figure U5 and comprises the following main components.

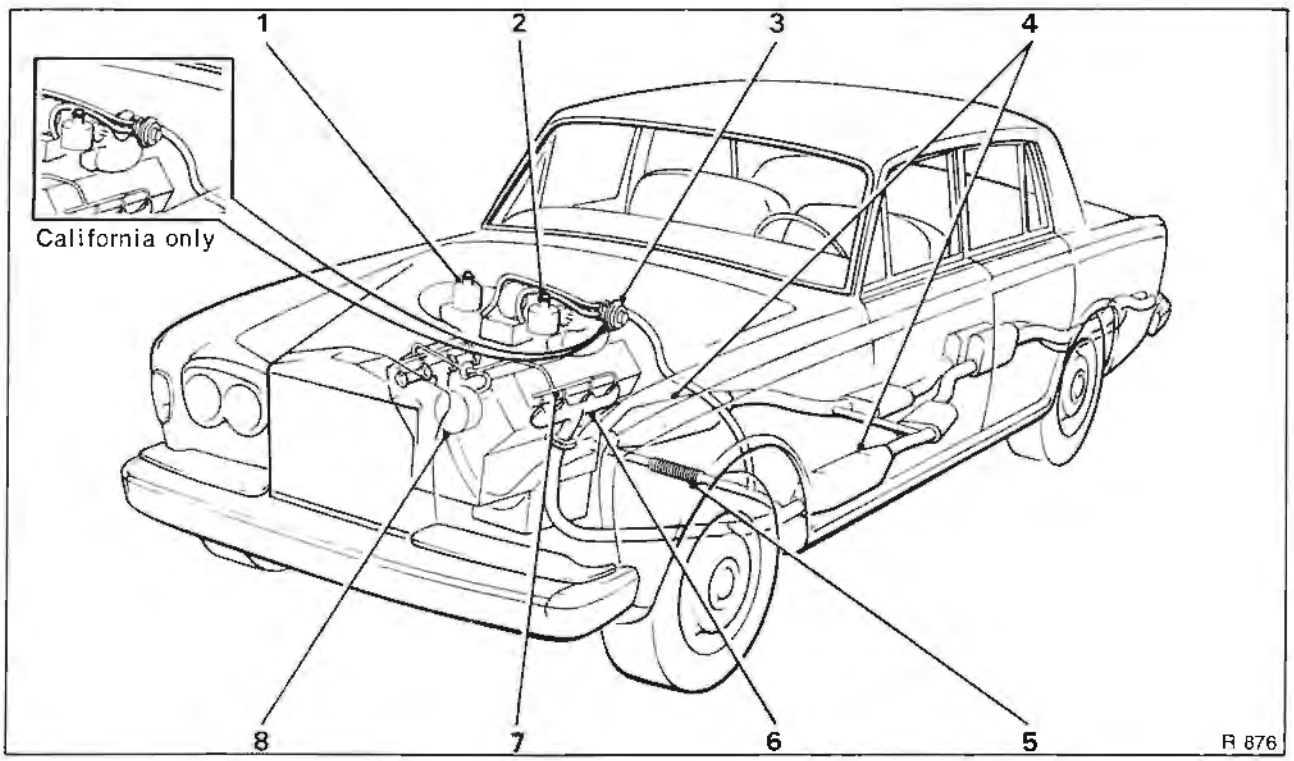

Fig. U5 Exhaust emission control system

1 'A' bank carburetter
2 'B' bank carburetter
3 Exhaust gas recirculation valve(s)
4 Catalytic converters
5 Exhaust system balance pipe
6 'B' bank exhaust manifold
7 'B' bank air manifold
8 Air pump

Air injection system (see Fig. U6)
Air manifolds
Air pump
Check valves
Centrifugal air filter
Pressure relief valve
Three-way connection block

Exhaust gas recirculation system (E.G.R.) (see Fig. U9)
Cut-off solenoid (see Section U7)
Cut-out switch (see Section U7)
Distribution pipes
E.G.R. valve(s)
E.G.R. valve(s) heatshield
Feed pipe
Full throttle cut out micro switch (see Section U7)

Oxidation catalyst system (see Figs. U5 and U12)
Catalytic converters
(For the remainder of the Exhaust system refer to Chapter Q).

For details of the servicing and maintenance requirements of the Exhaust Emission Control System, refer to the Service Schedules Manual - T.S.D. 4117.

Air injection system (see Figs U5 and U6)
A detailed description of the air injection system is given at the beginning of this section

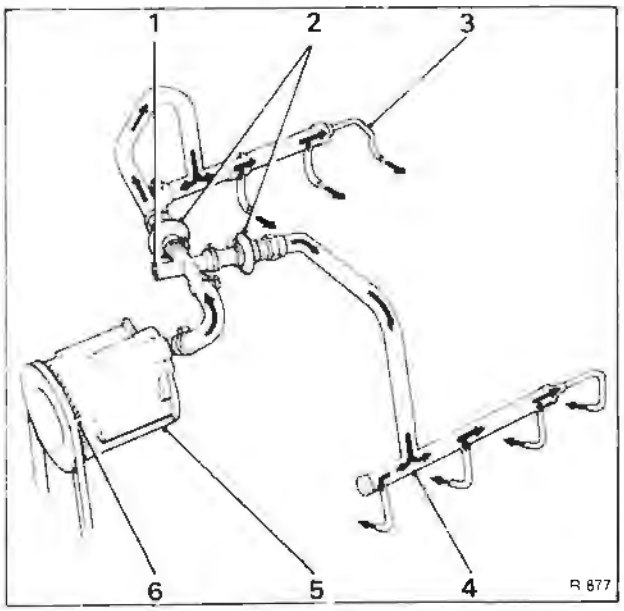

Fig. U6 Air injection system
1 Relief valve
2 Check valves
3 'A' bank air manifold
4 'B' bank air manifold
5 Air pump
6 Air pump intake

Air injection system - To test
1. Connect an electric impulse tachometer to the engine in accordance with the manufacturer's instructions.
2. Start and run the engine at a constant speed of 2 000 r.p.m., check that air does not escape from the relief valve.
3. If air does escape during Operation 2, check that the correct (blue) setting plug is fitted to the pressure relief valve
4. If the system does not operate as described in Operation 2, stop the engine and fit a new three-way connection block assembly (containing the pressure relief valve).
5. Repeat Operation 2.
6. Stop the engine and remove the test equipment.

Air injection system - Leak check
Check the air injection system for air leaks by carrying out the following sequence of operations
1 Ensure that the ignition is switched off.
2. Visually inspect the condition of all hoses pipes and joints associated with the air injection system
3. Ensure that all worm drive clips are tight
4. Start the engine and listen carefully for any evidence of an air leak from the system
5. If an air leak is suspected it is permissible to coat the component or hose with a soap solution soap bubbles will confirm an air leak

Air injection system - Fault diagnosis
To diagnose malfunctioning of the air injection system refer to Section U3 - Fault diagnosis of this Chapter

Air manifolds
The air manifolds convey air from the check valves to the engine exhaust ports. One air manifold is fitted to each bank of cylinders and is identified as 'A' bank air manifold or 'B' bank air manifold.

To remove an air manifold unscrew the check valve union and the four ¼ in. A.F. adapters in the cylinder head.

The 'A' bank air manifold is reasonably straight forward to withdraw but 'B' bank air manifold will require the disconnecting of several other hoses and pipes (e.g. choke stove pipes, fuel evaporative weakening device hoses and pipes, etc.), to facilitate withdrawal.

Fit the air manifolds by reversing the procedure given for removal, noting that the check valve union has a tapered thread. All the adapters in the cylinder head should be torque tightened to the figures given in Chapter P.

Air pump
The air pump is of the rotary vane type and is belt driven from the engine coolant pump. The centrifugal air filter is an integral part of the pump and is situated between the pump body and the pump driving pulley.

Air pump - To remove (see Fig. U7)

1. Disconnect the battery (refer to Chapter M).
2. Unscrew the worm drive clip and detach the hose from the pump to the three-way connection block, at the pump. Blank off the hose and pump connections to prevent the ingress of dirt, etc.
3. Slacken the two 7/16 in. A/F setscrews on the drive belt adjustment strut; remove the upper bolt.
4. Remove the drive belt from the pulley.
5. Support the air injection pump and unscrew and remove the 7/16 in. A/F mounting setscrew situated on the opposite side of the pump pulley

Air pump - To fit

Fit the air pump by reversing the procedure for removal noting the following

1. Ensure that the driving belt is adjusted so that an applied force of 5,5 kg. (12 lbs.) mid-way between the air injection pump pulley and the coolant pump pulley causes the belt to deflect 9.5 mm. (0.375 in.).

Air pump pulley

1. To remove unscrew and remove the three set-screws situated around the centre of the pulley Withdraw the pulley.
2. To fit the pulley, reverse the procedure given for removal ensuring that the setscrews are torque tightened to the correct figure (see Chapter P)

Check valves

The check valves are non-return valves (one-way valves) and one is fitted into the air injection system between the air pump and the air manifolds for each bank of cylinders.

The check valves prevent the backflow of exhaust gases into the air lines or air pump they operate whenever the exhaust back pressure exceeds the air pump delivery pressure at high speed and/or in the case of air pump drive belt failure

To remove a check valve, slacken the worm drive clip situated on the air pump to check valve hose Unscrew the union from the air manifold and withdraw the check valve Fit a check valve in the reverse order.

Pressure relief valve (see Figs. U6 and U8)

The spring loaded pressure relief valve is permanently housed within the three-way connection block, its function is to allow excess air to escape from the air injection system when the check valves are closed The relief valve prevents damage to the pump vanes and excess exhaust temperatures under extreme operating conditions.

If it becomes necessary to remove the pressure relief valve three-way connection block, slacken the worm drive clips on the three connecting hoses and withdraw the assembly.

To test the pressure relief valve, blank off the two connections for the check valves and apply pressure to the connection from the pump; ensure that the relief valve operates within the following acceptable limits.

0,5 kg./sq.cm. to 0,6 kg/sq.cm.
(7.4 lb sq in. to 8.4 lb./sq.in.)

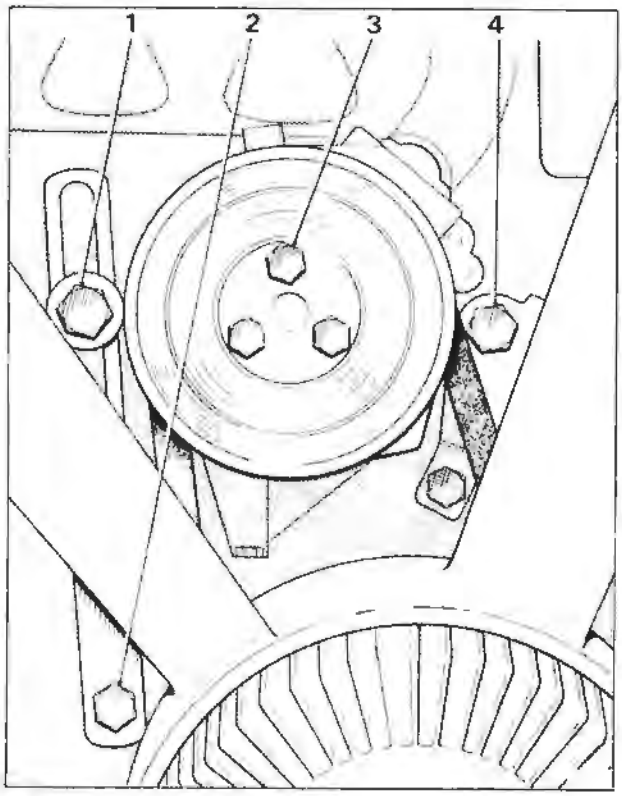

Fig. U7 Air injection pump

1 Adjustment strut upper setscrew
2 Adjustment strut pivot setscrew
3 Pulley retaining setscrews
4 Air pump mounting setscrew

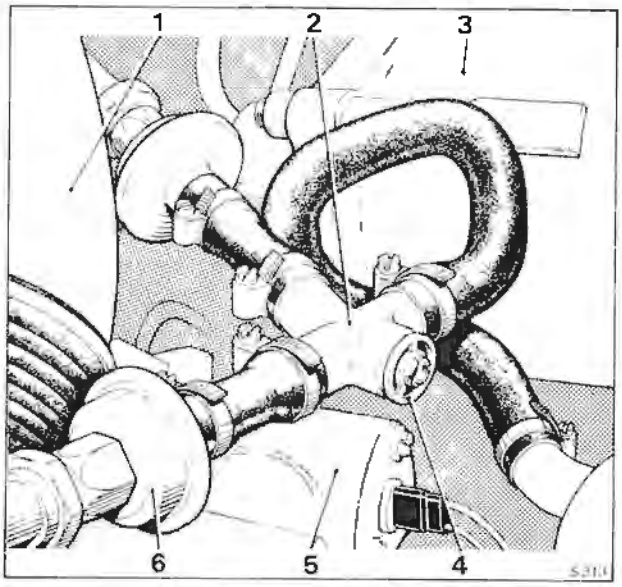

Fig. U8 Three-way connection block

1 Carburetter air intake
2 Three-way connection block
3 Refrigeration compressor
4 Air injection system pressure relief valve
5 Thermostat elbow
6 Check valve

Printed in England

© Rolls-Royce Motors Limited 1977

Exhaust gas recirculation system (E.G.R.) (see Figs. U5 and U9)

A detailed description of the exhaust gas recirculation system (E.G.R.) is given at the beginning of this section.

Distribution pipes

The distribution pipes convey the recirculated exhaust gas from the E.G.R. valve(s) into the carburetter 'tee' piece.

Distribution pipes - To remove

1. Using a 7/16 in. A/F spanner unscrew and remove the two nuts and washers securing the distribution pipes to the E.G.R. valves mounting block.
2. Unscrew the 7/16 in. A/F setscrews retaining the heatshield to 'B' bank air horn; collect the washers.
3. Ease the mounting block rearward to free the joint face; discard the gasket.
4. Support the weight of the distribution pipes.
5. Unscrew and remove the four 2 B.A. setscrews and washers securing the two distribution pipe flanges to the carburetter 'tee' piece.
6. Withdraw the distribution pipes and discard the gaskets.

Distribution pipes - To fit

Fit the distribution pipes by reversing the procedure given for removal, noting the following points

1. Ensure that all joint faces are clean and free from carbon deposits.
2. Coat the joint faces and gaskets at the carburetter 'tee' piece with 'Wellseal'.

Distribution pipes - To clean

1. Remove the distribution pipes as described in Distribution pipes - To remove.
2. With a pointed scraper clean as much carbon deposit as possible from inside the distribution pipes and the joint faces.
3. Using wire brushes complete the cleaning operation on the distribution pipes.
4. With a pointed scraper remove the carbon deposits from the carburetter 'tee' piece connection orifices.
5. Before fitting the distribution pipes thoroughly blow out the pipes and carburetter 'tee' piece connections with compressed air.
6. Fit the distribution pipes as described in Distribution pipes - To fit.

E.G.R. valve(s) (see Fig. U10)

A proportional flow recirculation system is used. Exhaust gas from the balance pipe between the two downtakes of the dual exhaust system passes through a metering orifice and is recirculated into the carburetter 'tee' piece. Atmospheric pressure is maintained downstream of the metering orifice by means of the control valve so that the recirculation flow is proportional to the relative effective areas of the metering orifice and the main exhaust system.

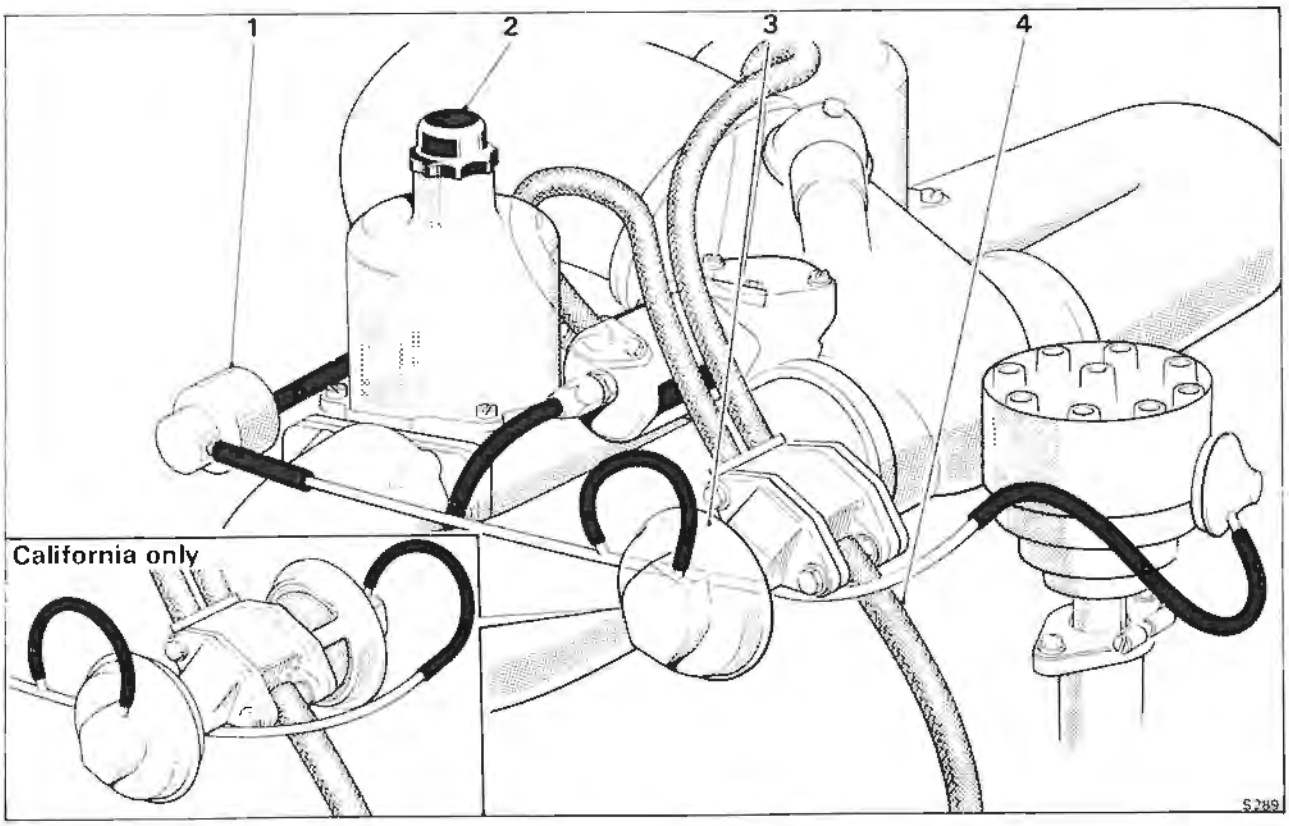

Fig. U9 Exhaust gas recirculation system

1 E.G.R. cut-off solenoid
2 'B' bank carburetter
3 E.G.R. valve(s)
4 E.G.R. feed pipe

Dilution of the inlet charge with exhaust gas lowers the peak combustion temperature and reduces the formation of oxides of nitrogen.

A vacuum operated control valve with integral pressure transducer is used and the metering orifice is incorporated in an extension of the valve seat. A carburetter throttle gated vacuum signal is used to operate the valve. This signal is modulated by the integral transducer valve and applied to the control valve diaphragm so that the control valve lift is adjusted to maintain a constant control pressure, just above atmospheric pressure between the metering orifice and the control valve seat.

When the engine load is increased, the control pressure exceeds the transducer valve setting and the transducer valve closes applying the full vacuum signal to the control valve diaphragm and thus opening the control valve and increasing the E.G.R. flow. Similarly, as the engine load is reduced, the control pressure becomes less than the transducer valve setting and the transducer valve opens, venting the diaphragm chamber to atmosphere and causing the control valve to close and reduce the E.G.R flow. The transducer valve constantly cycles adjusting the control valve lift to maintain a constant control pressure under all normal operation conditions.

The use of a throttle gated vacuum signal ensures complete control valve closure at idle to maintain good idle quality.

To improve starting and drive-away under low temperature conditions a solenoid valve (see Section U7) interrupts the carburetter vacuum signal to the E.G.R. valve until a predetermined coolant temperature is reached.

A micro-switch operated by the throttle lever (see Section U7) also controls this solenoid to provide E.G.R. cut-out at full throttle. At high engine speed the exhaust gas back pressure is high. As a result, the integral transducer valve directs full carburetter vacuum signal to the control valve. At high engine speed under full throttle operation the air intake restriction is sufficient to produce a carburetter vacuum signal large enough to open the control valve, this results in excessive flow under these conditions which would seriously degrade performance and reduce the safety margin for overtaking.

On cars destined for California the exhaust gas recirculation system employs twin metering valves, both having identical calibrations. Other cars are fitted with a single metering valve.

E.G.R. valve(s) - To remove

1. Detach the small diameter rubber hose from the valve.
2. Unscrew and remove the two ½ in. A/F nuts retaining the valve to the mounting flange; collect the two washers.
3. Withdraw the valve and remove the gasket from the mounting flange.

Note

On cars fitted with a twin valve system a similar procedure should be adopted for the additional valve

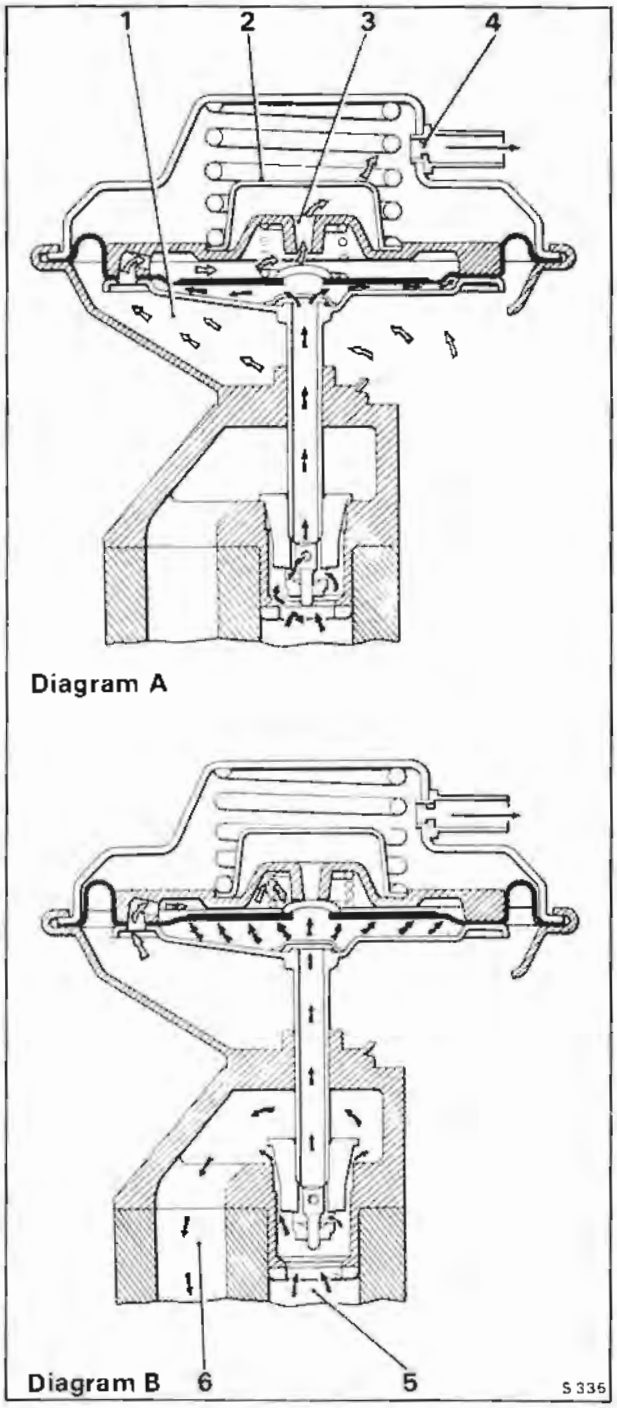

Fig. U10 Exhaust gas recirculation valve

Ambient air ⇦
Exhaust gas ⬅

Diagram A - Exhaust pressure below operating value

1 Ambient air
2 Air filter
3 Air bleed
4 Restrictor

Diagram B - Exhaust pressure above operating value

5 Exhaust gas from balance pipe
6 Exhaust gas to carburetter 'tee' piece

Printed in England
© Rolls-Royce Motors Limited 1979
November 1979
T.S.D. 4200
(USA & Canada 1978 Model year)

E.G.R. valve(s) - To fit
Fit the valve(s) by reversing the procedure for removal, noting the following points.
1. Ensure that the valve pintle (see Fig. U10) is secure on the valve stem.
2. Ensure that the valve and mounting flange joint faces are clean and free from carbon deposits.
3. Always use a new mounting flange gasket.

E.G.R. valve(s) - To clean
1. Remove the valve(s) as described in E.G.R. valve(s) - To remove.
2. Using a scraper, remove all carbon film from the valve and mounting flange faces; complete the operation with a wire brush.
3. Clean the carbon from the valve using a wire brush fitted into a portable drill. Take care not to damage the valve seating area.
4. Thoroughly blow out the valve with compressed air to ensure that all loose carbon particles are removed
5. Upon completion of the cleaning operations, fit the valve to the engine mounting flange as described in E.G.R. valve(s) - To fit.

E.G.R. valve(s) To check
The E.G.R. system is automatically controlled by exhaust backpressure to maintain a constant E.G.R. proportion over normal road load conditions. Checks to ensure the correct operation of the valve(s) are only required under no load condition as follows.

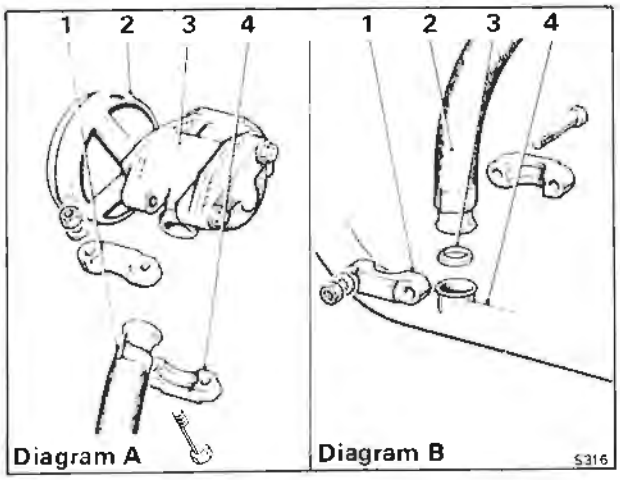

Fig. U11 E.G.R. feed pipe joints
Diagram A - Upper joint
1 Feed pipe
2 E.G.R. valve
3 E.G.R. valve mounting block
4 Clamp bracket
Diagram B - Lower joint
1 Clamp bracket
2 Feed pipe
3 Sealing ring
4 Exhaust balance pipe

1. Connect an electric impulse tachometer to the engine in accordance with the manufacturer's instructions.
2. Ensure that the parking brake is firmly applied and that the gear range selector is in the Park position.
3. Ensure that the pressure tapping cap fitted to the weakening device is correctly tightened.
Start and run the engine until normal operating temperature is attained.
4. Ensure that the engine has run for at least 25 mins. after the engine coolant thermostat has opened.
5. Allow the engine to return to the idle speed.
6. Increase the engine speed slowly noting the operation of the E.G.R. valve(s).
7. The E.G.R. valve(s) should commence to open at the following engine speeds.
All territories (except California)
700 r.p.m. to 1 000 r.p.m.
California
700 r.p.m. to 950 r.p.m.

If the valve(s) either fail to open or open late check for the following possible causes.
a. Failed E.G.R. cut-out switch (see Section U7).
b. Failed E.G.R. cut-off solenoid (see Section U7).
c. Failed E.G.R. full throttle cut-out micro-switch (see Section U7).
d. Leak or blockage in the carburetter signal pipe to weakening device cut-off solenoid.
e. Leak or blockage in the E.G.R. valve signal pipe or hose from the E.G.R. cut-out solenoid to the E.G.R. valve(s).
f. Advanced ignition timing (see Section U6).
g. Sealing rings incorrectly fitted (see Catalytic converter - To fit).
If the valve(s) begin to open early check for the following possible cause.
a. Retarded ignition timing (see Section U6).
8. If the E.G.R. valve(s) do not function correctly after carrying out Operations 1 to 7 inclusive, replace the offending valve(s) with new units.
9. Carry out Operations 1 to 7 inclusive

E.G.R. feed pipe (see Fig. U5)
The E.G.R. feed pipe conveys exhaust gas that is to be recirculated from the exhaust balance pipe to the exhaust gas recirculation valve(s).

E.G.R. feed pipe - To remove
1. Unscrew the two 7/16 in. A.F nuts from the clamp at the upper end of the feed pipe (see Fig. U11).
2. Collect the two washers and 'split' the clamp from the spherical joint.
3. Repeat Operations 1 and 2 on the lower joint adjacent to the exhaust system balance pipe.

E.G.R. feed pipe - To fit
Fit the E.G.R. feed pipe by reversing the procedure given for removal, noting the following.
1. Ensure that the joint faces are clean and free from carbon deposits.

Printed in England
© Rolls-Royce Motors Limited 1977
June 1977
T.S.D. 4200
(USA & Canada)

E.G.R. valve(s) heatshield - To remove

1. Slacken the two forward ½ in. A/F nuts one on either side of the mounting flange.
2. Unscrew and remove the two 7/16 in. A/F set-screws retaining the heatshield to the rear of 'B' bank air horn; collect the washers.
3. Ease the assembly forward to release the heatshield slots from the retaining studs.
4. Withdraw the heatshield.

E.G.R. valve(s) heatshield - To fit

Fit the heatshield by reversing the procedure given for removal.

Oxidation catalyst system (see Figs. U5 and U12)

A dual exhaust system is used. The catalytic converters are situated in the forward underfloor area, in place of the conventional front silencers (see Fig. U5).

Each converter contains two catalyst blocks of unequal length and has sufficient volume to perform the dual functions of converter and silencer (see Fig. U12). Two converters are fitted to each car, one for each bank of the engine cylinders.

A platinum group metal catalyst on a ceramic monolith support has been chosen for optimum conversion efficiency and rapid warm-up. Two separate blocks are used to minimise the effect of thermal shock and these are positioned to give good gas distribution and effective utilisation of the catalyst volume.

The catalyst promotes the reaction between the residual hydrocarbons and carbon monoxide in the exhaust and the secondary air injected into the exhaust ports.

Catalytic converter protection

To protect the catalytic converter from possible damage the following precautions should always be observed.

Unleaded gasoline

Use unleaded gasoline only (91 RON Min.). The use of leaded gasoline will result in a substantial reduction in the performance of the catalyst. Under no circumstances add fuel system cleaning agents to either the fuel tank or carburetters for induction into the engine, as these materials may have a detrimental effect on the catalytic converter.

Fuel

Do not allow the vehicle to run out of fuel. If the vehicle does run out of fuel at a high speed, possible damage to the catalyst could result.

Engine malfunction

If the engine misfires or suffers from a lack of power which could be attributed to a malfunction of either the ignition or fuel systems, the vehicle should be driven only at low speed and the fault rectified as soon as possible. Driving at high speeds with a malfunction in either of these systems could cause over-heating and consequent damage to the catalyst.

Catalytic converter To remove

1. Remove the screws retaining the relevant section(s) of the grass-fire shields below the catalytic converter.

Note

Take care when removing the shields as the sharp edges could cause injury to the operators hands.

2. Using a 9/16 in. A/F spanner, slacken the nuts on the spherical joint clamps immediately to the front and rear of the catalytic converter.
3. Support the weight of the catalytic converter and remove the nuts from the spherical joint clamps. Dismantle and remove the clamps.
4. Withdraw the catalytic converter and collect the spherical sealing rings from between the pipe connections.

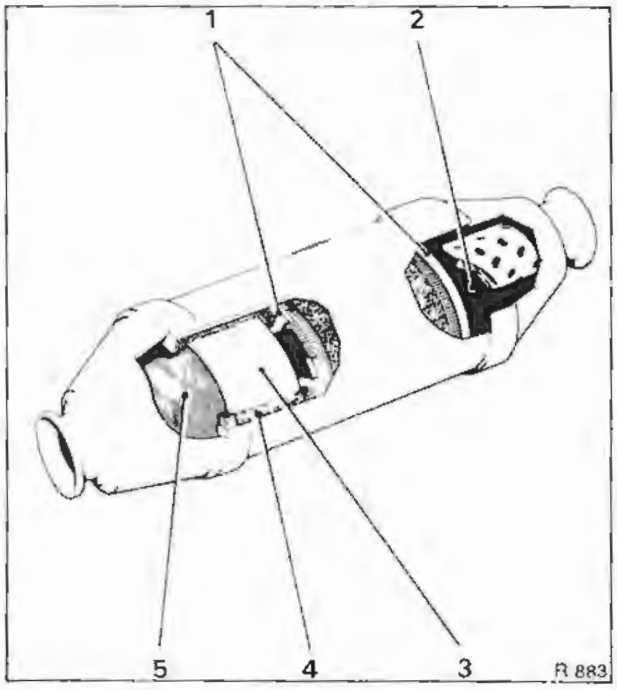

Fig. U12 Catalytic converter assembly

1 Stainless steel mesh retaining rings
2 Silencing chamber
3 Fireclay coating
4 Stainless steel mesh
5 Monolithic catalyst

Catalytic converter - To fit

Fit a catalytic converter by reversing the procedure given for removal, noting the following.

1. The seal rings and pipe flares must be thoroughly clean and free from scale and may be lightly dressed with fine emery cloth if required.
2. The clamp bolt threads should be lightly oiled to prevent binding during assembly and the spherical faces of the sealing rings and the grooves in the clamps should be smeared with a graphite lubricant, to ensure correct alignment of the pieces on assembly.
3. Fit the catalytic converter assembly complete with seal rings, then loosely fit the joint clamps.

Note

The catalytic converter assembly should be fitted with the square shaped catalyst cells (visible when looking along the short pipe into the catalytic converter assembly) towards the front of the vehicle and the perforated tube (visible when looking along the short pipe into the catalytic converter assembly) towards the rear of vehicle.

The sealing rings should be fitted between the pipe connections so that the sealing ring with the smaller diameter hole in the centre is fitted to the rear of the catalytic converter assembly.

Printed in England
© Rolls-Royce Motors Limited 1977

Section U3

Fuel evaporative emission control system

The Fuel Evaporative Emission Control System eliminates direct venting of the fuel system, thus preventing the release of unburnt hydrocarbons into the atmosphere.

Vapour from the fuel system is collected and stored in a charcoal filled canister. The canister is purged whenever the engine is running and the stored fuel vapour is extracted from the charcoal and burnt in the engine.

The system is illustrated in Figure U13 and comprises the following main components.

Canister (see Fig. U14)
Carbon granules (charcoal)
Float chamber connection
Fuel tank connection
Polyurethane air filter
Purge line connection
Weakening device connection

Fuel tank (see Fig. U16)
Expansion tank
Filler cap (combined pressure/vacuum relief valve)
Rollover valve

Purge line (see Fig. U13)
Air filter
Restrictor

Weakening device (see Figs. U23 and U24)
Adjustable orifice
Air filter
Anti 'run-on' solenoid
Cut-off solenoid
Cut-out switch
Float chamber drain valve
Float chamber vent valve
Fuel receiver chamber
Non-return valves
Venturi chamber

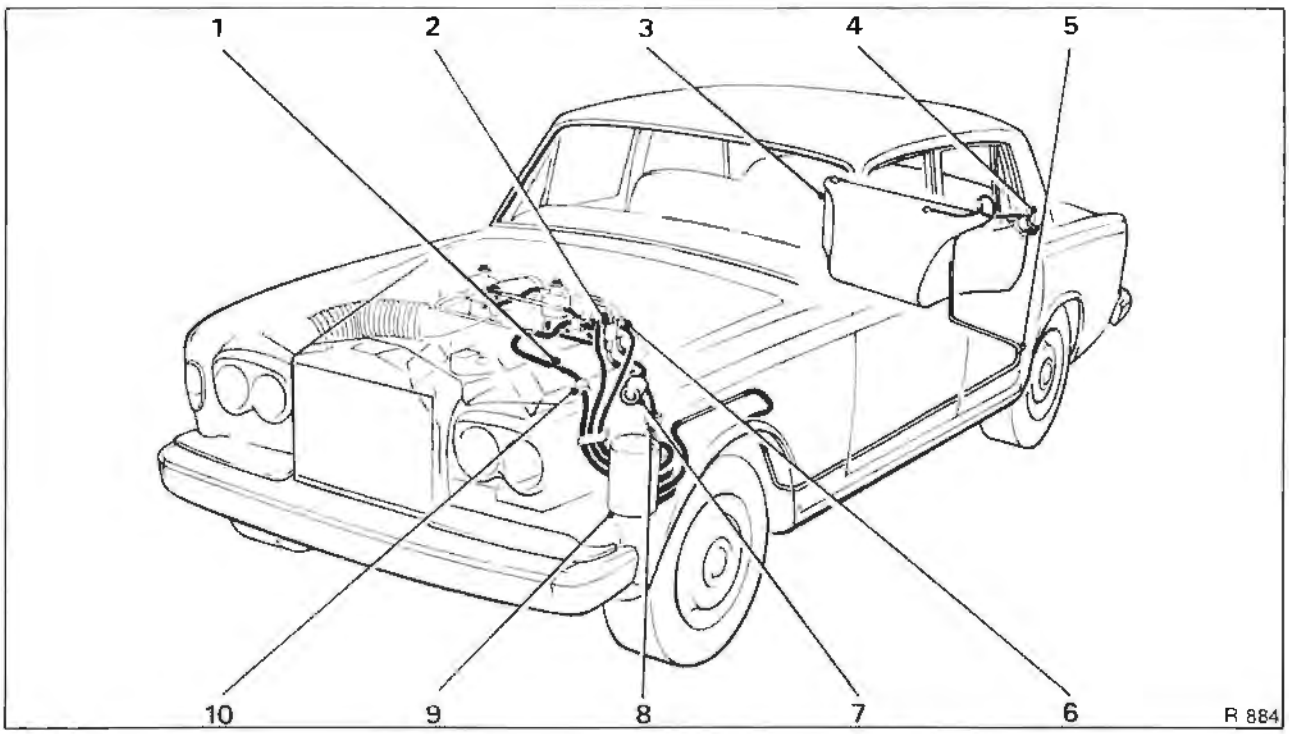

Fig. U13 Fuel evaporation emission control system

1 Purge line restrictor
2 Float chamber vent valve
3 Fuel tank
4 Fuel filler
5 Fuel vapour line
6 Weakening device
7 Weakening device filter
8 Float chamber drain valve
9 Evaporation loss control canister
10 Purge line filter

June 1977
T.S.D. 4200
(USA & Canada

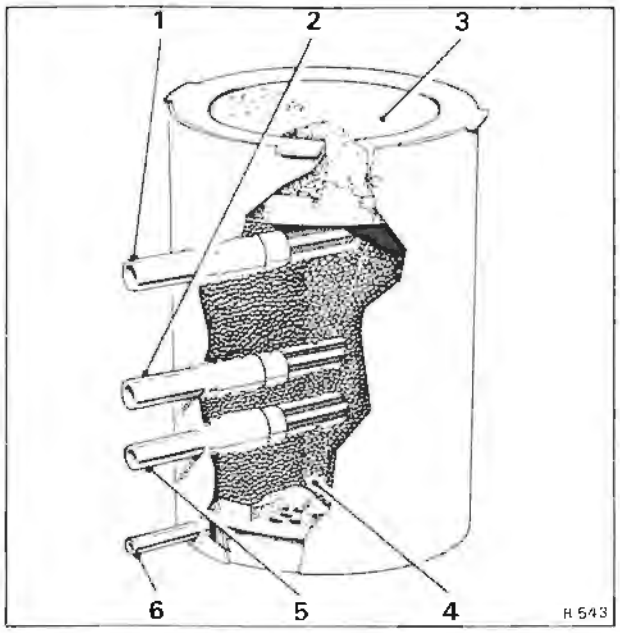

Fig. U14 Control canister
1 Weakening device connection
2 Float chamber vent connection
3 Polyurethane filter
4 Carbon
5 Fuel tank vent connection
6 Purge line connection

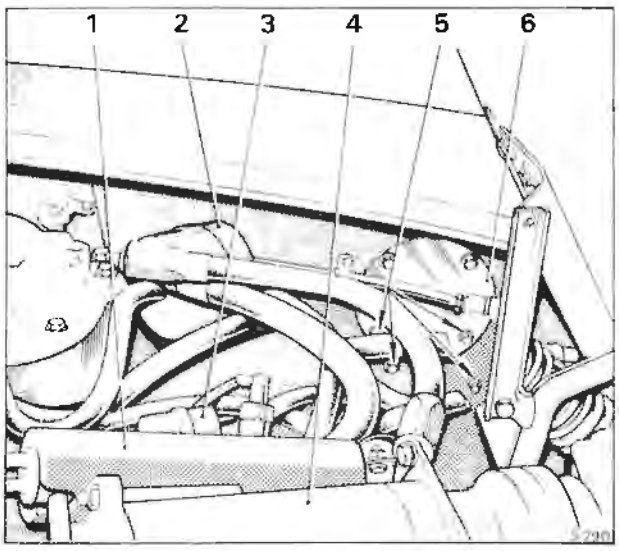

Fig. U15 Foam filter access cover, purge line filter and weakening device filter
1 Fuel cooler
2 Weakening device filter
3 Purge line filter
4 Refrigeration compressor
5 Canister securing setscrews
6 Foam filter access cover

For details of the servicing and maintenance requirements of the Fuel Evaporative Emission Control System, refer to the Service Schedules Manual - T.S.D. 4117.

Control canister (see Figs. U13 and U14)
The evaporative emission control canister is situated under the left-hand front wing. It is a cylindrical container filled with activated carbon granules which adsorb and retain fuel vapour There are connections for the mixture weakening device vent, the fuel receiver vent, the fuel tank vent and the purge line. The top of the canister is open to atmosphere and contains a Polyurethane foam filter element.

When the engine is running, air is drawn from the atmosphere through the foam filter element and carbon granules to the lowest connection on the canister. The air, containing fuel vapour from the carbon granules then passes into the engine via the purge line

Control canister - To remove
1 Remove the front left-hand road wheel as described in Chapter R
Note
Left-hand is determined when viewed from the driver's seat
2 Remove the front section of the underwing sheet by unscrewing the small screws situated around the outer edge of the sheet Resistance may be experienced when the sheet is being freed, as it is sealed around the edge with Bostik Sealing Compound 771.
3. The canister will be clearly visible towards the front of the vehicle.
4. Using the special pliers (RH 8090), remove the steel retaining clips from the four hose connections to the canister. Label the hoses to facilitate identification and withdraw the four hose from the canister.
5. Raise the bonnet and from inside the engine compartment locate the canister foam filter access cover (see Fig. U15).
6. Unscrew and remove the four setscrews indicated as securing setscrews in Figure U15. Before removing the final setscrew support the control canister.
7. Withdraw the canister from beneath the wing

Control canister - To fit
Fit the canister by reversing the procedure described for removal, noting the following points.
1. Ensure that the rubber hoses are in a good condition and new hose retaining clips are fitted.
2. Ensure that the underwing sheet is sealed with Bostik Sealing Compound 771.

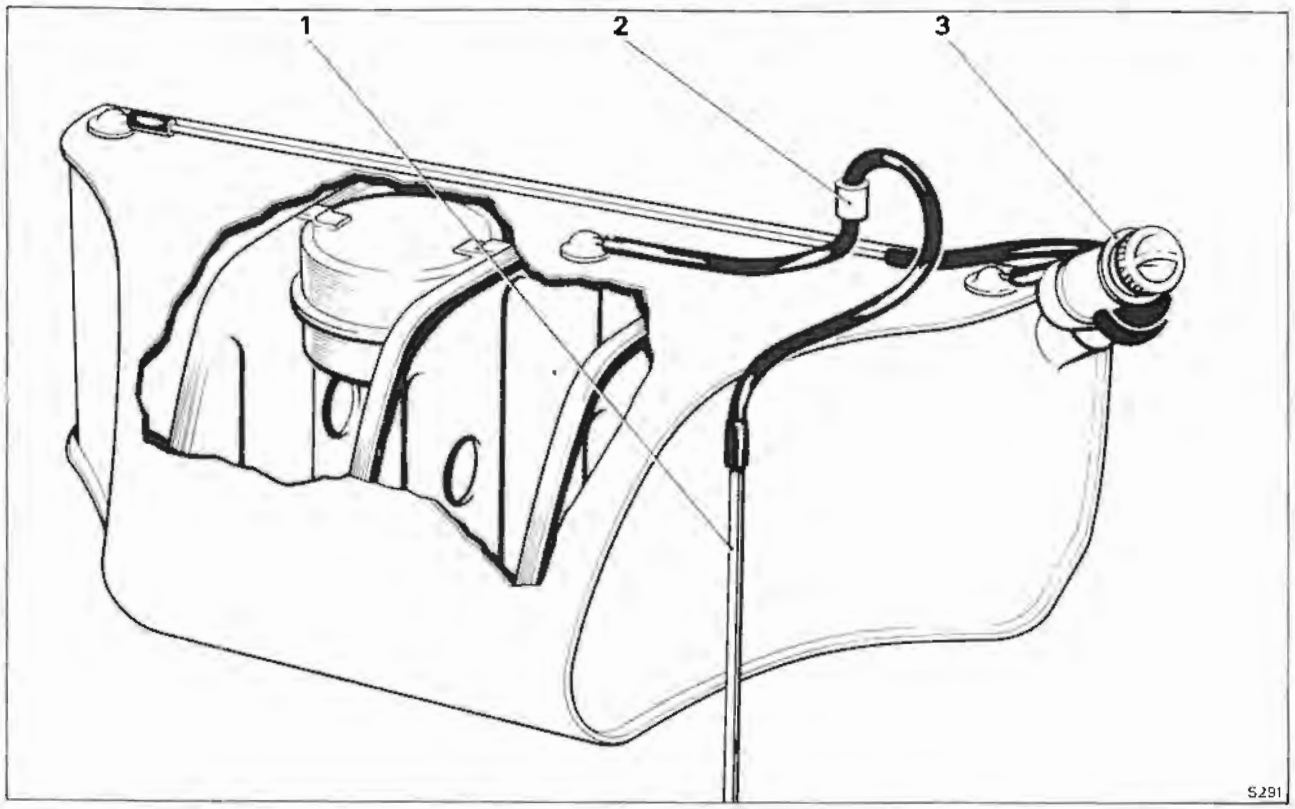

Fig. U16 Fuel tank
1 Fuel vapour line
2 Rollover valve
3 Fuel filler cap (incorporating combined pressure and vacuum relief valve)

Polyurethane foam filter element - To renew
It is not necessary to remove the canister from the car in order to extract the polyurethane foam filter element. A detachable cover is situated in the left-hand valance (see Fig. U15).
1. Unscrew the four screws retaining the access cover, lift off the cover and withdraw the filter element from the top of the canister.

When fitting a new element, ensure that it is correctly positioned inside the retaining rim of the canister. Fit the access cover and tighten the setscrews.

Fuel tank (see Fig. U16)
The fuel tank is fitted at the forward end of the luggage compartment behind the carpet covered sealing panel (see Fig. U17).

The fuel tank is vented via two connections to the filler neck which allows adequate venting of the tank when it is being filled.

A separate vapour line from the fuel tank passes via a rollover valve (situated on the top of the fuel tank), under the floor on the left-hand side of the car to the evaporative loss control canister.

The rollover valve prevents fuel from entering the evaporative emission control canister during harsh manoeuvres or in the event of vehicle inversion. Fuel vapour passes freely through the valve.

In the event of a blockage in the vapour line to the evaporative loss control canister, a combined pressure and vacuum relief valve in the fuel filler cap prevents any excessive build-up of pressure due to fuel vapourisation or depression as the fuel is consumed.

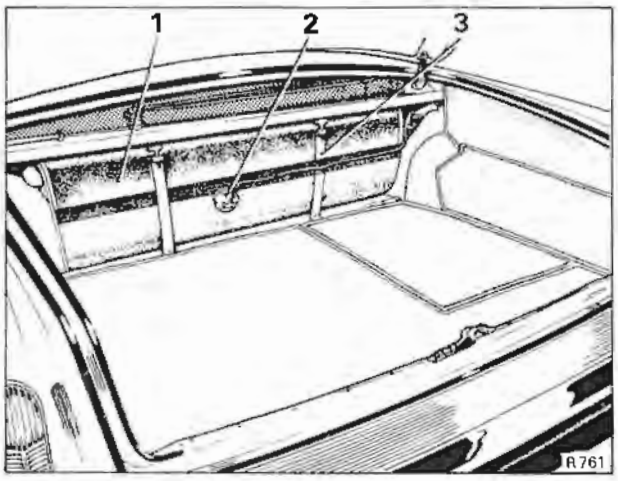

Fig. U17 Position of fuel tank
1 Fuel tank
2 Gauge unit
3 Retaining strap

Printed in England
© Rolls-Royce Motors Limited 1977
June 1977
S.D. 4200
USA & Canada)

An expansion tank situated within the main fuel tank inhibits complete filling and thereby provides fuel expansion volume to cope with extreme temperature conditions.

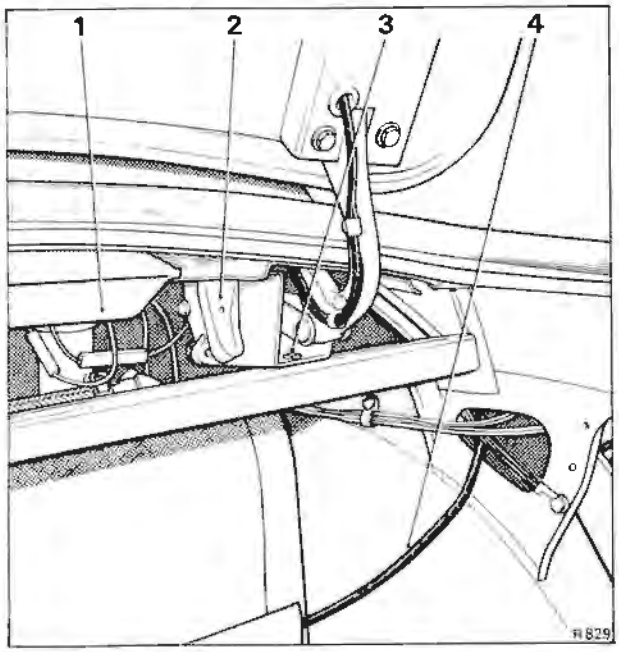

Fig. U18 Luggage compartment lid hinge assembly
1 Interior ventilation duct
2 Hinge assembly
3 Crossmember retaining bolt
4 Gauge unit loom

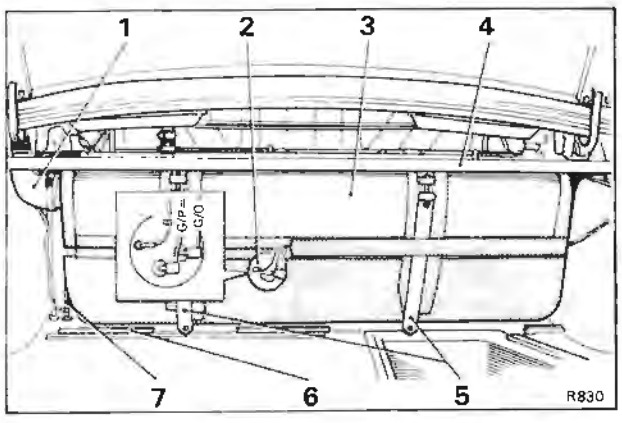

Fig. U19 Fuel tank fittings
1 Fuel filler hose
2 Gauge unit
3 Soundproofing panel
4 Crossmember
5 Securing straps
6 Carpet runner slots
7 Metal pipe (to evaporative loss control canister)

Fuel tank - To remove

1. Disconnect the battery.

2. Drain the fuel from the tank; this is best achieved by disconnecting the fuel pipe from the tank to the filter at the filter end.

Fit the fuel pipe to the fuel filter.

3. Unscrew the four 'Pozidrive' screws situated across the carpet covered sealing panel. Remove the screws and collect the washers.

4. Withdraw the carpet covered sealing panel to reveal the fuel tank assembly.

5. Unscrew the worm drive clip securing the roll-over valve assembly to the crossmember. Detach the rollover valve from the crossmember.

6. Remove the crossmember (see Figs. U18 and U19); this is secured by a 7/16 in. A/F nut, bolt and washer to the bottom of each luggage compartment lid hinge assembly.

7. Disconnect the three electrical cables from the fuel tank level gauge (see Fig. U19).

8. Remove the tape from the electrical loom by peeling it back from the fuel tank. Tape the electrical loom away from the vacinity of the fuel tank.

9. Unscrew the worm drive clips securing the three rubber vent hoses to their respective connections on the fuel tank (see Fig. U20); withdraw the hoses.

10. Unscrew the worm drive clip securing the rubber filler neck hose to the fuel tank (see Fig. U19); withdraw the hose.

Blank off the fuel tank connection.

11. From beneath the car, unscrew and detach the fuel pipes. Each connection is an olive and threaded union. Label the pipes to facilitate assembly.

Blank off the fuel tank connections.

12. Unlock and unscrew the half-nut from each of the two tank retaining strap bolts (see Fig. U20).

13. Unscrew the full nut from each of the two tank retaining strap bolts (see Fig. U20).

14. Withdraw the bolts and collect the four bridge pieces from the end of the retaining straps (see Fig. U20).

15. Bend the retaining straps and carefully withdraw the fuel tank assembly.

Fuel tank - To fit

1. Sweep clean the forward end of the luggage compartment, between the road spring pots.

If blanking plugs, nuts, washers, etc., remain in this area when the fuel tank is fitted, they could become the cause of noise which may prove difficult to eradicate once the fuel tank is in position.

Also, ensure that the battery is disconnected and the usual standard workshop precautions carried out.

2. Ensure that the self-tapping screws that secure the pipe retaining clips beneath the car do not protrude to far into the luggage compartment. Extra long self-tapping screws could puncture the fuel tank.

3. Position the strips of 'Compriband' in position. Also fit the 'Compriband' pad around the hole in the luggage compartment floor.

The 'Compriband' and the two rubber blocks [that fit approximately 5,08 cm. (2.0 in.) above the luggage compartment floor on the panel dividing the compartment from the car interior] should be secured in position using an appropriate adhesive such as 'Dunlop S81'.

The position of all mounting strips are shown in Figure U21.

4. Fit the four fuel tank securing straps to the body (see Fig. U21). The two upper mountings are similar and are shown in Figure U21 - inset A. The two lower mountings are different, the left-hand mounting is shown in Figure U21 - inset B, where the bolt passes through the body and is retained by a nut. The right-hand mount is shown in Figure U21 - inset C, where the bolt has a distance piece and screws directly into a threaded bush attached to the body.

5. Fit the 4.8 mm. (3/16 in.) internal diameter rubber hose to the metal pipe situated on the left-hand side of the luggage compartment, adjacent to the panel dividing the luggage compartment from the car interior (see Fig. U19).

Temporarily attach the open end of the rubber hose high in the luggage compartment so that it will be above the fuel tank.

6. Fit the soundproofing panel to the fuel tank and secure in position with tape (see Fig. U19). In addition, fit two pieces of tape around the fuel tank so that the securing straps will sit on the tape when the tank is secured in position (see Fig. U19).

7. Bend the securing straps to enable the fuel tank to be fitted.

8. Fit the fuel tank into position, ensuring that the boss on the base of the tank fits into the hole in the luggage compartment floor.

9. Secure the fuel tank in position as follows (see Fig. U19).

10. Fit a bridge piece to the end of each securing strap and secure the fuel tank in position by fitting a long 3/16 in. A/F bolt, downwards, through the upper and lower securing strap bridge pieces. Screw a full nut onto the bolt.

11. Repeat Operation 10 to the second set of securing straps.

12. Tighten the full nut of each set of securing straps and lock in position by fitting an additional half nut to each of the two bolts.

13. From beneath the car fit the fuel pipes to the fuel tank, each connection is provided by an olive and a threaded union.

14. Fit the rubber intake pipe to the fuel tank neck and secure the end of the hose with a worm drive clip.

15. Fit the two 8,0 mm. (5/16 in.) internal diameter rubber hoses of the fuel intake assembly to the fuel tank vents. One hose connects directly to the vent, whilst the second hose, connects to the vent on the other side of the fuel tank via a metal pipe which is fitted across the top of the tank (see Fig. U20).

Secure the ends of the hoses with worm drive clips.

16. Fit the open end of the 4,8 mm. (3/16 in.) diameter hose referred to in Operation 5 to the top of the rollover valve assembly. Fit an 8,0 mm. (5/16 in.) internal diameter hose between the centre vent in the top of the fuel tank and the bottom connection of the rollover valve (see Fig. U20).

Secure the ends of the hose with worm drive clips.

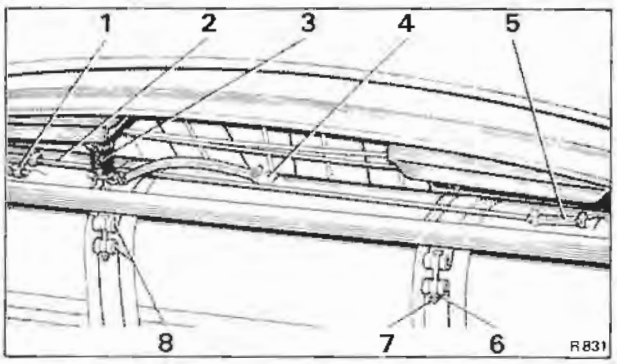

Fig. U20 Fuel tank vent connections

1 Vent-filler neck
2 Fuel tank vent metal pipe
3 Rollover valve
4 Vent-rollover valve
5 Vent-filler neck
6 Full nut
7 Half nut (lock-nut)
8 Bridge pieces

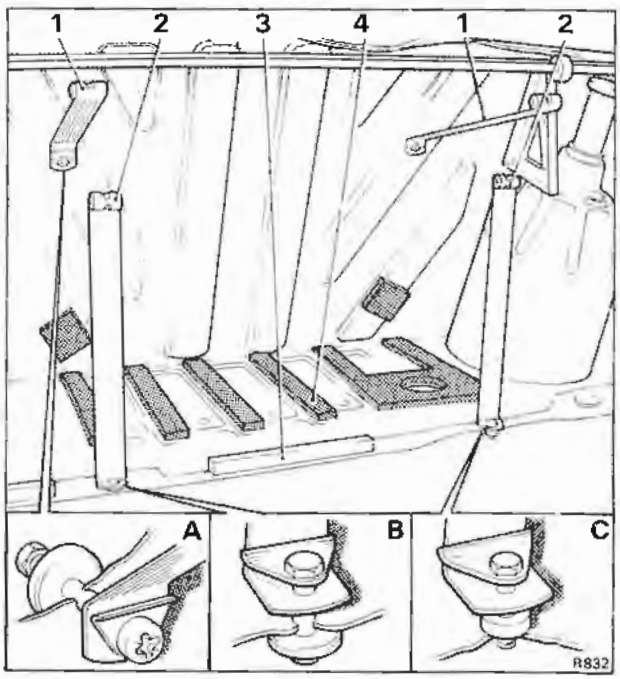

Fig. U21 Luggage compartment - Fuel tank fittings

1 Upper securing straps
2 Lower securing straps
3 Carpet runner slots
4 'Compriband' rubber

Printed in England
© Rolls-Royce Motors Limited 1977

17. Fit the crossmember (see Fig. U19), attaching it to the bottom bracket of each of the two luggage compartment lid hinge assemblies with a 7/16 in. A/F bolt, washer and nut (see Fig. U18).
18. Locate the fuel gauge sender unit electrical loom situated above the right-hand rear wheel arch, there are three cables in the loom and these are coloured black, green/orange and green/purple.

Tape the cables across the fuel tank until they are adjacent to the fuel gauge sender unit, as shown in Figure U19.
19. Connect the cables to the fuel gauge sender unit as shown in the inset of Figure U19.
20. Locate the base of the carpet covered panel into the wooden runner slots (see Fig. U19) and secure the top of the panel with four 'Pozidrive' screws and washers to the crossmember.
21. Connect the battery.

Fuel filler - To remove (Saloon cars)
1. Disconnect the battery.
2. Unscrew and remove the four 'Pozidrive' screws situated across the carpet covered sealing panel at the forward end of the luggage compartment.
3. Withdraw the carpet covered sealing panel to reveal the fuel tank assembly.

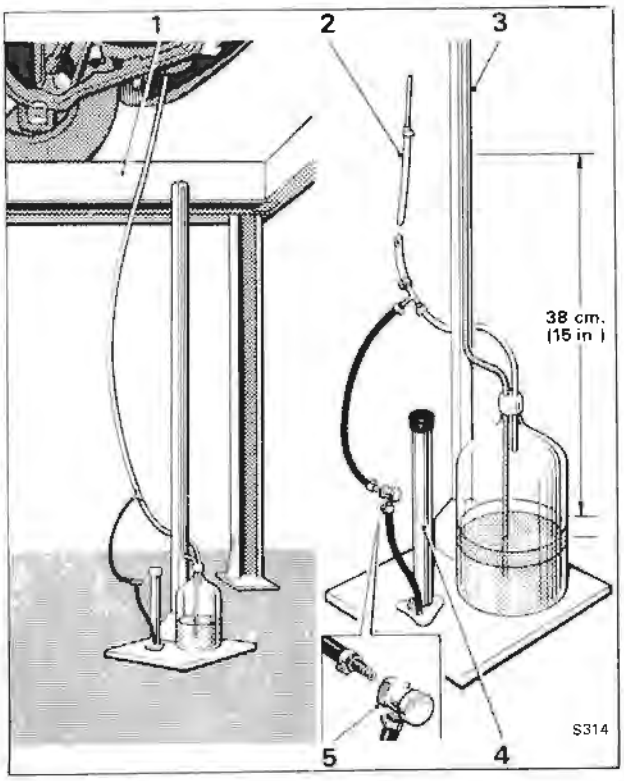

Fig. U22 Leak check test equipment
1 Ramp
2 Connection to fuel tank/canister hose
3 Test equipment
4 Pump
5 One way pressure valve

4. Unscrew the worm drive clips securing the two 8,0 mm. (5/16 in.) internal diameter rubber hoses to the two outer vents on the top of the fuel tank, one hose fits directly onto a vent while the other hose fits to a metal pipe which extends across the width of the fuel tank; withdraw the hoses.
5. Unscrew the worm drive clip securing the fuel inlet hose to the fuel tank; withdraw the hose and blank off the fuel tank inlet.
6. From inside the car remove the trim panel that covers the filler assembly, this is situated adjacent to the rear window.

On four door saloons (except Long Wheelbase Saloons with the small rear window) unscrew the two screws from the wood finisher fitted around the rear window. Carefully withdraw the trim panel to reveal the upper connection for the fuel filler.
7. Unscrew the worm drive clip securing the fuel filler hose to the fuel filler head. Withdraw the fuel filler neck assembly downwards into the luggage compartment.
8. Open the fuel filler flap, unscrew and remove the fuel filler cap.
9. Using a screwdriver, unscrew and remove the six screws securing the fuel filler head to the body, collect the washers from the retaining screws and withdraw the fuel filler head assembly.

Fuel filler - To fit (Saloon cars)
Fit the fuel filler assembly by reversing the procedure given for removal, noting the following.
1. When fitting the fuel filler head to the body ensure that the restrictor is in its lowest position

Fuel filler - To remove (Convertible cars)
1. Remove the carpet covered sealing panel from the forward end of the luggage compartment.
2. Locate the fuel filler neck assembly situated on the left-hand side of the fuel tank.
3. Disconnect the two rubber hoses from the outer vents on top of the fuel tank.
4. Unscrew the upper and lower worm drive clips from the fuel filler neck assembly, withdraw the assembly and blank off the fuel tank.
5. Open the fuel filler flap and unscrew the fuel filler cap.
6. Using a screwdriver, unscrew and remove the six screws securing the fuel filler head to the body, collect the washers from beneath the heads of the screws. Withdraw the assembly.

Fuel filler - To fit (Convertible cars)
Fit the fuel filler assembly by reversing the procedure given for removal.

Fuel evaporative emission control system - To leak check
Whenever the various pipes, hoses and components of the fuel evaporative emission control system are disturbed, the system should be checked for air leaks upon assembly.

To test the system proceed as follows.
1. Position the vehicle on a ramp and carry out the usual safety precautions (i.e. ensure that the gear range selector lever is in 'Park' position, the parking brake firmly applied, the engine switched off, etc.,). Raise the ramp.
2. Remove the left-hand horn assembly (left-hand is decided when standing under the vehicle, looking towards the front), see Chapter M.
3. Through the resultant gap between the front wing and wing sheet, locate the emission control canister and identify the hose connection from the fuel tank (second from the bottom).
4. Using the special pliers (RH 8090), remove the steel retaining clip from the fuel tank connection hose at the control canister.
5. The fuel tank hose should be detached from the canister and connected to the test equipment (see Fig. U22).
6. Apply air pressure to the fuel tank hose via the test equipment until a reading of 38 cm. (15 in.) H_2O is attained and close the pressure supply.
7. After 5 minutes again check the pressure reading, this should not have fallen by more than 12,7 mm. (0.5 in.).
8. If the pressure drop is more than 12,7 mm. (0.5 in.), progressively treat all joints in the system with soap solution to detect air leaks.
9. Rectify any air leaks and again leak check the system.
10. When the system is satisfactory, detach the test equipment and connect the hose to the control canister secure with a new steel retaining clip.
11. Fit the left-hand horn assembly as described in Chapter M.

Purge line

The purge line consists of a rubber hose, passing from the lowest connection on the canister through the valance junction piece to the induction manifold connection on the opposite side of the engine (see Fig. U13). Incorporated into this hose is the purge line filter and restrictor.

When the engine is running, air drawn through the canister filter and carbon picks up the stored fuel vapours and passes them via the hoses, to the induction system at a point just below the choke housing. The restrictor in the line controls the flow rate at between 1,41 cu.m. per hr. and 1,98 cu m. per hr. (50 cu.ft. per hr. and 70 cu.ft. per hr.) to maintain carburetter metering accuracy and the paper element line filter is fitted to prevent blockage of the restrictor.

Purge line filter

The purge line filter is situated on the left-hand valance just forward of the front road spring pot (see Fig. U15). The air filter assembly is a sealed unit and no attempt should be made to clean the element.

At the mileage intervals specified in the Service Schedules the purge line filter should be removed and a new assembly fitted as follows.

Purge line filter - To remove
1. Using the special pliers (RH 8090) remove the two steel retaining clips situated one on either side of the filter assembly.
2. Detach the inlet and outlet hoses.
3. Slacken the small setscrew that secures the clamp bracket around the filter assembly.
4. Swivel the clamp bracket to enable the filter assembly to be withdrawn.

Purge line filter - To fit
Fit the purge line filter by reversing the procedure given for removal, noting the following points
1. Ensure that the filter assembly is fitted the correct way around; the word 'IN' moulded into the end of the casing should be towards the front of the vehicle.
2. Ensure that the rubber hoses are in a good condition and that new hose retaining clips are used.

Purge line restrictor
The purge line restrictor is situated in the purge line between the air filter and the induction manifold connection (see Fig. U13) The function of the restrictor is to maintain the air flow through the purge line within predetermined limits.

Purge line restrictor - To remove
1. Hold the restrictor firmly and slide the rubber hosing from both ends.

Purge line restrictor - To fit
Fit the restrictor by reversing the procedure given for removal, noting the following point.
1. Ensure that the purge line restrictor is fitted into the line correctly. This can be determined by comparing the diameters of the restrictor ends with those of the rubber hoses.

Purge flow rate To check
1. Disconnect the hose from the engine side of the purge line filter and insert a flowmeter assembly (RH 8725) into the line between the filter and the restrictor. The flowmeter is a rotameter type capable of measuring between 1,4 cu.m /hr. and 2,0 cu.m./hr. (50 cu.ft /hr. and 70 cu.ft /hr.). The pressure drop across the meter must not exceed 5,08 cm.Hg. (2.0 in.Hg.).
2. Start and run the engine at 650 r.p.m.; the reading on the flowmeter should be between 1,41 cu.m /hr. and 1,99 cu.m /hr. (50 cu.ft /hr. and 70 cu.ft /hr.).
3. If the flow is less than the minimum figure quoted in Operation 2, stop the engine and substitute the purge line restrictor with a straight piece of metal pipe having an internal diameter larger than 4,76 mm. (0.187 in.).

Printed in England
© Rolls-Royce Motors Limited 1977
June 1977
T.S.D. 4200
(USA & Canada)

4. Start and run the engine at 650 r.p.m.; the reading on the flowmeter should be in excess of 1,99 cu.m /hr. (70 cu.ft /hr.).
5a. If the flowmeter reading is above 1,99 cu.m /hr. (70 cu.ft /hr.) fit a new purge line restrictor and repeat Operation 2.
b. If the flowmeter reading is below 1,99 cu.m/hr. (70 cu.ft/hr.) the cause could be as follows.
(i) An air leak in any of the vacuum hoses that connect to the induction manifold connection (vacuum manifold).
(ii) A blockage in the vacuum manifold or any of the connecting hoses.

Any leaks or blockages should be rectified; the restrictor should be fitted and Operation 2 repeated. If the flow rate is still incorrect fit a new restrictor and again, repeat Operation 2.
6. Remove the test equipment and connect the hose to the purge line filter.

Weakening device

The mixture weakening device (see Fig. U23) is fitted adjacent to 'B' bank carburetter and incorporates a fuel receiver

For any given position of the fuel metering needle, the rate of the discharge from the carburetters is governed by the difference in air pressure existing over the fuel in the float chamber and that over the jet.

The weakening device is designed to reduce the air pressure (create a depression) in the float chamber at part throttle, thereby reducing the rate of discharge from the jet.

The weakening device housing contains two chambers (see Fig. U24), the venturi chamber, and the fuel receiver chamber, the two being interconnected by a passage and an adjustable venturi.

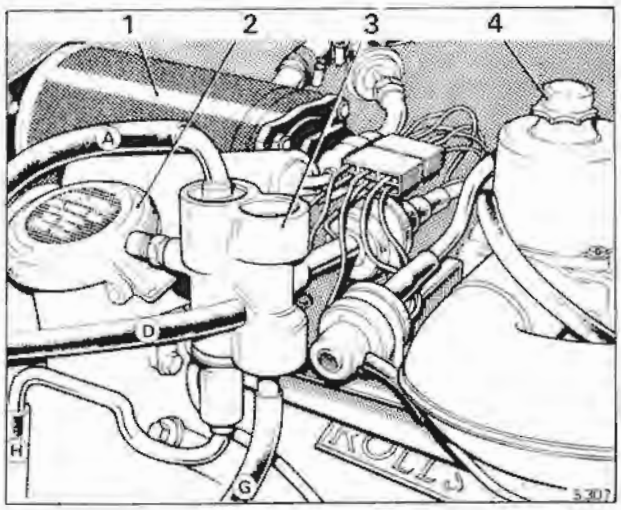

Fig. U23 Position of mixture weakening device
1 Refrigeration compressor
2 Engine oil filler
3 Mixture weakening device
4 'B' bank carburetter

The venturi chamber is connected to a small drilling on the edge of the butterfly plates of both carburetters via the weakening device solenoid valve, with the throttle slightly open the drillings are subjected to manifold depression thus creating a depression in the venturi chamber which draws air from the weakening device air filter. This depression is also apparent in the fuel receiver chamber and subsequently in the carburetter float chambers.

The value of the depression is set by the position of the weakening device adjusting screw.

To obtain adequate float chamber venting to cope with hot soak conditions there is an additional vent from the fuel receiver. This incorporates a low pressure non-return valve to maintain float chamber depression under normal running conditions. In addition to this valve, a one-way valve is fitted into the venturi chamber to prevent any evaporating fuel being discharged to atmosphere.

A float chamber drain, also incorporating a low pressure non-return valve is mounted at the front of the engine adjacent to the oil filter, this valve is connected to the fuel receiver. Should flooding occur the head of fuel in the receiver is sufficient to open the drain valve thus preventing engine stalling if the float chamber needle valves stick.

Weakening device - To remove

1. Label all hoses connected to the weakening device assembly, this will facilitate assembly.
2. Disconnect all hoses to the weakening device.
3. Unscrew and remove the two small setscrews that retain the weakening device to the solenoid platform; the two screws are situated just below the pipe/hose connections for the anti 'run-on' solenoid and weakening device cut-off solenoid.
4. Withdraw the weakening device.

Weakening device - To fit

Fit the weakening device by reversing the procedure given for removal, noting the following point.
1. Ensure that all hoses connecting to the assembly are in a good condition and that all connections are 'air tight'.

Weakening device - To dismantle (see Fig. U24)

1. Remove the weakening device from the vehicle.
2. Remove the small screw that secures the **fuel receiver assembly** into the base of the weakening device, withdraw the assembly.
3. Unscrew the **weakening device signal cap**, collect the cap fibre washer. Unscrew the **signal line adapter** from the casting and withdraw the aluminium washer from the adapter.
4. Remove the circlip from the top of the fuel receiver chamber, withdraw the **float chamber vent pipe** (slight resistance may be felt due to the rubber sealing ring). With a soft drift (e.g. wooden pencil), push the float chamber vent valve out of the weakening device assembly

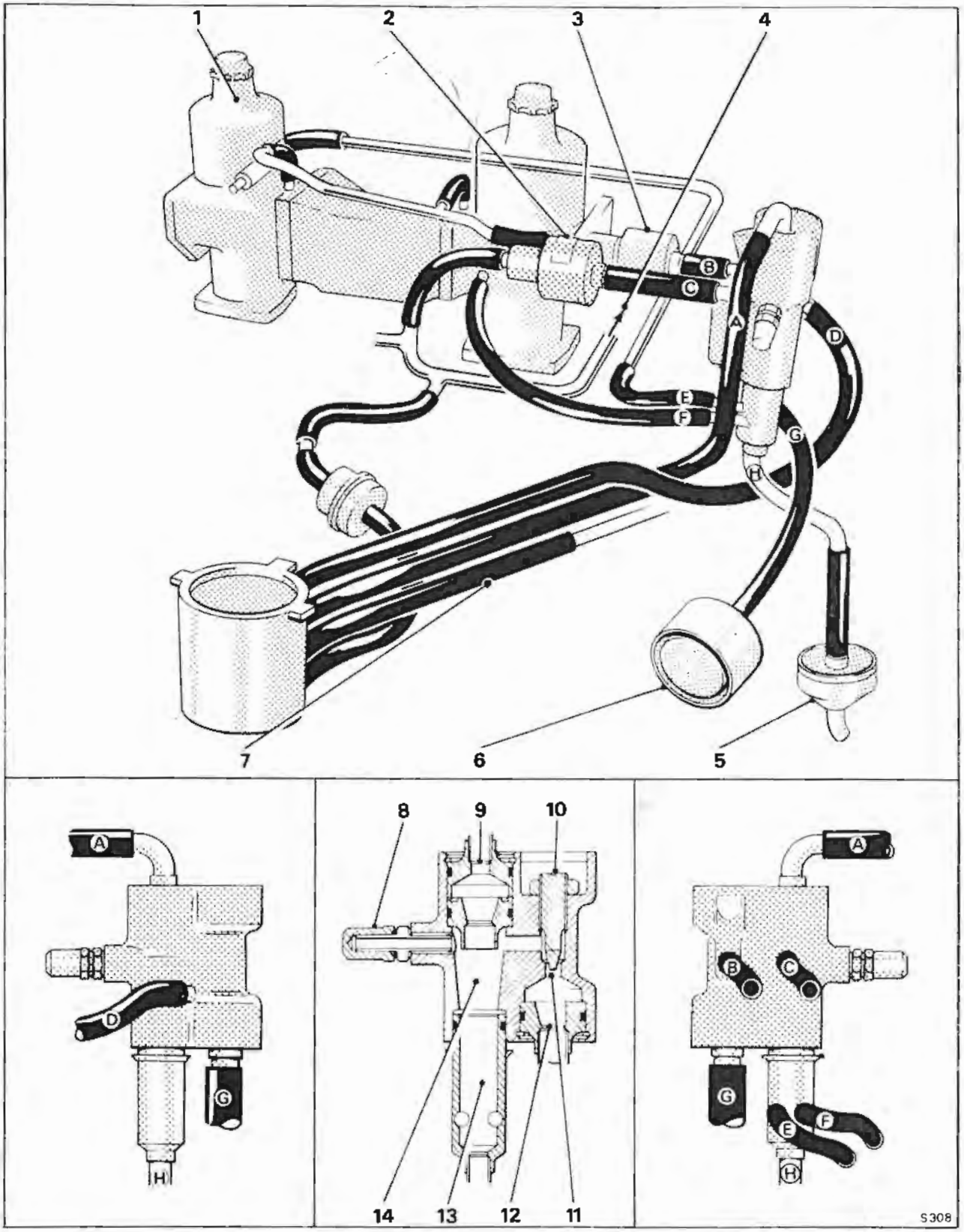

Fig. U24 Mixture weakening device

1	'A' bank carburetter	5	Float chamber drain valve	10	Adjusting screw
2	Anti 'run-on' solenoid	6	Weakening system air filter	11	Venturi chamber
3	Weakening device cut-off solenoid	7	Vent from fuel tank	12	Air intake valve
4	Induction manifold connection	8	Weakening device signal cap	13	Fuel receiver
		9	Float chamber vent valve	14	Fuel receiver chamber

Printed in England
© Rolls-Royce Motors Limited 1977
June 1977
T.S.D. 4200
(USA & Canada)

(the drift is required because the rubber sealing ring fitted around the vent valve will cause a small resistance).
5. Remove the circlip from the base of the venturi chamber, withdraw the **air intake pipe** containing a one-way valve (slight resistance may be felt due to the rubber sealing ring).
6. Remove the **anti-tamper cover** from the top of the venturi chamber, unscrew the lock-nut and using a screwdriver unscrew the **adjusting screw**.

Weakening device - To assemble
To assemble the weakening device, reverse the procedure given for removal, noting the following.
1. Ensure that all components are clean before assembly.
2. Ensure that the rubber sealing rings are in a good condition and lightly smeared with the minimum amount of grease. Ensure that no grease is applied to the valves otherwise a malfunction may occur due to the grease making the valves stick.
3. After assembly, the operator should check that he can blow but not suck on the metal pipes, one on top of the fuel receiver chamber and the other at the bottom of the venturi chamber.

Weakening device signal strength - To check
The **float chamber depression** should be checked as follows.
1. Start and run the engine until normal setting conditions are attained (i.e. engine cooling system thermostat opened, air conditioning unit switched off, and the automatic choke is off).
2. Stop the engine.
3. Connect an electric impulse tachometer to the engine in accordance with the manufacturer's instructions.
4. Disconnect the E.G.R. cut-off solenoid to carburetter signal pipe hose at the solenoid and blank off the hose.
5. Unscrew and remove the weakening device signal cap and connect a 0 to 15,5 cm. (0 to 6 in.) water manometer to the weakening device adapter.
6. Start and run the engine at 2 000 r.p.m. in 'Park' until a steady manometer reading is obtained, this should be 5,08 cm. (2.0 in.) of water depression

A low or zero reading may be caused by
a. A blockage in the weakening device venturi to the weakening device cut-off solenoid.
b. A blockage or restriction in the signal pipe(s).
c. An air leak in the hoses or pipes from the float chambers to the emission control canister.
d. Faulty float chamber vent valve or drain valve
e. Low engine temperature [below 14° C.(57° F.)] a faulty weakening device solenoid or weakening device switch.

A high reading may be caused by
a. An obstruction in the weakening device bleed orifice (weakening device signal strength adjusting screw).
b. Obstructed weakening device air filter or evaporation loss control canister.
c. Incorrect connection or blockage in the weakening device to either the valance connection or the evaporation loss control canister.
d. Weakening device air intake valve sticking closed.
e. Obstructed weakening device air filter hose.
f. Incorrect operation of anti 'run-on' solenoid.
7. If the float chamber depression is still incorrect after checking through the possible causes in Operation 6, set the weakening device signal strength (float chamber depression) by unlocking and turning the adjusting screw (see Fig. U24) until the correct manometer reading is obtained. Turning the adjusting screw clockwise increases the depression.
8. Remove the blank from the E.G.R. cut-off solenoid to signal pipe hose and connect the hose to the solenoid.
9. Raise the engine speed slowly noting both the manometer and tachometer readings. The maximum steady manometer reading should be obtained between 1 200 r.p.m. and 1 500 r.p.m.
10 Allow the engine speed to return to the idle setting (650 r.p.m.) and check the float chamber depression reading on the manometer.
If the float chamber depression at idle speed is above 10,16 mm.H_2O (0.4 in. H_2O) check the ignition timing at idle as this condition may result in unsatisfactory driveability.
11. Fit the tamperproof cover into the top of the venturi chamber.

Weakening device air filter To remove
The air filter container is mounted on the left hand valance just forward of the road spring pot (see Fig. U15).
This is a sealed unit and no attempt should be made to clean the element.
1. To remove the air filter assembly, detach the hose and unscrew the worm drive clip situated around the assembly.
2. Withdraw the assembly.

Weakening device air filter To fit
Fit the air filter container by reversing the procedure given for removal.

Section U4

Crankcase emission control system

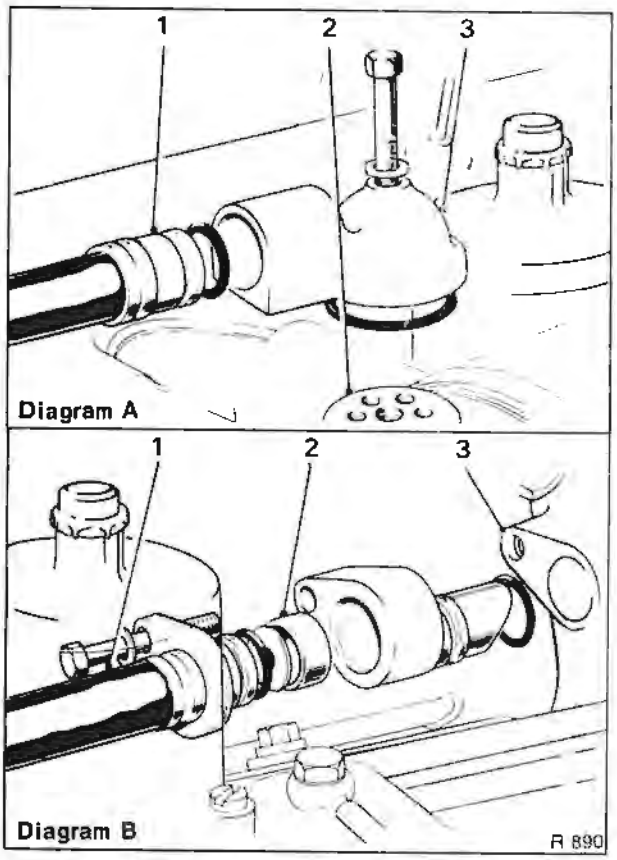

Fig. U25 Crankcase breather pipe connections

Diagram A		Diagram B	
1	Breather tube	1	Breather tube
2	Choke housing	2	Flame trap
3	Breather connection	3	Oil filler housing

Crankcase emissions are controlled by a recirculatory closed breather system.

An insulated draught tube connects the crankcase via the oil filler which is fitted with a sealed cap, to the choke housing upstream of both the choke butterfly and the carburetters. A flame trap capsule containing three wire mesh discs is fitted in a housing at the crankcase end of the draught tube. Engine emission (blow-by) is drawn into the induction system via the draught tube, due to the depression in the choke housing.

1. The flame trap fitted to the breather pipe should be cleaned in the following manner, at the specified mileage.
2. Unscrew the setscrew securing the breather pipe connection to the oil filler pedestal; withdraw the connection from the pedestal (slight resistance may be felt due to the rubber 'O' ring connections).
3. Withdraw the connection from the pipe flange and collect the restrictor.
4. Wash the flame trap assembly in clean petrol, then dry with a high pressure air line. The flame trap assembly consists of 3 gauzes crimped together as shown in Figure U25.
5. To clean the adapter fitted to the choke housing, remove the single setscrew from the breather pipe end connection and detach the pipe.
6. Clean the adapter fitted to the choke housing and ensure that the holes in the adapter are clear.
7. Assembly of the flame trap and breather pipe is in the reverse order, ensuring that the 'O' rings are in good condition.

Printed in England

© Rolls-Royce Motors Limited 1980

March 1980

T.S.D. 4200
(USA & Canada 1976 Model year)

Printed in England

© Rolls-Royce Motors Limited 1977

June 1977

T.S.D. 4200
(USA & Canada)

Section U5

Carburetters and Automatic choke system

The Carburetter and Automatic Choke System can be seen illustrated in Figure U26 and comprises the following main components.

Automatic choke
'Fast-idle'
Stove pipe
(For the remainder of the Automatic Choke System refer to Chapter K).

Carburetters (see Fig. U28)
Bi-metal jet lever
Carburetter fuel filter
Carburetter idle airflow balance
Float
Float chamber
Float needle
Jet assembly
Jet needle
Overrun valve
Piston
Piston damper
Piston damper retainer (Piston ball race clip)
Suction chamber
Tamperproof caps
Throttle disc
Throttle linkage
Viscosity compensator

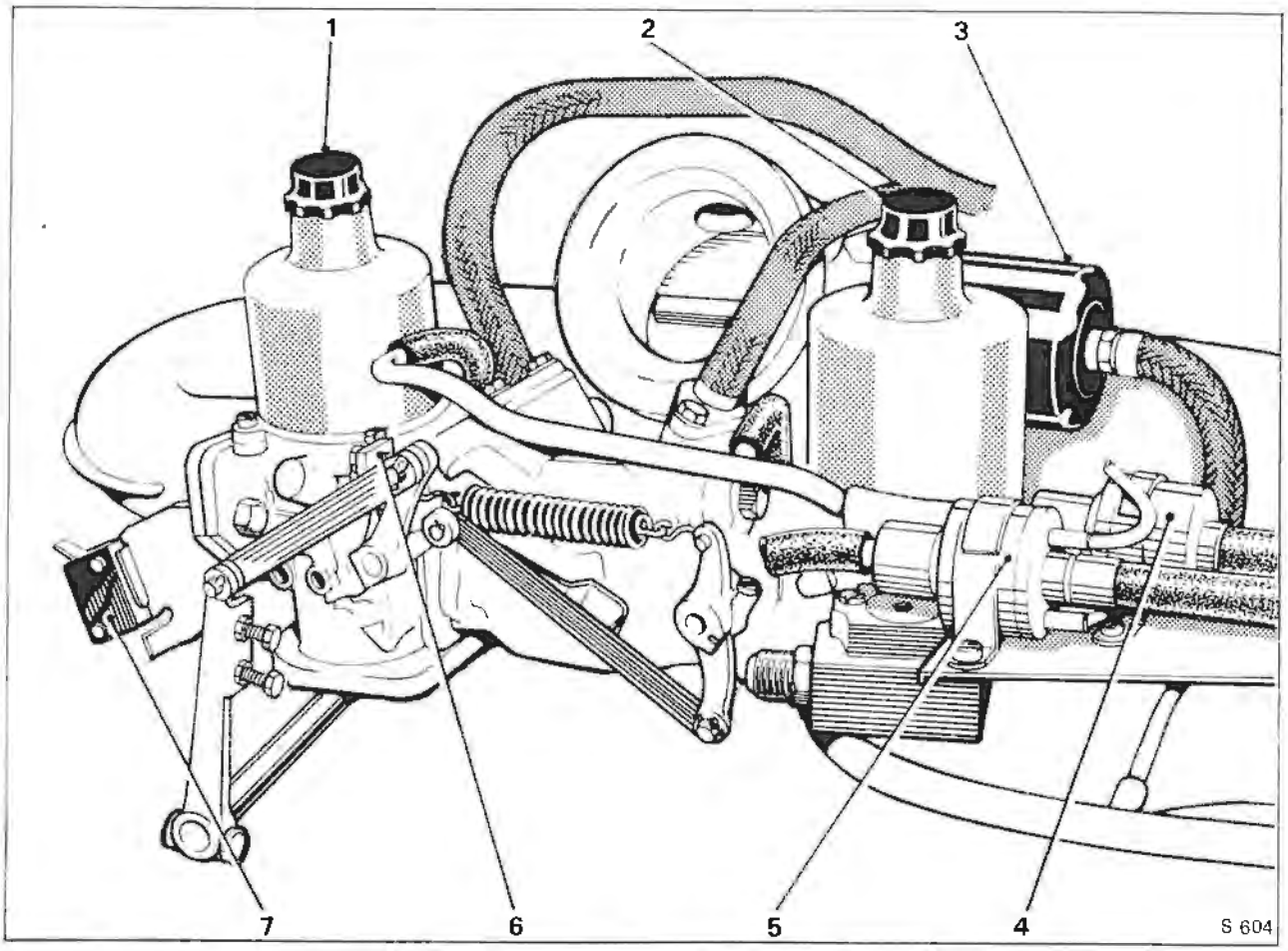

Fig. U26 Carburetters and linkage

1 'A' bank carburetter
2 'B' bank carburetter
3 Choke bi-metal housing
4 Weakening system cut-off solenoid
5 Anti 'run-on' solenoid
6 Idle speed adjusting screw
7 E.G.R. full throttle cut-out micro-switch

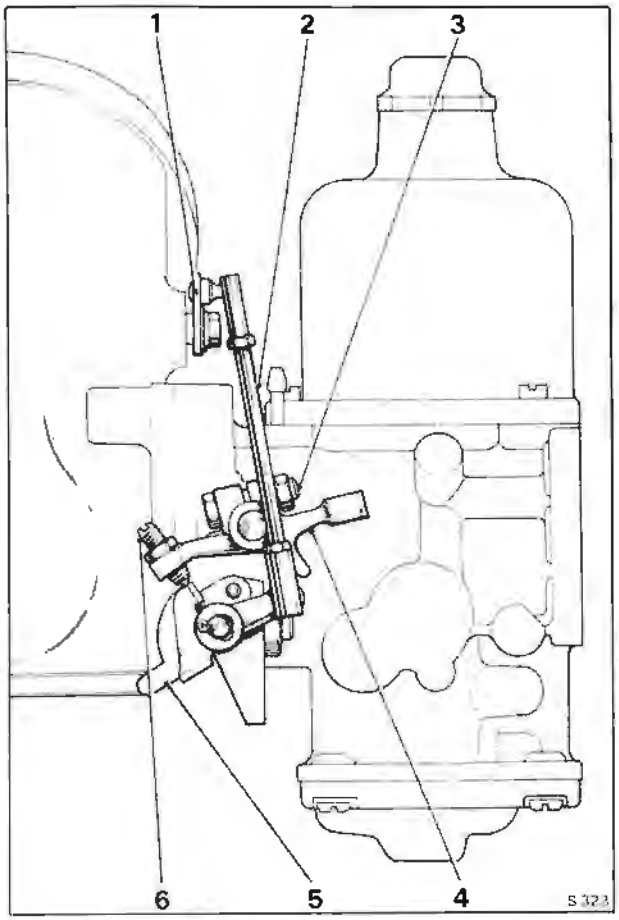

Fig. U27 Fast-idle mechanism
1 Control rod lever
2 Butterfly rod
3 Lever clamp bolt
4 'Fast-idle' lever
5 Cam
6 Adjusting screw

Temperature controlled air intake

Air cleaner silencer
Air blend valve
Cold air intake
Hot air scoop
Manifold vacuum hose
Resonator
Temperature sensor

Weakening device

(Refer to Section U3).

Automatic choke

All details for the Automatic Choke System are given in Chapter K, except for the checking and setting procedures of the following.

'Fast-idle' - To set

1. Ensure that the usual safety precautions are carried out (i.e. parking brake firmly applied, gear range selector lever in 'Park' etc.) and connect an impulse tachometer in accordance with the manufacturer's instructions.
2. Disconnect the signal hose to the E.G.R. cut-off solenoid (not the hose from the solenoid to the E.G.R. valve), at the solenoid and blank the hose.
3. Remove the pressure tapping cap from the weakening device (see Fig. U24).
4. Open the throttles and close the choke butterfly against the bi-metal tension using control rod lever (item 1 - Fig. U27) until the adjusting screw (item 6 - Fig. U27) is resting on the tip of the fast-idle cam. At this point an extra load will be felt due to the action of the extended fast-idle plunger ceasing.
5. Start the engine, if the speed is outside a range of 850 r.p.m. to 900 r.p.m. stop the engine, open the throttles to gain access to the adjusting screw and turn the screw approximately ¼ turn for each 20 r.p.m. required. Tighten the lock-nut.
6. Start the engine and again check the fast-idle speed.
7. When the engine speed has been adjusted to within the prescribed limits open the throttles to release the fast-idle mechanism.
8. Stop the engine, disconnect the tachometer, remove the blank from the E.G.R. signal hose to the cut-off solenoid and fit the hose to the solenoid. Fit the pressure tapping cap to the weakening device.

Choke stove pipe - To flow check

1. Ensure that the usual safety precautions are carried out (i.e. parking brake firmly applied, gear range selector lever in 'Park' etc.) and connect an impulse tachometer in accordance with the manufacturer's instructions.
2. Start and run the engine until normal operating temperature is attained. Stop the engine.
3. Disconnect the stove pipe union at the intake elbow (see Fig. U42) and connect a flowmeter to the pipe via a connector (RH 8945). The flowmeter must be a rotameter type capable of measuring 2,9 cu.m hr. (100 cu.ft hr.).
4. Start and run the engine at idle speed (650 r.p.m.); observe the flowmeter, a correct reading is between 1,41 cu.m/hr. and 1,55 cu.m hr. (50 cu.ft hr. and 55 cu.ft hr.)
5. If the flow is less than 1,41 cu.m/hr. (50 cu.ft/hr.) check the choke stove pipe unions for leaks.
6. If the flow is in excess of 1,55 cu.m/hr. (55 cu.ft/hr.), fit a new restrictor in the choke bi-metal housing (see Chapter K).

Carburetters

Two S.U. HIF7 (Horizontal Integral Float Chamber) carburetters with 4,76 cm. (1.875 in.) choke bores (see Fig. U28) are fitted to the engine on a central 'tee' piece which is mounted over an eight branch induction manifold.

This type of carburetter automatically adjusts both its choke and jet area to meet the demand of the engine which is dependent on engine speed and

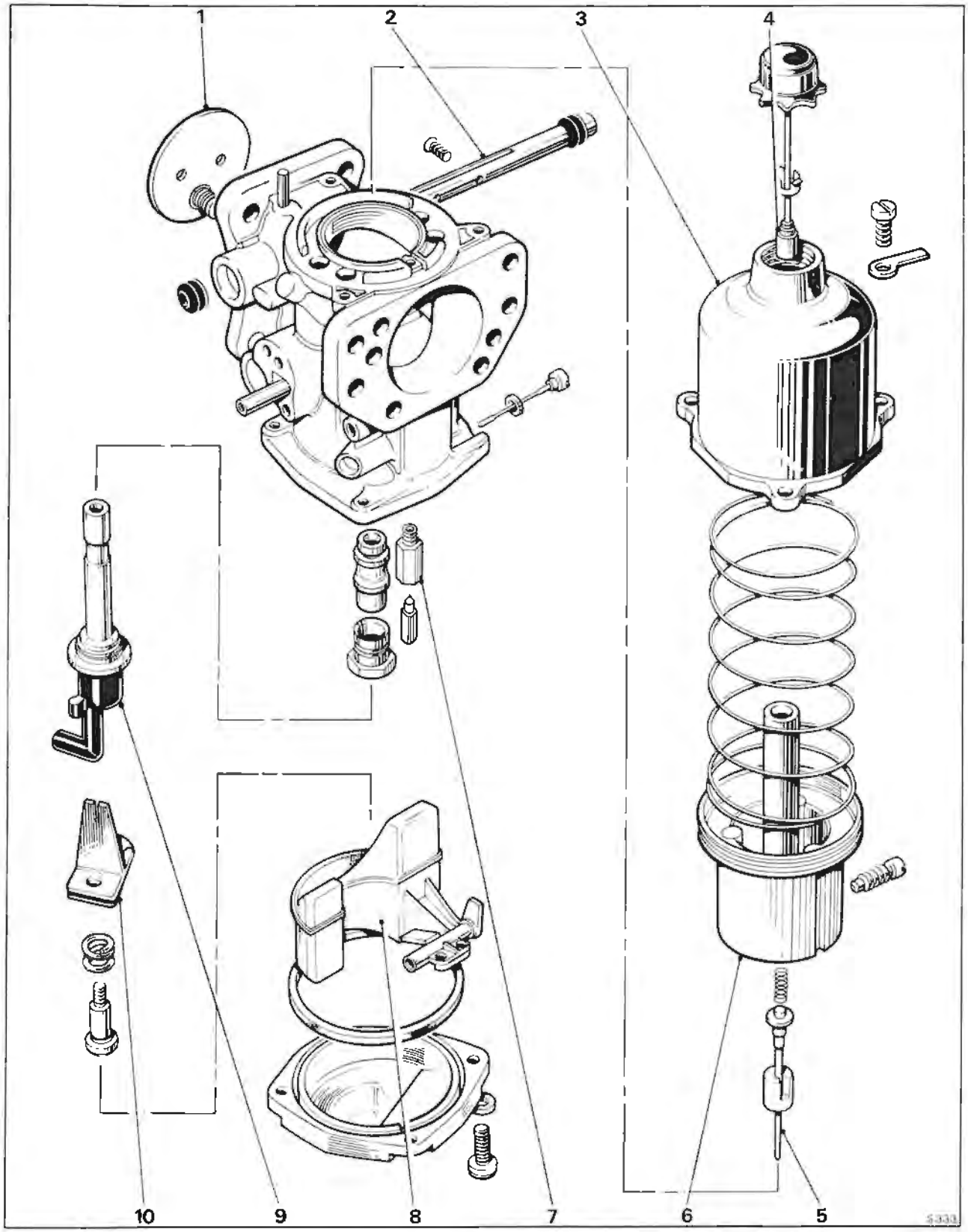

Fig. U28 SU HIF7 carburetter

1 Throttle disc with overrun valve
2 Throttle spindle
3 Suction chamber
4 Piston damper
5 Jet needle
6 Piston
7 Float needle valve assembly
8 Float
9 Jet assembly
10 Bi-metal jet lever

Printed in England
© Rolls-Royce Motors Limited 1977
June 1977
T.S.D. 4200
(USA & Canada)

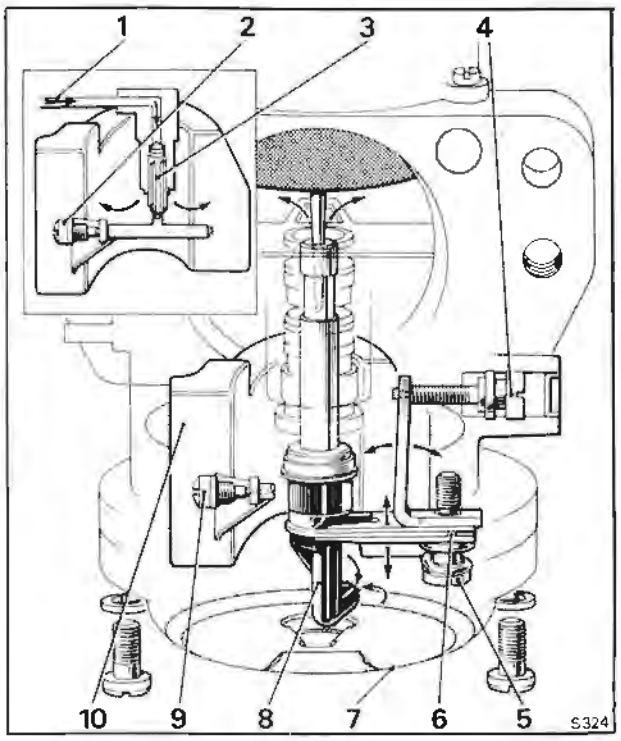

Fig. U29 Float chamber layout

1	Fuel inlet
2	Float fulcrum screw
3	Needle valve
4	Jet adjusting screw
5	Bi-metal pivot screw
6	Bi-metal assembly
7	Bottom cover-plate
8	Jet head
9	Float fulcrum screw
10	Concentric float

loading. As air is drawn through the carburetter, the piston acting as an obstruction will cause a depression to be formed in the area between the throttle and the piston. This depression is communicated by means of transfer holes in the base of the piston to the area above the piston, causing an upward force to be imposed on the piston. The piston will rise in response to this force relieving the depression in the area between the piston and the throttle as it does so until a point is reached where the force acting on the piston is balanced by the weight of the piston and the load exerted by the piston spring.

A spring-loaded jet needle is fitted to the carburetters, which is biased downstream and operates in a 2,54 mm. (0.10 in.) diameter main jet, this jet does not require centralising.

Float chamber (see Fig. U29)
The float chamber is incorporated in the main body casting; access to the chamber is obtained by removing the bottom cover-plate (item 7). The moulded float (item 10) is shaped so that it surrounds the jet tube and is pivoted along a line parallel to the inlet flange. The float is retained by a spindle (items 2 and 9) which screws into the body casting.

Entry of the fuel into the float chamber is via a brass tube (item 1) in the side of the carburetter body to a needle valve assembly (item 3).

The jet is pressed into the top of an aluminium tube which is in turn pressed into a plastic moulding (item 8). This hollow moulding known as the jet head is open at its lower end allowing fuel to enter the jet tube.

Mixture adjustment (see Fig. U29)
The jet tube of the HIF type carburetter is moved in the vertical plane to provide mixture adjustment.

The jet adjustment assembly is comprised of a right-angled adjusting lever of unequal length arms riveted to a bi-metal blade (item 6).

The blade is cut out to accept the jet head (item 8) and the shape of the jet head is formed so that any movement of the bi-metal blade is transmitted to the jet head, moving it in the vertical plane.

The right-angled adjusting lever and bi-metal blade (item 6) are attached to the body casting by a spring-loaded retaining screw (item 5) positioned in the short arm of the lever. This attachment allows the adjusting lever to be pivoted at the outer edge of its short arm and is loaded by the spring towards the jet adjusting screw (item 4).

The jet adjusting screw is located at the outer end of the long arm of the adjusting lever; screwing the adjusting screw inward will lower the jet, enriching the mixture and unscrewing the adjusting screw will allow the spring to return the lever together with the jet, weakening the mixture.

After the mixture has been set the jet adjustment can be sealed by fitting a plug into the jet adjusting screw recess of the carburetter body.

HIF7 carburetters are set and balanced by accurate flow measuring techniques during manufacture and therefore, adjustment of the mixture screws should not be necessary.

Fuel temperature compensation (Viscosity compensator) (see Fig. U29)
This device alters the jet position in relation to the metering needle to compensate for changes in fuel viscosity which take place with changes in fuel temperature.

When the fuel temperature rises, the viscosity is lowered, and in an uncompensated assembly this would allow more fuel to flow for a given jet/needle relationship.

In the HIF jet assembly the jet head is attached to a bi-metal blade (item 6). This bi-metal is immersed in the fuel in the float chamber and will move in the vertical plane in response to changes in fuel temperature. The jet will be raised to a weaker position on the jet needle when the fuel

temperature rises and will be lowered to a richer position when the temperature falls.

From this it will be seen that once the jet position has been selected by adjusting the mixture screw, alterations of fuel temperature will bring about slight alterations in jet position to compensate for the change in fuel viscosity.

The effect of this device is that drivability is improved over wide ranges of temperature, and that exhaust emissions can be kept within closer limits during cold starting and the warm-up period. Temperature compensation also allows carburetters to have the mixture setting pre-set and sealed before the car is delivered.

Overrun valves (see Fig. U30)

During overrun (i.e. when decelerating with the throttles closed), insufficient mixture is supplied to the engine to maintain satisfactory combustion. The overrun valves alleviate this condition by allowing some mixture to pass through the throttle plates (butterflies) at high inlet manifold depressions.

An overrun valve is fitted into the throttle plate of each carburetter.

An overrun valve consists of a small disc retained in each throttle plate by a spring loaded plunger. Under normal conditions the disc is seated against the throttle plate. When the throttle is suddenly closed, the increased inlet manifold depression lifts the disc from its seating and allows a metered quantity of air/fuel mixture to pass through the throttle plate.

The action of the overrun valves maintains satisfactory combustion on overrun, thus reducing hydrocarbon emissions and controlling catalyst temperatures.

After the sudden closure of the throttles and as soon as the manifold depression falls, the overrun valve disc returns to its seat on the throttle plate.

Spring-loaded jet needle (see Fig. U31)

The jet needle fitted to each carburetter is biased towards a predetermined position in the jet orifice by means of a spring-loaded fixing.

The shoulder of the needle abuts a protrusion formed on the needle guide. Under the pressure of a spring the needle is held permanently in one position relative to the air flow. As the needle is retained in a predetermined position no jet centring is required and a non-centreable jet bearing is fitted. To ensure correct fitting the needle guide carries an etched alignment mark which should be positioned mid-way between the two cut-outs in the piston.

Carburetter fuel filter

A filter element is fitted into the fuel filter housing attached to the side of each carburetter. At the intervals specified in the Service Schedules these two filter elements should be discarded and new ones fitted as described in Chapter K.

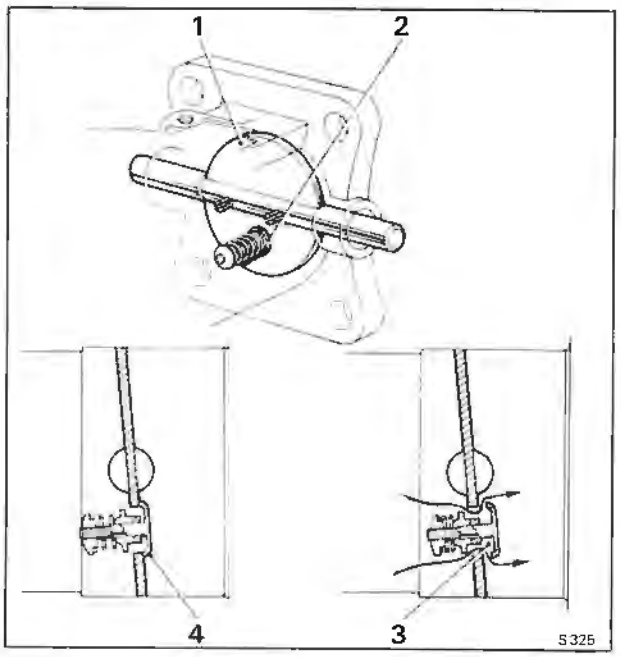

Fig. U30 Overrun valve

1 Throttle butterfly disc
2 Overrun valve
3 Overrun valve open
4 Overrun valve closed

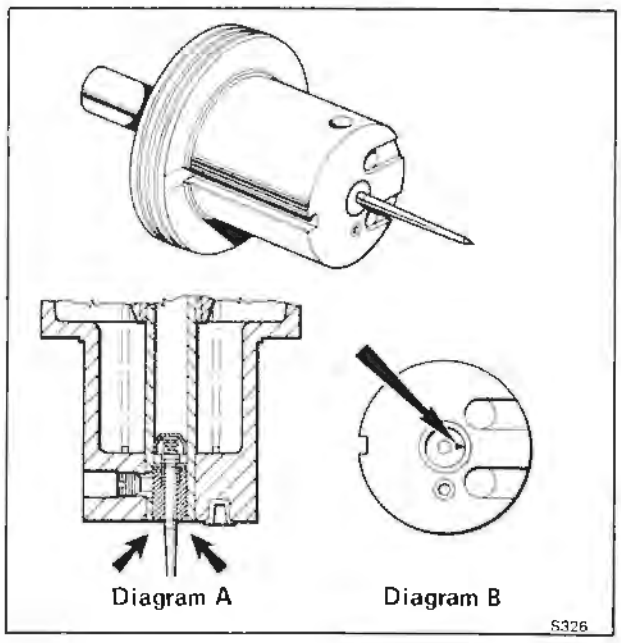

Fig. U31 Spring-loaded jet needle

Diagram A
Needle guide height setting
Diagram B
Needle guide alignment setting

Printed in England
© Rolls-Royce Motors Limited 1977
June 1977
T.S.D. 4200
(USA & Canada)

Carburetter fuel filter
A filter element is fitted into the fuel filter housing attached to the side of each carburetter. At the intervals specified in the Service Schedules these two filter elements should be discarded and new ones fitted as described in Chapter K.

Carburetters and air horns assembly - To remove
Before commencing to remove the carburetters observe the following points.
1. When disconnecting the various hoses, pipes and wiring connections ensure that they are suitably labelled to assist identification when assembling.
2. Ensure that all open ends of pipes, hoses, etc., are suitably blanked off to prevent the ingress of dirt, etc.
3. Ensure that the usual safety precautions are carried out (i.e. parking brake firmly applied, gear range selector lever in Park, battery disconnected, etc.).

To remove the carburetters and air horn assembly proceed as follows.
From 'A' bank side
1. Remove the air intake elbow casting (refer to Air inteke - To remove in Chapter K).
2. Disconnect the fuel feed and recirculation pipes adjacent to 'A' bank carburetter.
3. Withdraw the 'Lucar' electrical connections from the speed control unit. Disconnect the chain link from the throttle linkage to the speed control unit. Withdraw the vacuum hose from the speed control unit. Unscrew and remove the 'steady' bolt from the speed control bracket.
4. Remove the split pin, washer and clevis pin from the throttle linkage just forward of 'A' bank carburetter.

From 'B' bank side
5. Disconnect the E.G.R. feed pipe upper joint (refer to E.G.R. feed pipe - To remove, Section U2).
6. Unscrew the union on the choke stove pipe at the bi-metal housing.
7. Unscrew the fuel feed pipe union at 'B' bank carburetter filter housing.
8. Remove the crankcase emission control system pipe from the choke butterfly housing; withdraw the housing from the end of the pipe.
9. Disconnect the electrical cables to the choke solenoid at the 'snap connector' joints, adjacent to the butterfly housing.
10. Disconnect the 'Lucar' electrical connections to the anti'run-on'solenoid and Weakening and E.G.R. cut-off solenoid.
11. Detach the following hoses from the weakening device.
a. the hose from the float chamber vent valve
b. the hose from the fuel receiver
c. the hose to the air filter
d. the hose from the venturi chamber

These hoses are labelled A, H, G and D in Figure U4.
12. Disconnect the purge line at the restrictor.
13. Unscrew the 7/16 in. A/F nut from the dipstick bracket; collect the washer.
14. Unscrew the ½ in. A/F setscrew from the centre of the carburetter 'tee' piece; withdraw the setscrew and washer.
15. Carefully withdraw the carburetters and air horn assembly, ensuring that no pipes, hoses or electrical items are still connected.

Carburetters and air horns assembly - To fit
Fit the carburetters by reversing the procedure given for their removal, noting the following points.
1. Ensure that all joint faces are clean.
2. Fit new gaskets.

Carburetters - To remove
Remove the carburetters and air horn assembly from the car (refer to Carburetters and air horn assembly - To remove) and then, remove the carburetters from the air horns assembly as follows.

'A' bank carburetter
1. Unscrew the two ½ in. A/F nuts securing the air horn to 'A' bank carburetter.
2. Withdraw the bolts, collect the washers and the full throttle stop mounting bracket.
3. Move the air horn flange upwards away from the carburetter.
4. Unscrew the union from the fuel filter.
5. Detach the vacuum supply hose from on top of the carburetter body adjacent to the carburetter and 'tee' piece flange.
6. Detach the hose from the side of the carburetter that connects to the fuel receiver in the weakening device.
7. Completely remove the two pinch bolts securing the throttle levers to the 'A' and 'B' bank carburetter butterfly spindles, remove the levers.
8. Unscrew the nut and withdraw the pinch bolt securing the 'fast-idle' lever to the carburetter spindle; withdraw the lever.
9. Unscrew the four half-nuts that retain the carburetter to the 'tee' piece flange; collect the washers.
10. Withdraw the carburetter and collect the gasket.

'B' bank carburetter
1. With a screwdriver, unscrew and remove the two screws securing the solenoid platform in position adjacent to 'B' bank carburetter. One screw is located on the air horn and has a nut underneath, and the other screw is situated in the filter housing.
2. Unscrew the ½ in. A/F nuts from the bolts that retain the air horn to the carburetter flange; withdraw the bolts and collect the washers. Move the

5. Completely remove the two pinch bolts securing the throttle levers to the 'A' and 'B' bank carburetter butterfly spindles remove the levers.
6. Detach the vacuum supply hose from on top of the carburetter body adjacent to the carburetter and 'tee' piece flange.
7. Unscrew the remaining union from the fuel filter housing.
8. Unscrew the four half-nuts that retain the carburetter to the 'tee' piece flange; collect the washers.
9. Withdraw the carburetter and collect the gasket.

Dismantling of the components within the carburetters is not recommended as all carburetters are set and balanced by accurate flow measuring techniques during manufacture.

In certain isolated instances however, it maybe necessary to dismantle the carburetters and under these conditions the following procedure should be carefully followed.

Carburetter - To dismantle
Upper half (see Fig. U32)
1. Thoroughly clean the outside of the carburetter.
2. Unscrew the suction chamber retaining screws and remove the identity tag.
3. Lift the chamber assembly vertically from the body without tilting it.
4. Hold the piston firmly and pull the suction chamber, taking care not to bend the damper rod, until the damper retainer is freed from the piston rod. Unscrew and remove the damper.
5. Remove the piston spring, lift out the piston assembly and empty the oil from the piston rod.
6. Note the position of the needle guide etch mark in relation to the piston transfer holes for correct reassembly and unscrew the needle guide locking screw.
7. Withdraw the needle, guide and spring.

Lower half (see Fig. U33)
8. Mark the bottom cover-plate and body to ensure correct reassembly, unscrew the retaining screws and remove the cover complete with the sealing ring.
9. Remove the jet adjusting screw complete with 'O' ring.
10. Remove the jet adjusting lever retaining screw and spring.
11. Withdraw the jet complete with adjusting lever and disengage the lever.
12. Remove the float pivot spindle and aluminium washer.
13. Withdraw the float.
14. Remove the needle valve and unscrew the valve seat.
15. Unscrew the jet bearing locking nut and withdraw the bearing complete with fibre washer.

Throttle disc assembly (see Fig. U34)
16. Remove the throttle disc retaining screws.
17. Close the throttle and mark the position of the throttle disc in relation to the carburetter flange. **Do not mark the disc in the vicinity of the overrun** valve. Open the throttle and carefully withdraw the disc from the throttle spindle taking care not to damage the overrun valve.
18. Withdraw the throttle spindle and remove the seals, noting the way it is fitted in relation to the carburetter body to ensure correct reassembly.

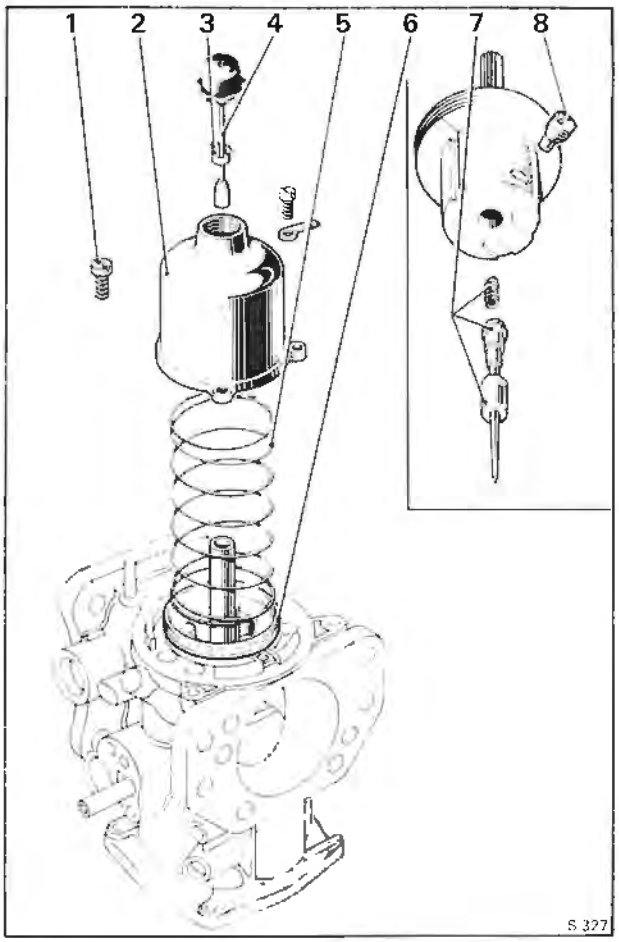

Fig. U32 Dismantling a carburetter (Upper half)
1 Suction chamber retaining screw
2 Suction chamber
3 Damper retainer (Piston ball race clip)
4 Damper rod
5 Spring
6 Piston
7 Spring-loaded needle assembly
8 Needle guide locking screw

Printed in England
© Rolls-Royce Motors Limited 1977

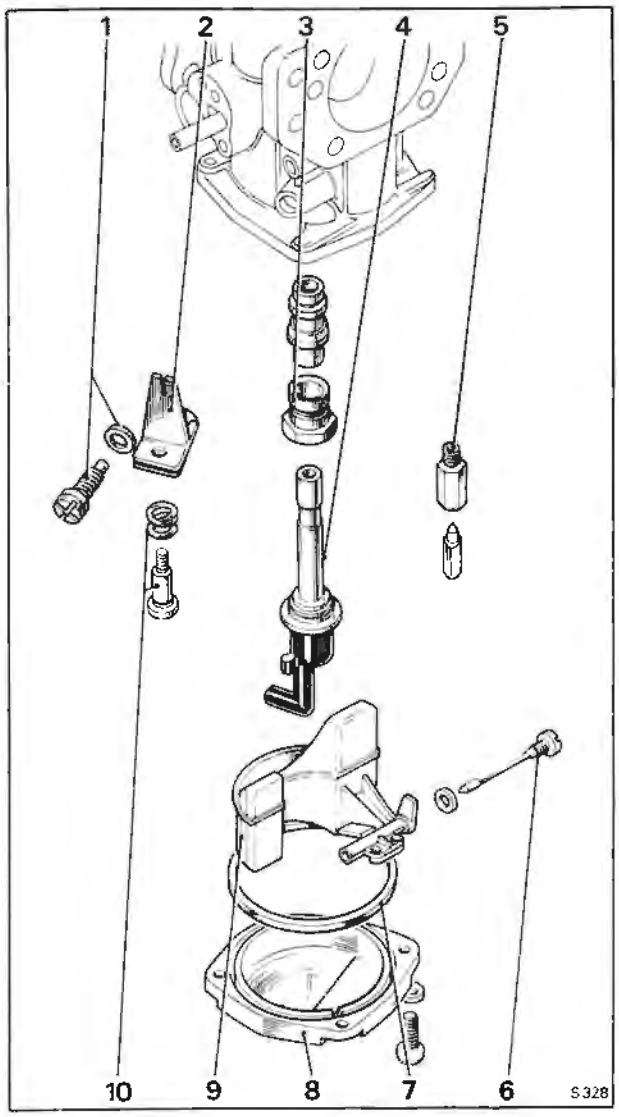

Fig. U29 Dismantling a carburetter (Lower half)
1 Jet adjusting screw and 'O' ring
2 Jet adjusting lever
3 Jet bearing assembly
4 Jet
5 Float chamber needle valve assembly
6 Float pivot spindle
7 Sealing ring
8 Bottom cover plate
9 Float
10 Jet lever adjusting screw

Carburetter - To inspect

1. Examine the throttle spindle and its bearings in the carburetter body; check for excessive play, and fit new parts if necessary.

2. Examine the float needle and seating for damage and excessive wear; fit new parts if necessary.

3. Examine all rubber seals and 'O' rings for damage or deterioration; fit new parts if necessary. **The cover-plate sealing ring must be renewed.**

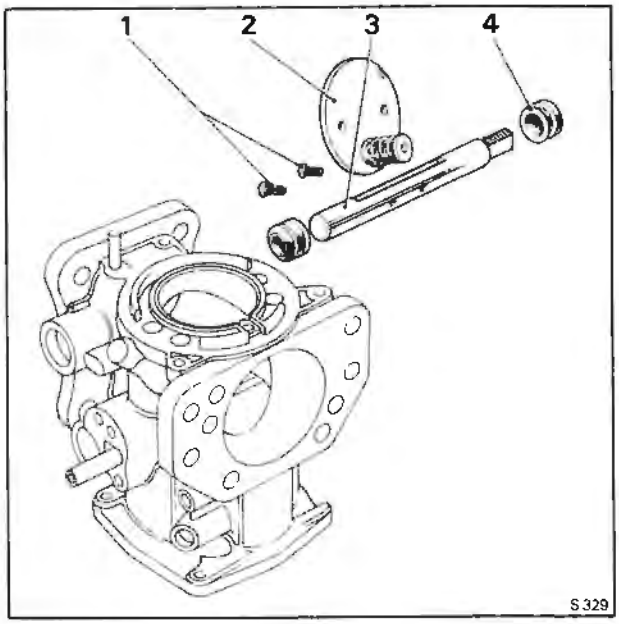

Fig. U30 Dismantling a carburetter (Throttle disc assembly)
1 Throttle disc retaining screws
2 Throttle disc assembly
3 Throttle spindle
4 Seal

4. Examine the carburetter body for cracks and damage and for security of the brass connections and the piston key.

5. Clean the inside of the suction chamber and piston rod guide with fuel or methylated spirit (denatured alcohol) and wipe dry. **Abrasives must not be used.**

6. Examine the suction chamber and piston for damage and signs of scoring.

7. Check that all the balls are in the piston ball race (2 rows, 6 per row). Fit the piston into the suction chamber, without the damper and spring, hold the assembly in a horizontal position and spin the piston. The piston should spin freely in the suction chamber without any tendency to stick.

Carburetter - To assemble

Assemble the carburetter by reversing the procedure given for removal, noting the following points.

1. Ensure that the throttle disc is fitted in its original position.

2. New throttle disc retaining screws must be used when refitting the disc. Ensure that the throttle disc is correctly positioned and closes correctly before tightening the retaining screws. Spread the split ends of the screws sufficiently to prevent turning.

3. Position the throttle spindle end seals just below the spindle housing flange.

4. When fitting the jet assembly to the adjusting

5. Fit a new float pivot spindle sealing washer or anneal the existing washer.

Check the level of the float in the float chamber (refer to Carburetter float level - To set).

6. Check that the small diameter of the jet adjusting screw engages the slot in the adjusting lever and set the jet 3,05 mm. (0.12 in.) below the bridge of the body.

7. Ensure that the needle guide etch mark aligns correctly with the piston transfer holes. After fitting the needle assembly, check that the shoulder of the guide aligns with the face of the piston (see Fig. U31).

8. To prevent the piston spring from being 'wound up' during reassembly, temporarily fit the piston and suction chamber, less the piston spring, to the body and pencil mark their relative positions to each other. Fit the spring to the piston, hold the suction chamber above the piston, align the pencil marks and lower the chamber over the spring and piston.

Before assembly ensure that the damper retainer (piston ball race clip) is refitted by pressing it fully into the piston rod (see Fig. U35).

The damper retainer (piston ball race clip) can also be installed with the suction chamber fitted to the engine by using fitting tool RH 9086.

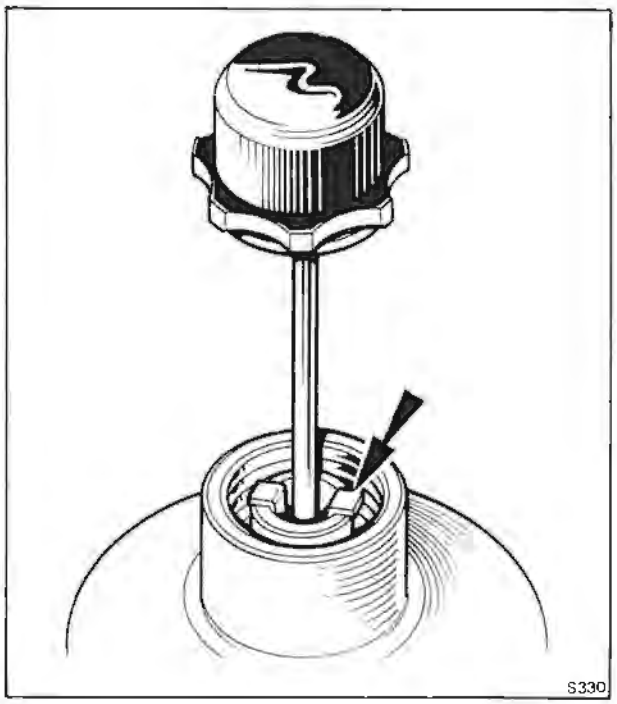

Fig. U35 Position of damper retainer

Carburetter float level - To set

1. Remove the carburetter from the engine.
2. Invert the carburetter.
3. Mark the bottom cover-plate and carburetter to ensure correct assembly, unscrew the retaining screws and remove the cover complete with the sealing ring.

A new rubber sealing ring must be installed when fitting the cover-plate.

4. Ensure that the float chamber needle valve is held in the closed position by the weight of the float only.
5. Check that the lowest point on the float (see Fig. U36) is either level with the float chamber face, or up to 1,52 mm. (0.060 in.) below.
6. If necessary, adjust the float position by carefully bending the brass pad.
7. Check that the float pivots correctly about the spindle.

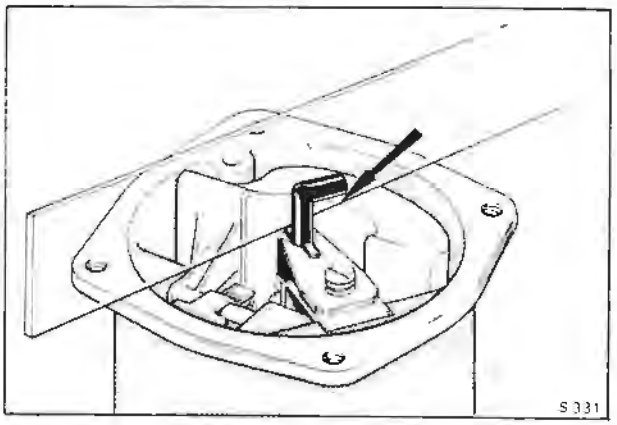

Fig. U36 Checking the float level

Carburetter air valve damper - To top-up

The upper portion of the guide spindle, attached to the air valve piston in each carburetter, is hollow and is filled with the same type of oil as used in the engine.

1. Unscrew the damper cap and carefully raise the damper until the damper, **together with the air valve piston**, reach the top of their travel. Ensure that the retainer is not displaced from its position in the piston rod (see Fig. U35).
2. Holding the damper and piston in the raised position, fill the recess in the damper retainer (piston ball race clip) with clean engine oil.
3. Lower the damper until the cap contacts the neck of the suction chamber, then carefully raise the damper and piston again and check the oil level; this is correct if the oil level is just visible in the bottom of the recess in the damper retainer (piston ball race clip). If the oil level is not visible, repeat the topping-up procedure until the oil level is correct.
4. Check that the damper retainer (piston ball race clip) is still in its correct position in the piston rod as shown in Figure U35, then lower the damper and screw the damper cap firmly into position.

Printed in England
© Rolls-Royce Motors Limited 1977
June 1977
T.S.D. 4200
(USA & Canada)

If the damper retainer (piston ball race clip) becomes inadvertently displaced during the topping-up procedure or if the damper should be removed from the piston, do not fit the damper cap or run the engine until the retainer has been returned to its correct position in the piston rod. The special tool RH 9086 should be used to fit damper retainer (piston ball race clip).

Carburetter throttle linkage - To fit and set (see Fig. U37)

1. Assemble 'A' bank and 'B' bank throttle levers (items 7 and 11) onto the carburetter spindles.
2. Fit the setting jig (RH 8880) into position on the throttle levers.
3. Fully close 'B' bank carburetter butterfly (item 8).
4. Tighten the pinch bolt securing 'B' bank throttle lever.
5. Fully close 'A' bank carburetter butterfly (item 2).
6. Tighten the pinch bolt securing 'A' bank throttle lever.
7. Fit the throttle spring (item 5) to the throttle levers.
8. Remove the setting jig from the throttle levers.
9. Fit the cross link guide bracket (item 10) to the carburetter 'tee' piece (item 6). Secure in position with two small screws which should be 'locked' using two tab washers.
10. Fit the cross link (item 9) and the eccentric throttle adjuster (item 4) onto the throttle levers, ensuring that both throttle butterflies are closed when adjusting and tightening the eccentric adjuster.

Note

The eccentric pin should be set in the lowest position possible.

11. Ensure that the cross link guide (item 10) has a clearance of between 1,27 mm. (0.050 in.) and 1,78 mm. (0.070 in.) with the cross link. If necessary bend the guide to give these clearances.
12. Check that the throttle linkage moves freely.
13. Fit the idle stop screw (item 3) and lock nut; adjust until the screw just contacts the stop bracket with the throttle butterflies remaining in the closed throttle position.
14. Screw down the idle stop screw ½ turn.
15. Connect one end of the drive link (item 1) to the 'B' bank throttle lever and the other end, to the manifold shaft lever (item 13).
16. Operate the linkage to ensure free movement.
17. With the throttles in the closed position check that the relationship between the 'A' bank control shaft to control rod lever (item 12) on the rear of the manifold shaft and the front manifold shaft lever (item 13) is as illustrated in Figure U37. Tighten the securing bolts on both levers.
18. Operate the mechanism; check for freedom of movement within the linkage and also clearance with the various engine components.
19. To set the remainder of the linkage from the control rod lever on the rear of the manifold shaft to the accelerator pedal refer to Chapter T - Transmission.

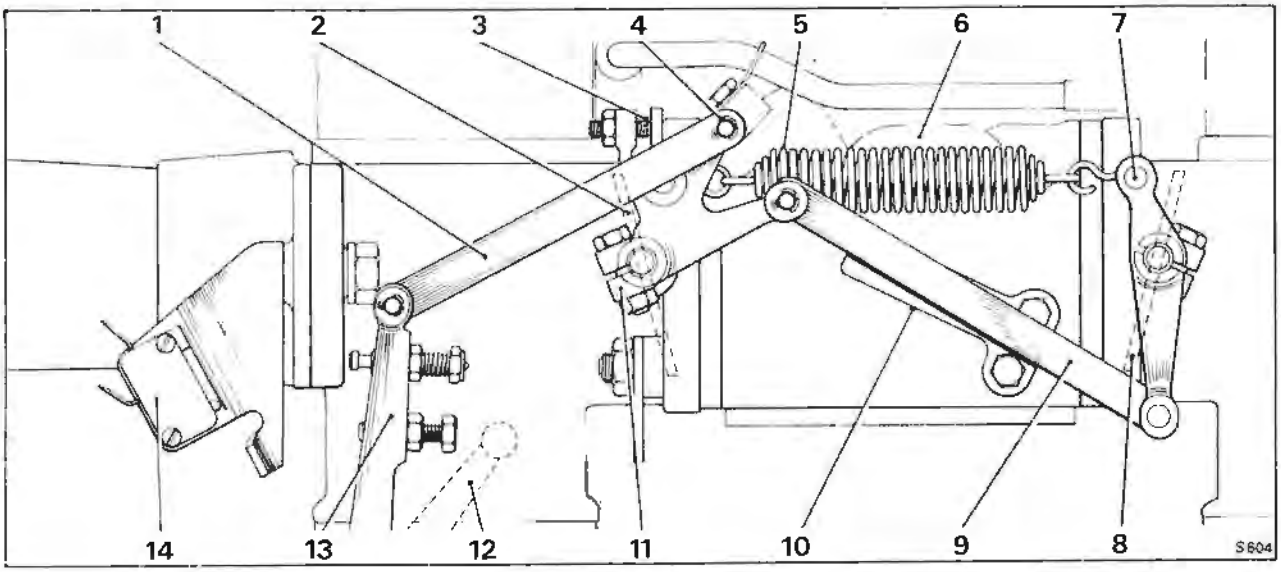

Fig. U37 Carburetter throttle linkage

1 Drive link
2 'A' bank carburetter throttle butterfly
3 Idle stop screw
4 Eccentric throttle adjuster
5 Throttle spring
6 Carburetter 'tee' piece
7 'B' bank carburetter throttle lever
8 'B' bank carburetter throttle butterfly
9 Cross link
10 Throttle cross link guide bracket
11 'A' bank carburetter throttle lever
12 Rear manifold shaft lever
13 Front manifold shaft lever
14 E.G.R. full throttle cut-out micro-switch

Printed in England

© Rolls-Royce Motors Limited 1977

Carburetters - To set

The carburetters fitted to these cars are adjusted at the factory using **special equipment** to ensure that their settings comply with the current emission control regulations.

Under normal circumstances the carburetters should not require adjustment in service.

If however, adjustment is found necessary due to inadvertent disturbance or replacement of a component set the carburetters by carrying out the following operations in the sequence given.

a. Set throttle linkage and temporarily set engine idle speed. Check linkage clearances.
b. Set cold start fast-idle cam.
c. Tune carburetters.
d. Set cold start fast-idle speed.
e. Set the kick-down micro-switch.
f. Set full throttle stop and full throttle E.G.R. cut-off micro-switch.

Carburetter tuning

Preliminary checks

Before tuning the carburetters the following checks should be carried out.

Ensure that the vehicle is in 'Park', the parking brake firmly applied and that the gear range actuator thermal cut-off has been removed from the main fusebox.

1. Check the condition of the spark plugs.
2. Check the ignition timing.
3. Check the flow through the choke stove pipe.
4. Check the entire induction system for air leaks.
5. Check the purge line flow rate.
6. Ensure that the air conditioning system is switched off.
7. Start the engine and warm up; allow to run for at least 5 minutes after the thermostat has opened.
8. Stop the engine, ensure that the choke butterfly valve is fully open and the choke fast-idle off.
9. Connect an electric impulse tachometer in accordance with manufacturer's instructions.
10. Check the float chamber depression.
11. Check the exhaust gas recirculation system for correct operation.
12. Check and set the full throttle exhaust gas recirculation cut-out micro-switch.

Carburetter idle air balance

1. Ensure that the usual safety precautions are carried out (i.e. parking brake firmly applied, gear range selector lever in Park, etc.) and connect an impulse tachometer in accordance with the manufacturer's instructions.
2. Disconnect the speed control chain.
3. Start and run the engine until normal operating temperature is attained.
4. Stop the engine.
5. Fit the dial gauges RH 9105 with RH 8841 (kit to convert dial gauges to fit the HIF7 carburetters) to the carburetter dashpots in place of the dampers.
6. Zero the gauges with the engine stopped and lightly tighten the gauge clamp screws.
7. Start and run the engine at the idle speed setting (650 r.p.m.); adjust the carburetter piston lifts to be equal (within 10%) using the eccentric adjuster (see Fig. U37).
8. The average piston lift reading should now be between 2,03 mm. and 2,54 mm. (0.080 in. and 0.100 in.).

If the idle speed piston lift is over 2,54 mm. (0.100 in.) check the ignition timing at idle as this condition may result in unsatisfactory driveability.

9. Stop the engine and remove the impulse tachometer.
10. Remove the dial gauges and fit the carburetter dampers. **Ensure that the dashpot ball race clips (piston damper retainers) are fitted correctly and are pressed fully into the piston rod (see Fig. U35) using tool RH 9086.**
11. Connect the speed control chain and adjust to give a minimum slack condition, consistant with no impediment to the throttle lever to return to the idle speed position.

Carburetter mixture strength - To set

1. Ensure that the usual safety precautions are carried out (i.e. parking brake firmly applied, gear range selector lever in Park, etc.) and connect an impulse tachometer in accordance with the manufacturer's instructions.
2. Remove the air intake, blank off the hot idle compensator feed drilling (see Fig. U38) and replace the intake.

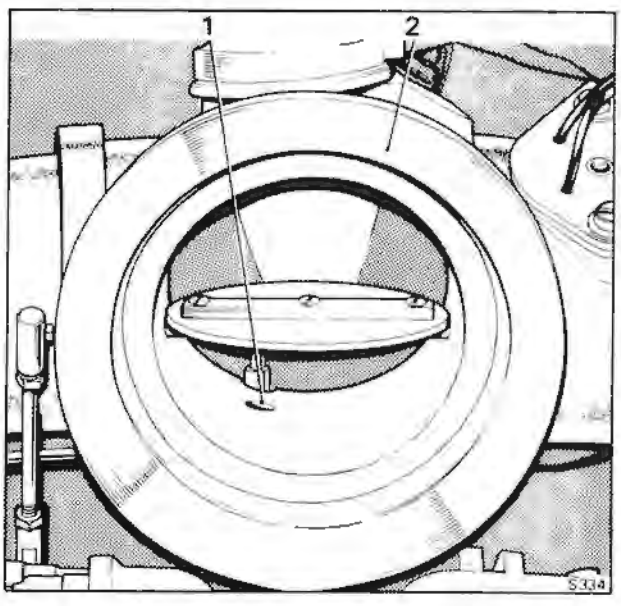

Fig. U38 Hot idle mixture compensator feed
1 Hot idle compensator feed
2 Air intake butterfly housing

June 1977

T.S.D. 4200
(USA & Canada)

3. Remove the air inlet hose from the air injection system pressure relief valve and fit a blank over the valve (a suitable blank may be produced from a short length of rubber hose with one end plugged).
Note
The air injection system is inoperative when the relief valve inlet air hose is disconnected from the air pump. The valve must be blanked to prevent air being drawn into the exhaust port by pulsations in the exhaust system since this would affect the idle CO reading.

4. Disconnect the E.G.R. cut-off solenoid to carburetter signal hose at the solenoid, blank off the hose.
5. Unscrew and remove the pressure tapping cap from the weakening device.
6. Ensure that the engine has run for at least 25 minutes after the thermostat has opened.
7. Purge the engine at 2 000 r.p.m. in Neutral for ¼ minute. Allow the engine speed to return to the idle setting and ensure that this is 650 r.p.m.; adjust if necessary using the idle stop screw.
8. Insert the probe of a CO meter into either exhaust system tailpipe and check the reading.

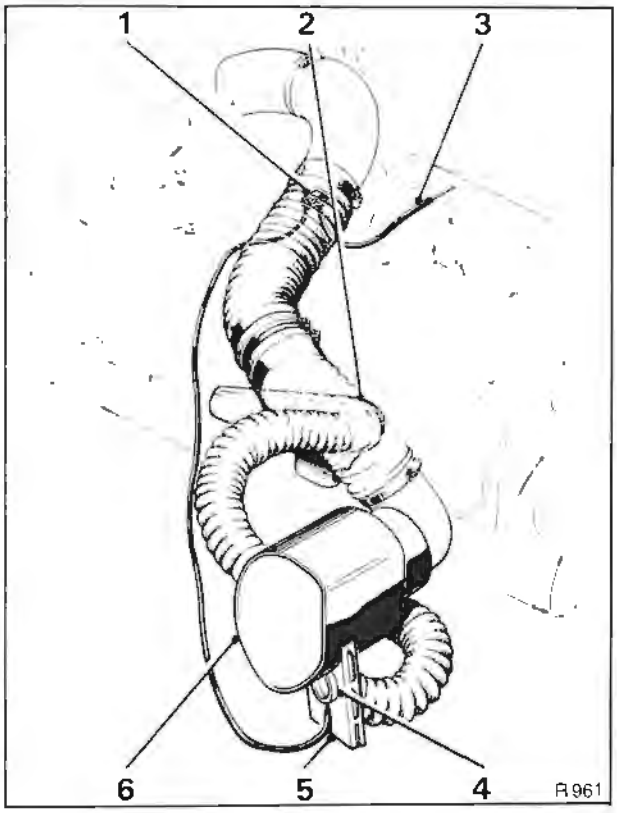

Fig. U39 Temperature controlled air intake
1 Temperature sensor
2 Hot air scoop
3 Manifold vacuum hose
4 Air blend valve
5 Cold air intake
6 Air cleaner silencer

9. The CO meter reading should be 1% to 4%. If the reading is outside the limits quoted
a. Check for induction system leaks (if below 1%)
b. Check the choke stove and purge line flow rates.
10. If after carrying out Operation 8 the idle speed CO meter reading is still outside the limits quoted, the carburetter mixture screws (see Fig. U29) may be adjusted by equal amounts up to ½ turn in the same direction in order to achieve the mean limit of 2.5%. No attempt should be made to adjust the CO reading if it is in the region of 2.5% to 4.0%.
Note
a. Clockwise rotation of the mixture screws will richen the mixture.
b. The tuning operations should be carried out in the shortest possible time. If the time exceeds 3 minutes, run the engine at 2 000 r.p.m. in Neutral for ¼ minute and then resume the tuning operations. Repeat this purging operation if a further period of 3 minutes is exceeded.

After purging the system gently tap all around the neck of the carburetter suction chamber with a lightweight non-metallic object (i.e. the wooden handle of a small screwdriver), to eliminate carburetter piston hysteresis. The engine is to be run on Indolene Clear (HO) reference fuel or equivalent (Unleaded gasoline only).

11. Stop the engine.
12. Fit the pressure tapping cap to the weakening device, fit a new sealing washer if necessary.
13. Remove the blank from the air pressure relief valve and connect the feed hose from the air pump to the relief valve.
14. Remove the blank from the E.G.R. cut-off solenoid to carburetter signal hose and connect the hose to the E.G.R. cut-off solenoid.
15. Start the engine and check the idle speed, this should be 650 r.p.m.; adjust by means of the idle stop screw (refer to Section U6).
16. Stop the engine, remove the air intake and discard the blank from the hot idle compensator feed drilling; fit the air intake.
17. Remove the impulse tachometer.

Carburetter tamperproofing
Both carburetter mixture screws **must** have tamper-proof caps fitted upon completion of the setting operation.

Special tools have been designed and produced for the fitting of the tamperproof caps as follows.
'A' bank carburetter mixture screw cap - RH 9096
'B' bank carburetter mixture screw cap - RH 9097

Temperature controlled air intake

To ensure rapid warm-up and improve control of the air/fuel ratio a temperature controlled air intake is fitted (see Fig. U39).

A vacuum operated blending valve attached to the air cleaner assembly is controlled by a thermal sensor in the air intake elbow. This valve blends hot

air from a pick-up point (scoop) adjacent to the exhaust manifold with cold air from under the front wing; thus maintaining a constant temperature of the intake air as it enters the carburetters.

All other details for the Temperature Controlled Air Intake System are given in Chapter K except for the checking procedure which is as follows.

Temperature controlled air intake - To check

1. Disconnect the air intake hose at the intake elbow and check that the correct temperature sensor is fitted, this should be colour coded white.
2. Disconnect both vacuum hoses at the temperature sensor.
3. Place the open ends of both hoses together and check that there is no obvious air leak. Detach the open ends of the hoses from each other (i.e. release the vacuum sharply), and listen for the vacuum motor within the wing to 'click' open.
4. Reconnect the hoses.

Note

If there is an air leak or the operation of the temperature controlled air intake is suspect, remove the right-hand front underwing sheet and check the hose connection to the vacuum motor; also observe the operation of the temperature flap.

Printed in England
© Rolls-Royce Motors Limited 1977

Section U6

Ignition system

Data

Ignition timing	9°B.T.D.C. (Static) 15°B.T.D.C. at 1 200 r.p.m. 7° - 13° B.T.D.C. at idle speed (650 r.p.m.) (Approach 1 200 r.p.m. from a higher speed).

Ignition control system

The ignition system utilises an Opus distributor (in which an oscillator pick-up and control unit replace the conventional contact breaker), a high load ignition coil and a ballast resistor. The control unit comprises an electronic oscillator, amplifier and power transistor.

A drum with eight ferrite rods (one per cylinder) moulded into the outer edge is mounted onto the distributor drive-shaft. As the drum rotates a voltage is created each time a ferrite rod passes the oscillator pick-up, this signal is then amplified and used to switch-off the normally conducting power transistor in the primary coil circuit thus inducing a high voltage in the secondary winding which is distributed to the sparking plugs in the normal manner.

The distributor has a conventional centrifugal advance mechanism.

In addition, **cars other than those destined for California** are fitted with a system employing a vacuum advance capsule, the carburetter gated vacuum signal is applied to the capsule to advance the ignition timing for part throttle economy during open road cruising. This vacuum signal is inhibited by a solenoid valve until a predetermined coolant temperature is reached.

The Opus distributor provides increased accuracy of timing and increased service life before maintenance is required.

For the removal and fitting instructions of the ignition system components refer to Chapter M.

Ignition - To time (using a stroboscope)

The ignition is timed on A1 cylinder which is located at the front left-hand side of the engine (viewed from the front of the car).

Note

If the ignition timing is to be set, ensure that the sparking plugs are in good condition before running the engine; if they require cleaning or renewal the sparking plugs gap should be set to 0,9 mm. (0.035 in.).

1. To check the ignition timing commence by running the engine until normal operating temperature is attained and the choke 'fast-idle' is in the off position. Switch off the engine.
2. Connect a stroboscope and a tachometer to the engine as described in the instructions supplied with the respective equipment. **On cars other than those destined for California**, disconnect the feed hose at the distributor vacuum advance capsule and blank off the feed hose.
3. Start the engine and adjust the throttle stop screw to give an idle speed of 1 200 r.p.m. When setting the engine idle speed reduce from a higher speed to 1 200 r.p.m.
4. Direct the flashing light of the stroboscope onto the crankshaft damper timing marks and timing pointer; the pointer is positioned on the right-hand side of the crankshaft damper when viewed from the front of the engine.
5. If the timing pointer does not coincide with the 15°B.T.D.C. mark on the crankshaft damper adjust the ignition timing as follows.
6. Release the clamp screw on the distributor and rotate the head of the distributor in the appropriate direction until the correct timing is obtained. Clockwise rotation of the distributor head advances the ignition and conversely anti-clockwise rotation retards the ignition. After adjustment has been carried out tighten the clamp screw and again check to ensure that the timing has not altered whilst tightening the clamp screw.
7. Set the engine idle speed to 650 r.p.m.
8. Direct the flashing light of the stroboscope onto the crankshaft damper timing marks and timing pointer. Check that the ignition timing is approximately 7° - 13° B.T.D.C.

Operations 9 to 11 inclusive apply only to cars employing a vacuum advance capsule (i.e. cars other than those destined for California).

9. Disconnect the hose from the vacuum manifold to the purge line restrictor at the restrictor (see Fig. U4). Connect a suitable length of hose between this hose and the connection on the distributor vacuum capsule.
10. Start the engine and set the idle speed to 650 r.p.m.
11. Direct the flashing light of the stroboscope onto the crankshaft damper timing marks and timing pointer. Check that the ignition timing has advanced to between 15°and 25°B.T.D.C. If the ignition timing has not advanced, the distributor assembly is faulty.

Printed in England

© Rolls-Royce Motors Limited 1979

November 1979

T.S.D. 4200
(USA & Canada 1978 Model year)

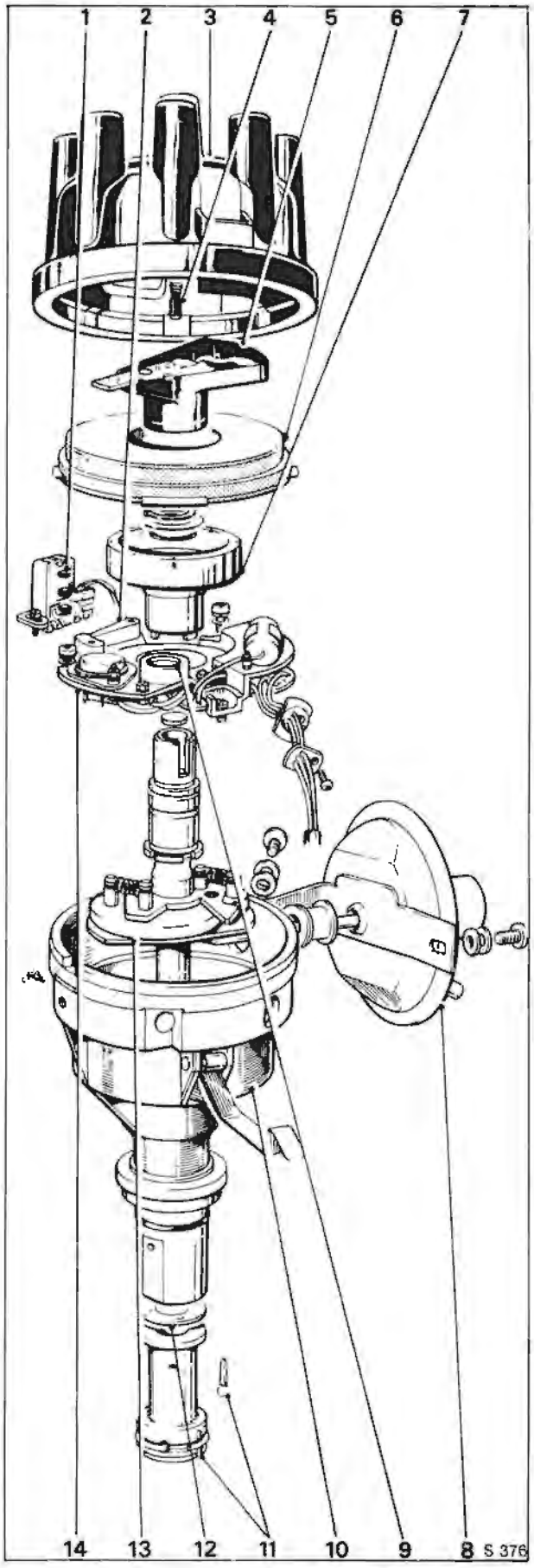

12. Stop the engine.
13. Fit all hoses to their correct connections.
14. Start the engine and set the idle speed to 650 r.p.m.
15. Stop the engine and remove all the test equipment.

Setting the engine idle speed
Ensure that the engine is at normal operating temperature and that the choke 'fast-idle' is in the off position.

The air conditioning system must be switched off and a tachometer connected to the engine in accordance with the manufacturer's instructions.
1. Stop the engine, remove the air intake and blank off the hot idle compensator feed drilling (see Fig. U38); replace the air intake.
2. Start the engine and, if necessary, adjust the engine idle speed to 650 r.p.m. using the throttle stop screw.
3. Stop the engine and remove the air intake. Remove the blank from the hot idle compensator feed drilling and fit the air intake. Detach the tachometer and stroboscopic timing equipment.

Distributor maintenance
The distributor requires no routine maintenance except that, at the mileage intervals specified in the Service Schedules, the moulded cover and H.T. rotor arm should be removed and the spindle shaft bearings lubricated by inserting a few drops of engine oil onto the felt pad. The automatic advance mechanism should also be lubricated at this time with a few drops of engine oil inserted through apertures in the base plate.

Sparking plugs
The sparking plugs approved for this car are Champion RN 14 Y. Before fitting the plugs, set the gaps with the aid of a feeler gauge to 0,9 mm. (0.035 in.) and lightly smear the threads with 'Graphogen' grease.

Fig. U40 Ignition distributor

1	Pick-up module
2	Pick-up arm
3	Distributor cover (cap)
4	High tension brush and spring
5	Rotor arm
6	Flash over shield (dust cover)
7	Timing rotor
8	Vacuum advance unit (not connected on cars destined for California)
9	Control unit
10	Distributor body
11	Driving dog and pin
12	Thrust washer
13	Automatic advance mechanism
14	Electronic module assembly

Section U7

Electrical components

The electrical components described in this section would normally appear in Chapter M - Electrical System, however, as they are only used in connection with the emission control system it is thought more practical to include the information in this Chapter.

The components concerned are as follows.

E.G.R. system lock-out switch
E.G.R. system cut-off solenoid
Anti 'run-on' solenoid
Weakening system cut-off solenoid
Weakening system lock-out switch
Full throttle E.G.R. cut-off micro-switch

E.G.R. system lock-out switch

The bi-metal lock-out switch is situated in the engine coolant thermostat outlet elbow (see Fig. U41).

E.G.R. system lock-out switch - To remove

1. Remove the radiator filler cap and drain the engine coolant.
2. Disconnect the electrical leads.
3. Unscrew and remove the three 2 B.A. setscrews spring washers and plain washers.
4. Free the joint and withdraw the lock-out switch.

E.G.R. system lock-out switch - To fit

Fit the lock-out switch by reversing the procedure given for removal, noting the following points.

1. Each setscrew has one spring and one plain washer.
2. The joint faces must be clean and a new gasket fitted.

E.G.R. system lock-out switch - To check

1. Withdraw the protective sheath from the electrical connections.
2. Do not disturb any wiring but connect both electrical connections via a test lamp.
3. Ensure that the engine is cold [i.e. engine coolant temperature below approximately 14°C. (57°F.)].
4. Check that the test lamp bulb is illuminated.
5. Start and run the engine; as the coolant exceeds approximately 14°C. (57°F.) the test lamp bulb should extinguish.
6. Stop the engine and allow to cool, noting that as the coolant temperature drops to approximately 12°C. (54°F.) the test lamp bulb again illuminates.

E.G.R. system cut-off solenoid

This assembly is situated rearmost of the three solenoid assemblies mounted on a platform, adjacent to the 'B' bank carburetter (see Figs. U4 & U42).

E.G.R. system cut-off solenoid - To remove

1. Detach the electrical connections, noting the position of the connections to assist identification when assembling.
2. Detach the rubber hose from either side of the solenoid.
3. Unscrew the two 'cheese-headed' mounting screws and withdraw the solenoid.

E.G.R. system cut-off solenoid - To fit

Fit the cut-off solenoid by reversing the procedure given for removal.

E.G.R. system cut-off solenoid circuit wiring - To check

1. Disconnect the 9 White and 14 White Green cables at the solenoid 'Lucar' connections.
2. Connect a test lamp across the two disconnected cables (in place of the solenoid).
3. Ensure that the engine is cold.

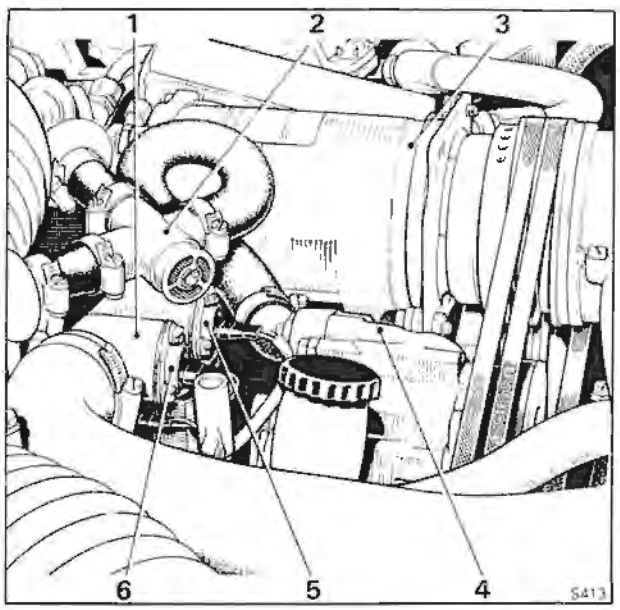

Fig. U41 E.G.R. system lock-out switch

1 Thermostat outlet elbow
2 Three-way connection block
3 Refrigeration compressor
4 Air pump
5 Cooling system booster fan switch
6 E.G.R. lock-out switch

Printed in England

© Rolls-Royce Motors Limited 1977

4. Switch on the ignition and note that the bulb of the test lamp is illuminated.
5. Start and run the engine, as the engine coolant temperature exceeds approximately 14°C. (57°F.) the test lamp bulb should extinguish.
6. Depress the full throttle cut-out micro-switch plunger and check to ensure that the test lamp bulb illuminates. Release the plunger and the test lamp bulb should extinguish.

E.G.R. system cut-off solenoid - To check
1. Detach the carburetter vacuum signal to E.G.R. cut-off solenoid hose at the solenoid and blank off the hose.

Connect a suitable length of hose to the solenoid connection.
2. Clean the open end of the additional hose.
3. Switch on the ignition.
4. Place the hose in the mouth and apply suction.
5. If the operation of the solenoid is correct note that the following conditions apply.

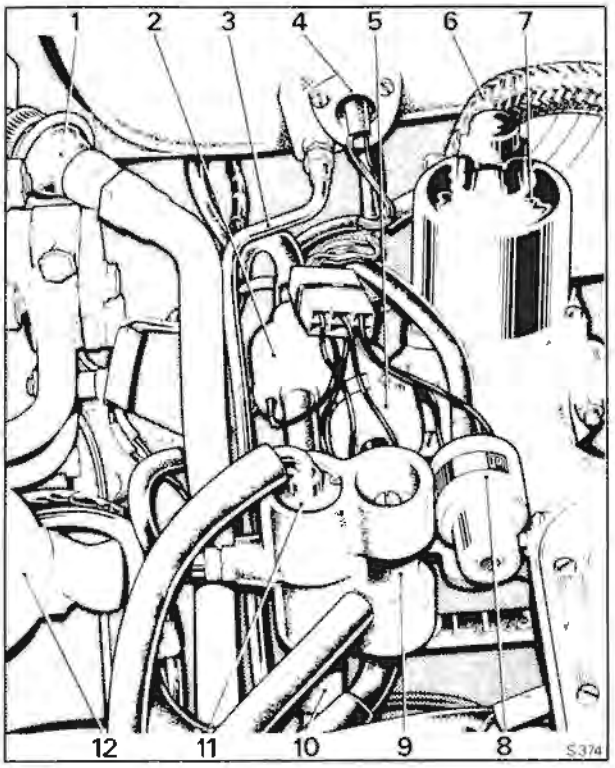

Fig. U42 Solenoid platform
1 Check valve
2 Anti 'run-on' solenoid
3 Choke stove pipe
4 Weakening device cut-out switch
5 Weakening device cut-off solenoid
6 Exhaust gas distribution pipe
7 'B' bank carburetter
8 E.G.R. cut-off solenoid
9 Mixture weakening device
10 Fuel receiver
11 Float chamber vent valve
12 Engine oil filler cap

a. With an engine coolant temperature of below approximately 14°C. (57°F.) blowing air through the hose **should not** be possible
b. With an engine coolant temperature of above approximately 14° C. (57°F.) blowing air through the hose **should** be possible.
c. As the engine coolant temperature falls to 12°C. (54°F.) the conditions described in (a) should again apply.
6. If the operation of the solenoid is suspect, fit a new unit.

Anti 'run-on' solenoid

The anti 'run-on' solenoid is situated on a platform adjacent to 'B' bank carburetter; it is the foremost of the three solenoids fitted on the platform.

The use of low octane fuel often causes an engine to 'diesel' (i.e. to continue to run-on after the ignition has been switched off, particularly when the engine is hot). To prevent this an anti 'run-on' solenoid is fitted between the fuel receiver and the induction manifold (see Figs. U4 and U42). When the ignition is switched off the solenoid valve opens and connects the weakening system to the induction manifold, thus creating a high depression in the float chambers which cuts off the fuel supply.

Anti 'run-on' solenoid - To remove
1. Disconnect the rubber hose from either side of the solenoid.
2. Disconnect the two electrical leads at their 'Lucar' connections.
3. Unscrew and remove the two screws situated one on either side of the solenoid body.
4. Withdraw the anti 'run-on' solenoid.

Anti 'run-on' solenoid - To fit
Fit the anti 'run-on' solenoid by reversing the procedure given for removal.

Anti 'run-on' solenoid circuit wiring - To check
1. Connect a test lamp across the two 'Lucar' connections to the solenoid. **Do not disconnect the two connections.**
2. Switch on the ignition and check that the test lamp bulb illuminates.
3. Switch off the ignition and check that the test lamp bulb is extinguished.

Anti 'run-on' solenoid - To check
1. Ensure that the usual safety precautions are carried out (i.e. parking brake firmly applied, gear range selector lever in Park, etc.).
2. Connect an impulse tachometer in accordance with the manufacturer's instructions.
3. Detach the weakening device pressure tapping cap (see Fig. U24) and connect a manometer capable of reading 0 to 15,5 cm. (0 to 6 in.) of water to the tapping.
4. Disconnect the carburetter vacuum signal to E.G.R. cut-off solenoid hose at the solenoid. Blank off the hose.

5. Start and run the engine at the idle speed setting (650 r.p.m.).
6. Switch off the engine and observe the reading on the manometer. The reading should momentarily increase to approximately 15,5 cm. (6.0 in.) as the engine stops.
7. If the reading does not increase, the operation of the anti 'run-on' solenoid is incorrect.
This could be caused by the following.
a. A blockage in the hose (see Fig. U24) from the anti 'run-on' solenoid to the weakening device.
b. A blockage in the hose (see Fig. U24) from the anti 'run-on' solenoid to the vacuum manifold or in the vacuum manifold.
c. Incorrect wiring to the anti 'run-on' solenoid.
d. Faulty anti 'run-on' solenoid.

Weakening system cut-off solenoid

The weakening device cut-off solenoid is the central of the three solenoids mounted on the platform adjacent to 'B' bank carburetter (see Figs. U4 and U42).

Weakening system cut-off solenoid - To remove

1. Detach the electrical connections, noting the position of the connections to assist identification when assembling.
2. Detach the rubber hose from either side of the solenoid.
3. Unscrew the two 'cheese-headed' mounting screws and withdraw the solenoid.

Weakening system cut-off solenoid - To fit

Fit the cut-off solenoid by reversing the procedure given for removal.

Weakening system cut-off solenoid circuit wiring - To check

1. Connect a test lamp across the two 'Lucar' connections to the solenoid. **Do not disconnect the two connections.**
2. Ensure the engine is cold.
3. Switch on the ignition and start the engine noting that the bulb of the test lamp is illuminated.
4. Run the engine, noting that as the engine warms-up [the inlet air temperature reaches approximately 14° C. (57° F.)] the test lamp bulb should extinguish.
5. Stop the engine and allow to cool, noting that when the engine becomes cold [the air in the intake drops to a temperature of approximately 12° C. (54° F.)] the test lamp bulb again illuminates.

Weakening system cut-off solenoid - To check

1. Detach the carburetter vacuum signal to weakening system cut-off solenoid hose at the solenoid and blank off the hose.
Connect a suitable length of hose to the solenoid connection.
2. Clean the open end of the additional hose.
3. Switch on the ignition.
4. Place the hose in the mouth and apply pressure.
5. If the operation of the solenoid is correct note that the following conditions apply.
a. With a cold engine [i.e. the inlet air temperature below approximately 14° C. (57° F.)] blowing air through the hose **should not** be possible.
b. As the engine warms-up [i.e. an inlet air temperature of approximately 14° C. (57° F.) or above] blowing air through the hose **should** be possible.
c. As the engine again cools [i.e. the inlet air temperature drops below approximately 12° C. (54° F.)] the conditions described in (a) should again apply.

Weakening system lock-out switch

The weakening system lock-out switch is situated in the side of the air intake elbow adjacent to the choke stove take-off pipe and 'B' bank carburetter (see Fig. U42).

Weakening system lock-out switch - To remove

1. Withdraw the protective sheath and detach the electrical connections, noting the position of the connections to assist identification when assembling.
2. Unscrew and remove the three setscrews and spring washers.
3. Withdraw the lock-out switch.

Weakening system lock-out switch - To fit

Fit the lock-out switch by reversing the procedure given for removal.
1. Ensure that the gasket is in a good condition.
2. The setscrews must be fitted with spring washers.
3. The protective sheath must be fitted over the electrical connections.

Weakening system lock-out switch circuit wiring - To check

1. Detach the 9 White/Blue cable from the weakening system lock-out switch.
2. Fit one side of a test lamp to the 9 White Blue cable and the other side to a good earth.
3. Switch on the ignition noting that the test lamp bulb illuminates.
4. Switch off the ignition noting that the test lamp bulb extinguishes.

Weakening system lock-out switch - To check

1. Withdraw the protective sheath from the electrical connections.
2. Do not disturb any wiring but connect both electrical connections via a test lamp.
3. Ensure that the engine is cold [i.e. intake air temperature below approximately 14° C. (57° F.)] and switch on the ignition.
4. Check that the test lamp bulb is illuminated.

Printed in England
© Rolls-Royce Motors Limited 1977
June 1977
T.S.D. 4200
(USA & Canada)

5. Start and run the engine; as the engine warms-up [i.e. the inlet air temperature exceeds approximately 14° C. (57° F.)] the test lamp bulb should extinguish.

Full throttle E.G.R. cut-off micro-switch

The full throttle E.G.R. cut-off micro-switch is mounted on a bracket which is attached to the forward side of 'A' bank carburetter. The micro-switch is operated by a plunger fitted to the throttle linkage (see Fig. U43).

Full throttle E.G.R. cut-off micro-switch - To remove

1. Detach the two 'Lucar' connections adjacent to the micro-switch.
2. Unscrew the two retaining setscrews and withdraw the micro-switch.

Full throttle E.G.R. cut-off micro-switch - To fit

Fit the full throttle E.G.R. cut-off micro-switch by reversing the procedure given for removal noting the following point.

1. After fitting the micro-switch ensure that it is correctly set.

Full throttle E.G.R. cut-off micro-switch circuit wiring To check

1. Disconnect the 9 White and 14 White Green cables at the E.G.R. system cut-off solenoid 'Lucar' connections.

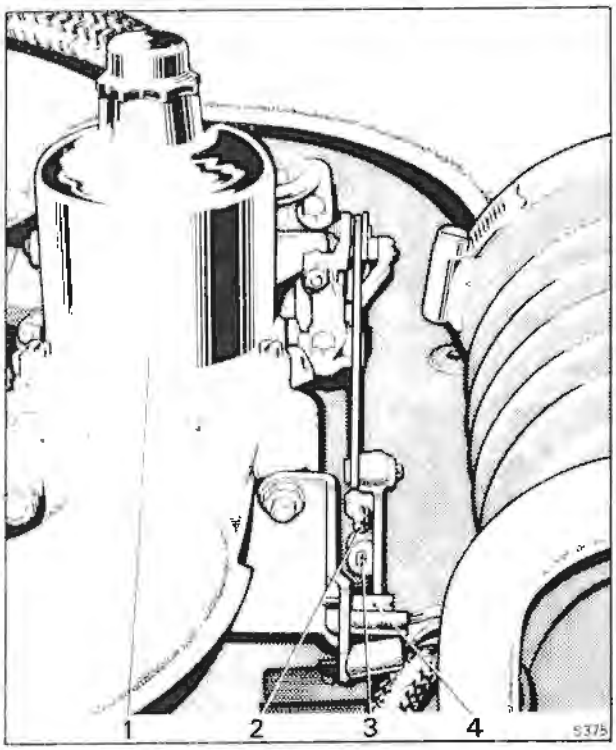

Fig. U43 Full throttle E.G.R. cut-out micro-switch
1 'A' bank carburetter
2 Micro-switch operating plunger
3 Full throttle stop
4 Cut-out micro-switch

2. Connect a test lamp across the two disconnected cables (in place of the solenoid).
3. Detach the two 'Lucar' connections from the full throttle E.G.R. cut-off micro-switch and connect a suitable switch across the cable connection (in place of the micro-switch).
4. Ensure that the engine is cold.
5. Switch on the ignition and note that the test lamp bulb is illuminated.
6. Start and run the engine, as the engine coolant temperature exceeds approximately 14° C. (57° F.) the test lamp bulb should extinguish.
7. Switch on (make the contacts) the switch that has replaced the micro-switch, noting that the test lamp bulb illuminates.

Full throttle E.G.R. cut-off micro-switch - To set

1. It is important to ensure that the engine throttle linkage (refer to Section U5 and Chapter T) and the kick-down micro-switch (refer to Chapter T) are correctly set.
2. Depress the accelerator pedal until it just touches the toeboard mounted kick-down switch (further depression of the pedal requires increased effort).
3. Hold the accelerator in this position.
4. Release the lock-nut and screw the spring loaded operating button (see Fig. U43) away from the E.G.R. full throttle cut-out micro-switch.
5. Screw the spring loaded operating button towards the micro-switch until the micro-switch is heard to 'click'. Secure the lock-nut.
6. Depress the accelerator to operate the toeboard kick-down micro switch and then set the full throttle stop (see Fig. U43) to prevent overloading of the micro-switch.
7. The full throttle stop should be set so that the throttle movement is stopped just before the full spring travel of the micro-switch spring loaded operating button is reached.

Full throttle E.G.R. cut-off micro-switch - To check

To check the full throttle E.G.R. cut-off micro switch carry out the instructions given in E.G.R. system cut-off solenoid circuit wiring - To check, noting in particular Operation 6.

Section U8

Fault diagnosis

Symptoms	Possible Cause
1. Engine will not start. (Starter motor operating).	1. (a) Ignition circuit broken. (b) Failed anti 'run-on' solenoid or failure of electrical supply circuit. (c) Ignition system faulty. (d) Damaged or contaminated ignition high tensior circuit. (e) Blocked fuel feed line, fouled float chamber filters or fouled fuel recirculation restrictor (f) Faulty choke bi-metal coil. (g) Choke solenoid inoperative. (h) Faulty choke 'fast-idle' mechanism. (i) Air leak into induction system (j) Faulty hot idle mixture compensator. (k) Weakening device filter blocked, weakening device air intake non-return valve failed or blockage in rubber connecting hoses. (l) Faulty weakening device cut-off solenoid or failure of electrical supply circuit. (m) Faulty weakening device control switch or failure of electrical supply circuit. (n) Dislodged venturi in weakening device. (o) Flooding of carburetter float chamber or jet. (p) Exhaust gas recirculation valve(s) failed
2. Engine idles very roughly	2. (a) Ignition system faulty. (b) Fouled sparking plugs. (c) Damaged or contaminated ignition high tension circuit. (d) Fouled fuel recirculation restrictor. (e) Air leak into induction system. (f) Faulty hot idle compensator. (g) Weakening device filter blocked, weakening device air intake non-return valve failed or blockage in rubber connecting hoses. (h) Badly worn or damaged carburetter control linkage. (i) Flooding of carburetter float chamber or jet. (j) Sticking carburetter piston. (k) Incorrect operation of carburetter jet compensation. (l) Fouled carburetter float chamber or jet. (m) Exhaust gas recirculation valve(s) failed. (n) Incorrect operation of temperature controlled a intake system.
3. Engine stalls.	3. (a) Ignition circuit broken. (b) Failed anti 'run-on' solenoid or failure of electrical supply circuit. (c) Ignition system faulty. (d) Damaged or contaminated ignition high tensior circuit.

Printed in England

© Rolls-Royce Motors Limited 1977

June 1977

T.S.D. 4200
(USA & Canada)

Symptoms	Possible Cause
3. Engine stalls (continued)	(e) Blocked fuel feed line, fouled float chamber filters or fouled fuel recirculation restrictor. (f) Air leak into induction system. (g) Faulty hot idle mixture compensator. (h) Weakening device filter blocked, weakening device air intake non-return valve failed or blockage in rubber connecting hoses. (i) Badly worn or damaged carburetter control linkage. (j) Flooding of carburetter float chamber or jet (k) Sticking carburetter piston. (l) Incorrect operation of carburetter jet compensation. (m) Fouled carburetter float chamber or jet. (n) Exhaust gas recirculation valve(s) failed.
4. (i) Engine shows signs of power loss evident at high speeds and loading. (ii) Engine misfires particularly on hard acceleration from low speed.	4. (a) Ignition system faulty. (b) Fouled sparking plugs. (c) Damaged or contaminated ignition high tension circuit. (d) Blocked fuel feed line or fouled float chamber filters. (e) Choke system operation incorrect. (f) Sticking carburetter piston. (g) Fouled carburetter float chamber or jet. (h) Faulty exhaust gas recirculation full throttle cut-out switch or failure of electrical supply circuit (i) Exhaust gas recirculation valve(s) failed (j) Failed exhaust gas recirculation valve(s) cut-out solenoid or electrical supply circuit.
5. Engine hesitates or misfires under light load	5 (a) Failed anti 'run-on' solenoid or failure of electrical supply circuit. (b) Ignition system faulty. (c) Fouled sparking plugs. (d) Damaged or contaminated ignition high tension circuit. (e) Blocked fuel feed line or fouled float chamber filters. (f) Air leak into induction system. (g) Faulty hot idle mixture compensator. (h) Weakening device filter blocked, weakening device air intake non-return valve failed or blockage in rubber connecting hoses. (i) Dislodged venturi in weakening device. (j) Flooding of carburetter float chamber or jet. (k) Incorrect operation of carburetter jet compensation. (l) Fouled carburetter float chamber or jet. (m) Exhaust gas recirculation valve(s) failed. (n) Incorrect operation of temperature controlled air intake system.
6. Increase in fuel consumption.	6. (a) Ignition system faulty. (b) Fouled fuel recirculation restrictor. (c) Faulty choke bi-metal coil. (d) Choke system operation incorrect. (e) Air leak into induction system. (f) Faulty hot idle mixture compensator

Symptoms	Possible Cause
6. Increase in fuel consumption (continued)	(g) Weakening device filter blocked, weakening device air intake non-return valve failed or blockage in rubber connecting hoses. (h) Faulty weakening device cut-off solenoid or failure of electrical supply circuit. (i) Faulty weakening device control switch or failure of electrical supply circuit. (j) Air leak in mixture weakening system. (k) Flooding of carburetter float chamber or jet. (l) Sticking carburetter piston. (m) Incorrect operation of carburetter jet compensation. (n) Incorrect purge flow rate. (o) Exhaust gas recirculation valve(s) failed.
7. Decrease in fuel consumption.	7. (a) Air leak in mixture weakening system. (b) Incorrect operation of carburetter jet compensation. (c) Incorrect purge flow rate. (d) Faulty exhaust gas recirculation temperature control switch or failure of electrical supply circuit. (e) Exhaust gas recirculation valve(s) failed.
8. Engine 'backfires' on overrun.	8. (a) Ignition system faulty. (b) Air leak into induction system. (c) Faulty hot idle mixture compensator. (d) Exhaust gas recirculation valve(s) failed.
9. Sudden increase in engine idle speed	9. (a) Faulty choke 'fast-idle' mechanism. (b) Failed carburetter overrun valve.
10. Excessive noise from air injection pump or system.	10. (a) Faulty or damaged air injection pump, relief or check valves, connecting hoses or pipes.

Printed in England
© Rolls-Royce Motors Limited 1977

Section U9

Workshop tools

Tool Number	Description
RH 8090	Pliers - wire hose clips
RH 8841	Dial gauge - carburetter piston lift
RH 8880	Setting jig - throttle levers
RH 8945	Connector - choke stove pipe
RH 9086	Fitting tool - carburetter piston ball race clip
RH 9096	Fitting tool - 'A' bank mixture adjusting screw tamperproof seal
RH 9097	Fitting tool - 'B' bank mixture adjusting screw tamperproof seal
RH 9105	Kit - to adapt RH 8841 to fit S.U. HIF 7 carburetters

Printed in England
© Rolls-Royce Motors Limited 1977
June 1977
T.S.D. 4200
(USA & Canada)

Section U10

Running changes

No. 1 Vehicles destined for high altitude areas in the U.S.A.

To comply with legislation, cars destined for the United States of America that will be operating mainly in designated 'High Altitude Areas' have been subjected to a running change.

High Altitude Areas are defined in the Federal Register - Volume 41 - Number 46 - Dated Monday, March 8th 1976 - as a County or Counties in the U.S.A. wholly located above 1 219 metres (4 000 feet).

The High Altitude running change consists of a kit of parts UE 41707 which contains the components illustrated in Figure 1.

The components should be assemblied onto the engine as shown in Figure 1 and reference made to the appropriate section within Chapter U for specific instructions.

A new emission control label is supplied with the kit of parts, this must be fitted in place of the original label on the heater box and should be legible from the right-hand wing.

The original label will self-destruct when it is removed however, the pieces should be burnt.

In addition, the electrical connection to the refrigeration compressor ambient switch (situated in the heater box adjacent to the ignition distributor) should be altered by disconnecting the 'Lucar' connection in the Yellow/Black cable. Tape the Yellow/Black cable back into the loom and connect the dormant Red/Brown cable to the 'Lucar' and hence the switch.

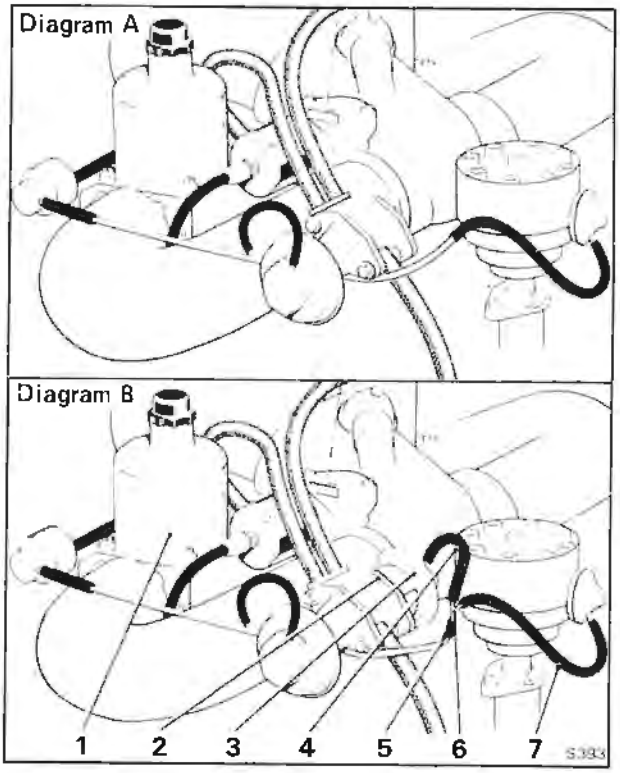

Fig. 1 Running change for High Altitude Cars
Diagram A - Before **Diagram B** - After

1 BEH carburetter needles
2 E.G.R. valve gasket
3 Additional E.G.R. valve
4 E.G.R. valve hose
5 E.G.R. signal hose
6 Metal 'tee' piece pipe
7 Vacuum advance capsule hose

Printed in England

© Rolls-Royce Motors Limited 1977

Chapter U

Emission control systems

Applicable to 1979 model year cars destined for USA & Canada

Section

U1 Introduction
U2 Exhaust emission control system
U3 Fuel evaporative emission control system
U4 Crankcase emission control system
U5 Carburetters and Automatic choke system
U6 Ignition system
U7 Electrical components
U8 Fault diagnosis
U9 Workshop tools
U10 Running changes

Printed in England

© Rolls-Royce Motors Limited 1978

January 1979

T.S.D. 4200
(U.S.A. & Canada
1979 Model year)

Chapter U - 1979 U.S.A. & Canada

Issue record sheet 1

July 1980

The dates quoted below refer to the issue date of individual pages within this chapter.

Section	U1	U2	U3	U4	U5	U6	U7	U8	U9
Page No.									
1	Jan 79	Jan 79	Jan 79	Jan 79	Jan 79	Nov 79	Jul 80	Jan 79	Jan 79
2	Jan 79	Jan 79	Jan 79		Jan 79	Nov 79	Jul 80	Jan 79	
3	Jan 79	Jan 79	Jan 79		Jan 79		Jan 79	Jan 79	
4	Jan 79	Jan 79	Jan 79		Jan 79		Jan 79		
5		Jan 79	Jan 79		Jan 79				
6		Jan 79	Jan 79		Jan 79				
7		Nov 79	Jan 79		Jan 79				
8		Nov 79	Jan 79		Jan 79				
9		Nov 79			Jan 79				
10					Jan 79				
11					Jan 79				
12					Jan 79				
13					Jan 79				
14									
15									
16									
17									
18									
19									
20									
21									
22									
23									
24									
25									
26									
27									
28									
29									
30									
31									
32									
33									
34									
35									
36									
37									
38									
39									
40									
41									
42									
43									
44									
45									
46									
47									
48									

Printed in England

© Rolls-Royce Motors Limited 1980

T.S.D. 4200
(U.S.A. & Canada 1979 Model year)

Section U1

Introduction

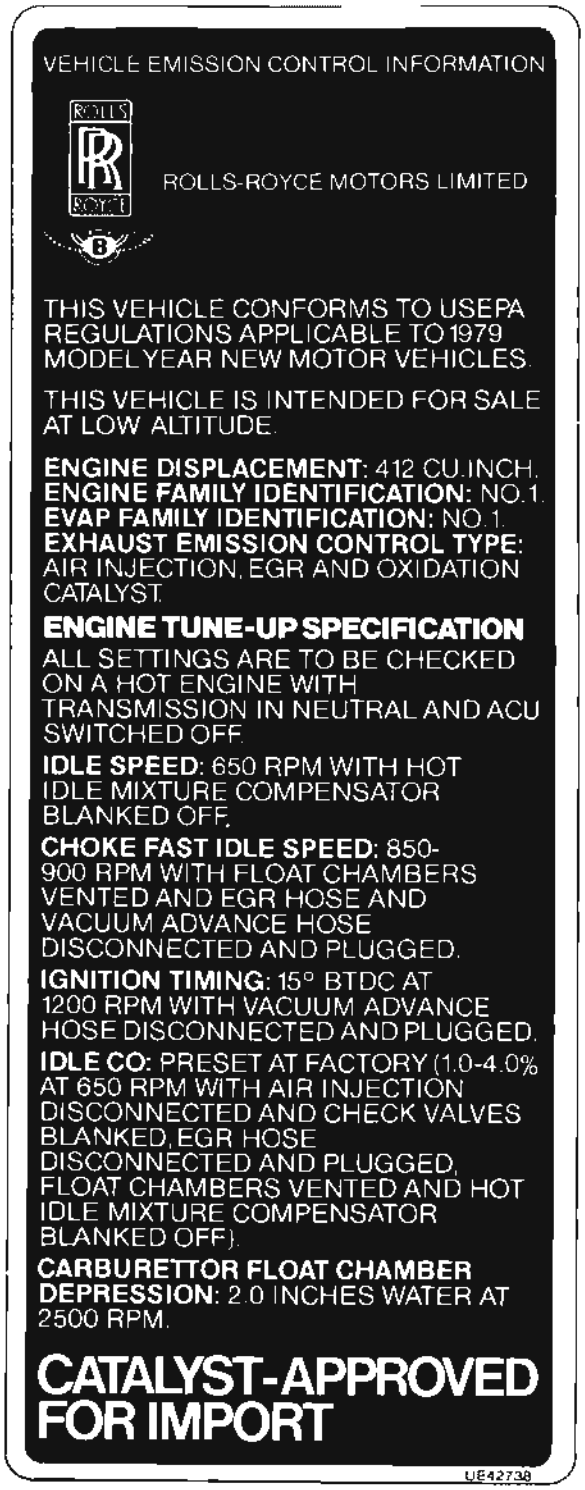
VEHICLE EMISSION CONTROL INFORMATION

ROLLS-ROYCE MOTORS LIMITED

THIS VEHICLE CONFORMS TO USEPA REGULATIONS APPLICABLE TO 1979 MODEL YEAR NEW MOTOR VEHICLES.

THIS VEHICLE IS INTENDED FOR SALE AT LOW ALTITUDE.

ENGINE DISPLACEMENT: 412 CU.INCH.
ENGINE FAMILY IDENTIFICATION: NO.1.
EVAP FAMILY IDENTIFICATION: NO.1.
EXHAUST EMISSION CONTROL TYPE: AIR INJECTION, EGR AND OXIDATION CATALYST.

ENGINE TUNE-UP SPECIFICATION
ALL SETTINGS ARE TO BE CHECKED ON A HOT ENGINE WITH TRANSMISSION IN NEUTRAL AND ACU SWITCHED OFF.

IDLE SPEED: 650 RPM WITH HOT IDLE MIXTURE COMPENSATOR BLANKED OFF.

CHOKE FAST IDLE SPEED: 850-900 RPM WITH FLOAT CHAMBERS VENTED AND EGR HOSE AND VACUUM ADVANCE HOSE DISCONNECTED AND PLUGGED.

IGNITION TIMING: 15° BTDC AT 1200 RPM WITH VACUUM ADVANCE HOSE DISCONNECTED AND PLUGGED.

IDLE CO: PRESET AT FACTORY (1.0-4.0% AT 650 RPM WITH AIR INJECTION DISCONNECTED AND CHECK VALVES BLANKED, EGR HOSE DISCONNECTED AND PLUGGED, FLOAT CHAMBERS VENTED AND HOT IDLE MIXTURE COMPENSATOR BLANKED OFF).

CARBURETTOR FLOAT CHAMBER DEPRESSION: 2.0 INCHES WATER AT 2500 RPM.

CATALYST-APPROVED FOR IMPORT

UE42738

Fig. U1 Emission control certification label

Identification

This Chapter has been written specifically for cars fitted with Emission Control Systems conforming to the North American regulations applicable to 1979 model year new motor vehicles.

It is important therefore that Service Personnel fully understand the contents of this Chapter so that the special servicing can be correctly carried out.

Rolls-Royce and Bentley motor cars conforming to the above regulations and produced to the 1979 model year specification can be readily identified as follows:

1. **Car Serial Number**
A letter K as the last prefix letter of the Car Serial Number (e.g. SRK or LRK, etc.).
2. **Emission Control Certification Label**
A 1979 Emission Control Certification Label (similar to Figure U1) located on top of the automatic air conditioning system heater box, inside the engine compartment.

Engine compartment

Figures U2 and U3 overleaf show the location of the major emission control system components within the engine compartment.

Hose routing diagram

Figure U4 within the Introduction section gives details of the various hose 'runs' and connections in and around the engine compartment, that are associated with the emission control systems components.

Torque tightening

When fitting the various emission control systems components, ensure that the securing nuts and set-screws are tightened to the torque figures given in Chapter P, unless otherwise stated in this Chapter.

Printed in England

© Rolls-Royce Motors Limited 1978

January 1979

T.S.D. 4200
(U.S.A. & Canada
1979 Model year)

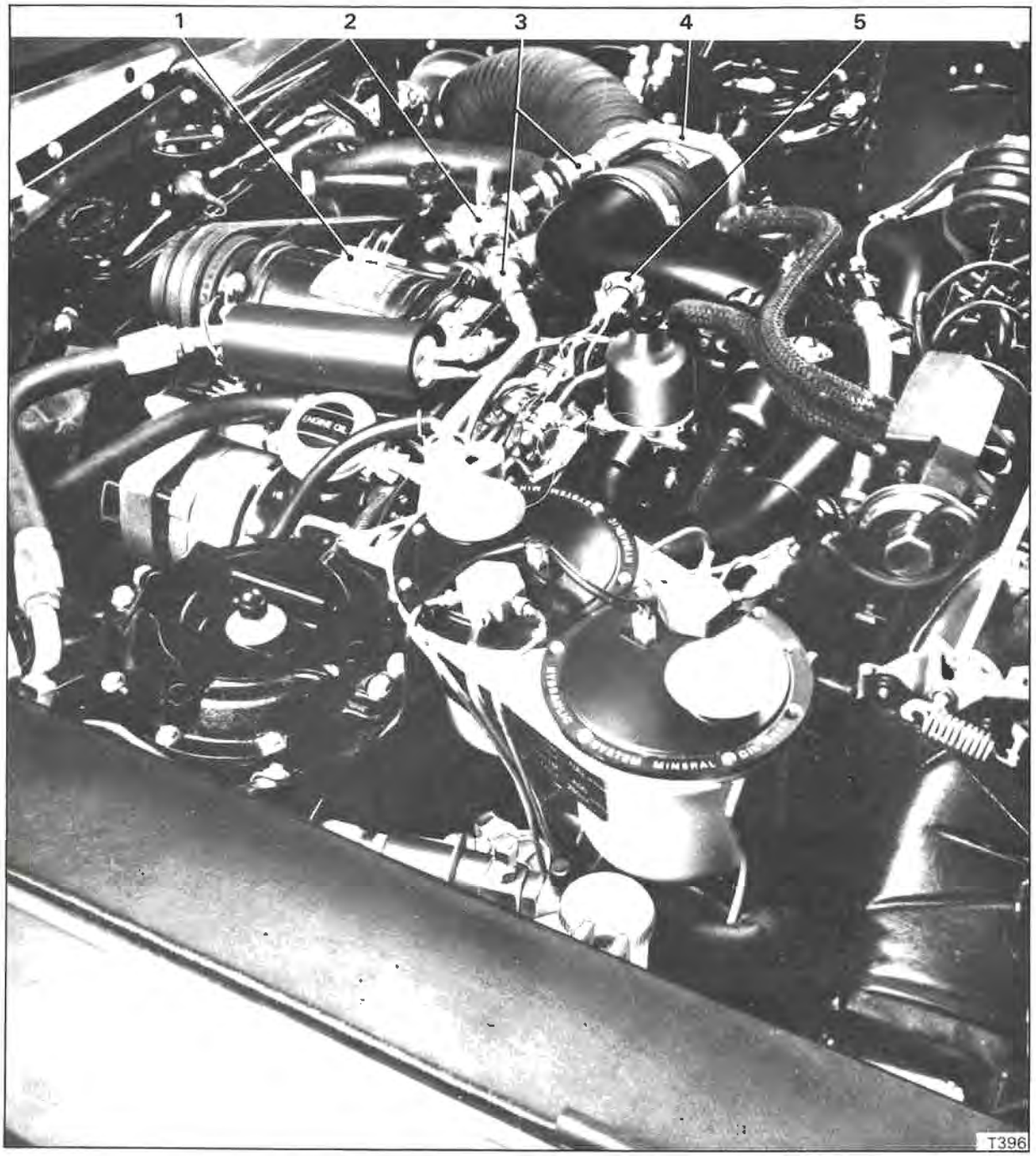

Fig. U2 Engine compartment details (L.H. side)

1 Air pump
2 Connection block and relief valve
3 Check valves
4 'A' bank air manifold
5 Weakening and E.G.R. systems cut-out switch

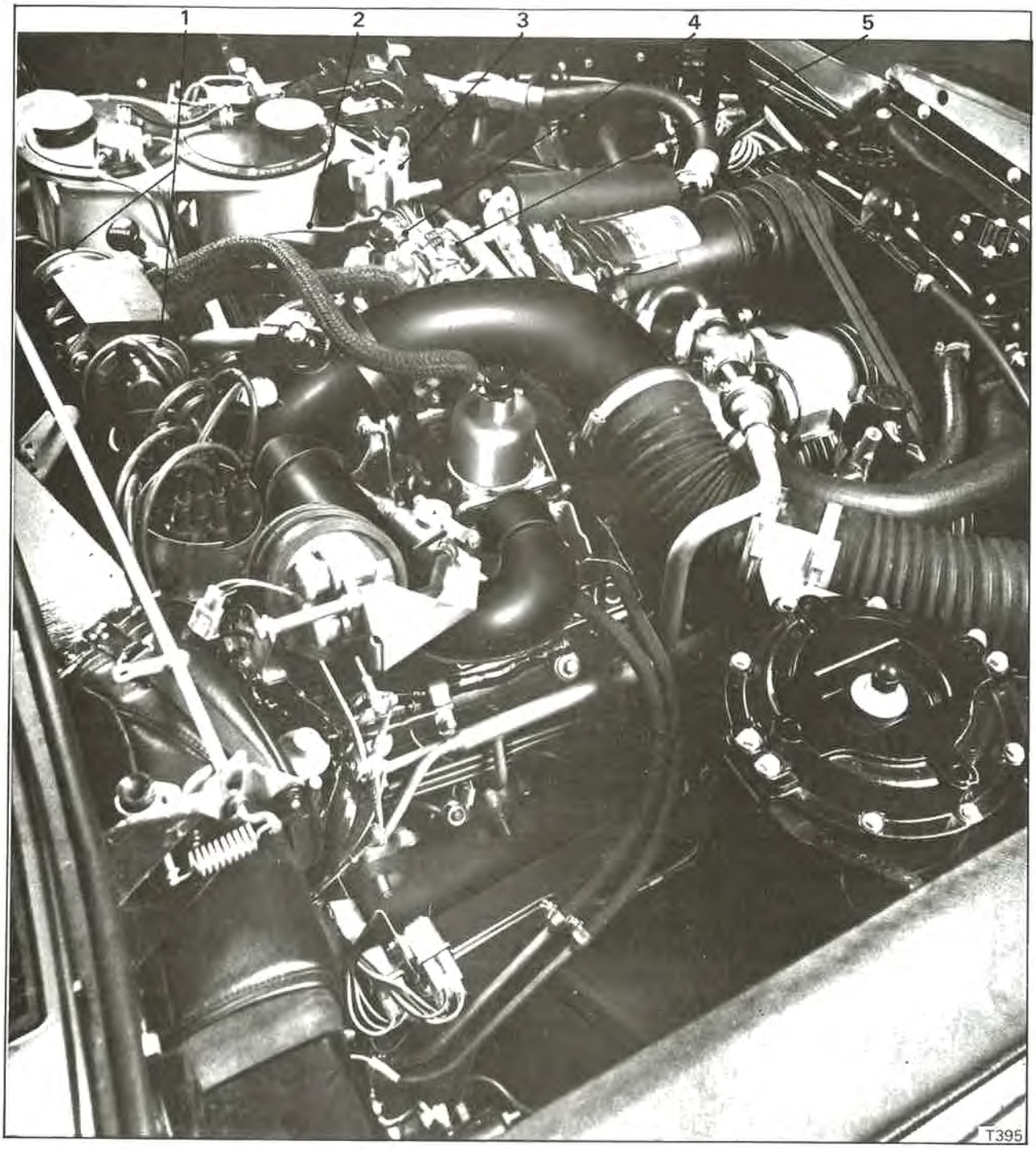

Fig. U3 Engine compartment details (R.H. side)

1 Exhaust gas recirculation valve(s)
2 E.G.R. signal hose
3 Weakening device assembly
4 Weakening and E.G.R. systems cut-off solenoid
5 Anti 'run-on' solenoid

Printed in England

© Rolls-Royce Motors Limited 1978

January 1979

T.S.D. 4200
(U.S.A. & Canada
1979 Model year)

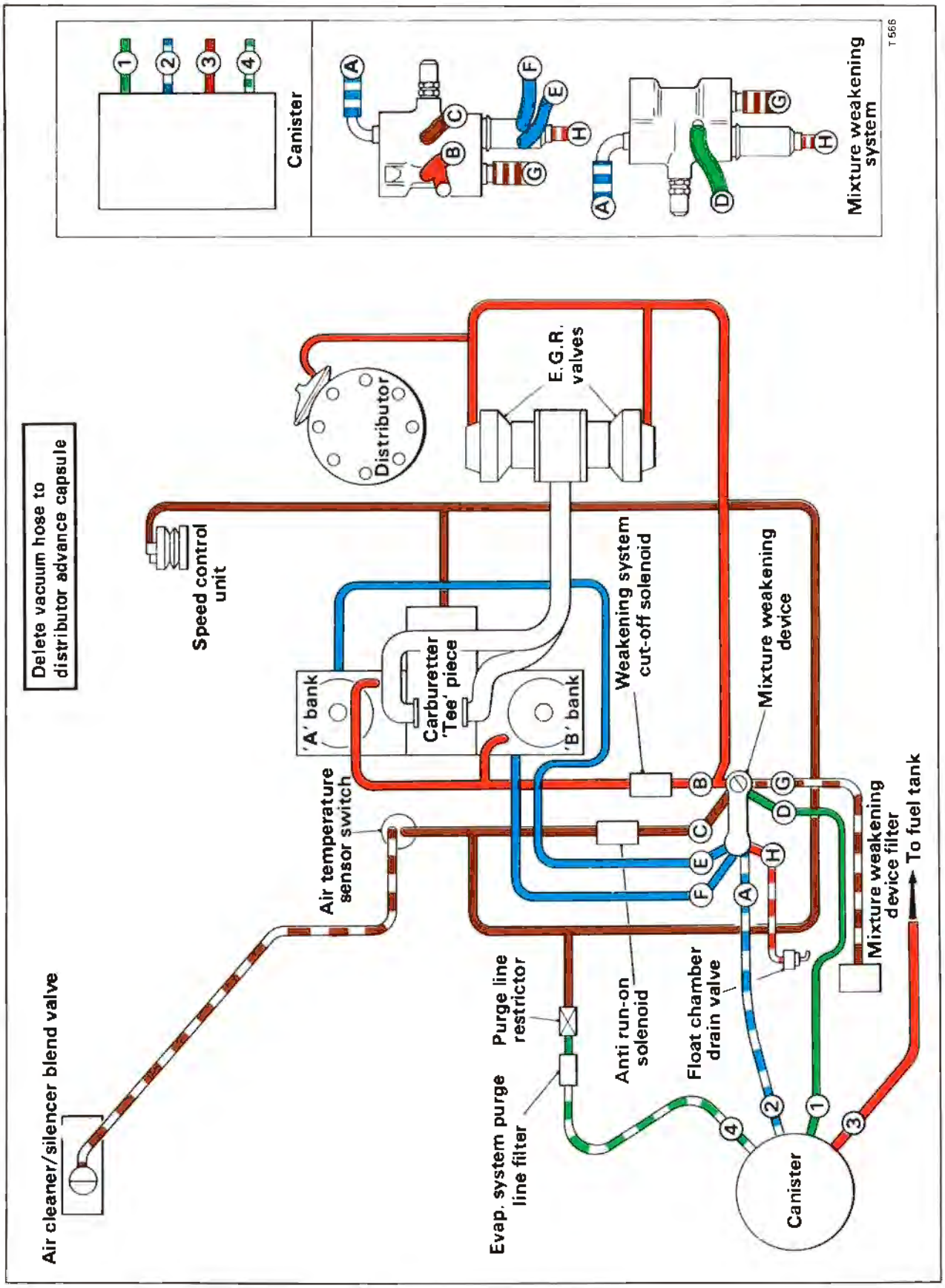

Fig. U4 Hose routing diagram - 1979 model year cars

Section U2

Exhaust emission control system

The Exhaust Emission Control System is designed to reduce the carbon monoxide, unburnt hydrocarbon and oxides of nitrogen content in the exhaust gases.

This system does not eliminate the danger caused by inhaling exhaust gases in a confined area.

Air from the atmosphere is drawn into the engine driven air injection pump through a centrifugal filter. From the pump, a quantity of air proportional to engine speed passes via a three-way connection block (containing a relief valve), through check valves to the air manifolds and then into the exhaust ports. This air combines with the exhaust gases discharged from the combustion chambers and promotes the oxidation process in the exhaust system and catalytic converters. The gases then pass through the exhaust system to atmosphere.

In addition, a proportion of the exhaust gas from the exhaust balance pipe situated between the two downtake pipes, is recirculated through a vacuum operated metering valve(s) into the carburetter 'tee' piece, just downstream of the throttle plates. The recirculated exhaust gas mixes with the inlet charge of fuel/air mixture in the induction manifold and is distributed to the cylinders, lowering the peak combustion temperature and reducing oxides of nitrogen emissions.

Before commencing work on the exhaust emission control system, care should be taken to ensure that the relevant components are not hot.

The system is illustrated in Figure U5 and comprises the following main components.

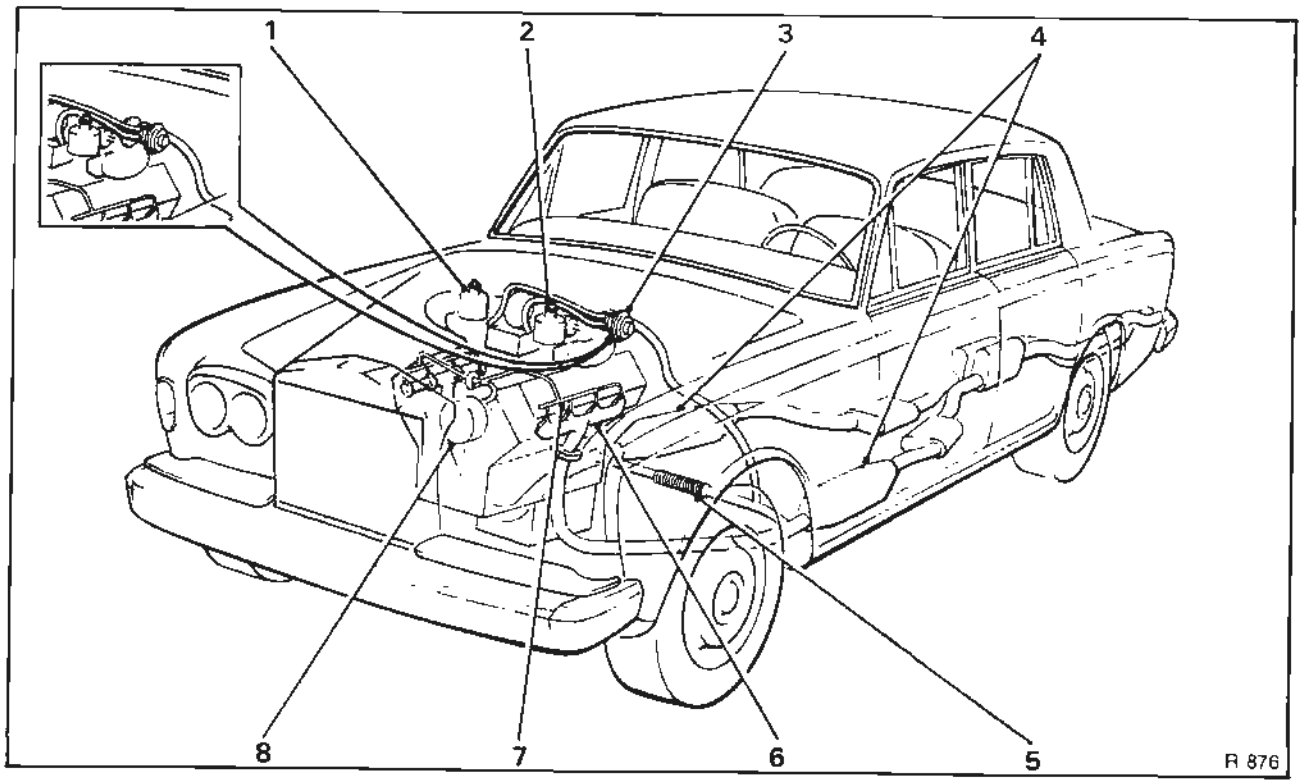

Fig. U5 Exhaust emission control system

1 'A' bank carburetter
2 'B' bank carburetter
3 Exhaust gas recirculation valve(s)
4 Catalytic converters
5 Exhaust system balance pipe
6 'B' bank exhaust manifold
7 'B' bank air manifold
8 Air pump

Printed in England

© Rolls-Royce Motors Limited 1978

January 1979

T.S.D. 4200
(U.S.A. & Canada
1979 Model year)

Air injection system (see Fig. U6)
Air manifolds
Air pump
Check valves
Centrifugal air filter
Pressure relief valve
Three-way connection block

Exhaust gas recirculation system (E.G.R.) (see Fig. U9)
Cut-off solenoid (see Section U7)
Cut-out switch (see Section U7)
Distribution pipes
E.G.R. valve(s)
E.G.R. valve(s) heatshield
Feed pipe
Full throttle cut-out micro-switch (see Section U7)

Oxidation catalyst system (see Figs. U5 and U12)
Catalytic converters
(For the remainder of the Exhaust system refer to Chapter Q).

For details of the servicing and maintenance requirements of the Exhaust Emission Control System, refer to the Service Schedules Manual - T.S.D. 4117

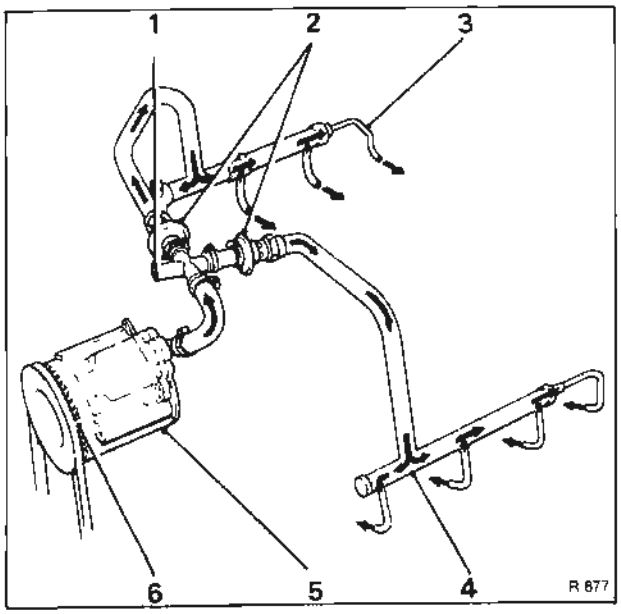

Fig. U6 Air injection system
1 Relief valve
2 Check valves
3 'A' bank air manifold
4 'B' bank air manifold
5 Air pump
6 Air pump intake

Air injection system (see Figs. U5 and U6)
A detailed description of the air injection system is given at the beginning of this section.

Air injection system - To test
1. Connect an electric impulse tachometer to the engine in accordance with the manufacturer's instructions.
2. Start and run the engine at a constant speed of 2 000 r.p.m., check that air does not escape from the relief valve.
3. If air does escape during Operation 2, check that the correct (blue) setting plug is fitted to the pressure relief valve.
4. If the system does not operate as described in Operation 2, stop the engine and fit a new three-way connection block assembly (containing the pressure relief valve).
5. Repeat Operation 2.
6. Stop the engine and remove the test equipment.

Air injection system - Leak check
Check the air injection system for air leaks by carrying out the following sequence of operations.
1. Ensure that the ignition is switched off.
2. Visually inspect the condition of all hoses, pipes and joints associated with the air injection system.
3. Ensure that all worm drive clips are tight.
4. Start the engine and listen carefully for any evidence of an air leak from the system.
5. If an air leak is suspected it is permissible to coat the component or hose with a soap solution, soap bubbles will confirm an air leak.

Air injection system - Fault diagnosis
To diagnose malfunctioning of the air injection system refer to Section U8 - Fault diagnosis of this Chapter.

Air manifolds
The air manifolds convey air from the check valves to the engine exhaust ports. One air manifold is fitted to each bank of cylinders and is identified as 'A' bank air manifold or 'B' bank air manifold.

To remove an air manifold, unscrew the check valve union and the four ¾ in. A/F adapters in the cylinder head.

The 'A' bank air manifold is reasonably straight forward to withdraw but 'B' bank air manifold will require the disconnecting of several other hoses and pipes (e.g. choke stove pipes, fuel evaporative weakening device hoses and pipes, etc.), to facilitate withdrawal.

Fit the air manifolds by reversing the procedure given for removal, noting that the check valve union has a tapered thread. All the adapters in the cylinder head should be torque tightened to the figures given in Chapter P.

Printed in England
© Rolls-Royce Motors Limited 1978

Air pump
The air pump is of the rotary vane type and is belt driven from the engine coolant pump. The centrifugal air filter is an integral part of the pump and is situated between the pump body and the pump driving pulley.

Air pump - To remove (see Fig. U7)
1. Disconnect the battery (refer to Chapter M).
2. Unscrew the worm drive clip and detach the hose from the pump to the three-way connection block, at the pump. Blank off the hose and pump connections to prevent the ingress of dirt, etc.
3. Slacken the two $^{9}/_{16}$ in. A/F setscrews on the drive belt adjustment strut; remove the upper bolt.
4. Remove the drive belt from the pulley.
5. Support the air injection pump and unscrew and remove the $^{9}/_{16}$ in. A/F mounting setscrew situated on the opposite side of the pump pulley.

Air pump - To fit
Fit the air pump by reversing the procedure for removal noting the following.
1. Ensure that the driving belt is adjusted so that an applied force of 5,5 kg. (12 lb.) mid-way between the air injection pump pulley and the coolant pump pulley causes the belt to deflect 9,5 mm. (0.375 in.).

Air pump pulley
1. To remove, unscrew and remove the three setscrews situated around the centre of the pulley. Withdraw the pulley.
2. To fit the pulley, reverse the procedure given for removal ensuring that the setscrews are torque tightened to the correct figure (see Chapter P).

Check valves
The check valves are non-return valves (one-way valves) and one is fitted into the air injection system between the air pump and the air manifolds, for each bank of cylinders.

The check valves prevent the backflow of exhaust gases into the air lines or air pump, they operate whenever the exhaust back pressure exceeds the air pump delivery pressure at high speed and/or in the case of air pump drive belt failure.

To remove a check valve, slacken the worm drive clip situated on the air pump to check valve hose. Unscrew the union from the air manifold and withdraw the check valve. Fit a check valve in the reverse order.

Pressure relief valve (see Figs. U6 and U8)
The spring loaded pressure relief valve is permanently housed within the three-way connection block, its function is to allow excess air to escape from the air injection system when the check valves are closed. The relief valve prevents damage to the pump vanes and excess exhaust temperatures under extreme operating conditions.

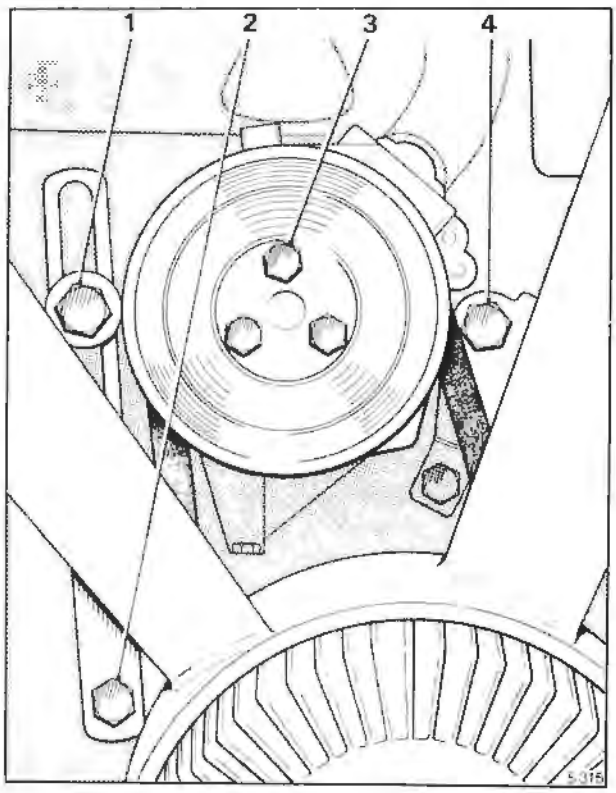

Fig. U7 Air injection pump
1 Adjustment strut upper setscrew
2 Adjustment strut pivot setscrew
3 Pulley retaining setscrews
4 Air pump mounting setscrew

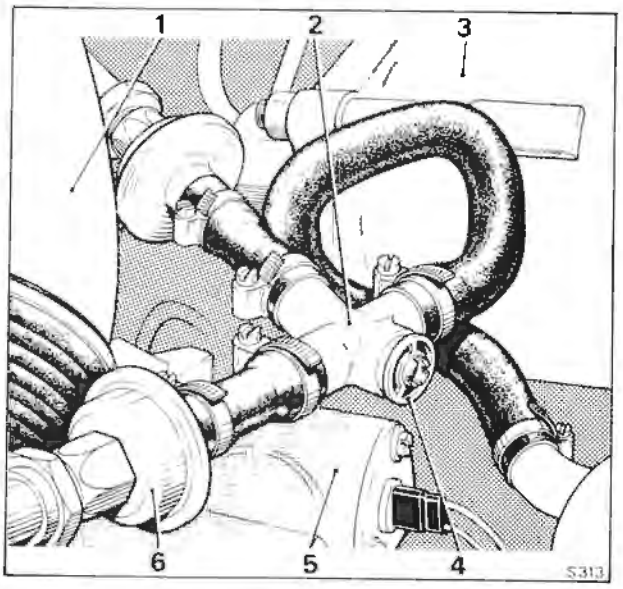

Fig. U8 Three-way connection block
1 Carburetter air intake
2 Three-way connection block
3 Refrigeration compressor
4 Air injection system pressure relief valve
5 Thermostat elbow
6 Check valve

January 1979
T.S.D. 4200
(U.S.A. & Canada
1978 Model year)

If it becomes necessary to remove the pressure relief valve three-way connection block, slacken the worm drive clips on the three connecting hoses and withdraw the assembly.

To test the pressure relief valve, blank off the two connections for the check valves and apply pressure to the connection from the pump; ensure that the relief valve operates within the following acceptable limits.
0,5 kg/sq.cm. to 0,6 kg/sq.cm.
(7.4 lb/sq.in. to 8.4 lb/sq.in.)

Exhaust gas recirculation system (E.G.R.)

(see Figs. U5 and U9)
A detailed description of the exhaust gas recirculation system (E.G.R.) is given at the begining of this section.

Distribution pipes
The distribution pipes convey the recirculated exhaust gas from the E.G.R. valve(s) into the carburetter 'tee' piece.

Distribution pipes - To remove
1. Using a 7/16 in. A/F spanner unscrew and remove the two nuts and washers securing the distribution pipes to the E.G.R. valves mounting block.
2. Unscrew the 7/16 in. A/F setscrews retaining the heatshield to 'B' bank air horn; collect the washers.
3. Ease the mounting block rearward to free the joint face; discard the gasket.
4. Support the weight of the distribution pipes.
5. Unscrew and remove the four 2 B.A. setscrews and washers securing the two distribution pipe flanges to the carburetter 'tee' piece.
6. Withdraw the distribution pipes and discard the gaskets.

Distribution pipes - To fit
Fit the distribution pipes by reversing the procedure given for removal, noting the following points.
1. Ensure that all joint faces are clean and free from carbon deposits.
2. Coat the joint faces and gaskets at the carburetter 'tee' piece with 'Wellseal'.

Distribution pipes - To clean
1. Remove the distribution pipes as described in Distribution pipes - To remove.
2. With a pointed scraper clean as much carbon deposit as possible from inside the distribution pipes and the joint faces.
3. Using wire brushes complete the cleaning operation on the distribution pipes.
4. With a pointed scraper remove the carbon

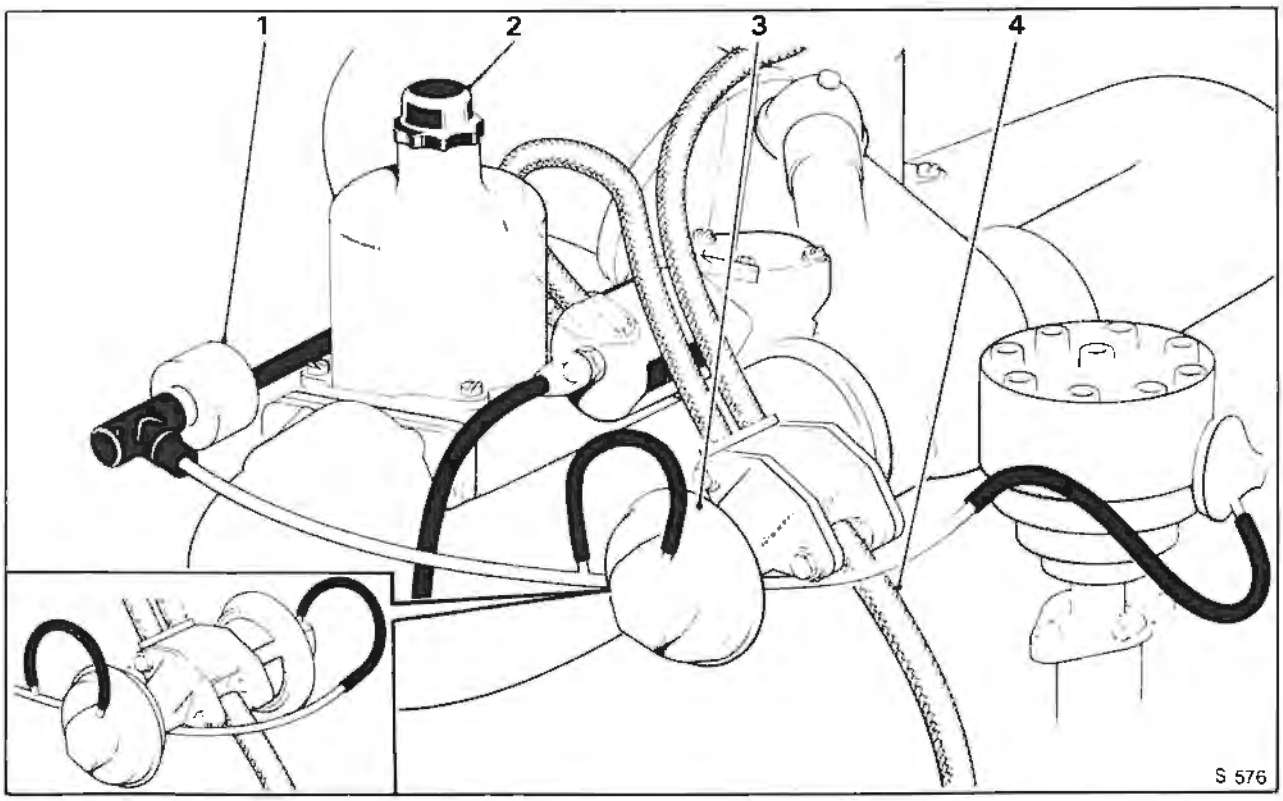

Fig. U9 Exhaust gas recirculation system
1 Weakening device and E.G.R. cut-out solenoid
2 'B' bank carburetter
3 E.G.R. valve(s)
4 E.G.R. feed pipe

deposits from the carburetter 'tee' piece connection orifices.

5. Before fitting the distribution pipes thoroughly blow-out the pipes and carburetter 'tee' piece connections with compressed air.

6. Fit the distribution pipes as described in Distribution pipes - To fit.

E.G.R. valve(s) (see Fig. U10)

A proportional flow recirculation system is used. Exhaust gas from the balance pipe between the two downtakes of the dual exhaust system passes through a metering orifice and is recirculated into the carburetter 'tee' piece. Atmospheric pressure is maintained downstream of the metering orifice by means of the control valve so that the recirculation flow is proportional to the relative effective areas of the metering orifice and the main exhaust system.

Dilution of the inlet charge with exhaust gas lowers the peak combustion temperature and reduces the formation of oxides of nitrogen.

A vacuum operated control valve with integral pressure transducer is used and the metering orifice is incorporated in an extension of the valve seat. A carburetter throttle gated vacuum signal is used to operate the valve. This signal is modulated by the integral transducer valve and applied to the control valve diaphragm so that the control valve lift is adjusted to maintain a constant control pressure, just above atmospheric pressure between the metering orifice and the control valve seat.

When the engine load is increased, the control pressure exceeds the transducer valve setting and the transducer valve closes applying the full vacuum signal to the control valve diaphragm and thus opening the control valve and increasing the E.G.R. flow. Similarly, as the engine load is reduced, the control pressure becomes less than the transducer valve setting and the transducer valve opens, venting the diaphragm chamber to atmosphere and causing the control valve to close and reduce the E.G.R. flow. The transducer valve constantly cycles adjusting the control valve lift to maintain a constant control pressure under all normal operation conditions.

The use of a throttle gated vacuum signal ensures complete control valve closure at idle to maintain good idle quality.

To improve starting and drive-away under low temperature conditions a solenoid valve (see Section U7) interrupts the carburetter vacuum signal to the E.G.R. valve until a predetermined air intake temperature is reached.

A micro-switch operated by the accelerator pedal (see Section U7) also controls this solenoid to provide E.G.R. cut-out at full throttle. At high engine speed the exhaust gas back pressure is high. As a result, the integral transducer valve directs full carburetter vacuum signal to the control valve. At high engine speed under full throttle

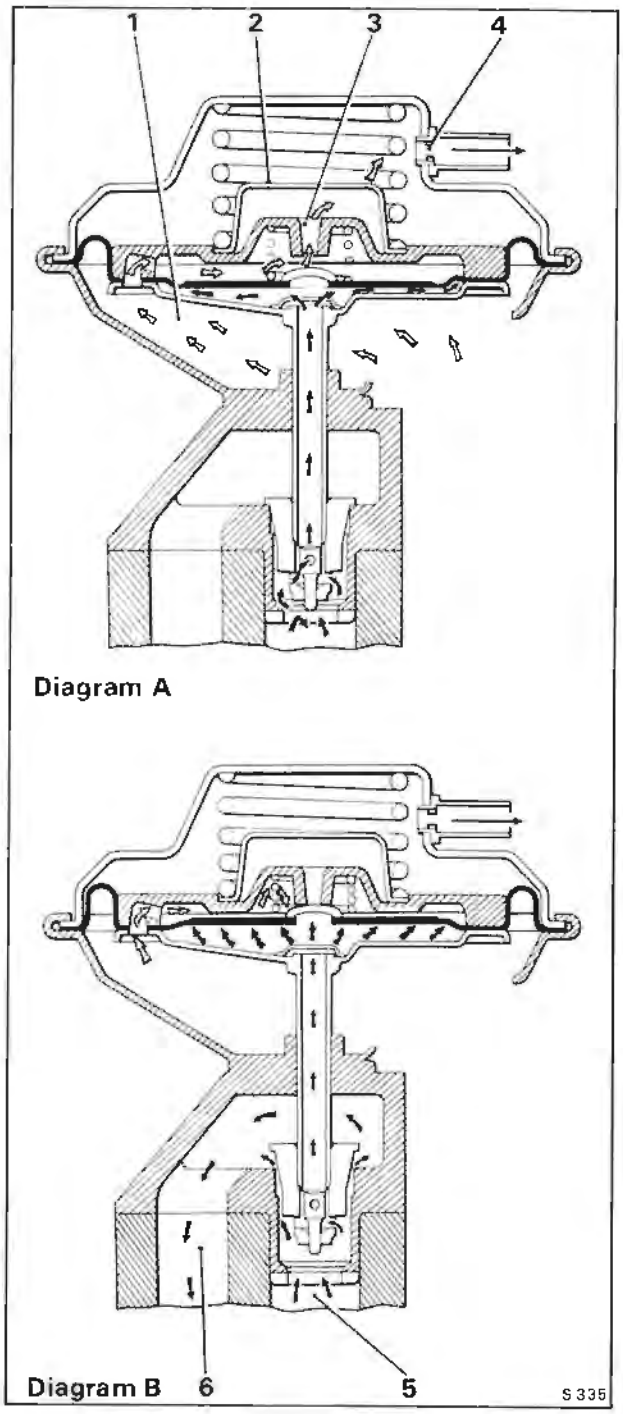

Fig. U10 Exhaust gas recirculation valve

Ambient air ⇦
Exhaust gas ⬅

Diagram A - Exhaust pressure below operating value

1 Ambient air
2 Air filter
3 Air bleed
4 Restrictor

Diagram B - Exhaust pressure above operating value

5 Exhaust gas from balance pipe
6 Exhaust gas to carburetter 'tee' piece

Printed in England
© Rolls-Royce Motors Limited 1978

operation the air intake restriction is sufficient to produce a carburetter vacuum signal large enough to open the control valve, this results in excessive flow under these conditions which would seriously degrade performance and reduce the safety margin for overtaking.

On cars destined for California or areas designated as High Altitude Areas the exhaust gas recirculation system employs twin metering valves, both having identical calibrations. Other cars are fitted with a single metering valve.

High Altitude Areas

To comply with legislation, cars destined for the United States of America that will be operating mainly in designated 'High Altitude Areas' have been subjected to the following change in specification.

High Altitude Areas are defined in the Federal Register - Volume 41 - Number 46 - Dated Monday, March 8th 1976 - as a County or Counties in the U.S.A. wholly located above 1 219 metres (4 000 feet).

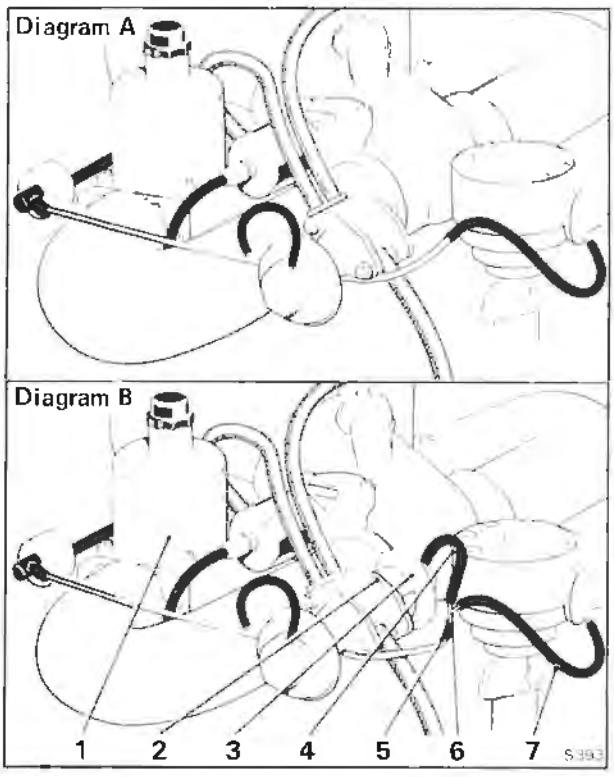

Fig. U11 Running change for High Altitude Cars
Diagram A - Before **Diagram B** - After
1 BEH carburetter needles
2 E.G.R. valve gasket
3 Additional E.G.R. valve
4 E.G.R. valve hose
5 E.G.R. signal hose
6 Metal 'tee' piece pipe
7 Vacuum advance capsule hose

The High Altitude change consists of a kit of parts which contains the components illustrated in Figure U11.

The components should be assemblied onto the engine as shown in Figure U11 and reference made to the appropriate section within this Chapter for specific instructions.

A new emission control label is supplied with the kit of parts, this must be fitted in place of the original label on the heater box and should be legible from the right-hand wing.

The original label will self-destruct when it is removed however, the pieces should be burned.

In addition, the electrical connection to the refrigeration compressor ambient switch (situated in the heater box adjacent to the ignition distributor) should be altered by disconnecting the 'Lucar' connection in the Yellow/Black cable. Tape the Yellow/Black cable back into the loom and connect the dormant Red/Brown cable to the 'Lucar' and hence the switch.

E.G.R. valve(s) - To remove

1. Detach the small diameter rubber hose from the valve.
2. Unscrew and remove the two ½ in. A/F nuts retaining the valve to the mounting flange; collect the two washers.
3. Withdraw the valve and remove the gasket from the mounting flange.

Note

On cars fitted with a twin valve system a similar procedure should be adopted for the additional valve

E.G.R. valve(s) - To fit

Fit the valve(s) by reversing the procedure for removal, noting the following points.

1. Ensure that the valve pintle (see Fig. U10) is secure on the valve stem.
2. Ensure that the valve and mounting flange joint faces are clean and free from carbon deposits.
3. Always use a new mounting flange gasket.

E.G.R. valve(s) - To clean

1. Remove the valve(s) as described in E.G.R. valve(s) - To remove.
2. Using a scraper, remove all carbon film from the valve and mounting flange faces; complete the operation with a wire brush.
3. Clean the carbon from the valve using a wire brush fitted into a portable drill. Take care not to damage the valve seating area.
4. Thoroughly blow out the valve with compressed air to ensure that all loose carbon particles are removed.
5. Upon completion of the cleaning operations, fit the valve to the engine mounting flange as described in E.G.R. valve(s) - To fit.

Printed in England
© Rolls-Royce Motors Limited 1979

E.G.R. valve(s) - To check

The E.G.R. system is automatically controlled by exhaust backpressure to maintain a constant E.G.R. proportion over normal road load conditions. Checks to ensure the correct operation of the valve(s) are only required under no load conditions as follows.

1. Connect an electric impulse tachometer to the engine in accordance with the manufacturer's instructions.
2. Ensure that the parking brake is firmly applied and that the gear range selector is in the 'Park' position.
3. Ensure that the pressure tapping cap fitted to the weakening device is correctly tightened.

Start and run the engine until normal operating temperature is attained.

4. Ensure that the engine has run for at least 25 mins. after the engine coolant thermostat has opened.
5. Allow the engine to return to the idle speed.
6. Increase the engine speed slowly noting the operation of the E.G.R. valve(s).
7. The E.G.R. valve(s) should commence to open at the following engine speeds.

All territories (except California)
700 r.p.m. to 1 000 r.p.m.
California
700 r.p.m. to 950 r.p.m.

If the valve(s) either fail to open or open late check for the following possible causes.

a. Failed E.G.R. cut-out switch (see Section U7).
b. Failed E.G.R. cut-off solenoid (see Section U7).
c. Failed E.G.R. full throttle cut-out micro-switch (see Section U7).
d. Leak or blockage in the carburetter signal pipe to weakening device cut-off solenoid.
e. Leak or blockage in the E.G.R. valve signal pipe or hose from the E.G.R. cut-out solenoid to the E.G.R. valve(s).
f. Advanced ignition timing (see Section U6).
g. Sealing rings incorrectly fitted (see Catalytic converter - To fit).

If the valve(s) begin to open early check for the following possible cause.

a. Retarded ignition timing (see Section U6).

8. If the E.G.R. valve(s) do not function correctly after carrying out Operations 1 to 7 inclusive, replace the offending valve(s) with new units.
9. Carry out Operations 1 to 7 inclusive.

E.G.R. feed pipe

The E.G.R. feed pipe conveys exhaust gas that is to be recirculated from the exhaust balance pipe to the exhaust gas recirculation valve(s).

E.G.R. feed pipe - To remove

1. Unscrew the two $\frac{7}{16}$ in. A/F nuts from the clamp at the upper end of the feed pipe (see Fig. U12).
2. Collect the two washers and 'split' the clamp from the spherical joint.

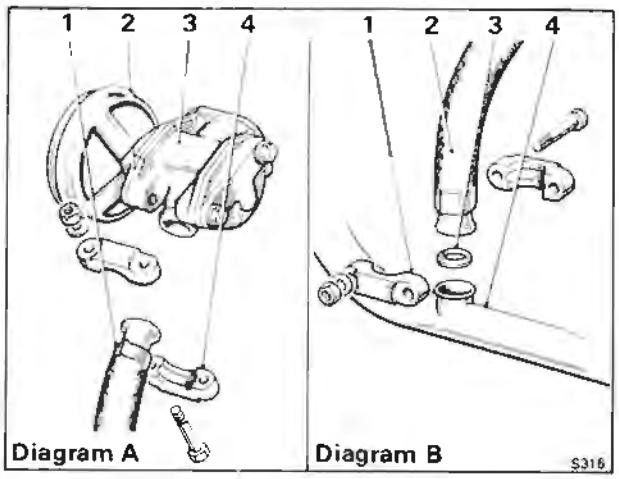

Fig. U12 E.G.R. feed pipe joints

Diagram A - Upper joint
1 Feed pipe
2 E.G.R. valve
3 E.G.R. valve mounting block
4 Clamp bracket

Diagram B - Lower joint
1 Clamp bracket
2 Feed pipe
3 Sealing ring
4 Exhaust balance pipe

3. Repeat Operations 1 and 2 on the lower joint adjacent to the exhaust system balance pipe. Collect the sealing ring.

E.G.R. feed pipe - To fit

Fit the E.G.R. feed pipe by reversing the procedure given for removal, noting the following.

1. Ensure that the joint faces are clean and free from carbon deposits.

E.G.R. valve(s) heatshield - To remove

1. Slacken the two forward ½ in. A/F nuts one on either side of the mounting flange.
2. Unscrew and remove the two $\frac{7}{16}$ in. A/F setscrews retaining the heatshield to the rear of 'B' bank air horn; collect the washers.
3. Ease the assembly forward to release the heatshield slots from the retaining studs.
4. Withdraw the heatshield.

E.G.R. valve(s) heatshield - To fit

Fit the heatshield by reversing the procedure given for removal.

Oxidation catalyst system (see Figs. U5 and U13)

A dual exhaust system is used. The catalytic converters are situated in the forward underfloor area, in place of the conventional front silencers (see Fig. U5).

Each converter contains two catalyst blocks of unequal length and has sufficient volume to perform the dual functions of converter and silencer (see Fig. U13). Two converters are fitted to each car,

November 1979
T.S.D. 4200
(U.S.A. & Canada
1979 Model year)

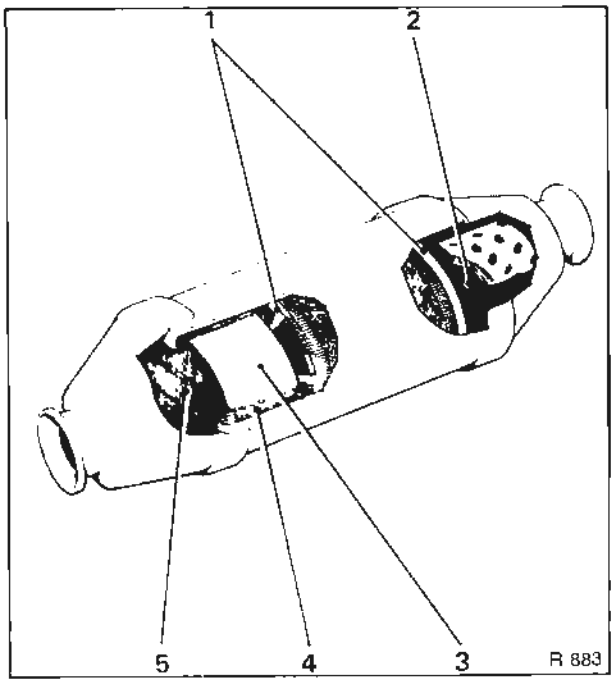

Fig. U13 Catalytic converter assembly
1 Stainless steel mesh retaining rings
2 Silencing chamber
3 Fireclay coating
4 Stainless steel mesh
5 Monolithic catalyst

one for each bank of the engine cylinders.

A platinum group metal catalyst on a ceramic monolith support has been chosen for optimum conversion efficiency and rapid warm-up. Two separate blocks are used to minimise the effect of thermal shock, and these are positioned to give good gas distribution and effective utilisation of the catalyst volume.

The catalyst promotes the reaction between the residual hydrocarbons and carbon monoxide in the exhaust and the secondary air injected into the exhaust ports.

Catalytic converter protection

To protect the catalytic converter from possible damage the following precautions should always be observed.

Unleaded gasoline

Use unleaded gasoline only (91 RON Min.). The use of leaded gasoline will result in a substantial reduction in the performance of the catalyst. Under no circumstances add fuel system cleaning agents to either the fuel tank or carburetters for induction into the engine, as these materials may have a detrimental effect on the catalytic converter.

Fuel

Do not allow the vehicle to run out of fuel. If the vehicle does run out of fuel at a high speed, possible damage to the catalyst could result.

Engine malfunction

If the engine misfires or suffers from a lack of power which could be attributed to a malfunction of either the ignition or fuel systems, the vehicle should be driven only at low speed and the fault rectified as soon as possible. Driving at high speeds with a malfunction in either of these systems could cause overheating and consequent damage to the catalyst.

Catalytic converter - To remove

1. Remove the screws retaining the relevant section(s) of the grass-fire shields below the catalytic converter.

Note
Take care when removing the shields as the sharp edges could cause injury to the operators hands.

2. Using a $^{9}/_{16}$ in. A/F spanner, slacken the nuts on the spherical joint clamps immediately to the front and rear of the catalytic converter.
3. Support the weight of the catalytic converter and remove the nuts from the spherical joint clamps. Dismantle and remove the clamps.
4. Withdraw the catalytic converter and collect the spherical sealing rings from between the pipe connections.

Catalytic converter - To fit

Fit a catalytic converter by reversing the procedure given for removal, noting the following.

1. The seal rings and pipe flares must be thoroughly clean and free from scale and may be lightly dressed with fine emery cloth if required.
2. The clamp bolt threads should be lightly oiled to prevent binding during assembly and the spherical faces of the sealing rings and the grooves in the clamps should be smeared with a graphite lubricant, to ensure correct alignment of the pieces upon assembly.
3. Fit the catalytic converter assembly complete with seal rings, then loosely fit the joint clamps.

Note
The catalytic converter assembly should be fitted with the square shaped catalyst cells (visible when looking along the short pipe into the catalytic converter assembly) towards the front of the vehicle

and the perforated tube (visible when looking along the short pipe into the catalytic converter assembly) towards the rear of vehicle.

The sealing rings should be fitted between the pipe connections so that the sealing ring with the smaller diameter hole in the centre is fitted to the rear of the catalytic converter assembly.

Printed in England
© Rolls-Royce Motors Limited 1979

November 1979
T.S.D. 4200
(U.S.A. & Canada
1979 Model year)

Printed in England
© Rolls-Royce Motors Limited 1978

Section U3

Fuel evaporative emission control system

The Fuel Evaporative Emission Control System eliminates direct venting of the fuel system, thus preventing the release of unburnt hydrocarbons into the atmosphere.

Vapour from the fuel system is collected and stored in a charcoal filled canister. The canister is purged whenever the engine is running and the stored fuel vapour is extracted from the charcoal and burnt in the engine.

The system is illustrated in Figure U14 and comprises the following main components.

Canister (see Fig. U15)
Carbon granules (charcoal)
Float chamber connection
Fuel tank connection
Polyurethane air filter
Purge line connection
Weakening device connection

Fuel tank (see Fig. U17)
Expansion tank
Filler cap (combined pressure/vacuum relief valve)
Rollover valve

Purge line (see Fig. U14)
Air filter
Restrictor

Weakening device (see Figs. U19 and U20)
Adjustable orifice
Air filter
Anti 'run-on' solenoid
Cut-off solenoid
Cut-out switch
Float chamber drain valve
Float chamber vent valve
Fuel receiver chamber
Non-return valves
Venturi chamber

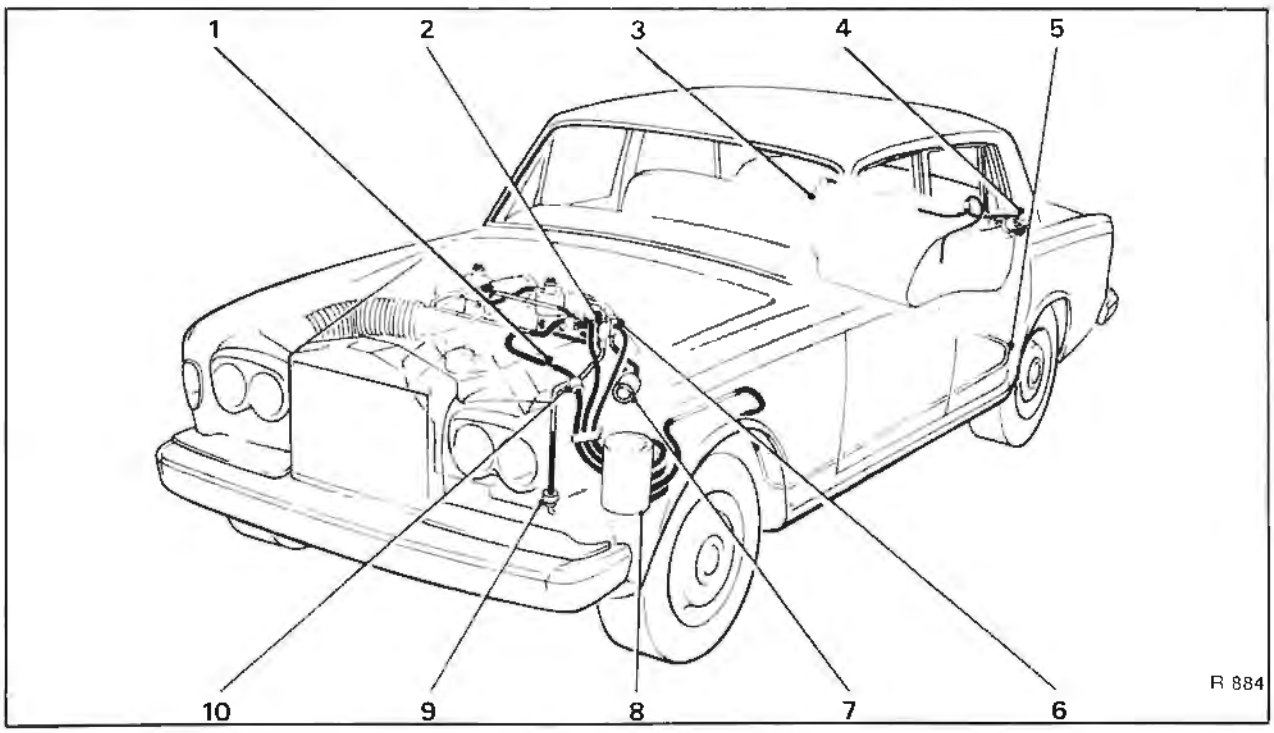

Fig. U14 Fuel evaporative emission control system

1 Purge line restrictor
2 Float chamber vent valve
3 Fuel tank
4 Fuel filler
5 Fuel vapour line
6 Weakening device
7 Weakening device filter
8 Evaporative loss control canister
9 Float chamber drain valve
10 Purge line filter

January 1979
T.S.D. 4200
(U.S.A. & Canada
1979 Model year)

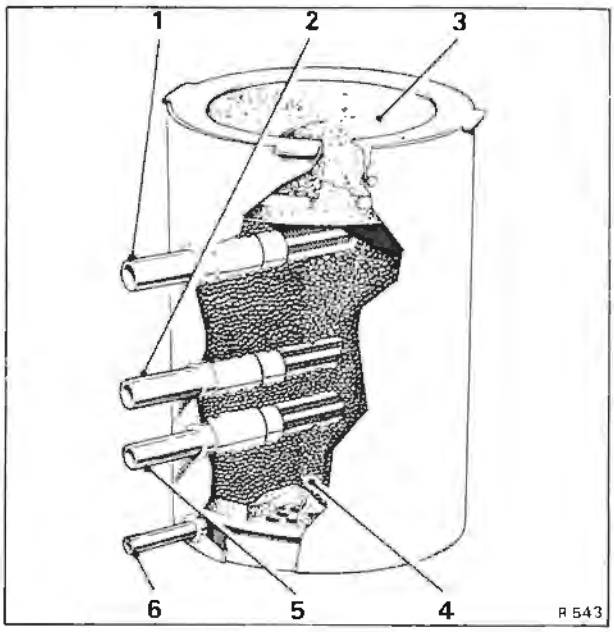

Fig. U15 Control canister
1 Weakening device connection
2 Float chamber vent connection
3 Polyurethane filter
4 Carbon
5 Fuel tank vent connection
6 Purge line connection

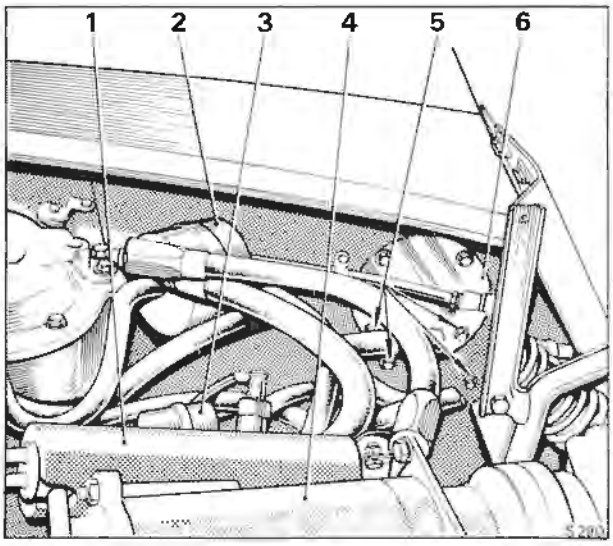

Fig. U16 Foam filter access cover, purge line filter and weakening device filter
1 Fuel cooler
2 Weakening device filter
3 Purge line filter
4 Refrigeration compressor
5 Canister securing setscrews
6 Foam filter access cover

For details of the servicing and maintenance requirements of the Fuel Evaporative Emission Control System refer to the Service Schedules Manual - T.S.D. 4117.

Control canister (see Figs. U14 and U15)

The evaporative emission control canister is situated under the left-hand front wing. It is a cylindrical container filled with activated carbon granules which absorb and retain fuel vapour. There are connections for the mixture weakening device vent, the fuel receiver vent, the fuel tank vent and the purge line. The top of the canister is open to atmosphere and contains a Polyurethene foam filter element.

When the engine is running, air is drawn from the atmosphere through the foam filter element and carbon granules to the lowest connection on the canister. The air, containing fuel vapour from the carbon granules then passes into the engine via the purge line.

Control canister - To remove

1. Remove the front left-hand road wheel as described in Chapter R.

Note
Left-hand is determined when viewed from the driver's seat.

2. Remove the front section of the underwing sheet by unscrewing the small screws situated around the outer edge of the sheet. Resistance may be experienced when the sheet is being freed, as it is sealed around the edge with Bostik Sealing Compound 771.
3. The canister will be clearly visible towards the front of the vehicle.
4. Using the special pliers (RH 8090), remove the steel retaining clips from the four hose connections to the canister. Label the hoses to facilitate identification and withdraw the four hoses from the canister.
5. Raise the bonnet and from inside the engine compartment locate the canister foam filter access cover (see Fig. U16).
6. Unscrew and remove the four setscrews indicated as securing setscrews in Figure U16. Before removing the final setscrew support the control canister.
7. Withdraw the canister from beneath the wing.

Control canister - To fit

Fit the canister by reversing the procedure described for removal, noting the following points.
1. Ensure that the rubber hoses are in a good condition and new hose retaining clips are fitted.
2. Ensure that the underwing sheet is sealed with Bostik Sealing Compound 771.

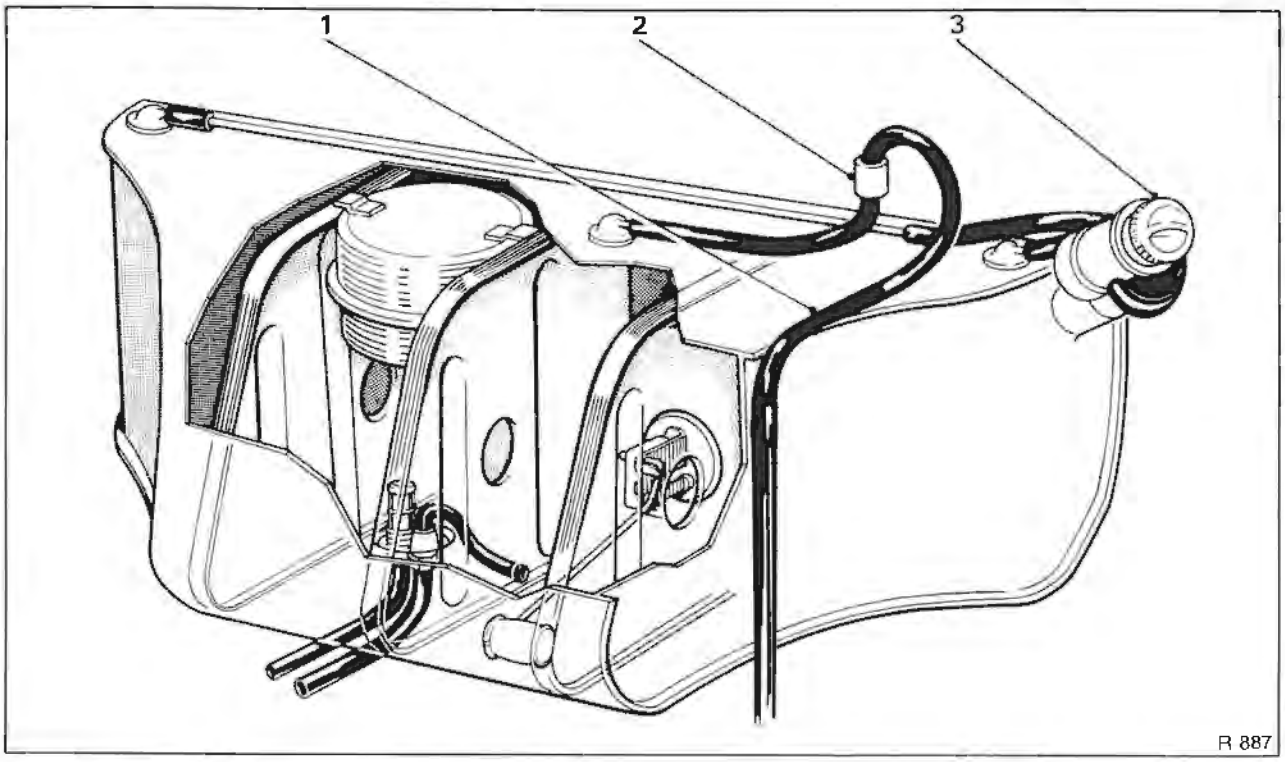

Fig. U17 Fuel tank
1 Fuel vapour line
2 Rollover valve
3 Fuel filler cap (incorporating combined pressure and vacuum relief valve)

Polyurethane foam filter element - To renew
It is not necessary to remove the canister from the car in order to extract the polyurethane foam filter element. A detachable cover is situated in the left-hand valance (see Fig. U16).
1. Unscrew the four screws retaining the access cover, lift off the cover and withdraw the filter element from the top of the canister.

When fitting a new element, ensure that it is correctly positioned inside the retaining rim of the cenister. Fit the access cover and tighten the setscrews.

Fuel tank (see Fig. U17)

The fuel tank is fitted at the forward end of the luggage compartment behind the carpet covered sealing panel.

The fuel tank is vented via two connections to the filler neck which allows adequate venting of the tank when it is being filled.

A separate vapour line from the fuel tank passes via a rollover valve (situated on the top of the fuel tank), under the floor on the left-hand side of the car to the evaporative loss control canister.

The rollover valve prevents fuel from entering the evaporative emission control canister during harsh manoeuvres or in the event of vehicle inversion. Fuel vapour passes freely through the valve.

In the event of a blockage in the vapour line to the evaporative loss control canister, a combined pressure and vacuum relief valve in the fuel filler cap prevents any excessive build-up of pressure due to fuel vapourisation or depression as the fuel is consumed.

An expansion tank situated within the main fuel tank inhibits complete filling and thereby provides fuel expansion volume to cope with extreme temperature conditions.

For all other details of the fuel tank refer to Chapter K.

Fuel evaporative emission control system - To leak check
Whenever the various pipes, hoses and components of the fuel evaporative emission control system are disturbed, the system should be checked for air leaks upon assembly.

To test the system proceed as follows.
1. Position the vehicle on a ramp and carry out the usual safety precautions (i.e. ensure that the gear range selector lever is in 'Park' position, the parking brake firmly applied, the engine switched off, etc.,). Raise the ramp.
2. Remove the left-hand horn assembly (left-hand is decided when standing under the vehicle, looking towards the front), see Chapter M.

Printed in England
© Rolls-Royce Motors Limited 1978
January 1979
T.S.D. 4200
(U.S.A. & Canada
1979 Model year)

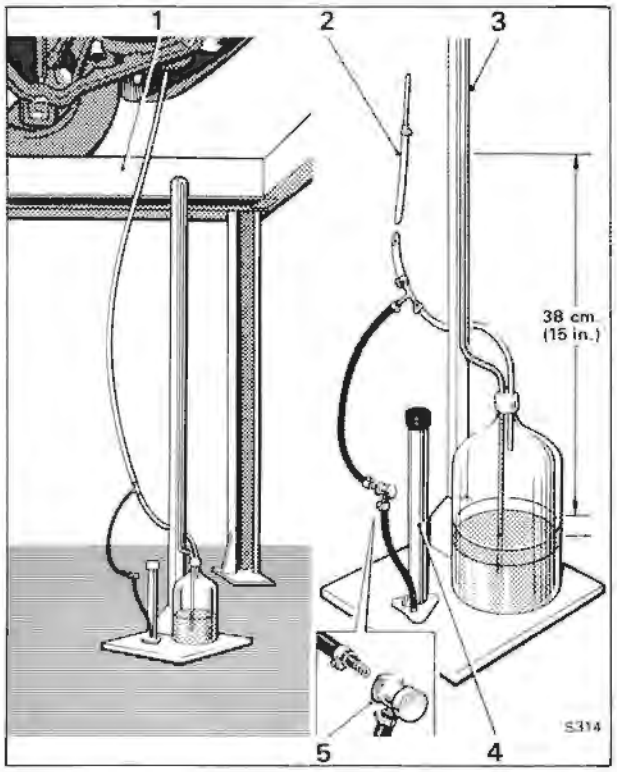

Fig. U18 Leak check test equipment
1 Ramp
2 Connection to fuel tank/canister hose
3 Test equipment
4 Pump
5 One-way pressure valve

3. Through the resultant gap between the front wing and wing sheet, locate the emission control canister and identify the hose connection from the fuel tank (second from the bottom).
4. Using the special pliers (RH 8090), remove the steel retaining clip from the fuel tank connection hose at the control canister.
5. The fuel tank hose should be detached from the canister and connected to the test equipment (see Fig. U18).
6. Apply air pressure to the fuel tank hose via the test equipment until a reading of 38 cm. (15 in.) H_2O is attained and close the pressure supply.
7. After 5 minutes again check the pressure reading, this should not have fallen by more than 12,7 mm. (0.5 in.).
8. If the pressure drop is more than 12,7 mm. (0.5 in.), progressively treat all joints in the system with soap solution to detect air leaks.
9. Rectify any air leaks and again leak check the system.
10. When the system is satisfactory, detach the test equipment and connect the hose to the control canister, secure with a new steel retaining clip.
11. Fit the left-hand horn assembly as described in Chapter M.

Purge line

The purge line consists of a rubber hose, passing from the lowest connection on the canister through the valance junction piece to the induction manifold connection on the opposite side of the engine (see Fig. U14). Incorporated into this hose is the purge line filter and restrictor.

When the engine is running, air drawn through the canister filter and carbon picks up the stored fuel vapours and passes them via the hoses, to the induction system at a point just below the choke housing. The restrictor in the line controls the flow rate at between 1,41 cu.m. per hr. and 1,98 cu.m. per hr. (50 cu.ft. per hr. and 70 cu.ft. per hr.) to maintain carburetter metering accuracy and the paper element line filter is fitted to prevent blockage of the restrictor.

Purge line filter

The purge line filter is situated on the left-hand valance just forward of the front road spring pot (see Fig. U16). The air filter assembly is a sealed unit and no attempt should be made to clean the element.

At the mileage intervals specified in the Service Schedules the purge line filter should be removed and a new assembly fitted as follows.

Purge line filter - To remove

1. Using the special pliers (RH 8090) remove the two steel retaining clips situated one on either side of the filter assembly.
2. Detach the inlet and outlet hoses.
3. Slacken the small setscrew that secures the clamp bracket around the filter assembly.
4. Swivel the clamp bracket to enable the filter assembly to be withdrawn.

Purge line filter - To fit

Fit the purge line filter by reversing the procedure given for removal, noting the following points.
1. Ensure that the filter assembly is fitted the correct way around; the word 'IN' moulded into the end of the casing should be towards the front of the vehicle.
2. Ensure that the rubber hoses are in a good condition and that new hose retaining clips are used.

Purge line restrictor

The purge line restrictor is situated in the purge line between the air filter and the induction manifold connection (see Fig. U14). The function of the restrictor is to maintain the air flow through the purge line within predetermined limits.

Purge line restrictor - To remove

1. Hold the restrictor firmly and slide the rubber hosing from both ends.

Printed in England
© Rolls-Royce Motors Limited 1978

Purge line restrictor - To fit

Fit the restrictor by reversing the procedure given for removal, noting the following point.

1. Ensure that the purge line restrictor is fitted into the line correctly. This can be determined by comparing the diameters of the restrictor ends with those of the rubber hoses.

Purge flow rate - To check

1. Disconnect the hose from the engine side of the purge line filter and insert a flowmeter assembly (RH 8725) into the line between the filter and the restrictor. The flowmeter is a rotameter type capable of measuring between 1,4 cu.m hr. and 2,0 cu.m/hr. (50 cu.ft/hr. and 70 cu.ft/hr.). The pressure drop across the meter must not exceed 5,08 cm.Hg. (2.0 in.Hg.).

2. Start and run the engine at 650 r.p.m., the reading on the flowmeter should be between 1,41 cu.m/hr. and 1,99 cu.m/hr. (50 cu.ft/hr. and 70 cu.ft/hr.).

3. If the flow is less than the minimum figure quoted in Operation 2, stop the engine and substitute the purge line restrictor with a straight piece of metal pipe having an internal diameter larger than 4,76 mm. (0.187 in.).

4. Start and run the engine at 650 r.p.m.; the reading on the flowmeter should be in excess of 1,99 cu.m/hr. (70 cu.ft/hr.).

5a. If the flowmeter reading is above 1,99 cu.m/hr. (70 cu.ft/hr.) fit a new purge line restrictor and repeat Operation 2.

b. If the flowmeter reading is below 1,99 cu.m/hr. (70 cu.ft/hr.) the cause could be as follows.

(i) An air leak in any of the vacuum hoses that connect to the induction manifold connection (vacuum manifold).

(ii) A blockage in the vacuum manifold or any of the connecting hoses.

Any leaks or blockages should be rectified; the restrictor should be fitted and Operation 2 repeated. If the flow rate is still incorrect fit a new restrictor and again, repeat Operation 2.

6. Remove the test equipment and connect the hose to the purge line filter.

Weakening device

The mixture weakening device (see Fig. U19) is fitted adjacent to 'B' bank carburetter and incorporates a fuel receiver.

For any given position of the fuel metering needle, the rate of the discharge from the carburetters is governed by the difference in air pressure existing over the fuel in the float chamber and that over the jet.

The weakening device is designed to reduce the air pressure (create a depression) in the float chamber at part throttle, thereby reducing the rate of discharge from the jet.

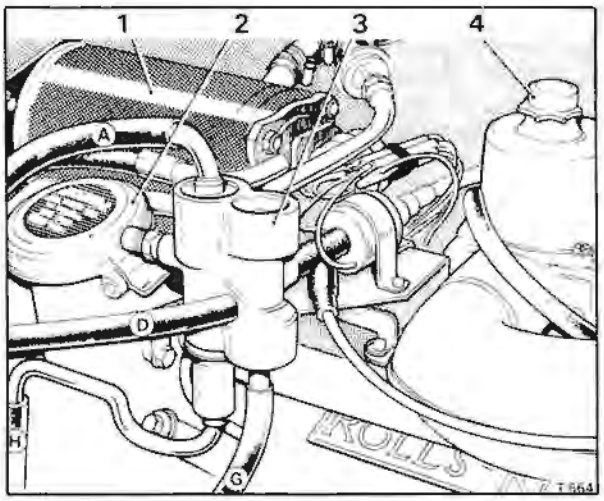

Fig. U19 Position of mixture weakening device

1 Refrigeration compressor
2 Engine oil filler
3 Mixture weakening device
4 'B' bank carburetter

The weakening device housing contains two chambers, (see Fig. U20), the venturi chamber, and the fuel receiver chamber, the two being interconnected by a passage and an adjustable venturi.

The venturi chamber is connected to a small drilling on the edge of the butterfly plates of both carburetters via the weakening device solenoid valve, with the throttle slightly open the drillings are subjected to manifold depression thus creating a depression in the venturi chamber which draws air from the weakening device air filter. This depression is also apparent in the fuel receiver chamber and subsequently in the carburetter float chambers.

The value of the depression is set by the position of the weakening device adjusting screw.

To obtain adequate float chamber venting to cope with hot soak conditions there is an additional vent from the fuel receiver. This incorporates a low pressure non-return valve to maintain float chamber depression under normal running conditions. In addition to this valve, a one-way valve is fitted into the venturi chamber to prevent any evaporating fuel being discharged to atmosphere.

A float chamber drain, also incorporating a low pressure non-return valve is mounted at the front of the engine adjacent to the oil filter, this valve is connected to the fuel receiver. Should flooding occur the head of fuel in the receiver is sufficient to open the drain valve thus preventing engine stalling if the float chamber needle valves stick.

Weakening device - To remove

1. Label all hoses connected to the weakening device assembly, this will facilitate assembly.

2. Disconnect all hoses to the weakening device.

January 1979
T.S.D. 4200
(U.S.A. & Canada
1979 Model year)

3. Unscrew and remove the two small setscrews that retain the weakening device to the solenoid platform; the two screws are situated just below the pipe/hose connections for the anti 'run-on' solenoid and weakening device cut-off solenoid.
4. Withdraw the weakening device.

Weakening device - To fit
Fit the weakening device by reversing the procedure given for removal, noting the following point.
1. Ensure that all hoses connecting to the assembly are in a good condition and that all connections are 'air tight'.

Weakening device - To dismantle (see Fig. U20)
1. Remove the weakening device from the vehicle.
2. Remove the small screw that secures the fuel receiver assembly into the base of the weakening device, withdraw the assembly.
3. Unscrew the weakening device signal cap, collect the cap fibre washer. Unscrew the signal line adapter from the casting and withdraw the aluminium washer from the adapter.
4. Remove the circlip from the top of the fuel receiver chamber, withdraw the float chamber vent pipe (slight resistance may be felt due to the rubber sealing ring). With a soft drift (e.g. wooden pencil), push the float chamber vent valve out of the weakening device assembly (the drift is required because the rubber sealing ring fitted around the vent valve will cause a small resistance)
5. Remove the circlip from the base of the venturi chamber, withdraw the air intake pipe containing a one-way valve (slight resistance may be felt due to the rubber sealing ring).
6. Remove the anti-tamper cover from the top of the venturi chamber, unscrew the lock-nut and using a screwdriver unscrew the adjusting screw.

Weakening device - To assemble
To assemble the weakening device, reverse the procedure given for removal, noting the following.
1. Ensure that all components are clean before assembly.
2. Ensure that the rubber sealing rings are in a good condition and lightly smeared with the minimum amount of grease. Ensure that no grease is applied to the valves otherwise a malfunction may occur due to the grease making the valves stick.
3. After assembly, the operator should check that he can blow but not suck on the metal pipes, one on top of the fuel receiver chamber and the other at the bottom of the venturi chamber.

Weakening device signal strength - To check
The float chamber depression should be checked as follows.
1. Start and run the engine until normal setting conditions are attained (i.e. engine cooling system thermostat opened, air conditioning unit switched off, and the automatic choke is off).
2. Stop the engine.
3. Connect an electric impulse tachometer to the engine in accordance with the manufacturer's instructions.
4. Isolate the E.G.R. valve(s) from the weakening system by disconnecting the E.G.R. signal hose from the 'tee' piece located between the weakening system cut-off solenoid and the weakening device. Blank off the 'tee' piece connection.
5. Unscrew and remove the weakening device signal cap and connect a 0 to 15,24 cm. (0 to 6 in.) water manometer to the weakening device adapter.
6. Start and run the engine at 2 000 r.p.m. in 'Park' until a steady manometer reading is obtained, this should be 5,08 cm. (2,0 in.) of water depression.

A low or zero reading may be caused by
a. A blockage in the weakening device venturi to the weakening device cut-off solenoid.
b. A blockage or restriction in the signal pipe(s).
c. An air leak in the hoses or pipes from the float chambers to the emission control canister.
d. Faulty float chamber vent valve or drain valve.
e. Low engine air intake temperature [below 14° C (57 °F.)] a faulty weakening device solenoid or weakening device switch.

A high reading may be caused by
a. An obstruction in the weakening device bleed orifice (weakening device signal strength adjusting screw).
b. Obstructed weakening device air filter or evaporative loss control canister.
c. Incorrect connection or blockage in the weakening device to either the valance connection or the evaporative loss control canister.
d. Weakening device air intake valve sticking closed.
e. Obstructed weakening device air filter hose.
f. Incorrect operation of anti 'run-on' solenoid.
7. If the float chamber depression is still incorrect after checking through the possible causes in Operation 6, set the weakening device signal strength (float chamber depression) by unlocking and turning the adjusting screw (see Fig. U20) until the correct manometer reading is obtained. Turning the adjusting screw clockwise increases the depression.
8. Remove the blank from the weakening system 'tee' piece and connect the E.G.R. hose.
9. Raise the engine speed slowly noting both the manometer and tachometer readings. The maximum steady manometer reading should be obtained between 1 200 r.p.m. and 1 500 r.p.m.
10. Allow the engine speed to return to the idle setting (650 r.p.m.) and check the float chamber depression reading on the manometer.
If the float chamber depression at idle speed is above 10,16 mm. H_2O (0.4 in. H_2O) check the ignition timing at idle as this condition may result

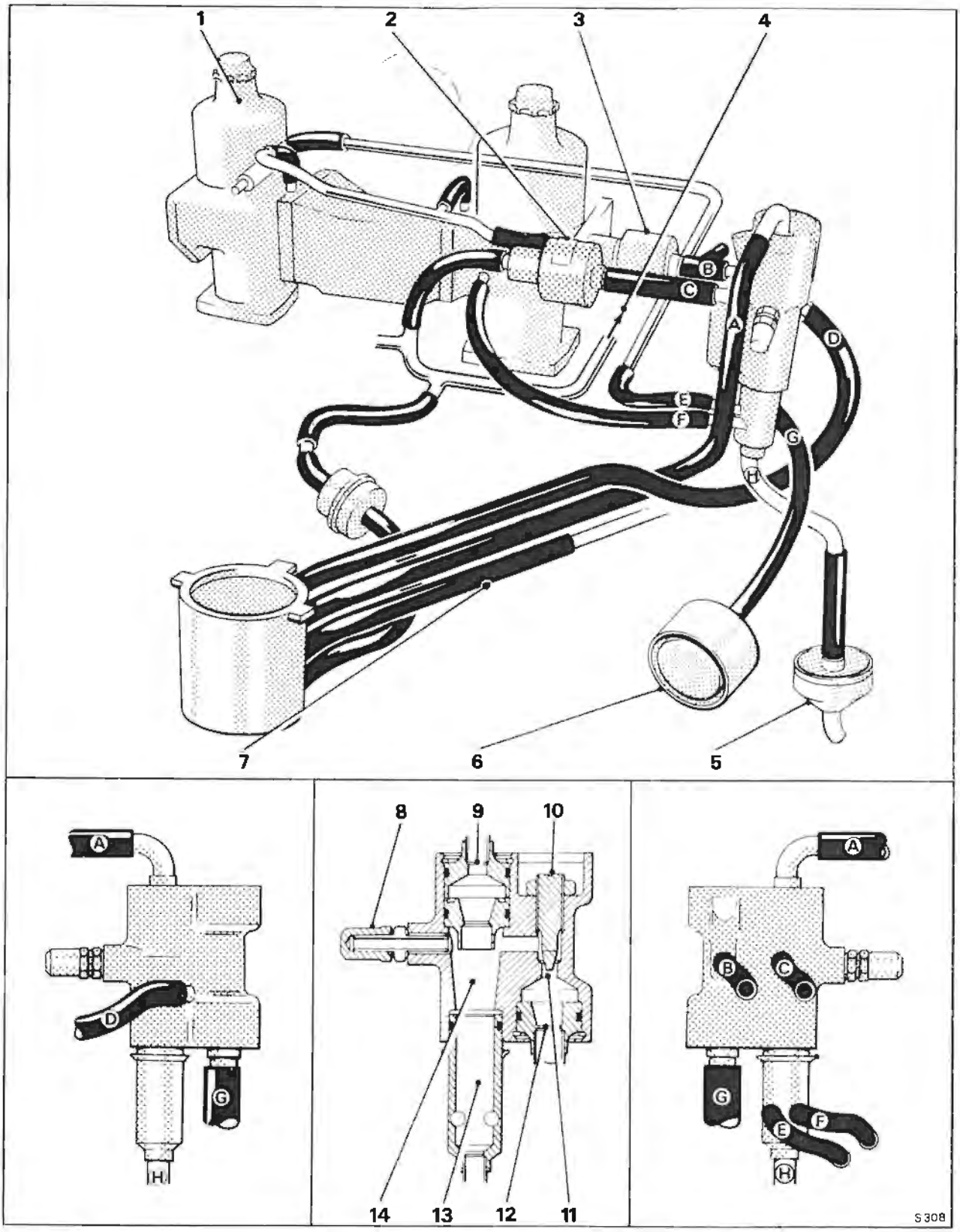

Fig. U20 Mixture weakening device

1 'A' bank carburetter
2 Anti 'run-on' solenoid
3 Weakening and E.G.R. systems cut-off solenoid
4 Induction manifold connection
5 Float chamber drain valve
6 Weakening system air filter
7 Vent from fuel tank
8 Weakening device signal cap
9 Float chamber vent valve
10 Adjusting screw
11 Venturi chamber
12 Air intake valve
13 Fuel receiver
14 Fuel receiver chamber

Printed in England
© Rolls-Royce Motors Limited 1978
January 1979
T.S.D. 4200
(U.S.A. & Canada
1979 Model year)

in unsatisfactory driveability.
11. Fit the tamperproof cover into the top of the venturi chamber.

Weakening device air filter - To remove
The air filter container is mounted on the left-hand valance just forward of the road spring pot (see Fig. U16).

This is a sealed unit and no attempt should be made to clean the element.
1. To remove the air filter assembly, detach the hose and unscrew the worm drive clip situated around the assembly.
2. Withdraw the assembly.

Weakening device air filter - To fit
Fit the air filter container by reversing the procedure given for removal.

Section U4

Crankcase emission control system

Crankcase emissions are controlled by a recirculatory closed breather system.

An insulated draught tube connects the crankcase via the oil filler which is fitted with a sealed cap, to the choke housing upstream of both the choke butterfly and the carburetters. A fleme trap capsule containing three wire mesh discs is fitted in a housing at the crankcase end of the draught tube. Engine emission (blow-by) is drawn into the induction system via the draught tube, due to the depression in the choke housing.

1. The flame trap fitted to the breather pipe should be cleaned in the following manner, at the specified mileage.
2. Unscrew the setscrew securing the breather pipe connection to the oil filler pedestal; withdraw the connection from the pedestal (slight resistance may be felt due to the rubber 'O' ring connections).
3. Withdraw the connection from the pipe flange and collect the restrictor (if fitted).
4. Wash the flame trap assembly in clean fuel, then dry with a high pressure air line. The flame trap assembly consists of 3 gauzes crimped together as shown in Figure U21.
5. To clean the adapter fitted to the choke housing, remove the single setscrew from the breather pipe end connection and detach the pipe.
6. Clean the adapter fitted to the choke housing and ensure that the holes in the adapter are clear.
7. Assembly of the flame trap and breather pipe is in the reverse order, ensuring that the 'O' rings are in good condition.

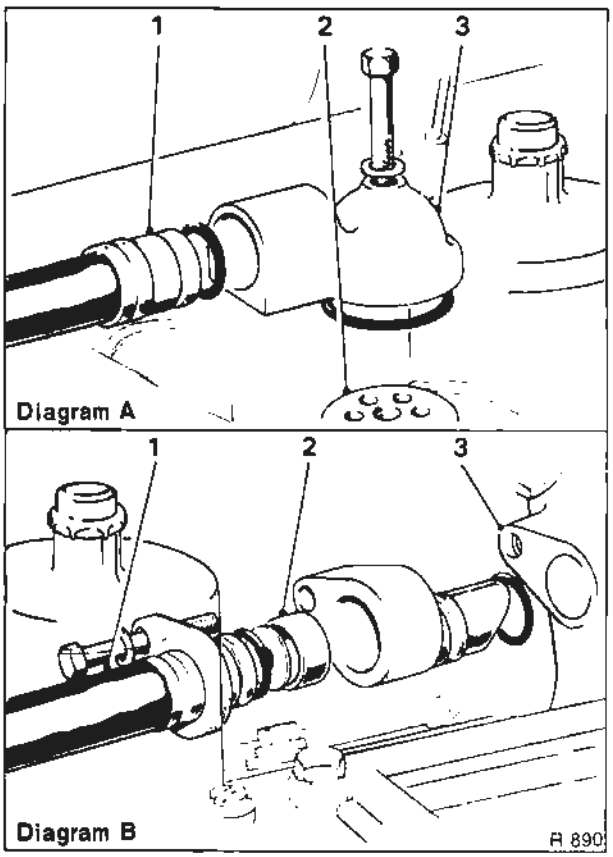

Fig. U21 Crankcase breather pipe connections

Diagram A	Diagram B
1 Breather tube	1 Breather tube
2 Choke housing	2 Flame trap
3 Breatner connection	3 Oil filler housing

Printed in England
© Rolls-Royce Motors Limited 1978

Printed in England
© Rolls-Royce Motors Limited 1978
January 1979
T.S.D. 4200
(U.S.A. & Canada
1979 Model year)

Section U5

Carburetters and Automatic choke system

The Carburetter and Automatic choke system can be seen illustrated in Figure U22 and comprises the following main components.

Automatic choke

'Fast-idle'
Stove pipe
(For the remainder of the Automatic choke system refer to Chapter K).

Carburetters (see Fig. U24)

Bi-metal jet lever
Carburetter fuel filter
Carburetter idle airflow balance
Float
Float chamber
Float needle
Jet assembly
Jet needle
Overrun valve
Piston
Piston damper
Piston damper retainer (Piston ball race clip)
Suction chamber
Tamperproof caps
Throttle disc
Throttle linkage
Viscosity compensator

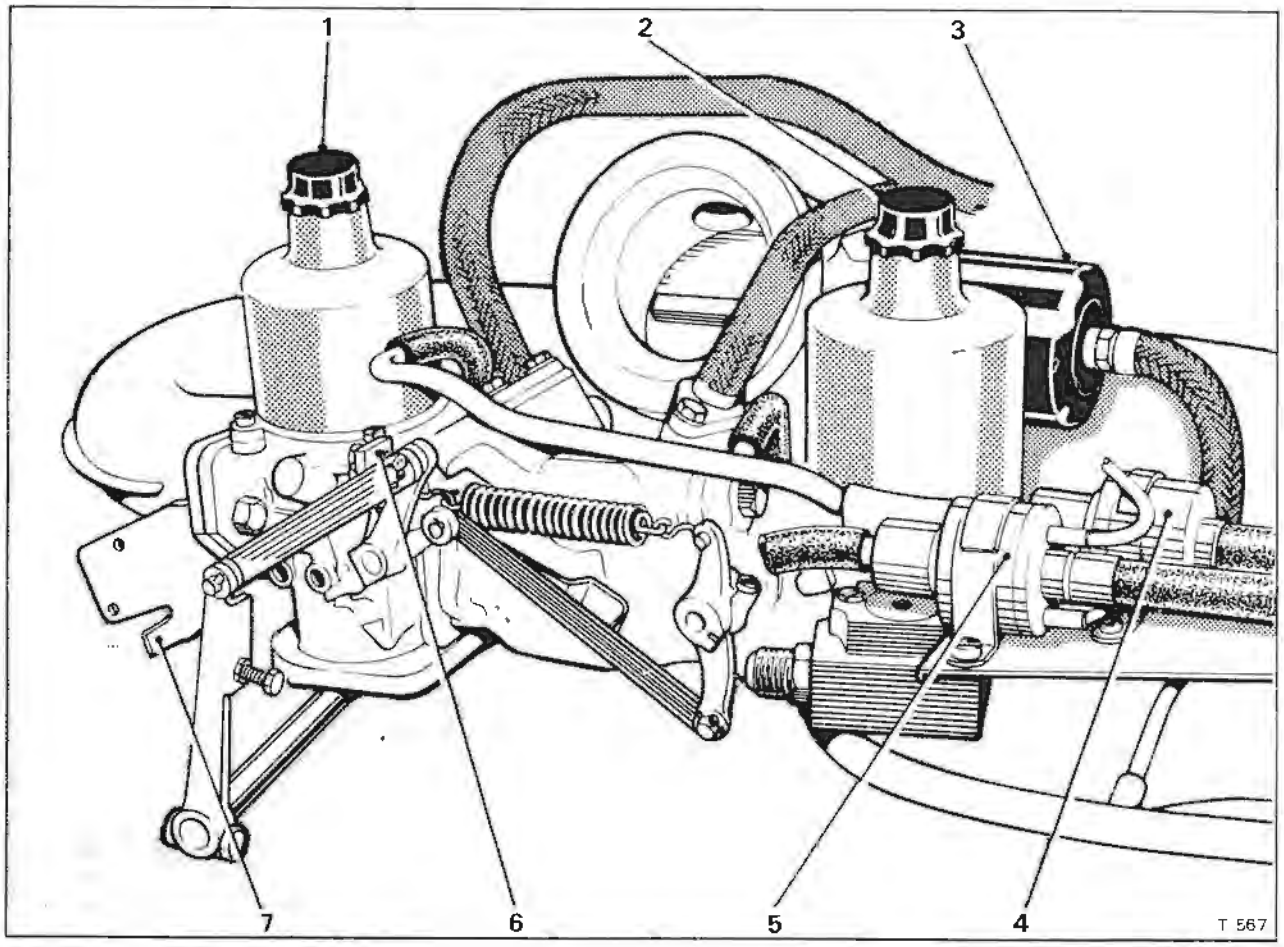

Fig. U22 Carburetters and linkage

1 'A' bank carburetter
2 'B' bank carburetter
3 Choke bi-metal housing
4 Weakening and E.G.R. systems cut-off solenoid
5 Anti 'run-on' solenoid
6 Idle speed adjusting screw

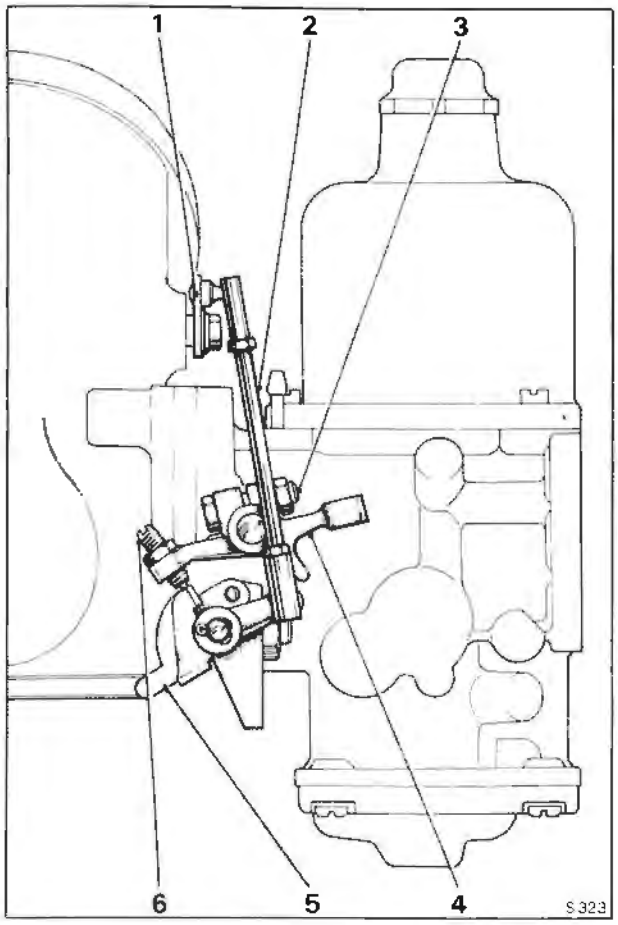

Fig. U23 Fast-idle mechanism
1 Control rod lever
2 Butterfly rod
3 Lever clamp bolt
4 'Fast-idle' lever
5 Cam
6 Adjusting screw

Temperature controlled air intake

Air cleaner/silencer
Air blend valve
Cold air intake
Hot air scoop
Manifold vacuum hose
Resonator
Temperature sensor

Weakening device

(Refer to Section U3).

Automatic choke

All details for the Automatic choke system are given in Chapter K, except for the checking and setting procedures of the following.

'Fast-idle' - To set

1. Ensure that the usual safety precautions are carried out (i.e. parking brake firmly applied, gear range selector lever in 'Park' etc.) and connect an impulse tachometer in accordance with the manufacturer's instructions.
2. Disconnect the E.G.R. vacuum signal at the pipe from the solenoid 'Y' piece to the E.G.R. valve and blank the 'Y' piece connection.
3. Remove the pressure tapping cap from the weakening device (see Fig. U20).
4. Open the throttles and close the choke butterfly against the bi-metal tension using control rod lever (item 1 - Fig. U23) until the adjusting screw (item 6 - Fig. U23) is resting on the tip of the fast-idle cam. At this point an extra load will be felt due to the action of the extended fast-idle plunger ceasing.
5. Start the engine, if the speed is outside a range of 850 r.p.m. to 900 r.p.m. stop the engine, open the throttles to gain access to the adjusting screw and turn the screw approximately ⅛ turn for each 20 r.p.m. required. Tighten the lock-nut.
6. Start the engine and again check the fast-idle speed.
7. When the engine speed has been adjusted to within the prescribed limits open the throttles to release the fast-idle mechanism.
8. Stop the engine, disconnect the tachometer, remove the blank from the 'Y' piece connection at the cut-off solenoid and fit the E.G.R. signal pipe to the 'Y' piece connection. Fit the pressure tapping cap to the weakening device.

Choke stove pipe - To flow check

1. Ensure that the usual safety precautions are carried out (i.e. parking brake firmly applied, gear range selector lever in 'Park' etc.) and connect an impulse tachometer in accordance with the manufacturer's instructions.
2. Start and run the engine until normal operating temperature is attained. Stop the engine.
3. Disconnect the stove pipe union at the intake elbow (see Fig. U37) and connect a flowmeter to the pipe via a connector (RH 8945). The flowmeter must be a rotameter type capable of measuring 2,9 cu.m/hr. (100 cu.ft/hr.).
4. Start and run the engine at idle speed (650 r.p.m.); observe the flowmeter, a correct reading is between 1,41 cu.m/hr. and 1,55 cu.m/hr. (50 cu.ft hr. and 55 cu.ft hr.).
5. If the flow is less than 1,41 cu.m/hr. (50 cu.ft/hr.) check the choke stove pipe unions for leaks.
6. If the flow is in excess of 1,55 cu.m/hr. (55 cu.ft/hr.), fit a new restrictor in the choke bi-metal housing (see Chapter K).

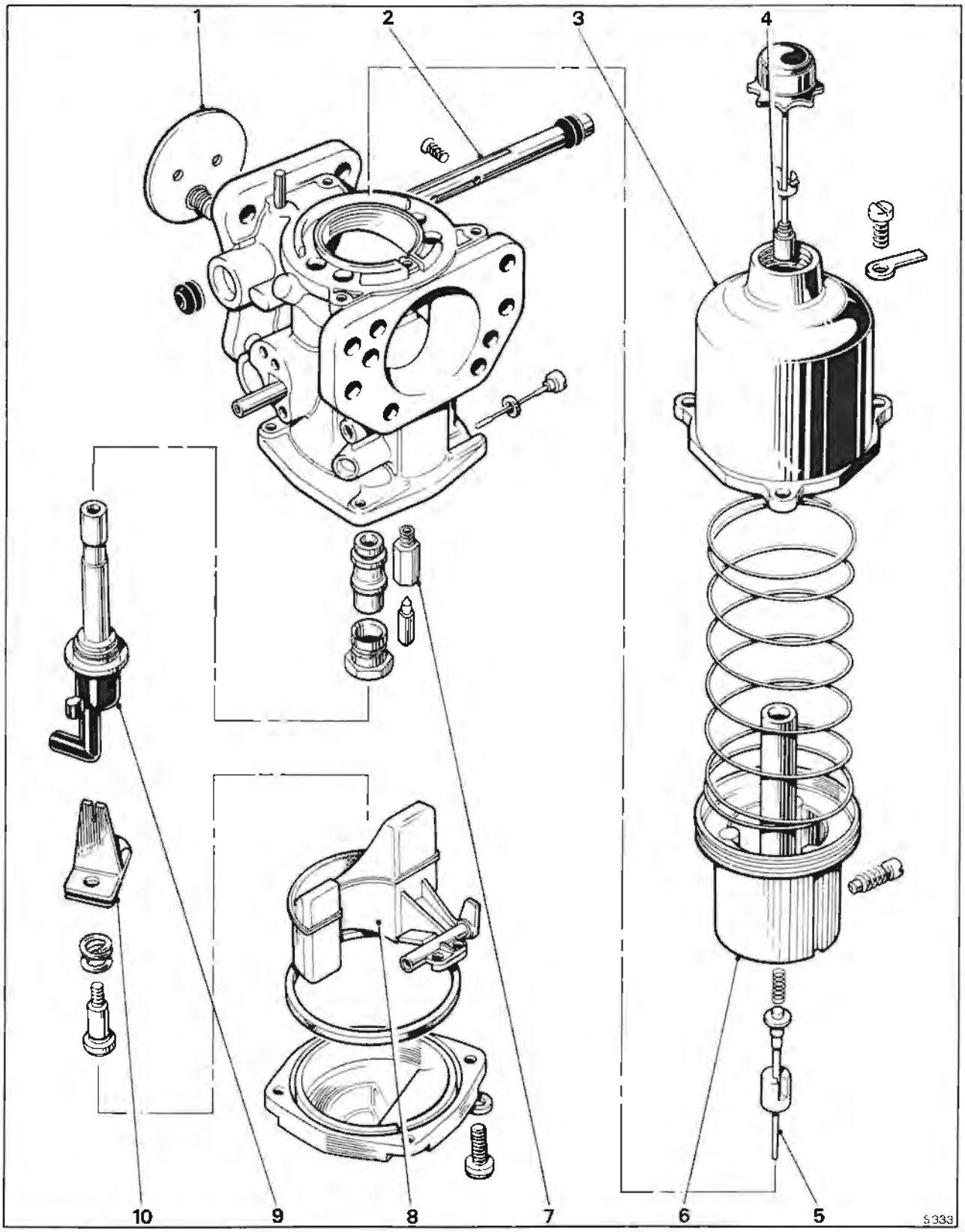

Fig. U24 SU HIF7 carburetter

1 Throttle disc with overrun valve
2 Throttle spindle
3 Suction chamber
4 Piston damper
5 Jet needle
6 Piston
7 Float needle valve assembly
8 Float
9 Jet assembly
10 Bi-metal jet lever

Printed in England
© Rolls-Royce Motors Limited 1978

Carburetters

Two S.U. HIF7 (Horizontal Integral Float Chamber) carburetters with 4,76 cm. (1.875 in.) choke bores (see Fig. U24) are fitted to the engine on a central 'tee' piece which is mounted over an eight branch induction manifold.

This type of carburetter automatically adjusts both its choke and jet area to meet the demand of the engine which is dependent on engine speed and loading. As air is drawn through the carburetter, the piston acting as an obstruction will cause a depression to be formed in the area between the throttle and the piston. This depression is communicated by means of transfer holes in the base of the piston to the area above the piston, causing an upward force to be imposed on the piston. The piston will rise in response to this force relieving the depression in the area between the piston and the throttle as it does so until a point is reached where the force acting on the piston is balanced by the weight of the piston and the load exerted by the piston spring.

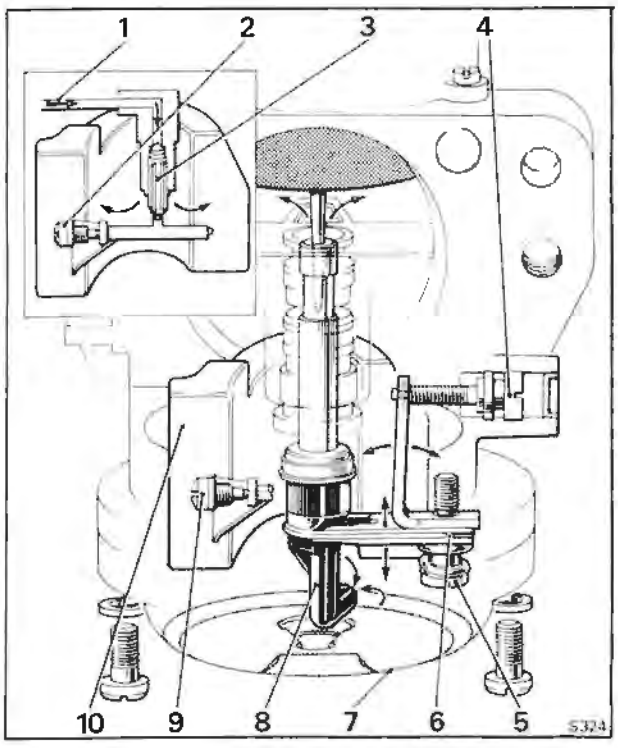

Fig. U25 Float chamber layout

1 Fuel inlet
2 Float fulcrum screw
3 Needle valve
4 Jet adjusting screw
5 Bi-metal pivot screw
6 Bi-metal assembly
7 Bottom cover-plate
8 Jet head
9 Float fulcrum screw
10 Concentric float

A spring-loaded jet needle is fitted to the carburetters, which is biased downstream and operates in a 2,54 mm. (0.10 in.) diameter main jet; this jet does not require centralising.

Float chamber (see Fig. U25)

The float chamber is incorporated in the main body casting; access to the chamber is obtained by removing the bottom cover-plate (item 7). The moulded float (item 10) is shaped so that it surrounds the jet tube and is pivoted along a line parallel to the inlet flange. The float is retained by a spindle (items 2 and 9) which screws into the body casting.

Entry of the fuel into the float chamber is via a brass tube (item 1) in the side of the carburetter body to a needle valve assembly (item 3).

The jet is pressed into the top of an aluminium tube which is in turn pressed into a plastic moulding (item 8). This hollow moulding known as the jet head is open at its lower end allowing fuel to enter the jet tube.

Mixture adjustment (see Fig. U25)

The jet tube of the HIF type carburetter is moved in the vertical plane to provide mixture adjustment.

The jet adjustment assembly is comprised of a right-angled adjusting lever of unequal length arms riveted to a bi-metal blade (item 6).

The blade is cut out to accept the jet head (item 8) and the shape of the jet head is formed so that any movement of the bi-metal blade is transmitted to the jet head, moving it in the vertical plane.

The right-angled adjusting lever and bi-metal blade (item 6) are attached to the body casting by a spring-loaded retaining screw (item 5) positioned in the short arm of the lever. This attachment allows the adjusting lever to be pivoted at the outer edge of its short arm and is loaded by the spring towards the jet adjusting screw (item 4).

The jet adjusting screw is located at the outer end of the long arm of the adjusting lever; screwing the adjusting screw inward will lower the jet, enriching the mixture and unscrewing the adjusting screw will allow the spring to return the lever together with the jet, weakening the mixture.

After the mixture has been set the jet adjustment can be sealed by fitting a plug into the jet adjusting screw recess of the carburetter body.

HIF7 carburetters are set and balanced by accurate flow measuring techniques during manufacture and therefore, adjustment of the mixture screws should not be necessary.

Fuel temperature compensation (Viscosity compensator) (see Fig. U25)

This device alters the jet position in relation to the metering needle to compensate for changes in fuel viscosity which take place with changes in fuel temperature.

When the fuel temperature rises, the viscosity is lowered, and in an uncompensated assembly this would allow more fuel to flow for a given jet/needle relationship.

In the HIF jet assembly the jet head is attached to a bi-metal blade (item 6). This bi-metal is immersed in the fuel in the float chamber and will move in the vertical plane in response to changes in fuel temperature. The jet will be raised to a weaker position on the jet needle when the fuel temperature rises and will be lowered to a richer position when the temperature falls.

From this it will be seen that once the jet position has been selected by adjusting the mixture screw, alterations of fuel temperature will bring about slight alterations in jet position to compensate for the change in fuel viscosity.

The effect of this device is that drivability is improved over wide ranges of temperature, and that exhaust emissions can be kept within closer limits during cold starting and the warm-up period. Temperature compensation also allows carburetters to have the mixture setting pre-set and sealed before the car is delivered.

Overrun valves (see Fig. U26)

During overrun (i.e. when decelerating with the throttles closed), insufficient mixture is supplied to the engine to maintain satisfactory combustion. The overrun valves alleviate this condition by allowing some mixture to pass through the throttle plates (butterflies) at high inlet manifold depressions.

An overrun valve is fitted into the throttle plate of each carburetter.

An overrun valve consists of a small disc retained in each throttle plate by a spring loaded plunger. Under normal conditions the disc is seated against the throttle plate. When the throttle is suddenly closed, the increased inlet manifold depression lifts the disc from its seating and allows a metered quantity of air/fuel mixture to pass through the throttle plate.

The action of the overrun valves maintains satisfactory combustion on overrun thus reducing hydrocarbon emissions and controlling catalyst temperatures.

After the sudden closure of the throttles and as soon as the manifold depression falls, the overrun valve disc returns to its seat on the throttle plate.

Spring-loaded jet needle (see Fig. U27)

The jet needle fitted to each carburetter is biased towards a predetermined position in the jet orifice by means of a spring-loaded fixing.

The shoulder of the needle abuts a protrusion formed on the needle guide. Under the pressure of a spring the needle is held permanently in one position relative to the air flow. As the needle is retained in a predetermined position no jet centring is required and a non-centreable jet bearing is fitted. To ensure correct fitting the needle guide carries an etched alignment mark which should be positioned mid-way between the two cut-outs in the piston.

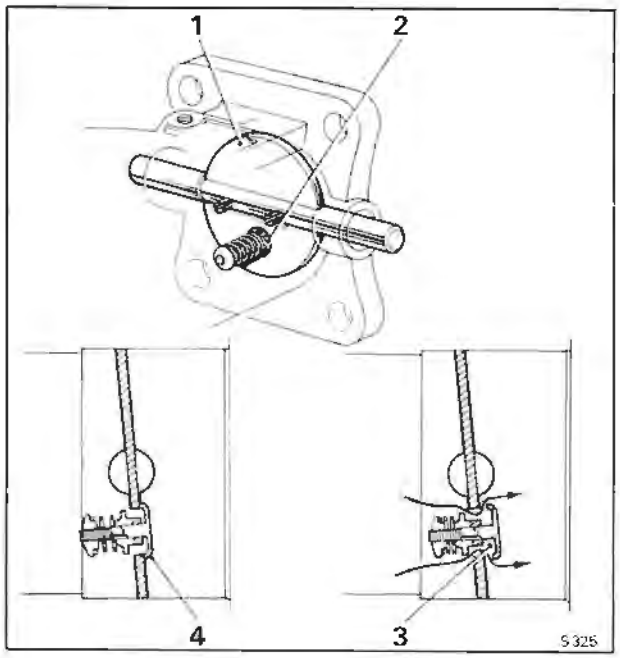

Fig. U26 Overrun valve
1 Throttle butterfly disc
2 Overrun valve
3 Overrun valve open
4 Overrun valve closed

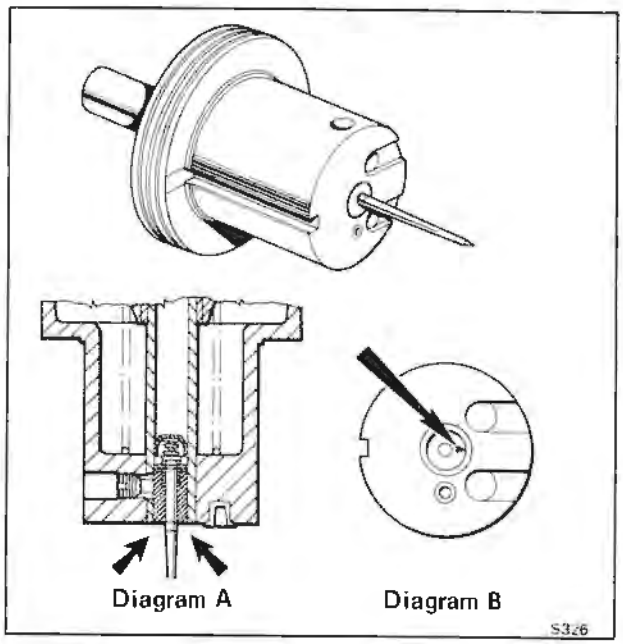

Fig. U27 Spring-loaded jet needle
Diagram A
Needle guide height setting
Diagram B
Needle guide alignment setting

Printed in England
© Rolls-Royce Motors Limited 1978
January 1979
T.S.D. 4200
(U.S.A. & Canada 1979 Model year)

Carburetter fuel filter
A filter element is fitted into the fuel filter housing attached to the side of each carburetter. At the intervals specified in the Service Schedules these two filter elements should be discarded and new ones fitted as described in Chapter K.

Carburetters and air horns assembly - To remove
Before commencing to remove the carburetters observe the following points.
1. When disconnecting the various hoses, pipes and wiring connections ensure that they are suitably labelled to assist identification when assembling.
2. Ensure that all open ends of pipes, hoses, etc., are suitably blanked off to prevent the ingress of dirt, etc.
3. Ensure that the usual safety precautions are carried out (i.e. parking brake firmly applied, gear range selector lever in Park, battery disconnected, etc.).

To remove the carburetters and air horn assembly proceed as follows.
From 'A' bank side
1. Remove the air intake elbow casting (refer to Air intake - To remove in Chapter K).
2. Disconnect the fuel feed and recirculation pipes adjacent to 'A' bank carburetter.
3. Withdraw the 'Lucar' electrical connections from the speed control unit. Disconnect the chain link from the throttle linkage to the speed control unit. Withdraw the vacuum hose from the speed control unit. Unscrew and remove the 'steady' bolt from the speed control bracket.
4. Remove the split pin, washer and clevis pin from the throttle linkage just forward of 'A' bank carburetter.

From 'B' bank side
5. Disconnect the E.G.R. feed pipe upper joint (refer to E.G.R. feed pipe - To remove, Section U2).
6. Unscrew the union on the choke stove pipe at the bi-metal housing.
7. Unscrew the fuel feed pipe union at 'B' bank carburetter filter housing.
8. Remove the crankcase emission control system pipe from the choke butterfly housing; withdraw the housing from the end of the pipe.
9. Disconnect the electrical cables to the choke solenoid at the 'snap connector' joints, adjacent to the butterfly housing.
10. Disconnect the 'Lucar' electrical connections to the anti'run-on'solenoid and Weakening and E.G.R. cut-off solenoid.
11. Detach the following hoses from the weakening device.
a. the hose from the float chamber vent valve
b. the hose from the fuel receiver
c. the hose to the air filter
d. the hose from the venturi chamber

These hoses are labelled A, H, G and D in Figure U4.
12. Disconnect the purge line at the restrictor.
13. Unscrew the 7/16 in. A/F nut from the dipstick bracket; collect the washer.
14. Unscrew the ½ in. A/F setscrew from the centre of the carburetter 'tee' piece; withdraw the setscrew and washer.
15. Carefully withdraw the carburetters and air horn assembly, ensuring that no pipes, hoses or electrical items are still connected.

Carburetters and air horns assembly - To fit
Fit the carburetters by reversing the procedure given for their removal, noting the following points.
1. Ensure that all joint faces are clean.
2. Fit new gaskets.

Carburetters - To remove
Remove the carburetters and air horn assembly from the car (refer to Carburetters and air horn assembly - To remove) and then, remove the carburetters from the air horns assembly as follows.

'A' bank carburetter
1. Unscrew the two ½ in A/F nuts securing the air horn to 'A' bank carburetter.
2. Withdraw the bolts, collect the washers and the full throttle stop mounting bracket.
3. Move the air horn flange upwards away from the carburetter.
4. Unscrew the union from the fuel filter.
5. Detach the vacuum supply hose from on top of the carburetter body adjacent to the carburetter and 'tee' piece flange.
6. Detach the hose from the side of the carburetter that connects to the fuel receiver in the weakening device.
7. Completely remove the two pinch bolts securing the throttle levers to the 'A' and 'B' bank carburetter butterfly spindles, remove the levers.
8. Unscrew the nut and withdraw the pinch bolt securing the 'fast-idle' lever to the carburetter spindle; withdraw the lever.
9. Unscrew the four half-nuts that retain the carburetter to the 'tee' piece flange; collect the washers.
10. Withdraw the carburetter and collect the gasket.

'B' bank carburetter
1. With a screwdriver, unscrew and remove the two screws securing the solenoid platform in position adjacent to 'B' bank carburetter. One screw is located on the air horn and has a nut underneath, and the other screw is situated in the filter housing.
2. Unscrew the ½ in. A/F nuts from the bolts that retain the air horn to the carburetter flange; withdraw the bolts and collect the washers. Move the

solenoid platform away from the carburetter.
3. Detach the hose from the side of the carburetter to the fuel receiver in the weakening device.
4. Carefully ease the air horn upwards away from the carburetter.
5. Completely remove the two pinch bolts securing the throttle levers to the 'A' and 'B' bank carburetter butterfly spindles,remove the levers.
6. Detach the vacuum supply hose from on top of the carburetter body adjacent to the carburetter and 'tee' piece flange.
7. Unscrew the remaining union from the fuel filter housing.
8. Unscrew the four half-nuts that retain the carburetter to the 'tee' piece flange; collect the washers.
9. Withdraw the carburetter and collect the gasket.

Dismantling of the components within the carburetters is not recommended as all carburetters are set and balanced by accurate flow measuring techniques during manufacture.

In certain isolated instances however, it maybe necessary to dismantle the carburetters and under these conditions the following procedure should be carefully followed.

Carburetter - To dismantle
Upper half (see Fig. U28)
1. Thoroughly clean the outside of the carburetter.
2. Unscrew the suction chamber retaining screws and remove the identity tag.
3. Lift the chamber assembly vertically from the body without tilting it.
4. Hold the piston firmly and pull the suction chamber, taking care not to bend the damper rod, until the damper retainer is freed from the piston rod. Unscrew and remove the damper.
5. Remove the piston spring, lift out the piston assembly and empty the oil from the piston rod.
6. Note the position of the needle guide etch mark in relation to the piston transfer holes for correct reassembly and unscrew the needle guide locking screw.
7. Withdraw the needle, guide and spring.

Lower half (see Fig. U29)
8. Mark the bottom cover-plate and body to ensure correct reassembly, unscrew the retaining screws and remove the cover complete with the sealing ring.
9. Remove the jet adjusting screw complete with 'O' ring.
10. Remove the jet adjusting lever retaining screw and spring.
11. Withdraw the jet complete with adjusting lever and disengage the lever.
12. Remove the float pivot spindle and aluminium washer.
13. Withdraw the float.

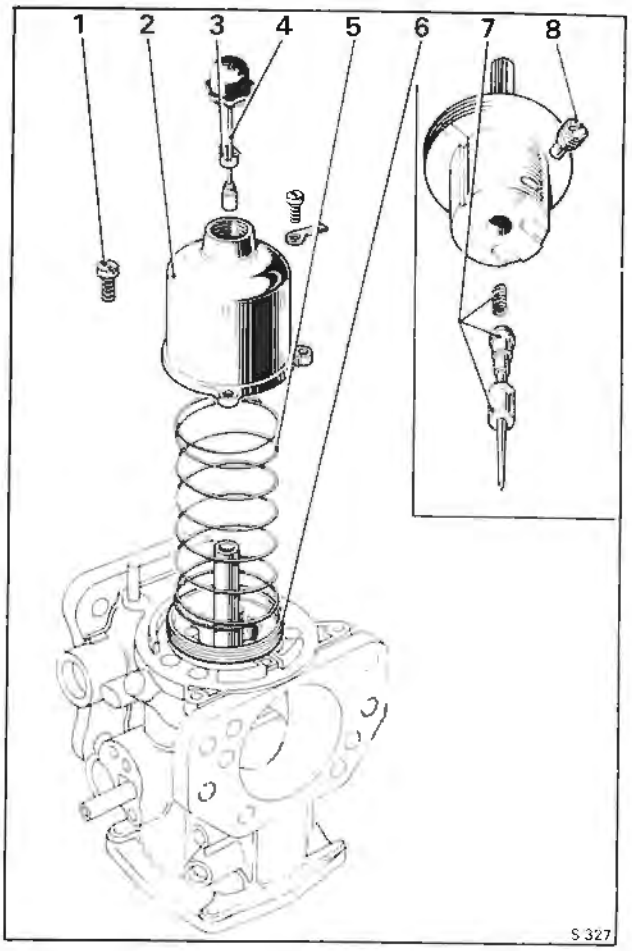

Fig. U28 Dismantling a carburetter (Upper half)
1 Suction chamber retaining screw
2 Suction chamber
3 Damper retainer (Piston ball race clip)
4 Damper rod
5 Spring
6 Piston
7 Spring-loaded needle assembly
8 Needle guide locking screw

14. Remove the needle valve and unscrew the valve seat.
15. Unscrew the jet bearing locking nut and withdraw the bearing complete with fibre washer.

Throttle disc assembly (see Fig. U30)
16. Remove the throttle disc retaining screws.
17. Close the throttle and mark the position of the throttle disc in relation to the carburetter flange. **Do not mark the disc in the vicinity of the overrun valve.** Open the throttle and carefully withdraw the disc from the throttle spindle taking care not to damage the overrun valve.
18. Withdraw the throttle spindle and remove the seals, noting the way it is fitted in relation to the carburetter body to ensure correct reassembly.

Printed in England
© Rolls-Royce Motors Limited 1978
January 1979
T.S.D. 4200
(U.S.A. & Canada 1979 Model year)

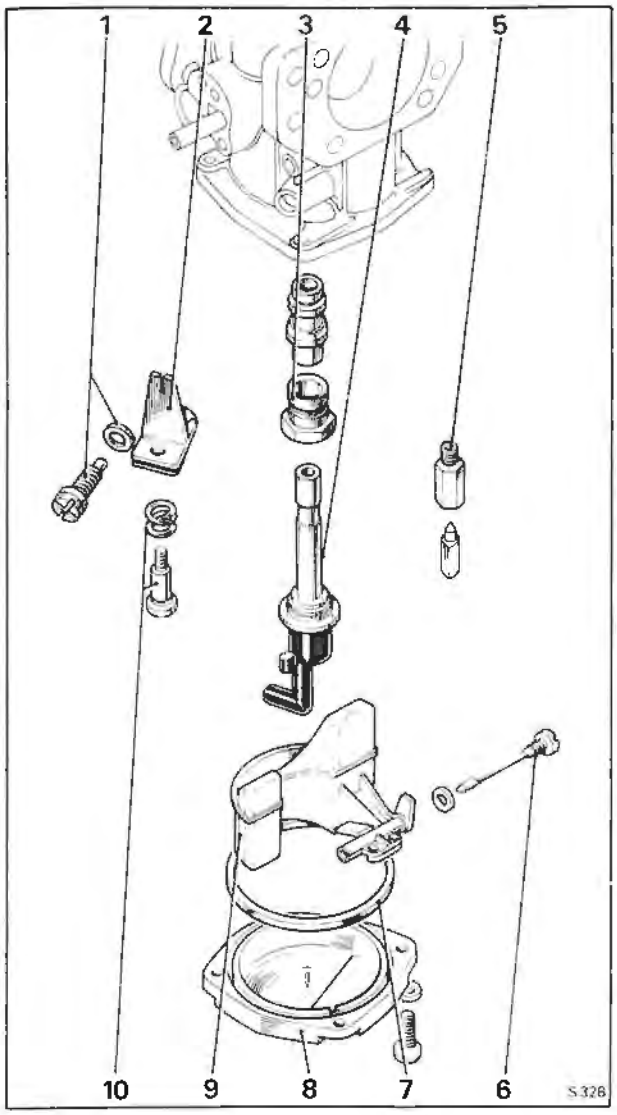

Fig. U29 Dismantling a carburetter (Lower half)

1 Jet adjusting screw and 'O' ring
2 Jet adjusting lever
3 Jet bearing assembly
4 Jet
5 Float chamber needle valve assembly
6 Float pivot spindle
7 Sealing ring
8 Bottom cover plate
9 Float
10 Jet lever adjusting screw

Carburetter - To inspect

1. Examine the throttle spindle and its bearings in the carburetter body; check for excessive play, and fit new parts if necessary.

2. Examine the float needle and seating for damage and excessive wear; fit new parts if necessary.

3. Examine all rubber seals and 'O' rings for damage or deterioration; fit new parts if necessary. **The cover-plate sealing ring must be renewed.**

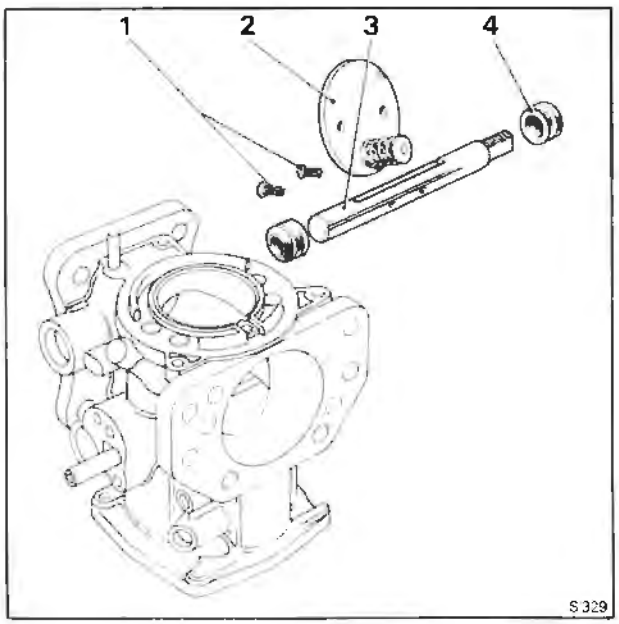

Fig. U30 Dismantling a carburetter (Throttle disc assembly)

1 Throttle disc retaining screws
2 Throttle disc assembly
3 Throttle spindle
4 Seal

4. Examine the carburetter body for cracks and damage and for security of the brass connections and the piston key.

5. Clean the inside of the suction chamber and piston rod guide with fuel or methylated spirit (denatured alcohol) and wipe dry. **Abrasives must not be used.**

6. Examine the suction chamber and piston for damage and signs of scoring.

7. Check that all the balls are in the piston ball race (2 rows, 6 per row). Fit the piston into the suction chamber, without the damper and spring, hold the assembly in a horizontal position and spin the piston. The piston should spin freely in the suction chamber without any tendency to stick.

Carburetter - To assemble

Assemble the carburetter by reversing the procedure given for removal, noting the following points.

1. Ensure that the throttle disc is fitted in its original position.

2. New throttle disc retaining screws must be used when refitting the disc. Ensure that the throttle disc is correctly positioned and closes correctly before tightening the retaining screws. Spread the split ends of the screws sufficiently to prevent turning.

3. Position the throttle spindle end seals just below the spindle housing flange.

4. When fitting the jet assembly to the adjusting

lever ensure that the jet head moves freely in the bi-metal cut-out.

5. Fit a new float pivot spindle sealing washer or anneal the existing washer.

Check the level of the float in the float chamber (refer to Carburetter float level - To set).

6. Check that the small diameter of the jet adjusting screw engages the slot in the adjusting lever and set the jet 3,05 mm. (0.12 in.) below the bridge of the body.

7. Ensure that the needle guide etch mark aligns correctly with the piston transfer holes. After fitting the needle assembly, check that the shoulder of the guide aligns with the face of the piston (see Fig. U27).

8. To prevent the piston spring from being 'wound up' during reassembly, temporarily fit the piston and suction chamber, less the piston spring, to the body and pencil mark their relative positions to each other. Fit the spring to the piston, hold the suction chamber above the piston, align the pencil marks and lower the chamber over the spring and piston.

Before assembly ensure that the damper retainer (piston ball race clip) is refitted by pressing it fully into the piston rod (see Fig. U31).

The damper retainer (piston ball race clip) can also be installed with the suction chamber fitted to the engine by using fitting tool RH 9086.

Carburetter float level - To set

1. Remove the carburetter from the engine.
2. Invert the carburetter.
3. Mark the bottom cover-plate and carburetter to ensure correct assembly, unscrew the retaining screws and remove the cover complete with the sealing ring.

A new rubber sealing ring must be installed when fitting the cover-plate.

4. Ensure that the float chamber needle valve is held in the closed position by the weight of the float only.
5. Check that the lowest point on the float (see Fig. U32) is either level with the float chamber face, or up to 1.52 mm. (0.060 in.) below.
6. If necessary, adjust the float position by carefully bending the brass pad.
7. Check that the float pivots correctly about the spindle.

Carburetter air valve damper - To top-up

The upper portion of the guide spindle, attached to the air valve piston in each carburetter, is hollow and is filled with the same type of oil as used in the engine.

1. Unscrew the damper cap and carefully raise the damper until the damper, **together with the air valve piston,** reach the top of their travel. Ensure that the retainer is not displaced from its position in the piston rod (see Fig. U31).

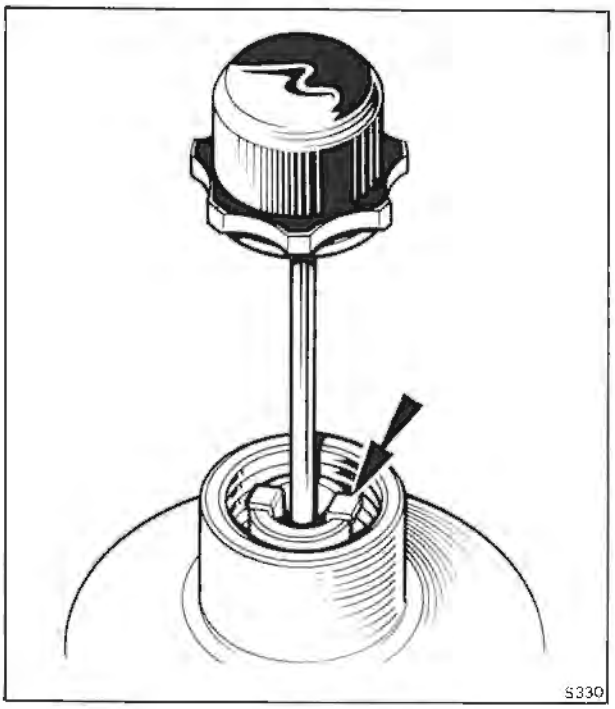

Fig. U31 Position of damper retainer

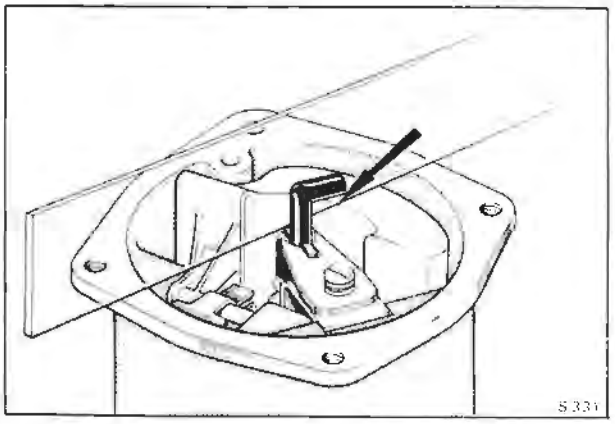

Fig. U32 Checking the float level

2. Holding the damper and piston in the raised position; fill the recess in the damper retainer (piston ball race clip) with clean engine oil.
3. Lower the damper until the cap contacts the neck of the suction chamber, then carefully raise the damper and piston again and check the oil level; this is correct if the oil level is just visible in the bottom of the recess in the damper retainer (piston ball race clip). If the oil level is not visible, repeat the topping-up procedure until the oil level is correct.
4. Check that the damper retainer (piston ball race clip) is still in its correct position in the piston rod as shown in Figure U31, then lower the damper and screw the damper cap firmly into position.

Printed in England
© Rolls-Royce Motors Limited 1978

January 1979
T.S.D. 4200
(U.S.A. & Canada 1979 Model year)

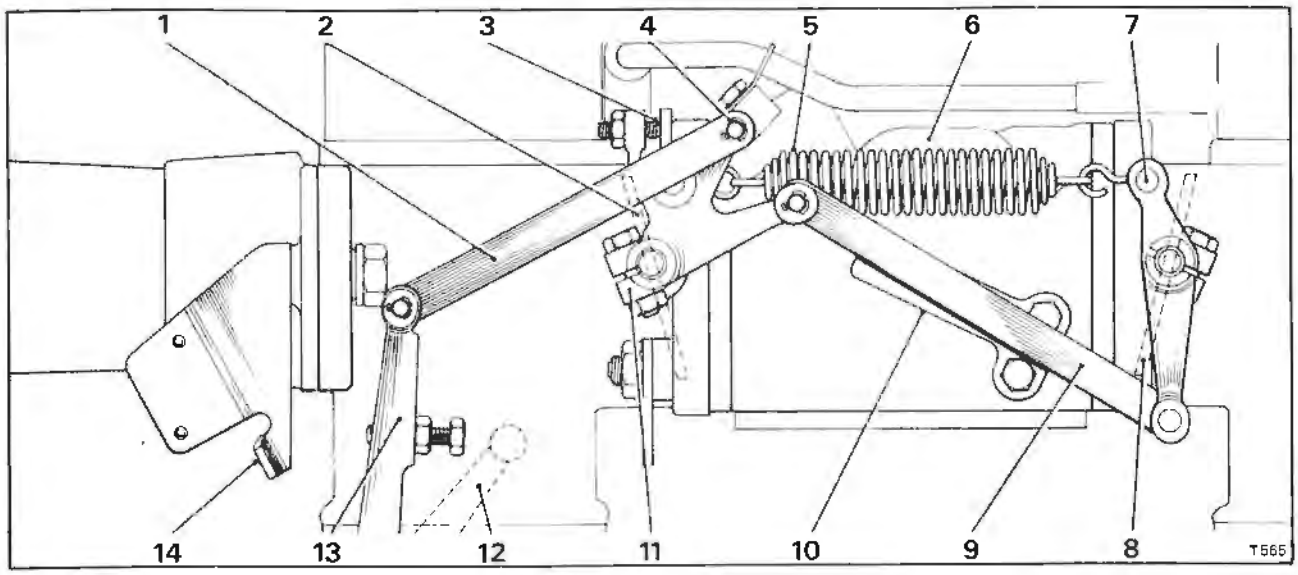

Fig. U33 Carburetter throttle linkage

1 Drive link
2 'A' bank carburetter throttle butterfly
3 Idle stop screw
4 Eccentric throttle adjuster
5 Throttle spring
6 Carburetter 'tee' piece
7 'B' bank carburetter throttle lever
8 'B' bank carburetter throttle butterfly
9 Cross link
10 Throttle cross link guide bracket
11 'A' bank carburetter throttle lever
12 Rear manifold shaft lever
13 Front manifold shaft lever
14 Full throttle stop

If the damper retainer (piston ball race clip) becomes inadvertently displaced during the topping-up procedure or if the damper should be removed from the piston, do not fit the damper cap or run the engine until the retainer has been returned to its correct position in the piston rod. The special tool RH 9086 should be used to fit damper retainer (piston ball race clip).

Carburetter throttle linkage - To fit and set (see Fig. U33)

1. Assemble 'A' bank and 'B' bank throttle levers (items 7 and 11) onto the carburetter spindles.
2. Fit the setting jig (RH 8880) into position on the throttle levers.
3. Fully close 'B' bank carburetter butterfly (item 8).
4. Tighten the pinch bolt securing 'B' bank throttle lever.
5. Fully close 'A' bank carburetter butterfly (item 2).
6. Tighten the pinch bolt securing 'A' bank throttle lever.
7. Fit the throttle spring (item 5) to the throttle levers.
8. Remove the setting jig from the throttle levers.
9. Fit the cross link guide bracket (item 10) to the carburetter 'tee' piece (item 6). Secure in position with two small screws which should be 'locked' using two tab washers.
10. Fit the cross link (item 9) and the eccentric throttle adjuster (item 4) onto the throttle levers, ensuring that both throttle butterflies are closed when adjusting and tightening the eccentric adjuster.

Note
The eccentric pin should be set in the lowest position possible.

11. Ensure that the cross link guide (item 10) has a clearance of between 1,27 mm. (0.050 in.) and 1,78 mm. (0.070 in.) with the cross link. If necessary bend the guide to give these clearances.
12. Check that the throttle linkage moves freely.
13. Fit the idle stop screw (item 3) and lock-nut; adjust until the screw just contacts the stop bracket with the throttle butterflies remaining in the closed throttle position.
14. Screw down the idle stop screw ½ turn.
15. Connect one end of the drive link (item 1) to the 'B' bank throttle lever and the other end, to the manifold shaft lever (item 13).
16. Operate the linkage to ensure free movement.
17. With the throttles in the closed position check that the relationship between the 'A' bank control shaft to control rod lever (item 12) on the rear of the manifold shaft and the front manifold shaft lever (item 13) is as illustrated in Figure U33. Tighten the securing bolts on both levers.
18. Operate the mechanism; check for freedom of movement within the linkage and also clearance with the various engine components.
19. To set the remainder of the linkage from the control rod lever on the rear of the manifold shaft to the accelerator pedal refer to Chapter K - Fuel system.

Printed in England
© Rolls-Royce Motors Limited 1978

Carburetters - To set

The carburetters fitted to these cars are adjusted at the factory using special equipment to ensure that their settings comply with the current emission control regulations.

Under normal circumstances the carburetters should not require adjustment in service.

If however, adjustment is found necessary due to inadvertent disturbance or replacement of a component set the carburetters by carrying out the following operations in the sequence given.

a. Set throttle linkage and temporarily set engine idle speed. Check linkage clearances.
b. Set cold start 'fast-idle' cam.
c. Tune carburetters.
d. Set cold start 'fast-idle' speed.
e. Set full throttle stop.
f. Set the Kickdown and Full throttle E.G.R. cut-off micro-switch.

Carburetter tuning

Preliminary checks

Before tuning the carburetters the following checks should be carried out.

Ensure that the vehicle is in 'Park', the parking brake firmly applied and that the gear range actuator thermal cut-out has been removed from the main fusebox.

1. Check the condition of the sparking plugs.
2. Check the ignition timing.
3. Check the flow through the choke stove pipe.
4. Check the entire induction system for air leaks.
5. Check the purge line flow rate.
6. Ensure that the air conditioning system is switched off.
7. Start the engine and warm-up; allow to run for at least 5 minutes after the thermostat has opened.
8. Stop the engine, ensure that the choke butterfly valve is fully open and the choke 'fast-idle' off.
9. Connect an electric impulse tachometer in accordance with manufacturer's instructions.
10. Check the float chamber depression.
11. Check the exhaust gas recirculation system for correct operation.
12. Check and set the full throttle exhaust gas recirculation cut-out micro-switch situated under the accelerator pedal.

Carburetter idle air balance

1. Ensure that the usual safety precautions are carried out (i.e. parking brake firmly applied, gear range selector lever in 'Park', etc.) and connect an impulse tachometer in accordance with the manufacturer's instructions.
2. Disconnect the speed control chain.
3. Start and run the engine until normal operating temperature is attained.
4. Stop the engine.
5. Fit the dial gauges RH 9105 with RH 8841 (kit to convert dial gauges to fit the HIF7 carburetters) to the carburetter dashpots in place of the dampers.
6. Zero the gauges with the engine stopped and lightly tighten the gauge clamp screws.
7. Start and run the engine at the idle speed setting (650 r.p.m.); adjust the carburetter piston lifts to be equal (within 10%) using the eccentric adjuster (see Fig. U33).
8. The average piston lift reading should now be between 2,03 mm. and 2,54 mm. (0.080 in. and 0.100 in.).

If the idle speed piston lift is over 2,54 mm. (0.100 in.) check the ignition timing at idle as this condition may result in unsatisfactory driveability.

9. Stop the engine and remove the impulse tachometer.
10. Remove the dial gauges and fit the carburetter dampers. **Ensure that the dashpot ball race clips (piston damper retainers) are fitted correctly and are pressed fully into the piston rod (see Fig. U31) using tool RH 9086.**
11. Connect the speed control chain and adjust to give a minimum slack condition, consistant with no impediment to the throttle lever to return to the idle speed position.

Carburetter mixture strength - To set

1. Ensure that the usual safety precautions are carried out (i.e. parking brake firmly applied, gear range selector lever in 'Park', etc.) and connect an impulse tachometer in accordance with the manufacturer's instructions.
2. Remove the air intake, blank off the hot idle compensator feed drilling (see Fig. U34) and replace the intake.

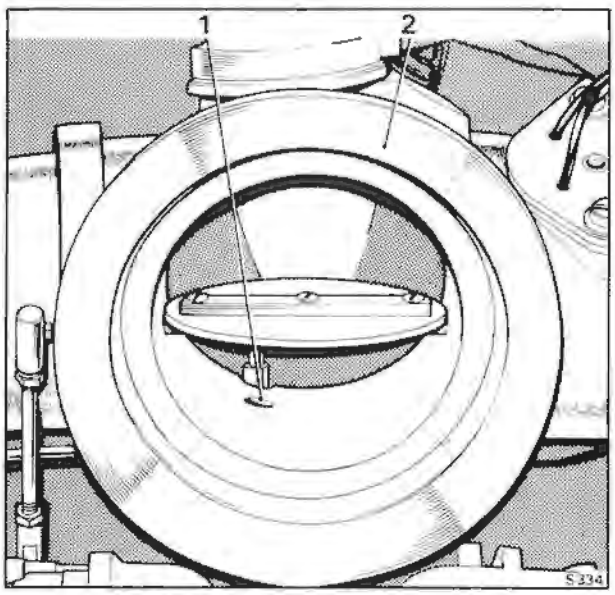

Fig. U34 Hot idle mixture compensator feed
1 Hot idle compensator feed
2 Air intake butterfly housing

January 1979
T.S.D. 4200
(U.S.A. & Canada 1979 Model year)

3. Remove the air inlet hose from the air injection system pressure relief valve and fit a blank over the valve (a suitable blank may be produced from a short length of rubber hose with one end plugged).

Note

The air injection system is inoperative when the relief valve inlet air hose is disconnected from the air pump. The valve must be blanked to prevent air being drawn into the exhaust port by pulsations in the exhaust system since this would affect the idle CO reading.

4. Disconnect the E.G.R. valve signal pipe at the cut-off solenoid 'Y' piece, blank off the open 'Y' piece hose connection.

5. Unscrew and remove the pressure tapping cap from the weakening device.

6. Ensure that the engine has run for at least 25 minutes after the thermostat has opened.

7. Purge the engine at 2 000 r.p.m. in 'Neutral' for ¼ minute. Allow the engine speed to return to the idle setting and ensure that this is 650 r.p.m.; adjust if necessary using the idle stop screw.

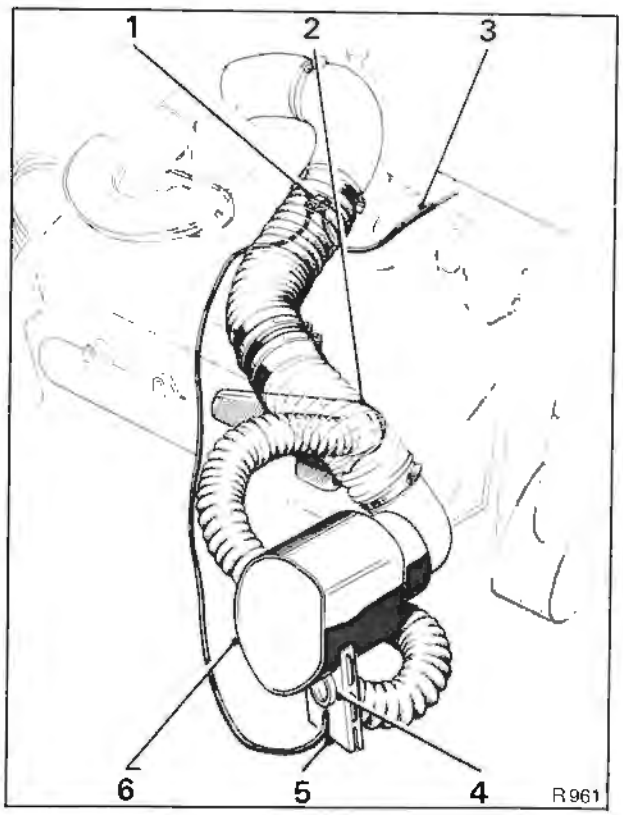

Fig. U35 Temperature controlled air intake

1 Temperature sensor
2 Hot air scoop
3 Manifold vacuum hose
4 Air blend valve
5 Cold air intake
6 Air cleaner/silencer

8. Insert the probe of a CO meter into either exhaust system tailpipe and check the reading.

9. The CO meter reading should be 1% to 4%. If the reading is outside the limits quoted

a. Check for induction system leaks (if below 1%)

b. Check the choke stove and purge line flow rates.

10. If after carrying out Operation 9 the idle speed CO meter reading is still outside the limits quoted, the carburetter mixture screws (see Fig. U25) may be adjusted by equal amounts up to ½ turn in the same direction in order to achieve the mean limit of 2.5%. No attempt should be made to adjust the CO reading if it is in the region of 2.5% to 4.0%.

Note

a. Clockwise rotation of the mixture screws will richen the mixture.

b. The tuning operations should be carried out in the shortest possible time. If the time exceeds 3 minutes, run the engine at 2 000 r.p.m. in 'Neutral' for ¼ minute and then resume the tuning operations. Repeat this purging operation if a further period of 3 minutes is exceeded.

After purging the system gently tap all around the neck of the carburetter suction chamber with a lightweight non-metallic object (i.e. the wooden handle of a small screwdriver), to eliminate carburetter piston hysteresis. The engine is to be run on Indolene Clear (HO) reference fuel or equivalent (Unleaded gasoline only).

11. Stop the engine.

12. Fit the pressure tapping cap to the weakening device, fit a new sealing washer if necessary.

13. Remove the blank from the air pressure relief valve and connect the feed hose from the air pump to the relief valve.

14. Remove the blank from the cut-off solenoid 'Y' piece hose connection and connect the E.G.R. signal pipe to the solenoid connection.

15. Start the engine and check the idle speed, this should be 650 r.p.m.; adjust by means of the idle stop screw (refer to Section U6).

16. Stop the engine, remove the air intake and discard the blank from the hot idle compensator feed drilling; fit the air intake.

17. Remove the impulse tachometer.

Temperature controlled air intake

To ensure rapid warm-up and improve control of the air/fuel ratio a temperature controlled air intake is fitted (see Fig. U35).

A vacuum operated blending valve attached to the air cleaner assembly is controlled by a thermal sensor in the air intake elbow. This valve blends hot air from a pick-up point (scoop) adjacent to the exhaust manifold with cold air from under the front wing; thus maintaining a constant temperature of the intake air as it enters the carburetters.

All other details for the Temperature controlled air intake system are given in Chapter K except for the checking procedure which is as follows.

Temperature controlled air intake - To check

1. Disconnect the air intake hose at the intake elbow and check that the correct temperature sensor is fitted, this should be colour coded white.
2. Disconnect both vacuum hoses at the temperature sensor.
3. Place the open ends of both hoses together and check that there is no obvious air leak. Detach the open ends of the hoses from each other (i.e. release the vacuum sharply), and listen for the vacuum motor within the wing to 'click' open.
4. Reconnect the hoses.

Note

If there is an air leak or the operation of the temperature controlled air intake is suspect, remove the right-hand front underwing sheet and check the hose connection to the vacuum motor; also observe the operation of the temperature flap.

Printed in England
© Rolls-Royce Motors Limited 1978

January 1979
T.S.D. 4200
(U.S.A. & Canada 1979 Model year)

Section U6

Ignition system

Data

Ignition timing	9° B.T.D.C. (Static) 15° B.T.D.C. at 1 200 r.p.m. 7° - 13° B.T.D.C. at idle speed (650 r.p.m.) (Approach 1 200 r.p.m. from a higher speed).

Ignition control system

The ignition system utilises an Opus distributor (in which an oscillator pick-up and control unit replace the conventional contact breaker), a high load ignition coil and a ballast resistor. The control unit comprises an electronic oscillator, amplifier and power transistor.

A drum with eight ferrite rods (one per cylinder) moulded into the outer edge is mounted onto the distributor drive-shaft. As the drum rotates a voltage is created each time a ferrite rod passes the oscillator pick-up, this signal is then amplified and used to switch-off the normally conducting power transistor in the primary coil circuit thus inducing a high voltage in the secondary winding which is distributed to the sparking plugs in the normal manner.

The distributor has a conventional centrifugal advance mechanism.

In addition, **cars other than those destined for California** the carburetter gated vacuum signal is applied to the capsule to advance the ignition timing for part throttle economy during open road cruising. This vacuum signal is inhibited by a solenoid valve until a predetermined air intake temperature is reached.

The Opus distributor provides increased accuracy of timing and increased service life before maintenance is required.

For the removal and fitting instructions of the ignition system components refer to Chapter M.

Ignition - To time (using a stroboscope)

The ignition is timed on A1 cylinder which is located at the front left-hand side of the engine (viewed from the front of the car).

Note

If the ignition timing is to be set, ensure that the sparking plugs are in good condition before running the engine; if they require cleaning or renewal the sparking plugs gap should be set to 0,9 mm. (0.035 in.).

1. To check the ignition timing commence by running the engine until normal operating temperature is attained and the choke 'fast-idle' is in the off position. Switch off the engine.

2. Connect a stroboscope and a tachometer to the engine as described in the instructions supplied with the respective equipment. **On cars other than those destined for California,** disconnect the feed hose at the distributor vacuum advance capsule and blank off the feed hose.

3. Start the engine and adjust the throttle stop screw to give an idle speed of 1 200 r.p.m. When setting the engine idle speed reduce from a higher speed to 1 200 r.p.m.

4. Direct the flashing light of the stroboscope onto the crankshaft damper timing marks and timing pointer; the pointer is positioned on the right-hand side of the crankshaft damper when viewed from the front of the engine.

5. If the timing pointer does not coincide with the 15° B.T.D.C. mark on the crankshaft damper adjust the ignition timing as follows.

6. Release the clamp screw on the distributor and rotate the head of the distributor in the appropriate direction until the correct timing is obtained. Clockwise rotation of the distributor head advances the ignition and conversely anti-clockwise rotation retards the ignition. After adjustment has been carried out tighten the clamp screw and again check to ensure that the timing has not altered whilst tightening the clamp screw.

7. Set the engine idle speed to 650 r.p.m.

8. Direct the flashing light of the stroboscope onto the crankshaft damper timing marks and timing pointer. Check that the ignition timing is approximately 7° - 13° B.T.D.C.

Operations 9 to 11 inclusive apply only to cars employing a vacuum advance capsule (i.e. cars other than those destined for Califomia).

9. Disconnect the hose from the vacuum manifold to the purge line restrictor at the restrictor (see Fig. U4). Connect a suitable length of hose between this hose and the connection on the distributor vacuum capsule.

10. Start the engine and set the idle speed to 650 r.p.m.

11. Direct the flashing light of the stroboscope onto the crankshaft damper timing marks and timing pointer. Check that the ignition timing has advanced to between 15°and 25°B.T.D.C. If the ignition timing has not advanced, the distributor assembly is faulty.

12. Stop the engine.

Printed in England
© Rolls-Royce Motors Limited 1979

November 1979
T.S.D. 4200
(U.S.A. & Canada 1979 Model year)

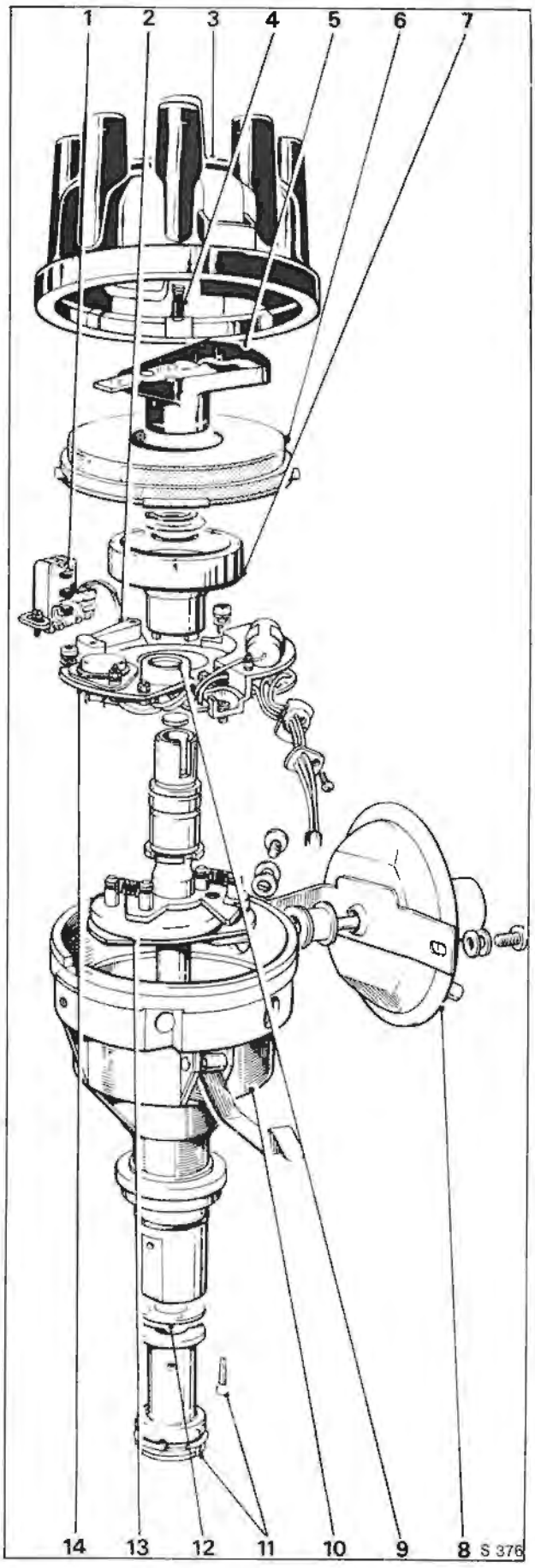

13. Fit all hoses to their correct connections.
14. Start the engine and set the idle speed to 650 r.p.m.
15. Stop the engine and remove all the test equipment.

Setting the engine idle speed
Ensure that the engine is at normal operating temperature and that the choke 'fast-idle' is in the off position.

The air conditioning system must be switched off and a tachometer connected to the engine in accordance with the manufacturer's instructions.
1. Stop the engine, remove the air intake and blank off the hot idle compensator feed drilling (see Fig. U34); replace the air intake.
2. Start the engine and, if necessary, adjust the engine idle speed to 650 r.p.m. using the throttle stop screw.
3. Stop the engine and remove the air intake. Remove the blank from the hot idle compensator feed drilling and fit the air intake. Detach the tachometer and stroboscopic timing equipment.

Distributor maintenance
The distributor requires no routine maintenance except that, at the mileage intervals specified in the Service Schedules, the moulded cover and H.T. rotor arm should be removed and the spindle shaft bearings lubricated by inserting a few drops of engine oil onto the felt pad. The automatic advance mechanism should also be lubricated at this time with a few drops of engine oil inserted through apertures in the base plate.

Sparking plugs
The sparking plugs approved for this car are Champion RN 14 Y. Before fitting the plugs, set the gaps with the aid of a feeler gauge to 0,9 mm. (0.035 in.) and lightly smear the threads with 'Graphogen' grease.

Fig. U36 Ignition distributor
1 Pick-up module
2 Pick-up arm
3 Distributor cover (cap)
4 High tension brush and spring
5 Rotor arm
6 Flash over shield (dust cover)
7 Timing rotor
8 Vacuum advance unit (not connected on cars destined for California)
9 Control unit
10 Distributor body
11 Driving dog and pin
12 Thrust washer
13 Automatic advance mechanism
14 Electronic module assembly

Section U7

Electrical components

The electrical components described in this section would normally appear in Chapter M - Electrical system, however, as they are used in connection with the emission control system it is thought more practical to include the information in this Chapter.

The components concerned are as follows.

E.G.R. system and Weakening system lock-out switch
Anti 'run-on' solenoid
E.G.R. system and Weakening system cut-off solenoid
Kickdown and Full throttle E.G.R. cut-off micro-switch

E.G.R. system and Weakening system lock-out switch

The bi-metal lock-out switch is situated in the side of the air intake elbow adjacent to the choke stove take-off pipe and 'B' bank carburetter (see Fig. U37).

E.G.R. system and Weakening system lock-out switch - To remove

1. Withdraw the protective sheath and detach the electrical connections, noting the position of the connections to assist identification when assembling.
2. Unscrew and remove the three setscrews and spring washers.
3. Withdraw the lock-out switch.

E.G.R. system and Weakening system lock-out switch - To fit

Fit the lock-out switch by reversing the procedure given for removal.

1. Ensure that the gasket is in a good condition.
2. The setscrews must be fitted with spring washers.
3. The protective sheath must be fitted over the electrical connections.

E.G.R. system and Weakening system lock-out switch circuit wiring - To check

1. Detach the electrical connection from the E.G.R. and Weakening systems lock-out switch.
2. Attach one side of a test lamp to the White cable in the connection block and the other side to a good earth.
3. Switch on the ignition noting that the test lamp bulb illuminates.
4. Switch off the ignition noting that the test lamp bulb extinguishes.

E.G.R. system and Weakening system lock-out switch - To check

1. Withdraw the protective sheath from the electrical connections.
2. Do not disturb any wiring but connect both electrical connections via a test lamp.

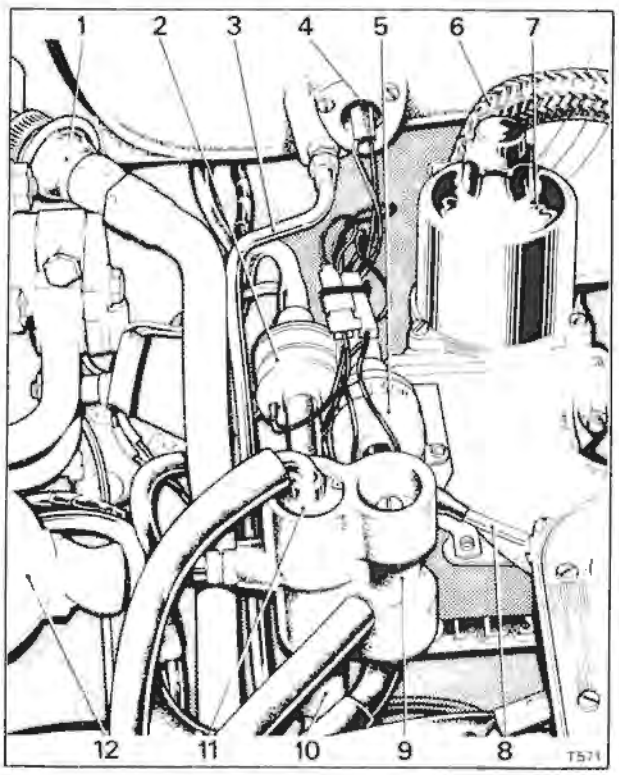

Fig. U37 Solenoid platform

1 Check valve
2 Anti 'run-on' solenoid
3 Choke stove pipe
4 E.G.R. system and Weakening system lock-out switch
5 E.G.R. system and Weakening system cut-off solenoid
6 Exhaust gas distribution pipe
7 'B' bank carburetter
8 E.G.R. signal hose
9 Mixture weakening device
10 Fuel receiver
11 Float chamber vent valve
12 Engine oil filler cap

Printed in England

© Rolls-Royce Motors Limited 1980

July 1980

T.S.D. 4200
(U.S.A. & Canada
1979 Model year)

3. Ensure that the engine is cold [i.e. intake air temperature below approximately 14° C. (57° F.)] and switch on the ignition.
4. Check that the test lamp bulb is illuminated.
5. Start and run the engine; as the engine warms-up [i.e. the inlet air temperature exceeds approximately 14° C. (57° F.)] the test lamp bulb should extinguish.

Anti 'run-on' solenoid

The anti 'run-on' solenoid is situated on a platform adjacent to 'B' bank carburetter; it is the foremost of the two solenoids fitted on the platform.

The use of low octane fuel often causes an engine to 'diesel' (i.e. to continue to run-on after the ignition has been switched off, particularly when the engine is hot). To prevent this an anti 'run-on' solenoid is fitted between the fuel receiver and the induction manifold (see Figs. U4 and U37). When the ignition is switched off the solenoid valve opens and connects the weakening system to the induction manifold, thus creating a high depression in the float chambers which cuts off the fuel supply.

Anti 'run-on' solenoid - To remove

1. Disconnect the rubber hose from either side of the solenoid.
2. Disconnect the two electrical leads at their 'Lucar' connections.
3. Unscrew and remove the two screws situated one on either side of the solenoid body.
4. Withdraw the anti 'run-on' solenoid.

Anti 'run-on' solenoid - To fit

Fit the anti 'run-on' solenoid by reversing the procedure given for removal

Anti 'run-on' solenoid circuit wiring - To check

1. Connect a test lamp across the two 'Lucar' connections to the solenoid. **Do not disconnect the two connections.**
2. Switch on the ignition and check that the test lamp bulb illuminates.
3. Switch off the ignition and check that the test lamp bulb is extinguished.

Anti 'run-on' solenoid - To check

1. Ensure that the usual safety precautions are carried out (i.e. parking brake firmly applied, gear range selector lever in 'Park', etc.).
2. Connect an impulse tachometer in accordance with the manufacturer's instructions.
3. Detach the weakening device pressure tapping cap (see Fig. U20) and connect a manometer capable of reading 0 to 15,24 cm. (0 to 6 in.) of water to the tapping.
4. Disconnect the carburetter vacuum signal to the E.G.R. valve(s) at the cut-off solenoid end of the hose. Blank off the signal hose.
5. Start and run the engine at the idle speed setting (650 r.p.m.).
6. Switch off the engine and observe the reading on the manometer. The reading should momentarily increase to approximately 15,24 cm.(6.0 in.) as the engine stops.
7. If the reading does not increase, the operation of the anti 'run-on' solenoid is incorrect.

This could be caused by the following.

a. A blockage in the hose (see Fig. U20) from the anti 'run-on' solenoid to the weakening device.
b. A blockage in the hose (see Fig. U20) from the anti 'run-on' solenoid to the vacuum manifold or in the vacuum manifold.
c. Incorrect wiring to the anti 'run-on' solenoid.
d. Faulty anti 'run-on' solenoid.

E.G.R. system and Weakening system cut-off solenoid

The E.G.R. system and weakening system cut-off solenoid is the rearmost of the two solenoids mounted on the platform adjacent to 'B' bank carburetter (see Figs. U4 and U37).

E.G.R. system and Weakening system cut-off solenoid - To remove

1. Detach the electrical connections, noting the position of the connections to assist identification when assembling.
2. Detach the rubber hose from either side of the solenoid.
3. Unscrew the two 'cheese-headed' mounting screws and withdraw the solenoid.

E.G.R. system and Weakening system cut-off solenoid - To fit

Fit the cut-off solenoid by reversing the procedure given for removal.

E.G.R. system and Weakening system cut-off solenoid circuit wiring - To check

1. Connect a test lamp across the two 'Lucar' connections to the solenoid. **Do not disconnect the two connections.**
2. Ensure the engine is cold.
3. Switch on the ignition and start the engine noting that the bulb of the test lamp is illuminated.
4. Run the engine; noting that as the engine warms-up [the inlet air temperature reaches approximately 14 °C. (57° F.)] the test lamp bulb should extinguish.
5. Stop the engine and allow to cool, noting that when the engine becomes cold [the air in the intake drops to a temperature of approximately 12 °C. (54 °F.)] the test lamp bulb again illuminates.

E.G.R. system and Weakening system cut-off solenoid - To check

1. Detach the carburetter vacuum signal to weakening system cut-off solenoid hose at the

solenoid and blank off the hose.

Connect a suitable length of hose to the solenoid connection.

2. Clean the open end of the additional hose.
3. Switch on the ignition.
4. Place the hose in the mouth and apply pressure.
5. If the operation of the solenoid is correct note that the following conditions apply.

a. With a cold engine [i.e. the inlet air temperature below approximately 14 °C. (57 °F.)] blowing air through the hose **should not** be possible.

b. As the engine warms-up [i.e. an inlet air temperature of approximately 14° C. (57° F.) or above] blowing air through the hose should be possible.

c. As the engine again cools [i.e. the inlet air temperature drops below approximately 12° C. (54 °F.)] the conditions described in (a) should again apply.

Kickdown and Full throttle E.G.R. cut-off micro-switch

This micro-switch is situated on the underside of the car body below the accelerator pedal, it is a dual purpose micro-switch providing kickdown (detent) for the torque converter transmission and cut-out for the E.G.R. system.

Kickdown and Full throttle E.G.R. cut-off micro-switch - To remove

1. Drive the car onto a ramp and raise to a suitable working height.
2. From inside the car, locate the micro-switch operating plunger beneath the accelerator pedal.
3. Unscrew the large retaining nut and withdraw the washer.
4. From under the car detach the 'Lucar' connections and withdraw the micro-switch assembly.

Kickdown and Full throttle E.G.R. cut-off micro-switch - To dismantle

The assembly comprises the micro-switch, plunger and casing, the assembly should be removed from the car before any dismantling is commenced.

1. Using a screwdriver carefully 'ease back' the indentations which crimp around the cover of the assembly.
2. Remove the cover.
3. Disconnect the two electrical cables from the micro-switch. The White/Green cable has a 'Lucar' connection and the White cable is retained by a small cheesehead screw.
4. Unscrew the two 6B.A. nuts securing the micro-switch to its mounting bracket. Withdraw the cheesehead screws and collect the two washers from each screw. Withdraw the micro-switch.
5. Unscrew the two cheesehead screws retaining the micro-switch mounting bracket. Withdraw the bracket.
6. Remove the circlip from around the plunger assembly.

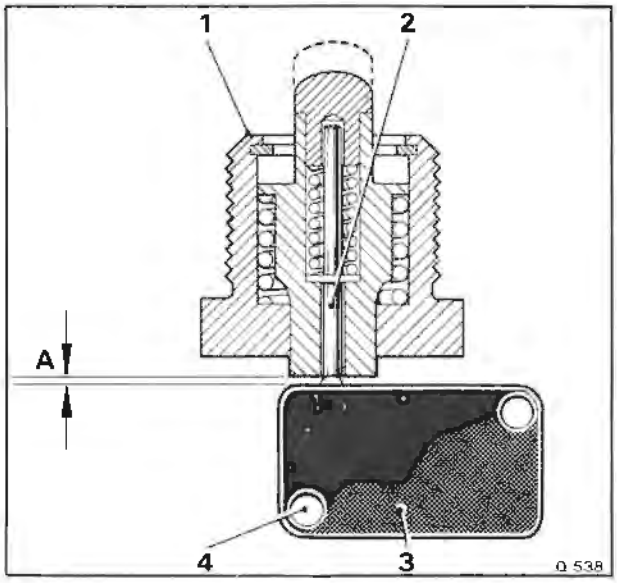

Fig. U38 Kickdown and Full throttle E.G.R. cut-off micro-switch

1 Kickdown and Full throttle E.G.R. cut-off plunger assembly
2 Secondary plunger
3 Micro-switch
4 Elongated hole in mounting plate (micro-switch adjustment)
A Clearance of 0,127 mm. (0.005 in.)

7. Withdraw the plunger assembly and spring

Kickdown and Full throttle E.G.R. cut-off micro-switch - To assemble

Assemble the micro-switch and plunger by reversing the procedure given for dismantling, noting the following points.

1. Ensure that the rubber seal is in a good condition and fitted securely to the body of the assembly. The seal is secured using Dunlop Adhesive S1240 or equivalent.

Kickdown and Full Throttle E.G.R. cut-off micro-switch - To set

1. Ensure that the carburetter linkage (refer to Section U5) and the accelerator pedal linkage (refer to Section K7) are correctly set. Swing the micro-switch towards the base of the plunger until a 0,254 mm. to 0,762 mm. (0.010 in. to 0.030 in.) gap exists between the micro-switch button and the plunger.
2. Tighten the micro-switch securing nuts and afterwards, check that the gap set in Operation 1 has not been disturbed.
3. Slowly depress the plunger to obtain full stroke. Check that the switch operates (audible click) during this operation.
4. Ensure that with the main plunger fully depressed it is still clear of the micro-switch case (see Fig. U38).

Printed in England
© Rolls-Royce Motors Limited 1978
January 1979
T.S.D. 4200
(U.S.A. & Canada 1979 Model year)

5. Slowly release the plunger ensuring that the micro-switch contacts open (audible click).
6. Ensure that the clearance set between the plunger and the micro-switch button, remains as set in Operation 1.

Kickdown and Full throttle E.G.R. cut-off micro-switch - To check

To check the circuit wiring and micro-switch operation for full throttle E.G.R. cut-off proceed as follows.

1. Carry out Operations 1 to 4 inclusive under the heading 'E.G.R. system and Weakening system solenoid circuit wiring - To check'.
2. Stop the engine and depress the accelerator to activate the micro-switch.
3. Ensure that the test lamp bulb is illuminated whilst the full throttle position is maintained with the accelerator pedal.

Section U8

Fault diagnosis

Symptoms	Possible cause
1. Engine will not start. (Starter motor operating).	1. (a) Ignition circuit broken. (b) Failed anti 'run-on' solenoid or failure of electrical supply circuit. (c) Ignition system faulty. (d) Damaged or contaminated ignition high tension circuit. (e) Blocked fuel feed line, fouled float chamber filters or fouled fuel recirculation restrictor. (f) Faulty choke bi-metal coil. (g) Choke solenoid inoperative. (h) Faulty choke 'fast-idle' mechanism. (i) Air leak into induction system. (j) Faulty hot idle mixture compensator. (k) Weakening device filter blocked, weakening device air intake non-return valve failed or blockage in rubber connecting hoses. (l) Faulty weakening device cut-off solenoid or failure of electrical supply circuit. (m) Faulty weakening device control switch or failure of electrical supply circuit. (n) Dislodged venturi in weakening device. (o) Flooding of carburetter float chamber or jet. (p) Exhaust gas recirculation valve(s) failed.
2. Engine idles very roughly.	2. (a) Ignition system faulty. (b) Fouled sparking plugs. (c) Damaged or contaminated ignition high tension circuit. (d) Fouled fuel recirculation restrictor. (e) Air leak into induction system. (f) Faulty hot idle compensator. (g) Weakening device filter blocked, weakening device air intake non-return valve failed or blockage in rubber connecting hoses. (h) Badly worn or damaged carburetter control linkage. (i) Flooding of carburetter float chamber or jet. (j) Sticking carburetter piston. (k) Incorrect operation of carburetter jet compensation. (l) Fouled carburetter float chamber or jet. (m) Exhaust gas recirculation valve(s) failed. (n) Incorrect operation of temperature controlled air intake system.
3. Engine stalls	3. (a) Ignition circuit broken. (b) Failed anti 'run-on' solenoid or failure of electrical supply circuit. (c) Ignition system faulty. (d) Damaged or contaminated ignition high tension circuit.

Printed in England
© Rolls-Royce Motors Limited 1978

Symptoms	Possible cause
3. Engine stalls (continued)	(e) Blocked fuel feed line, fouled float chamber filters or fouled fuel recirculation restrictor. (f) Air leak into induction system. (g) Faulty hot idle mixture compensator. (h) Weakening device filter blocked, weakening device air intake non-return valve failed or blockage in rubber connecting hoses. (i) Badly worn or damaged carburetter control linkage. (j) Flooding of carburetter float chamber or jet. (k) Sticking carburetter piston. (l) Incorrect operation of carburetter jet compensation. (m) Fouled carburetter float chamber or jet. (n) Exhaust gas recirculation valve(s) failed.
4. (i) Engine shows signs of power loss evident at high speeds and loading. (ii) Engine misfires particularly on hard acceleration from low speed.	4. (a) Ignition system faulty. (b) Fouled sparking plugs. (c) Damaged or contaminated ignition high tension circuit. (d) Blocked fuel feed line or fouled float chamber filters. (e) Choke system operation incorrect. (f) Sticking carburetter piston. (g) Fouled carburetter float chamber or jet. (h) Faulty exhaust gas recirculation full throttle cut-out switch or failure of electrical supply circuit. (i) Exhaust gas recirculation valve(s) failed. (j) Failed exhaust gas recirculation valve(s) cut-out solenoid or electrical supply circuit.
5. Engine hesitates or misfires under light load.	5. (a) Failed anti 'run-on' solenoid or failure of electrical supply circuit. (b) Ignition system faulty. (c) Fouled sparking plugs. (d) Damaged or contaminated ignition high tension circuit. (e) Blocked fuel feed line or fouled float chamber filters. (f) Air leak into induction system. (g) Faulty hot idle mixture compensator. (h) Weakening device filter blocked, weakening device air intake non-return valve failed or blockage in rubber connecting hoses. (i) Dislodged venturi in weakening device. (j) Flooding of carburetter float chamber or jet. (k) Incorrect operation of carburetter jet compensation. (l) Fouled carburetter float chamber or jet. (m) Exhaust gas recirculation valve(s) failed. (n) Incorrect operation of temperature controlled air intake system.

6. Increase in fuel consumption.	**6.** (a) Ignition system faulty. (b) Fouled fuel recirculation restrictor. (c) Faulty choke bi-metal coil. (d) Choke system operation incorrect. (e) Air leak into induction system. (f) Faulty hot idle mixture compensator. (g) Weakening device filter blocked, weakening device air intake non-return valve failed or blockage in rubber connecting hoses. (h) Faulty weakening device cut-off solenoid or failure of electrical supply circuit. (i) Faulty weakening device control switch or failure of electrical supply circuit. (j) Air leak in mixture weakening system. (k) Flooding of carburetter float chamber or jet. (l) Sticking carburetter piston. (m) Incorrect operation of carburetter jet compensation. (n) Incorrect purge flow rate. (o) Exhaust gas recirculation valve(s) failed.
7. Decrease in fuel consumption.	**7.** (a) Air leak in mixture weakening system. (b) Incorrect operation of carburetter jet compensation. (c) Incorrect purge flow rate. (d) Faulty exhaust gas recirculation temperature control switch or failure of electrical supply circuit. (e) Exhaust gas recirculation valve(s) failed.
8. Engine 'backfires' on overrun.	**8.** (a) Ignition system faulty. (b) Air leak into induction system. (c) Faulty hot idle mixture compensator. (d) Exhaust gas recirculation valve(s) failed.
9. Sudden increase in engine idle speed.	**9.** (a) Faulty choke 'fast-idle' mechanism. (b) Failed carburetter overrun valve.*
10. Excessive noise from air injection pump or system.	**10.** (a) Faulty or damaged air injection pump, relief or check valves, connecting hoses or pipes.

Printed in England
© Rolls-Royce Motors Limited 1978

Section U9

Workshop tools

Tool Number	Description
RH 8090	Pliers - wire hose clips
RH 8725	Flowmeter (rotameter type)
RH 8841	Dial gauge - carburetter piston lift
RH 8880	Setting jig - throttle levers
RH 8945	Connector - choke stove pipe
RH 9086	Fitting tool - carburetter piston ball race clip
RH 9096	Fitting tool - 'A' bank mixture adjusting screw tamperproof seal
RH 9097	Fitting tool - 'B' bank mixture adjusting screw tamperproof seal
RH 9105	Kit - to adapt RH 8841 to fit S.U. HIF 7 carburetters

Printed in England
© Rolls-Royce Motors Limited 1978

January 1979
T.S.D. 4200
(U.S.A. & Canada 1979 Model year)

Chapter U

Emission control systems

Applicable to 1980 model year cars destined for USA & Canada (except California)

Section

U1 Introduction
U2 Exhaust emission control system
U3 Fuel evaporative emission control system
U4 Crankcase emission control system
U5 Carburetters and Automatic choke system
U6 Ignition system
U7 Electrical components
U8 Fault diagnosis
U9 Workshop tools
U10 Running changes

Printed in England

© Rolls-Royce Motors Limited 1980

T.S.D. 4[illegible] January 1980
(U.S.A. & Canada 1980 model year except California)

Chapter U - 1980 U.S.A & Canada
(except California)

Issue record sheet 1

November 1980

The dates quoted below refer to the issue date of individual pages within this chapter.

Section	U1	U2	U3	U4	U5	U6	U7	U8	U9
Page No.									
1	Jan 80	Jan 80	Jan 80	Jan 80	Nov 80	Jan 80	Jan 80	Jan 80	Jan 80
2	Jan 80	Jan 80	Jan 80		Nov 80	Jan 80	Jan 80	Jan 80	
3	Jan 80	Jan 80	Jan 80		Jan 80		Jan 80	Jan 80	
4	Jan 80	Jan 80	Jan 80		Jan 80		Jan 80		
5		Jan 80	Jan 80		Jan 80				
6		Jan 80	Jan 80		Jan 80				
7		Jan 80	Jan 80		Jan 80				
8		Jan 80	Jan 80		Jan 80				
9					Jan 80				
10					Jan 80				
11					Jan 80				
12					Jan 80				
13									
14									
15									
16									
17									
18									
19									
20									
21									
22									
23									
24									
25									
26									
27									
28									
29									
30									
31									
32									
33									
34									
35									
36									
37									
38									
39									
40									
41									
42									
43									
44									
45									
46									
47									
48									

Printed in England

© Rolls-Royce Motors Limited 1980

Printed in England

© Rolls-Royce Motors Limited 1980

January 1980

T.S.D. 4200
(U.S.A. & Canada 1980 model year except California)

Section U1

Introduction

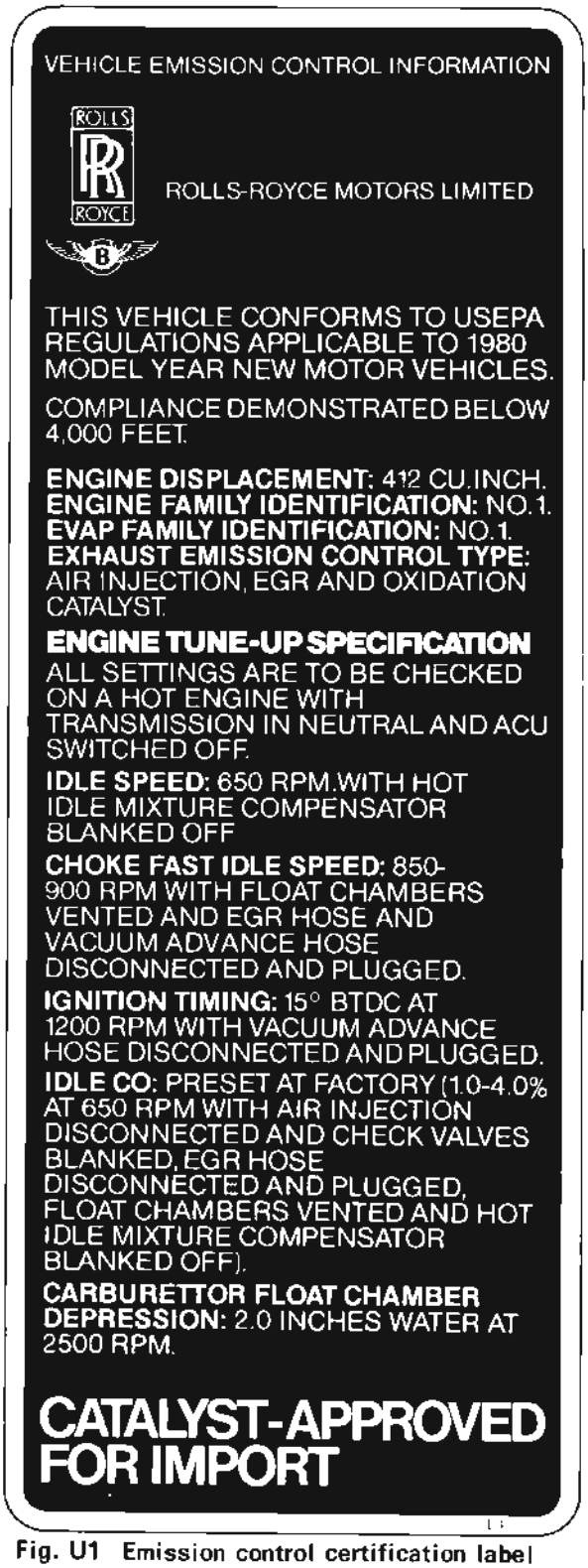

Fig. U1 Emission control certification label

Identification

This Chapter has been written specifically for cars fitted with Emission Control Systems conforming to the North American regulations (except California) applicable to 1980 model year new motor vehicles.

It is important therefore that Service Personnel fully understand the contents of this Chapter so that the special servicing can be correctly carried out.

Rolls-Royce and Bentley motor cars conforming to the above regulations and produced to the 1980 model year specification can be readily identified as follows.

1. **Car Serial Number**

A letter L as the last prefix letter of the Car Serial Number (e.g. SRL or LRL, etc.).

2. **Emission Control Certification Label**

A 1980 Emission Control Certification Label (similar to Figure U1) located on top of the automatic air conditioning system heater box, inside the engine compartment.

Engine compartment

Figures U2 and U3 overleaf show the location of the major emission control system components within the engine compartment.

Hose routing diagram

Figure U4 within the Introduction section gives details of the various hose 'runs' and connections in and around the engine compartment, that are associated with the emission control systems components.

Torque tightening

When fitting the various emission control systems components, ensure that the securing nuts and set-screws are tightened to the torque figures given in Chapter P, unless otherwise stated in this Chapter.



Fig. U2 Engine compartment details (L.H. side)

1 Air pump
2 Connection block and relief valve
3 Check valves
4 'A' bank air manifold
5 Weakening and E.G.R. systems cut-out switch

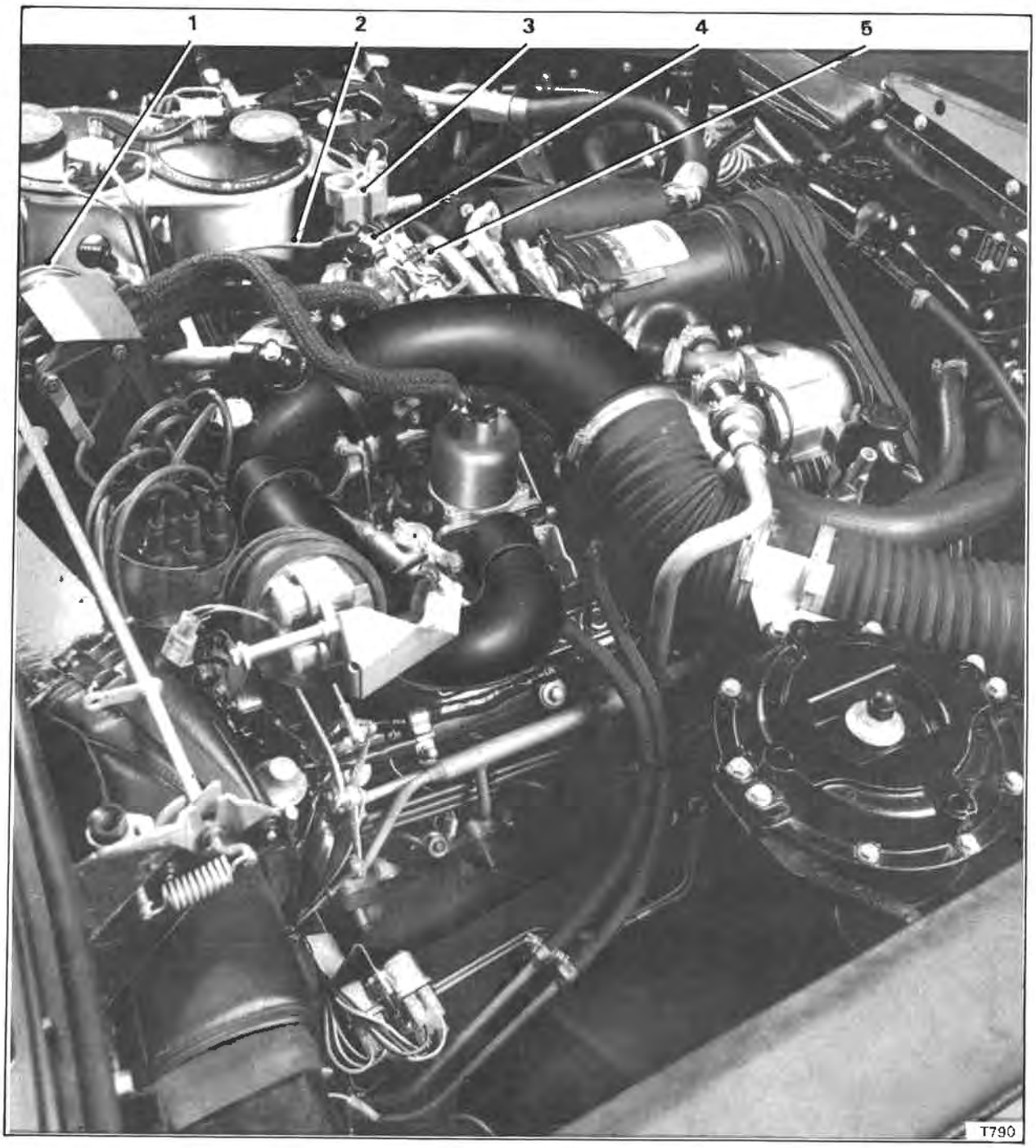

Fig. U3 Engine compartment details (R.H. side)
1 Exhaust gas recirculation valve
2 E.G.R. signal hose
3 Weakening device assembly
4 Weakening and E.G.R. systems cut-off solenoid
5 Anti 'run-on' solenoid

Printed in England
© Rolls-Royce Motors Limited 1980

January 1980
T.S.D. 4200
(U.S.A. & Canada 1980 model year except California)

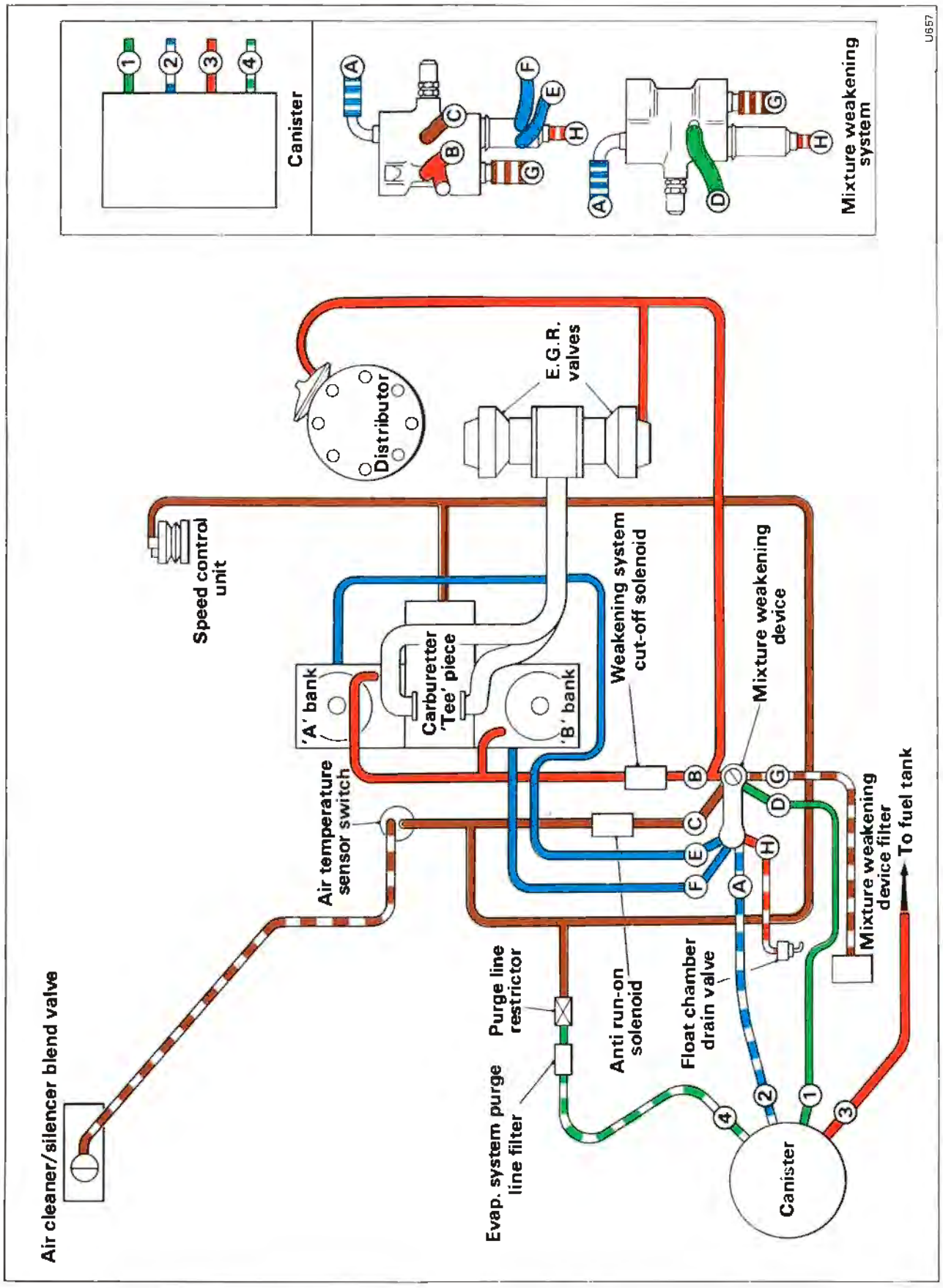

Fig. U4 Hose routing diagram - 1980 model year cars

Section U2

Exhaust emission control system

The Exhaust Emission Control System is designed to reduce the carbon monoxide, unburnt hydrocarbon and oxides of nitrogen content in the exhaust gases.

This system does not eliminate the danger caused by inhaling exhaust gases in a confined area.

Air from the atmosphere is drawn into the engine driven air injection pump through a centrifugal filter. From the pump, a quantity of air proportional to engine speed passes via a three-way connection block (containing a relief valve), through check valves to the air manifolds and then into the exhaust ports. This air combines with the exhaust gases discharged from the combustion chambers and promotes the oxidation process in the exhaust system and catalytic converters. The gases then pass through the exhaust system to atmosphere.

In addition, a proportion of the exhaust gas from the exhaust balance pipe situated between the two downtake pipes, is recirculated through a vacuum operated metering valve into the carburetter 'tee' piece, just downstream of the throttle plates. The recirculated exhaust gas mixes with the inlet charge of fuel/air mixture in the induction manifold and is distributed to the cylinders, lowering the peak combustion temperature and reducing oxides of nitrogen emissions.

Before commencing work on the exhaust emission control system, care should be taken to ensure that the relevant components are not hot.

The system is illustrated in Figure U5 and comprises the following main components

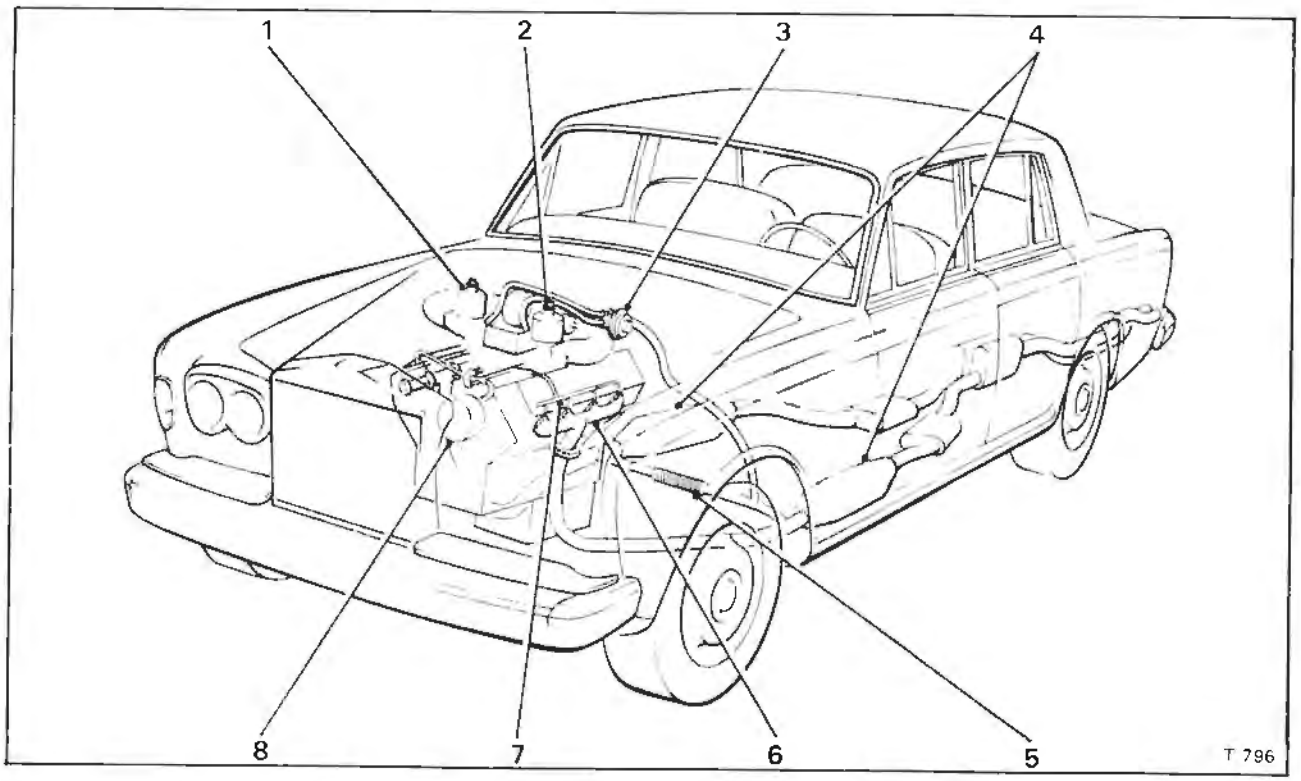

Fig. U5 Exhaust emission control system

1 'A' bank carburetter
2 'B' bank carburetter
3 Exhaust gas recirculation valve
4 Catalytic converters
5 Exhaust system balance pipe
6 'B' bank exhaust manifold
7 'B' bank air manifold
8 Air pump

Printed in England
© Rolls-Royce Motors Limited 1980

January 1980
T.S.D. 4200
(U.S.A. & Canada 1980 model year except California)

Air injection system (see Fig. U6)
Air manifolds
Air pump
Check valves
Centrifugal air filter
Pressure relief valve
Three-way connection block

Exhaust gas recirculation system (E.G.R.) (see Fig. U9)
Cut-off solenoid (see Section U7)
Cut-out switch (see Section U7)
Distribution pipes
E.G.R. valve
E.G.R. valve heatshield
Feed pipe
Full throttle cut-out micro-switch (see Section U7)

Oxidation catalyst system (see Figs. U5 and U13)
Catalytic converters
(For the remainder of the Exhaust system refer to Chapter Q).

For details of the servicing and maintenance requirements of the Exhaust Emission Control System, refer to the Service Schedules Manual - T.S.D. 4117

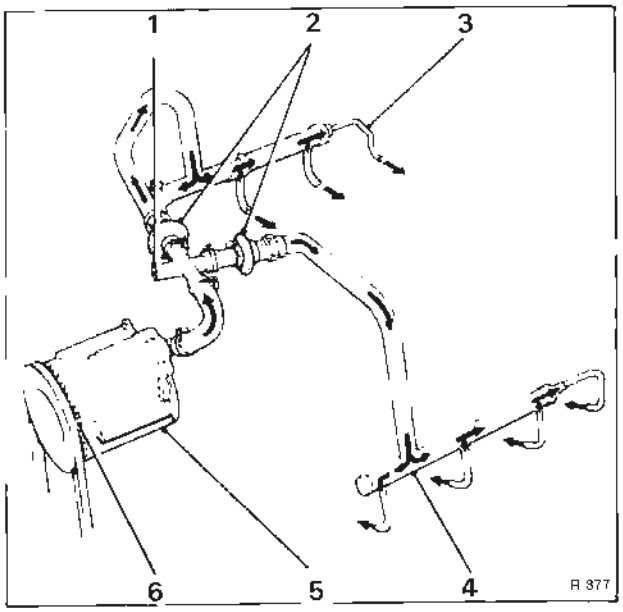

Fig. U6 Air injection system
1 Relief valve
2 Check valves
3 'A' bank air manifold
4 'B' bank air manifold
5 Air pump
6 Air pump intake

Air injection system (see Figs. U5 and U6)
A detailed description of the air injection system is given at the beginning of this section.

Air injection system - To test
1. Connect an electric impulse tachometer to the engine in accordance with the manufacturer's instructions.
2. Start and run the engine at a constant speed of 2 000 r.p.m., check that air does not escape from the relief valve.
3. If air does escape during Operation 2, check that the correct (blue) setting plug is fitted to the pressure relief valve.
4. If the system does not operate as described in Operation 2, stop the engine and fit a new three-way connection block assembly (containing the pressure relief valve).
5. Repeat Operation 2.
6. Stop the engine and remove the test equipment.

Air injection system - Leak check
Check the air injection system for air leaks by carrying out the following sequence of operations.
1. Ensure that the ignition is switched off.
2. Visually inspect the condition of all hoses, pipes and joints associated with the air injection system.
3. Ensure that all worm drive clips are tight.
4. Start the engine and listen carefully for any evidence of an air leak from the system.
5. If an air leak is suspected it is permissible to coat the component or hose with a soap solution, soap bubbles will confirm an air leak.

Air injection system - Fault diagnosis
To diagnose malfunctioning of the air injection system refer to Section U8 - Fault diagnosis of this Chapter.

Air manifolds
The air manifolds convey air from the check valves to the engine exhaust ports. One air manifold is fitted to each bank of cylinders and is identified as 'A' bank air manifold or 'B' bank air manifold.

To remove an air manifold, unscrew the check valve union and the four ¾ in. A/F adapters in the cylinder head.

The 'A' bank air manifold is reasonably straight forward to withdraw but 'B' bank air manifold will require the disconnecting of several other hoses and pipes (e.g. choke stove pipes, fuel evaporative weakening device hoses and pipes, etc.), to facilitate withdrawal.

Fit the air manifolds by reversing the procedure given for removal, noting that the check valve union has a tapered thread. All the adapters in the cylinder head should be torque tightened to the figures given in Chapter P.

Air pump

The air pump is of the rotary vane type and is belt driven from the engine coolant pump. The centrifugal air filter is an integral part of the pump and is situated between the pump body and the pump driving pulley.

Air pump - To remove (see Fig. U7)

1. Disconnect the battery (refer to Chapter M).
2. Unscrew the worm drive clip and detach the hose from the pump to the three-way connection block, at the pump. Blank off the hose and pump connections to prevent the ingress of dirt, etc.
3. Slacken the two setscrews on the drive belt adjustment strut, remove the upper bolt.
4. Remove the drive belt from the pulley.
5. Support the air injection pump and unscrew and remove the mounting setscrew situated on the opposite side of the pump pulley.

Air pump - To fit

Fit the air pump by reversing the procedure for removal noting the following.

1. Ensure that the driving belt is adjusted so that an applied force of 5.5 kg (12 lb) mid-way between the air injection pump pulley and the coolant pump pulley causes the belt to deflect 9,5 mm (0.375 in.)

Air pump pulley

1. To remove, unscrew and remove the three set-screws situated around the centre of the pulley. Withdraw the pulley.
2. To fit the pulley, reverse the procedure given for removal ensuring that the setscrews are torque tightened to the correct figure (see Chapter P).

Check valves

The check valves are non-return valves (one-way valves) and one is fitted into the air injection system between the air pump and the air manifolds, for each bank of cylinders.

The check valves prevent the backflow of exhaust gases into the air lines or air pump, they operate whenever the exhaust back pressure exceeds the air pump delivery pressure at high speed and or in the case of air pump drive belt failure.

To remove a check valve, slacken the worm drive clip situated on the air pump to check valve hose. Unscrew the union from the air manifold and withdraw the check valve. Fit a check valve in the reverse order.

Pressure relief valve (see Figs. U6 and U8)

The spring loaded pressure relief valve is permanently housed within the three-way connection block, its function is to allow excess air to escape from the air injection system when the check valves are closed. The relief valve prevents damage to the pump vanes and excess exhaust temperatures under extreme operating conditions.

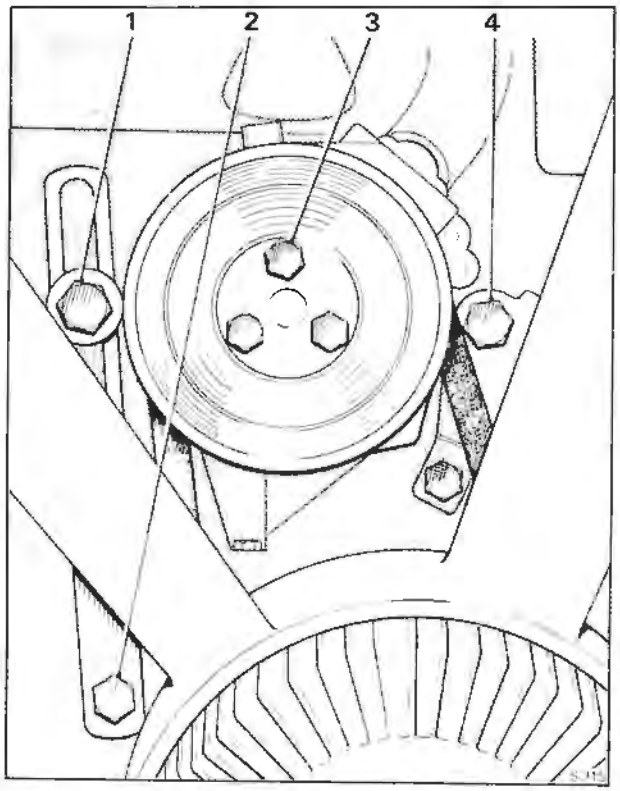

Fig. U7 Air injection pump

1 Adjustment strut upper setscrew
2 Adjustment strut pivot setscrew
3 Pulley retaining setscrews
4 Air pump mounting setscrew

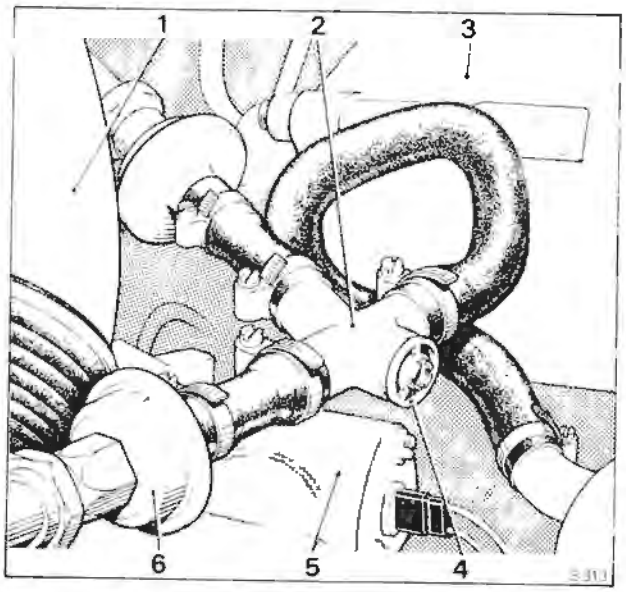

Fig. U8 Three-way connection block

1 Carburetter air intake
2 Three-way connection block
3 Refrigeration compressor
4 Air injection system pressure relief valve
5 Thermostat elbow
6 Check valve

Printed in England

© Rolls-Royce Motors Limited 1980

January 1980

T.S.D. 4200
(U.S.A. & Canada 1980 model year except California)

If it becomes necessary to remove the pressure relief valve three-way connection block, slacken the worm drive clips on the three connecting hoses and withdraw the assembly.

To test the pressure relief valve, blank off the two connections for the check valves and apply pressure to the connection from the pump; ensure that the relief valve operates within the following acceptable limits.
0,5 kg/sq.cm. to 0,6 kg/sq.cm.
(7.4 lb/sq.in. to 8.4 lb/sq.in.)

Exhaust gas recirculation system (E.G.R.)

(see Figs. U5 and U9)
A detailed description of the exhaust gas recirculation system (E.G.R.) is given at the begining of this section.

Distribution pipes
The distribution pipes convey the recirculated exhaust gas from the E.G.R. valve into the carburetter 'tee' piece.

Distribution pipes - To remove
1. Using a 7/16 in. A/F spanner unscrew and remove the two nuts and washers securing the distribution pipes to the E.G.R. valve mounting block.
2. Unscrew the 7/16 in. A/F setscrews retaining the heatshield to 'B' bank air horn; collect the washers.
3. Ease the mounting block rearward to free the joint face; discard the gasket.
4. Support the weight of the distribution pipes.
5. Unscrew and remove the four 2 B.A. setscrews and washers securing the two distribution pipe flanges to the carburetter 'tee' piece.
6. Withdraw the distribution pipes and discard the gaskets.

Distribution pipes - To fit
Fit the distribution pipes by reversing the procedure given for removal, noting the following points.
1. Ensure that all joint faces are clean and free from carbon deposits.
2. Coat the joint faces and gaskets at the carburetter 'tee' piece with 'Wellseal'.

Distribution pipes - To clean
1. Remove the distribution pipes as described in Distribution pipes - To remove.
2. With a pointed scraper clean as much carbon deposit as possible from inside the distribution pipes and the joint faces.
3. Using wire brushes complete the cleaning operation on the distribution pipes.
4. With a pointed scraper remove the carbon

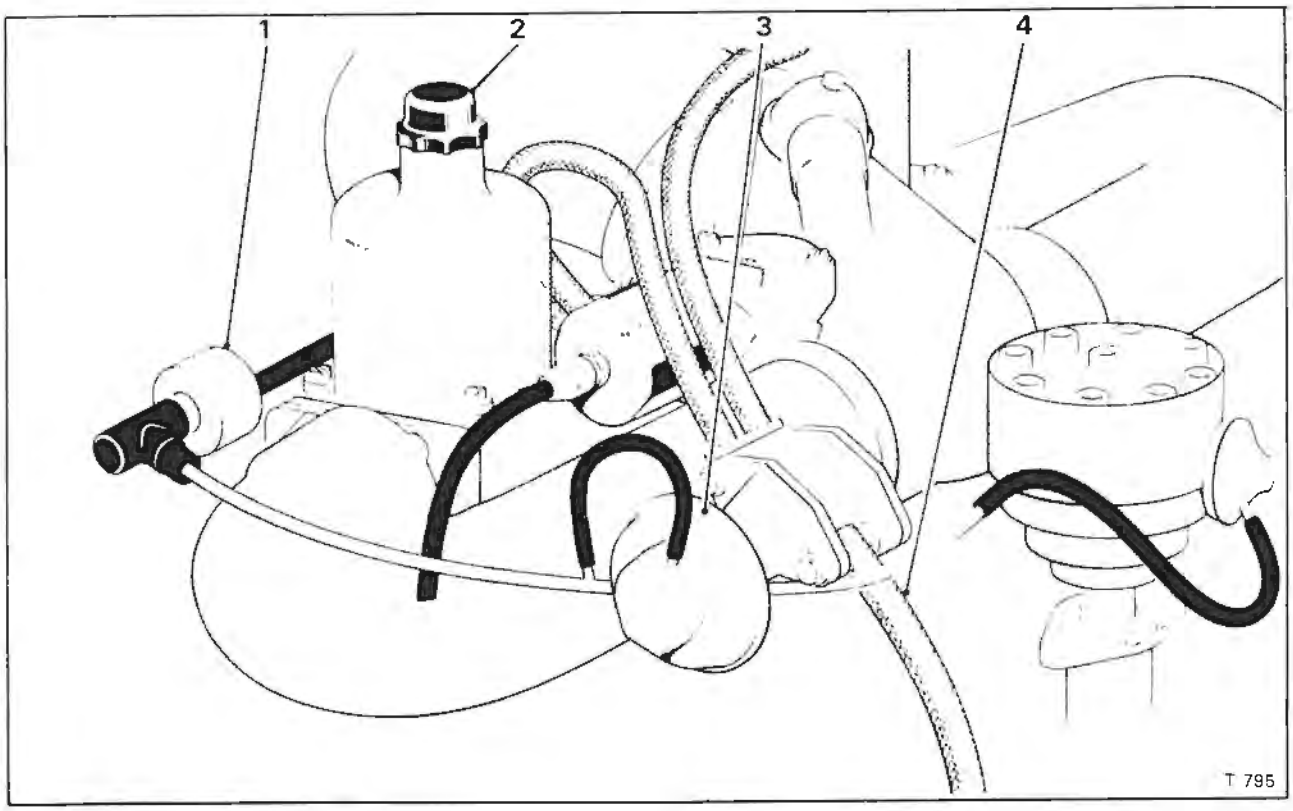

Fig. U9 Exhaust gas recirculation system
1 Weakening device and E.G.R. cut-out solenoid
2 'B' bank carburetter
3 E.G.R. valve
4 E.G.R. feed pipe

deposits from the carburetter 'tee' piece connection orifices.

5. Before fitting the distribution pipes thoroughly blow-out the pipes and carburetter 'tee' piece connections with compressed air.

6. Fit the distribution pipes as described in Distribution pipes - To fit.

E.G.R. valve (see Figs. U10 and U11)

A proportional flow recirculation system is used. Exhaust gas from the balance pipe between the two downtakes of the dual exhaust system passes through a metering orifice and is recirculated into the carburetter 'tee' piece. Atmospheric pressure is maintained downstream of the metering orifice by means of the control valve so that the recirculation flow is proportional to the relative effective areas of the metering orifice and the main exhaust system.

Dilution of the inlet charge with exhaust gas lowers the peak combustion temperature and reduces the formation of oxides of nitrogen.

A vacuum operated control valve with integral pressure transducer is used and the metering orifice is incorporated in an extension of the valve seat. A carburetter throttle gated vacuum signal is used to operate the valve. This signal is modulated by the integral transducer valve and applied to the control valve diaphragm so that the control valve lift is adjusted to maintain a constant control pressure, just above atmospheric pressure between the metering orifice and the control valve seat.

When the engine load is increased, the control pressure exceeds the transducer valve setting and the transducer valve closes applying the full vacuum signal to the control valve diaphragm and thus opening the control valve and increasing the E.G.R. flow. Similarly, as the engine load is reduced, the control pressure becomes less than the transducer valve setting and the transducer valve opens, venting the diaphragm chamber to atmosphere and causing the control valve to close and reduce the E.G.R. flow. The transducer valve constantly cycles adjusting the control valve lift to maintain a constant control pressure under all normal operation conditions.

The use of a throttle gated vacuum signal ensures complete control valve closure at idle to maintain good idle quality.

To improve starting and drive-away under low temperature conditions a solenoid valve (see Section U7) interrupts the carburetter vacuum signal to the E.G.R. valve until a predetermined air intake temperature is reached.

A micro-switch operated by the accelerator pedal (see Section U7) also controls this solenoid to provide E.G.R. cut-out at full throttle. At high engine speed the exhaust gas back pressure is high. As a result, the integral transducer valve directs full carburetter vacuum signal to the control valve. At high engine speed under full throttle

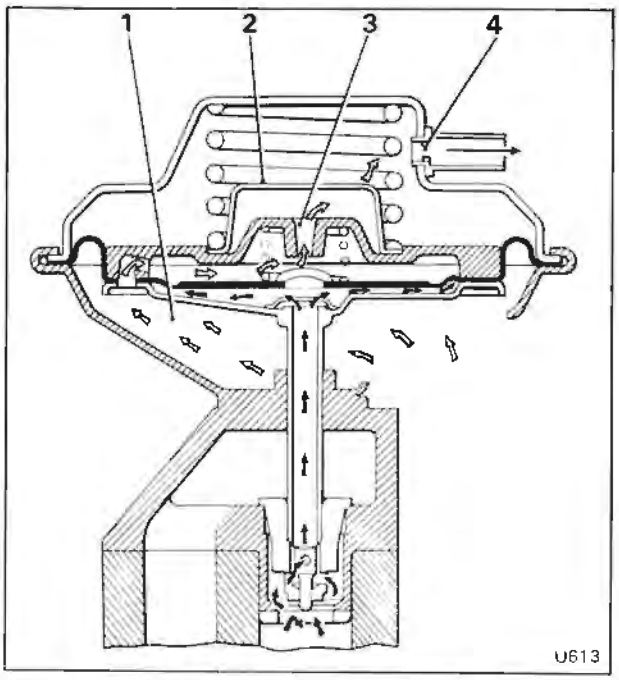

Fig. U10 Exhaust gas recirculation valve
Exhaust pressure below operating value
Ambient air ⇦
Exhaust gas ⬅
1 Ambient air
2 Air filter
3 Air bleed
4 Restrictor

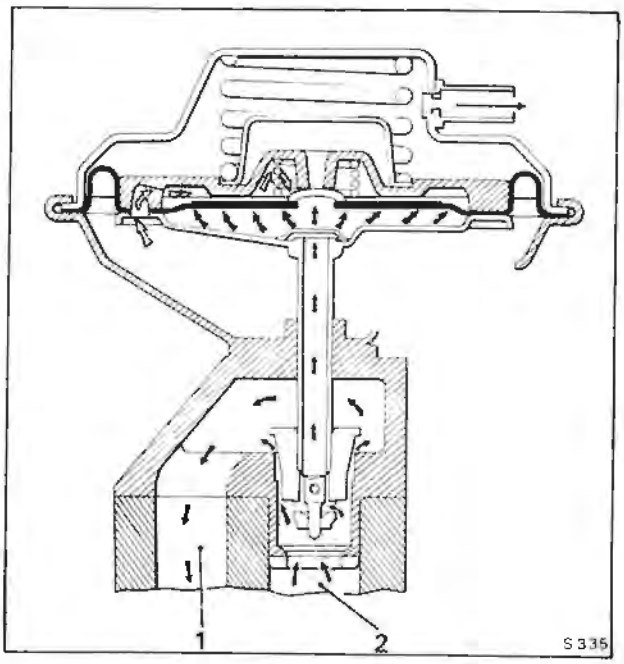

Fig. U11 Exhaust gas recirculation valve
Exhaust pressure above operating value
Ambient air ⇦
Exhaust gas ⬅
1 Exhaust gas to carburetter 'tee' piece
2 Exhaust gas from balance pipe

Printed in England
© Rolls-Royce Motors Limited 1980

January 1980
T.S.D. 4200
(U.S.A. & Canada 1980 model year except California)

operation the air intake restriction is sufficient to produce a carburetter vacuum signal large enough to open the control valve, this results in excessive flow under these conditions which would seriously degrade performance and reduce the safety margin for overtaking.

E.G.R. valve - To remove

1. Detach the small diameter rubber hose from the valve.
2. Unscrew and remove the two ½ in. A/F nuts retaining the valve to the mounting flange; collect the two washers.
3. Withdraw the valve and remove the gasket from the mounting flange.

E.G.R. valve - To fit

Fit the valve by reversing the procedure for removal, noting the following points.

1. Ensure that the valve pintle (see Fig. U10) is secure on the valve stem.
2. Ensure that the valve and mounting flange joint faces are clean and free from carbon deposits.
3. Always use a new mounting flange gasket.

E.G.R. valve - To clean

1. Remove the valve as described in E.G.R. valve - To remove.
2. Using a scraper, remove all carbon film from the valve and mounting flange faces; complete the operation with a wire brush.

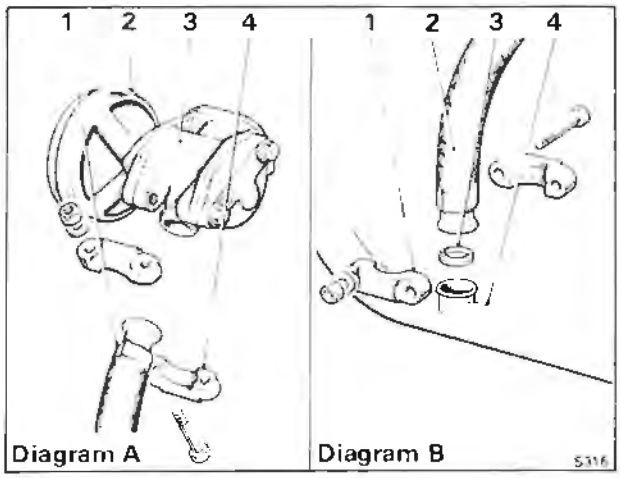

Fig. U12 E.G.R. feed pipe joints

Diagram A - Upper joint

1 Feed pipe
2 E.G.R. valve
3 E.G.R. valve mounting block
4 Clamp bracket

Diagram B - Lower joint

1 Clamp bracket
2 Feed pipe
3 Sealing ring
4 Exhaust balance pipe

3. Clean the carbon from the valve using a wire brush fitted into a portable drill. Take care not to damage the valve seating area.
4. Thoroughly blow out the valve with compressed air to ensure that all loose carbon particles are removed.
5. Upon completion of the cleaning operations, fit the valve to the engine mounting flange as described in E.G.R. valve - To fit.

E.G.R. valve - To check

The E.G.R. system is automatically controlled by exhaust backpressure to maintain a constant E.G.R. proportion over normal road load conditions. Checks to ensure the correct operation of the valve are only required under no load conditions as follows.

1. Connect an electric impulse tachometer to the engine in accordance with the manufacturer's instructions.
2. Ensure that the parking brake is firmly applied and that the gear range selector is in the 'Park' position.
3. Ensure that the pressure tapping cap fitted to the weakening device is correctly tightened.

Start and run the engine until normal operating temperature is attained.

4. Ensure that the engine has run for at least 25 mins. after the engine coolant thermostat has opened.
5. Allow the engine to return to the idle speed.
6. Increase the engine speed slowly noting the operation of the E.G.R. valve.
7. The E.G.R. valve should commence to open between 700 r.p.m. and 1 000 r.p.m.

If the valve either fails to open or opens late check for the following possible causes.

a. Failed E.G.R. cut-out switch (see Section U7).
b. Failed E.G.R. cut-off solenoid (see Section U7).
c. Failed E.G.R. full throttle cut-out micro-switch (see Section U7).
d. Leak or blockage in the carburetter signal pipe to weakening device cut-off solenoid.
e. Leak or blockage in the E.G.R. valve signal pipe or hose from the E.G.R. cut-out solenoid to the E.G.R. valve.
f. Advanced ignition timing (see Section U6).
g. Sealing rings incorrectly fitted (see Catalytic converter - To fit).

If the valve begins to open early check for the following possible cause.

a. Retarded ignition timing (see Section U6).

8. If the E.G.R. valve does not function correctly after carrying out Operations 1 to 7 inclusive, replace the offending valve with a new unit.
9. Carry out Operations 1 to 7 inclusive.

E.G.R. feed pipe

The E.G.R. feed pipe conveys exhaust gas that is to be recirculated from the exhaust balance pipe to the exhaust gas recirculation valve.

E.G.R. feed pipe - To remove

1. Unscrew the two 7/16 in. A/F nuts from the clamp at the upper end of the feed pipe (see Fig. U12).
2. Collect the two washers and 'split' the clamp from the spherical joint.
3. Repeat Operations 1 and 2 on the lower joint adjacent to the exhaust system balance pipe. Collect the sealing ring.

E.G.R. feed pipe - To fit

Fit the E.G.R. feed pipe by reversing the procedure given for removal, noting the following.

1. Ensure that the joint faces are clean and free from carbon deposits.

E.G.R. valve heatshield - To remove

1. Slacken the two forward ½ in. A/F nuts one on either side of the mounting flange.
2. Unscrew and remove the two 7/16 in. A/F set-screws retaining the heatshield to the rear of 'B' bank air horn; collect the washers.
3. Ease the assembly forward to release the heatshield slots from the retaining studs.
4. Withdraw the heatshield.

E.G.R. valve heatshield - To fit

Fit the heatshield by reversing the procedure given for removal.

Oxidation catalyst system (see Figs. U5 and U13)

A dual exhaust system is used. The catalytic converters are situated in the forward underfloor area, in place of the conventional front silencers (see Fig. U5).

Each converter contains two catalyst blocks of unequal length and has sufficient volume to perform the dual functions of converter and silencer (see Fig. U13). Two converters are fitted to each car, one for each bank of the engine cylinders.

A platinum group metal catalyst on a ceramic monolith support has been chosen for optimum conversion efficiency and rapid warm-up. Two separate blocks are used to minimise the effect of thermal shock, and these are positioned to give good gas distribution and effective utilisation of the catalyst volume.

The catalyst promotes the reaction between the residual hydrocarbons and carbon monoxide in the exhaust and the secondary air injected into the exhaust ports.

Catalytic converter protection

To protect the catalytic converter from possible damage the following precautions should always be observed.

Unleaded gasoline

Use unleaded gasoline only (91 RON Min.).

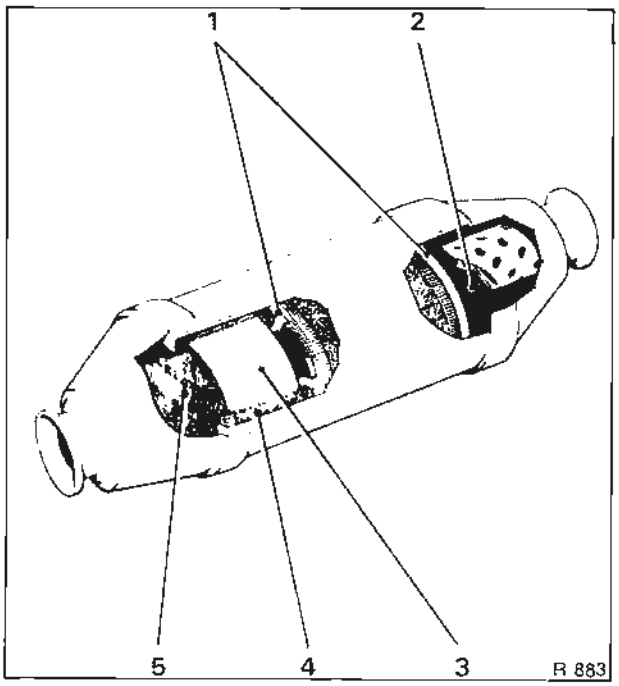

Fig. U13 Catalytic converter assembly

1 Stainless steel mesh retaining rings
2 Silencing chamber
3 Fireclay coating
4 Stainless steel mesh
5 Monolithic catalyst

The use of leaded gasoline will result in a substantial reduction in the performance of the catalyst. Under no circumstances add fuel system cleaning agents to either the fuel tank or carburetters for induction into the engine, as these materials may have a detrimental effect on the catalytic converter.

Fuel

Do not allow the vehicle to run out of fuel. If the vehicle does run out of fuel at a high speed, possible damage to the catalyst could result.

Engine malfunction

If the engine misfires or suffers from a lack of power which could be attributed to a malfunction of either the ignition or fuel systems, the vehicle should be driven only at low speed and the fault rectified as soon as possible. Driving at high speeds with a malfunction in either of these systems could cause overheating and consequent damage to the catalyst.

Printed in England

© Rolls-Royce Motors Limited 1980

January 1980

T.S.D. 4200
(U.S.A. & Canada 1980 model year except California)

Catalytic converter - To remove

1. Remove the screws retaining the relevant section(s) of the grass-fire shields below the catalytic converter.

Note

Take care when removing the shields as the sharp edges could cause injury to the operators hands.

2. Using a $^{9}/_{16}$ in. A/F spanner, slacken the nuts on the spherical joint clamps immediately to the front and rear of the catalytic converter.
3. Support the weight of the catalytic converter and remove the nuts from the spherical joint clamps. Dismantle and remove the clamps.
4. Withdraw the catalytic converter and collect the spherical sealing rings from between the pipe connections.

Catalytic converter - To fit

Fit a catalytic converter by reversing the procedure given for removal, noting the following.

1. The seal rings and pipe flares must be thoroughly clean and free from scale and may be lightly dressed with fine emery cloth if required.
2. The clamp bolt threads should be lightly oiled to prevent binding during assembly and the spherical faces of the sealing rings and the grooves in the clamps should be smeared with a graphite lubricant, to ensure correct alignment of the pieces upon assembly.
3. Fit the catalytic converter assembly complete with seal rings, then loosely fit the joint clamps.

Note

The catalytic converter assembly should be fitted with the square shaped catalyst cells (visible when looking along the short pipe into the catalytic converter assembly) towards the front of the vehicle and the perforated tube (visible when looking along the short pipe into the catalytic converter assembly) towards the rear of vehicle.

The sealing rings should be fitted between the pipe connections so that the sealing ring with the smaller diameter hole in the centre is fitted to the rear of the catalytic converter assembly.

Section U3

Fuel evaporative emission control system

The Fuel Evaporative Emission Control System eliminates direct venting of the fuel system, thus preventing the release of unburnt hydrocarbons into the atmosphere.

Vapour from the fuel system is collected and stored in a charcoal filled canister. The canister is purged whenever the engine is running and the stored fuel vapour is extracted from the charcoal and burnt in the engine.

The system is illustrated in Figure U14 and comprises the following main components.

Canister (see Fig. U15)
Carbon granules (charcoal)
Float chamber connection
Fuel tank connection
Polyurethane air filter
Purge line connection
Weakening device connection

Fuel tank (see Fig. U17)
Expansion tank
Filler cap (combined pressure/vacuum relief valve)
Rollover valve

Purge line (see Fig. U14)
Air filter
Restrictor

Weakening device (see Figs. U19 and U20)
Adjustable orifice
Air filter
Anti 'run-on' solenoid
Cut-off solenoid
Cut-out switch
Float chamber drain valve
Float chamber vent valve
Fuel receiver chamber
Non-return valves
Venturi chamber

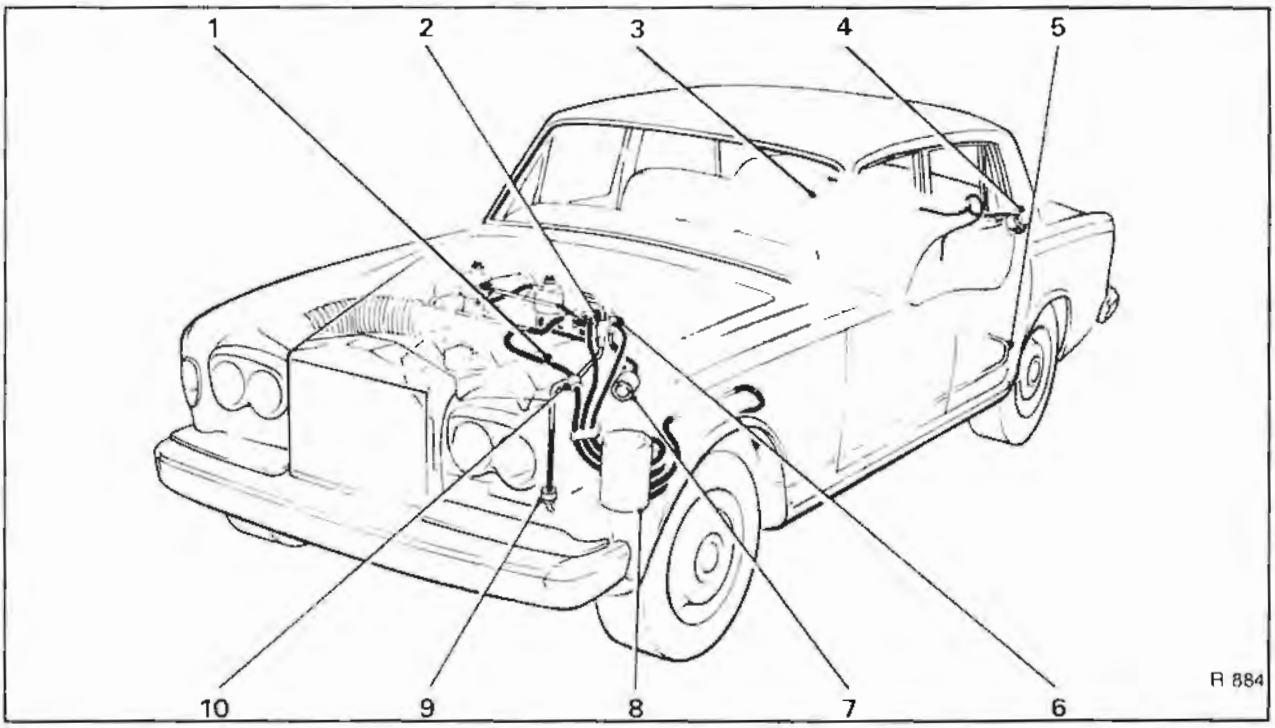

Fig. U14 Fuel evaporative emission control system

1 Purge line restrictor
2 Float chamber vent valve
3 Fuel tank
4 Fuel filler
5 Fuel vapour line
6 Weakening device
7 Weakening device filter
8 Evaporative loss control canister
9 Float chamber drain valve
10 Purge line filter

Printed in England
© Rolls-Royce Motors Limited 1980
January 1980
T.S.D. 4200
(U.S.A. & Canada 1980 model year
except California)

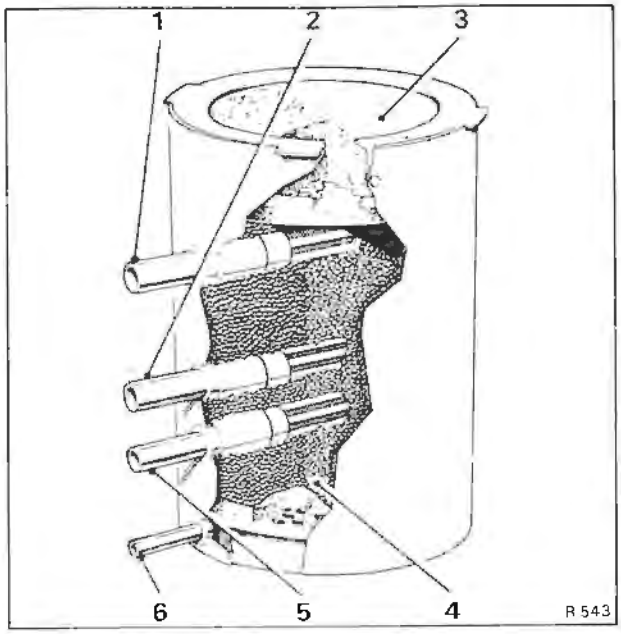

Fig. U15 Control canister
1 Weakening device connection
2 Float chamber vent connection
3 Polyurethane filter
4 Carbon
5 Fuel tank vent connection
6 Purge line connection

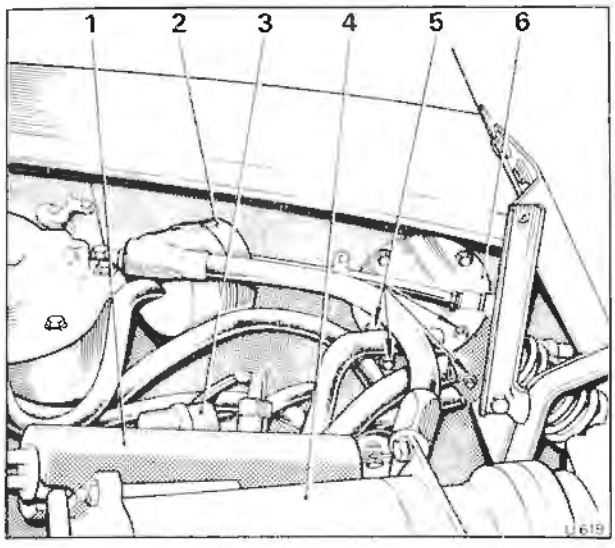

Fig. U16 Foam filter access cover, purge line filter and weakening device filter
1 Fuel cooler
2 Weakening device filter
3 Purge line filter
4 Refrigeration compressor
5 Canister securing setscrews
6 Foam filter access cover

For details of the servicing and maintenance requirements of the Fuel Evaporative Emission Control System refer to the Service Schedules Manual - T.S.D. 4117.

Control canister (see Figs. U14 and U15)

The evaporative emission control canister is situated under the left-hand front wing. It is a cylindrical container filled with activated carbon granules which absorb and retain fuel vapour. There are connections for the mixture weakening device vent, the fuel receiver vent, the fuel tank vent and the purge line. The top of the canister is open to atmosphere and contains a Polyurethene foam filter element.

When the engine is running, air is drawn from the atmosphere through the foam filter elemant and carbon granules to the lowest connection on the canister. The air, containing fuel vapour from the carbon granules then passes into the engine via the purge line.

Control canister - To remove

1. Remove the front left-hand road wheel as described in Chapter R

Note
Left-hand is determined when viewed from the driver's seat.

2. Remove the front section of the underwing sheet by unscrewing the small screws situated around the outer edge of the sheet. Resistance may be experienced when the sheet is being freed, as it is sealed around the edge with Bostik Seelastic.
3. The canister will be clearly visible towards the front of the vehicle.
4. Using the special pliers (RH 8090), remove the steel retaining clips from the four hose connections to the canister. Label the hoses to facilitate identification and withdraw the four hoses from the canister.
5. Raise the bonnet and from inside the engine compartment locate the canister foam filter access cover (see Fig. U16).
6. Unscrew and remove the four setscrews indicated as securing setscrews in Figure U16. Before removing the final setscrew support the control canister.
7. Withdraw the canister from beneath the wing.

Control canister - To fit

Fit the canister by reversing the procedure described for removal, noting the following points.

1. Ensure that the rubber hoses are in a good condition and new hose retaining clips are fitted.
2. Ensure that the underwing sheet is sealed with Bostik Seelastic.

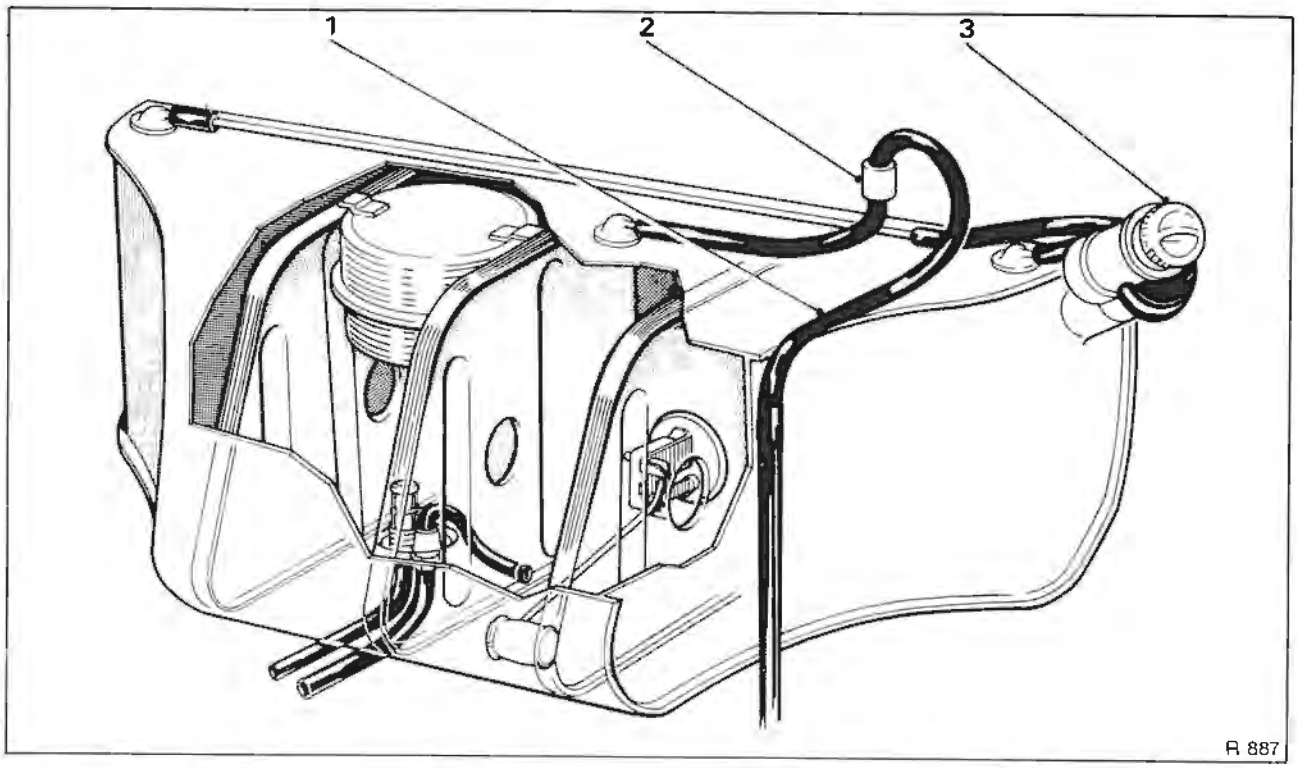

Fig. U17 Fuel tank

1 Fuel vapour line
2 Rollover valve
3 Fuel filler cap (incorporating combined pressure and vacuum relief valve)

Polyurethane foam filter element - To renew

It is not necessary to remove the canister from the car in order to extract the polyurethane foam filter element A detachable cover is situated in the left-hand valance (see Fig. U16).

1. Unscrew the four screws retaining the access cover, lift off the cover and withdraw the filter element from the top of the canister.

When fitting a new element, ensure that it is correctly positioned inside the retaining rim of the canister. Fit the access cover and tighten the setscrews.

Fuel tank (see Fig. U17)

The fuel tank is fitted at the forward end of the luggage compartment behind the carpet covered sealing panel.

The fuel tank is vented via two connections to the filler neck which allows adequate venting of the tank when it is being filled

A separate vapour line from the fuel tank passes via a rollover valve (situated on the top of the fuel tank), under the floor on the left-hand side of the car to the evaporative loss control canister.

The rollover valve prevents fuel from entering the evaporative emission control canister during harsh manoeuvres or in the event of vehicle inversion. Fuel vapour passes freely through the valve.

In the event of a blockage in the vapour line to the evaporative loss control canister, a combined pressure and vacuum relief valve in the fuel filler cap prevents any excessive build-up of pressure due to fuel vapourisation or depression as the fuel is consumed.

An expansion tank situated within the main fuel tank inhibits complete filling and thereby provides fuel expansion volume to cope with extreme temperature conditions.

For all other details of the fuel tank refer to Chapter K.

Fuel evaporative emission control system - To leak check

Whenever the various pipes, hoses and components of the fuel evaporative emission control system are disturbed, the system should be checked for air leaks upon assembly.

To test the system proceed as follows.

1. Position the vehicle on a ramp and carry out the usual safety precautions (i.e. ensure that the gear range selector lever is in 'Park' position, the parking brake firmly applied, the engine switched off, etc.,). Raise the ramp.
2. Remove the left-hand horn assembly (left-hand is decided when standing under the vehicle, looking towards the front), see Chapter M. -

Printed in England
© Rolls-Royce Motors Limited 1980
January 1980
T.S.D. 4200
(U.S.A. & Canada 1980 model year except California)

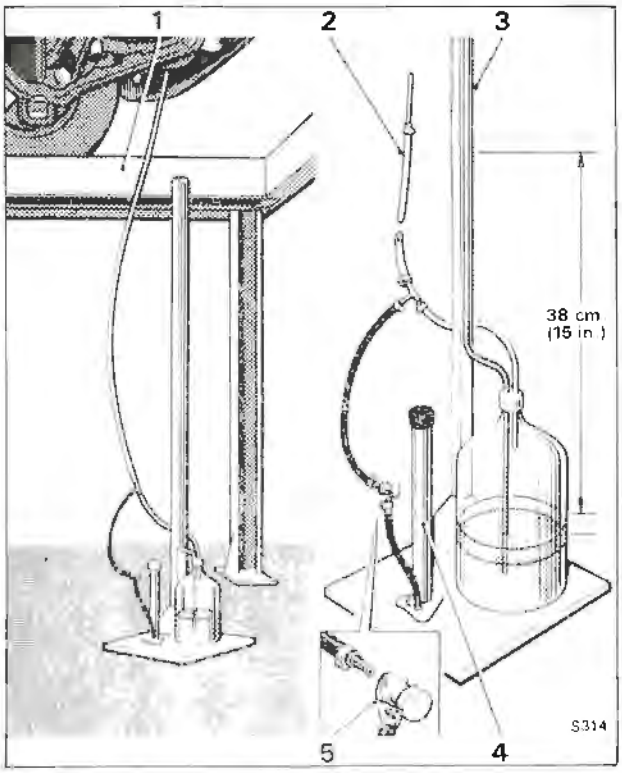

Fig. U18 Leak check test equipment
1 Ramp
2 Connection to fuel tank/canister hose
3 Test equipment
4 Pump
5 One-way pressure valve

3. Through the resultant gap between the front wing and wing sheet, locate the emission control canister and identify the hose connection from the fuel tank (second from the bottom).
4. Using the special pliers (RH 8090), remove the steel retaining clip from the fuel tank connection hose at the control canister.
5. The fuel tank hose should be detached from the canister and connected to the test equipment (see Fig. U18)
6. Apply air pressure to the fuel tank hose via the test equipment until a reading of 38 cm. (15 in.) H_2O is attained and close the pressure supply.
7. After 5 minutes again check the pressure reading, this should not have fallen by more than 12,7 mm. (0.5 in.).
8. If the pressure drop is more than 12,7 mm. (0.5 in.), progressively treat all joints in the system with soap solution to detect air leaks.
9. Rectify any air leaks and again leak check the system.
10. When the system is satisfactory, detach the test equipment and connect the hose to the control canister, secure with a new steel retaining clip.
11. Fit the left-hand horn assembly as described in Chapter M.

Purge line

The purge line consists of a rubber hose, passing from the lowest connection on the canister through the valance junction piece to the induction manifold connection on the opposite side of the engine (see Fig. U14). Incorporated into this hose is the purge line filter and restrictor.

When the engine is running, air drawn through the canister filter and carbon picks up the stored fuel vapours and passes them via the hoses, to the induction system at a point just below the choke housing. The restrictor in the line controls the flow rate at between 1,41 cu.m. per hr. and 1,98 cu.m. per hr. (50 cu.ft. per hr. and 70 cu.ft. per hr.) to maintain carburetter metering accuracy and the paper element line filter is fitted to prevent blockage of the restrictor.

Purge line filter

The purge line filter is situated on the left-hand valance just forward of the front road spring pot (see Fig. U16). The air filter assembly is a sealed unit and no attempt should be made to clean the element.

At the mileage intervals specified in the Service Schedules the purge line filter should be removed and a new assembly fitted as follows.

Purge line filter - To remove

1. Using the special pliers (RH 8090) remove the two steel retaining clips situated one on either side of the filter assembly.
2. Detach the inlet and outlet hoses.
3. Slacken the small setscrew that secures the clamp bracket around the filter assembly.
4. Swivel the clamp bracket to enable the filter assembly to be withdrawn.

Purge line filter - To fit

Fit the purge line filter by reversing the procedure given for removal, noting the following points.
1. Ensure that the filter assembly is fitted the correct way around; the word 'IN' moulded into the end of the casing should be towards the front of the vehicle.
2. Ensure that the rubber hoses are in a good condition and that new hose retaining clips are used

Purge line restrictor

The purge line restrictor is situated in the purge line between the air filter and the induction manifold connection (see Fig. U14). The function of the restrictor is to maintain the air flow through the purge line within predetermined limits.

Purge line restrictor - To remove

1. Hold the restrictor firmly and slide the rubber hosing from both ends.

Purge line restrictor - To fit

Fit the restrictor by reversing the procedure given for removal, noting the following point.

1. Ensure that the purge line restrictor is fitted into the line correctly. This can be determined by comparing the diameters of the restrictor ends with those of the rubber hoses.

Purge flow rate - To check

1. Disconnect the hose from the engine side of the purge line filter and insert a flowmeter assembly (RH 8725) into the line between the filter and the restrictor. The flowmeter is a rotameter type capable of measuring between 1,4 cu.m hr. and 2,0 cu.m/hr. (50 cu.ft/hr. and 70 cu.ft/hr.). The pressure drop across the meter must not exceed 5,08 cm.Hg. (2.0 in.Hg.).

2. Start and run the engine at 650 r.p.m., the reading on the flowmeter should be between 1,41 cu.m/hr. and 1,99 cu.m/hr. (50 cu.ft/hr. and 70 cu.ft/hr.).

3. If the flow is less than the minimum figure quoted in Operation 2, stop the engine and substitute the purge line restrictor with a straight piece of metal pipe having an internal diameter larger than 4,76 mm. (0.187 in.).

4. Start and run the engine at 650 r.p.m.; the reading on the flowmeter should be in excess of 1,99 cu.m/hr. (70 cu.ft/hr.).

5a. If the flowmeter reading is above 1,99 cu.m/hr. (70 cu.ft/hr.) fit a new purge line restrictor and repeat Operation 2.

b. If the flowmeter reading is below 1,99 cu.m/hr. (70 cu.ft/hr.) the cause could be as follows.

(i) An air leak in any of the vacuum hoses that connect to the induction manifold connection (vacuum manifold).

(ii) A blockage in the vacuum manifold or any of the connecting hoses.

Any leaks or blockages should be rectified; the restrictor should be fitted and Operation 2 repeated. If the flow rate is still incorrect fit a new restrictor and again, repeat Operation 2.

6. When the flow rate is correct, detach the flowmeter and refit the hose to the purge line filter.

7. Detach the hose from the purge line filter inlet and suitably connect the flowmeter to the filter assembly inlet connection.

8. Observe the manometer reading with the engine running at 650 r.p.m. If the flow drops below 1,41 cu.m/hr. (50 cu.ft/hr). Check the hoses, pipes, filter and canister until the correct flow is obtained.

9. Remove the test equipment and connect the hose to the purge line filter.

Weakening device

The mixture weakening device (see Fig. U19) is fitted adjacent to 'B' bank carburetter and incorporates a fuel receiver.

For any given position of the fuel metering needle, the rate of the discharge from the carburetters is governed by the difference in air pressure existing over the fuel in the float chamber and that over the jet.

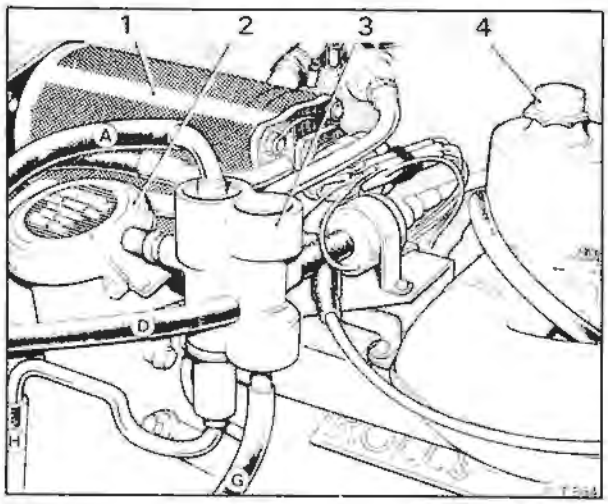

Fig. U19 Position of mixture weakening device

1 Refrigeration compressor
2 Engine oil filler
3 Mixture weakening device
4 'B' bank carburetter

The weakening device is designed to reduce the air pressure (create a depression) in the float chamber at part throttle, thereby reducing the rate of discharge from the jet

The weakening device housing contains two chambers, (see Fig. U20), the venturi chamber, and the fuel receiver chamber, the two being interconnected by a passage and an adjustable venturi.

The venturi chamber is connected to a small drilling on the edge of the butterfly plates of both carburetters via the weakening device solenoid valve, with the throttle slightly open the drillings are subjected to manifold depression thus creating a depression in the venturi chamber which draws air from the weakening device air filter. This depression is also apparent in the fuel receiver chamber and subsequently in the carburetter float chambers.

The value of the depression is set by the position of the weakening device adjusting screw.

To obtain adequate float chamber venting to cope with hot soak conditions there is an additional vent from the fuel receiver. This incorporates a low pressure non-return valve to maintain float chamber depression under normal running conditions. In addition to this valve, a one-way valve is fitted into the venturi chamber to prevent any evaporating fuel being discharged to atmosphere.

A float chamber drain, also incorporating a low pressure non-return valve is mounted at the front of the engine adjacent to the oil filter, this valve is connected to the fuel receiver. Should flooding occur

Printed in England

© Rolls-Royce Motors Limited 1980

January 1980

T.S.D. 4200
(U.S.A. & Canada 1980 model year
except California)

the head of fuel in the receiver is sufficient to open the drain valve thus preventing engine stalling if the float chamber needle valves stick.

Weakening device - To remove
1. Label all hoses connected to the weakening device assembly, this will facilitate assembly.
2. Disconnect all hoses to the weakening device.
3. Unscrew and remove the two small setscrews that retain the weakening device to the solenoid platform; the two screws are situated just below the pipe/hose connections for the anti 'run-on' solenoid and weakening device cut-off solenoid.
4. Withdraw the weakening device.

Weakening device - To fit
Fit the weakening device by reversing the procedure given for removal, noting the following point.
1. Ensure that all hoses connecting to the assembly are in a good condition and that all connections are 'air tight'.

Weakening device - To dismantle (see Fig. U20)
1. Remove the weakening device from the vehicle.
2. Remove the small screw that secures the fuel receiver assembly into the base of the weakening device, withdraw the assembly.
3. Unscrew the weakening device signal cap, collect the cap fibre washer. Unscrew the signal line adapter from the casting and withdraw the aluminium washer from the adapter.
4. Remove the circlip from the top of the fuel receiver chamber, withdraw the float chamber vent pipe (slight resistance may be felt due to the rubber sealing ring). With a soft drift (e.g. wooden pencil), push the float chamber vent valve out of the weakening device assembly (the drift is required because the rubber sealing ring fitted around the vent valve will cause a small resistance)
5. Remove the circlip from the base of the venturi chamber, withdraw the air intake pipe containing a one-way valve (slight resistance may be felt due to the rubber sealing ring).
6. Remove the anti-tamper cover from the top of the venturi chamber, unscrew the lock-nut and using a screwdriver unscrew the adjusting screw.

Weakening device - To assemble
To assemble the weakening device, reverse the procedure given for removal, noting the following.
1. Ensure that all components are clean before assembly
2. Ensure that the rubber sealing rings are in a good condition and lightly smeared with the minimum amount of grease. Ensure that no grease is applied to the valves otherwise a malfunction may occur due to the grease making the valves stick.
3. After assembly, the operator should check that he can blow but not suck on the metal pipes, one on top of the fuel receiver chamber and the other at the bottom of the venturi chamber.

Weakening device signal strength - To check
The float chamber depression should be checked as follows.
1. Start and run the engine until normal setting conditions are attained (i.e. engine cooling system thermostat opened, air conditioning unit switched off, and the automatic choke is off).
2. Stop the engine.
3. Connect an electric impulse tachometer to the engine in accordance with the manufacturer's instructions.
4. Isolate the E.G.R. valve from the weakening system by disconnecting the E.G.R. signal hose from the 'tee' piece located between the weakening system cut-off solenoid and the weakening device. Blank off the 'tee' piece connection.
5. Unscrew and remove the weakening device signal cap and connect a 0 to 15,24 cm. (0 to 6 in.) water manometer to the weakening device adapter.
6. Start and run the engine at 2 000 r.p.m. in 'Park' until a steady manometer reading is obtained, this should be 5,08 cm. (2.0 in.) of water depression.

A low or zero reading may be caused by
a. A blockage in the weakening device venturi to the weakening device cut-off solenoid.
b. A blockage or restriction in the signal pipe(s).
c. An air leak in the hoses or pipes from the float chambers to the emission control canister.
d. Faulty float chamber vent valve or drain valve.
e. Low engine air intake temperature [below 14° C. (57 °F.)] a faulty weakening device solenoid or weakening device switch.

A high reading may be caused by
a. An obstruction in the weakening device bleed orifice (weakening device signal strength adjusting screw).
b. Obstructed weakening device air filter or evaporative loss control canister.
c. Incorrect connection or blockage in the weakening device to either the valance connection or the evaporative loss control canister.
d. Weakening device air intake valve sticking closed.
e. Obstructed weakening device air filter hose.
f. Incorrect operation of anti 'run-on' solenoid.
7. If the float chamber depression is still incorrect after checking through the possible causes in Operation 6, set the weakening device signal strength (float chamber depression) by unlocking and turning the adjusting screw (see Fig. U20) until the correct manometer reading is obtained. Turning the adjusting screw clockwise increases the depression.
8. Remove the blank from the weakening system 'tee' piece and connect the E.G.R. hose.
9. Raise the engine speed slowly noting both the manometer and tachometer readings. The maximum steady manometer reading should be obtained between 1 200 r.p.m. and 1 500 r.p.m.

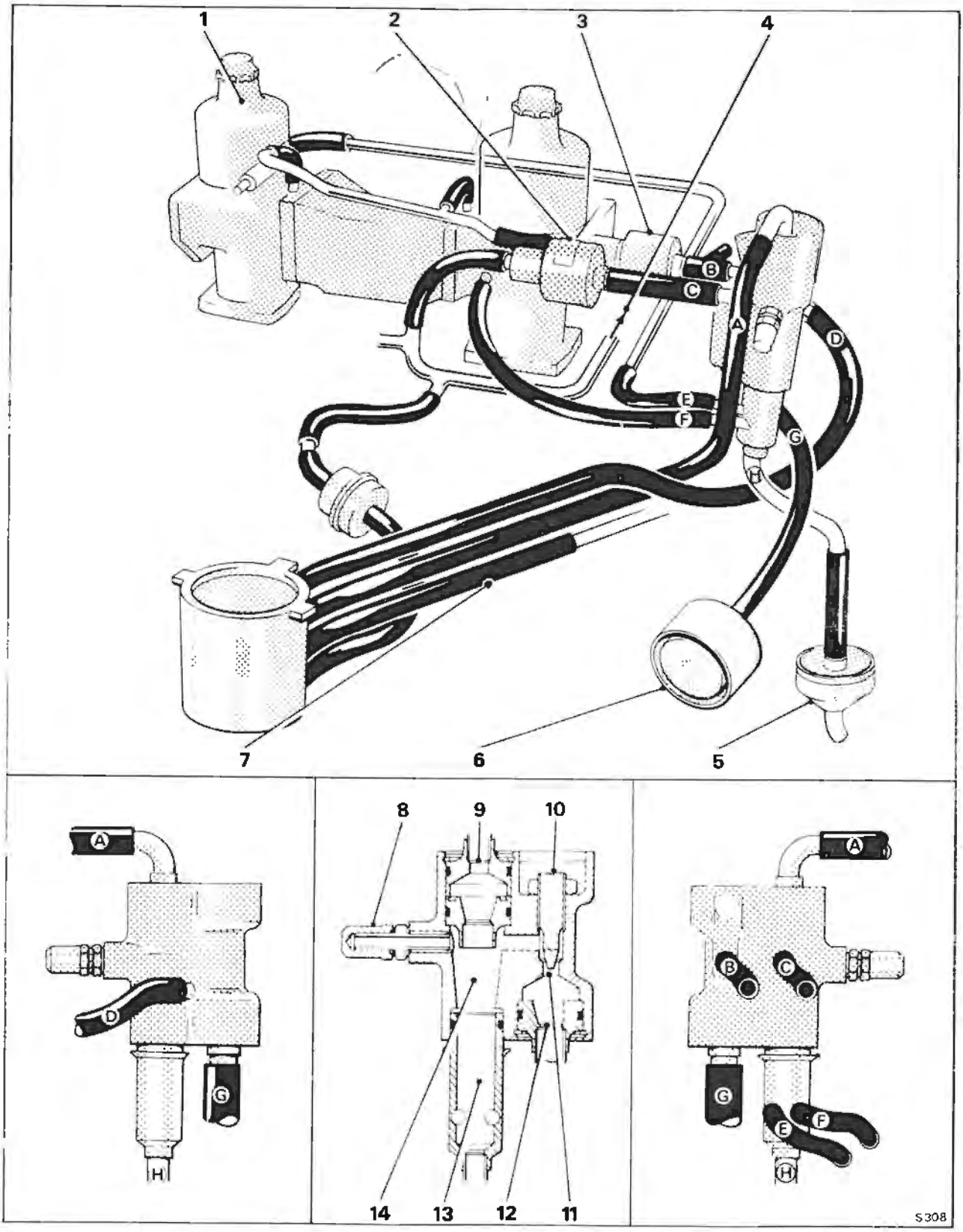

Fig. U20 Mixture weakening device

1 'A' bank carburetter
2 Anti 'run-on' solenoid
3 Weakening and E.G.R. systems cut-off solenoid
4 Induction manifold connection
5 Float chamber drain valve
6 Weakening system air filter
7 Vent from fuel tank
8 Weakening device signal cap
9 Float chamber vent valve
10 Adjusting screw
11 Venturi chamber
12 Air intake valve
13 Fuel receiver
14 Fuel receiver chamber

Printed in England
© Rolls-Royce Motors Limited 1980
January 1980
T.S.D. 4200
(U.S.A. & Canada 1980 model year
except California)

10. Allow the engine speed to return to the idle setting (650 r.p.m.) and check the float chamber depression reading on the manometer.

If the float chamber depression at idle speed is above 10,16 mm. H_2O (0.4 in. H_2O) check the ignition timing at idle as this condition may result in unsatisfactory driveability.

11. Fit the tamperproof cover into the top of the venturi chamber.

Weakening device air filter - To remove

The air filter container is mounted on the left-hand valance just forward of the road spring pot (see Fig. U16).

This is a sealed unit and no attempt should be made to clean the element.

1. To remove the air filter assembly, detach the hose and unscrew the worm drive clip situated around the assembly.

2. Withdraw the assembly.

Weakening device air filter - To fit

Fit the air filter container by reversing the procedure given for removal.

Section U4

Crankcase emission control system

Crankcase emissions are controlled by a recirculatory closed breather system.

An insulated draught tube connects the crankcase via the oil filler which is fitted with a sealed cap, to the choke housing upstream of both the choke butterfly and the carburetters. A flame trap capsule containing three wire mesh discs is fitted in a housing at the crankcase end of the draught tube. Engine emission (blow-by) is drawn into the induction system via the draught tube, due to the depression in the choke housing.

1. The flame trap fitted to the breather pipe should be cleaned in the following manner, at the specified mileage.
2. Unscrew the setscrew securing the breather pipe connection to the oil filler pedestal; withdraw the connection from the pedestal (slight resistance may be felt due to the rubber 'O' ring connections).
3. Withdraw the connection from the pipe flange and collect the restrictor.
4. Wash the flame trap assembly in clean fuel, then dry with a high pressure air line. The flame trap assembly consists of 3 gauzes crimped together as shown in Figure U21.
5. To clean the adapter fitted to the choke housing, remove the single setscrew from the breather pipe end connection and detach the pipe.
6. Clean the adapter fitted to the choke housing and ensure that the holes in the adapter are clear.
7. Assembly of the flame trap and breather pipe is in the reverse order, ensuring that the 'O' rings are in good condition.

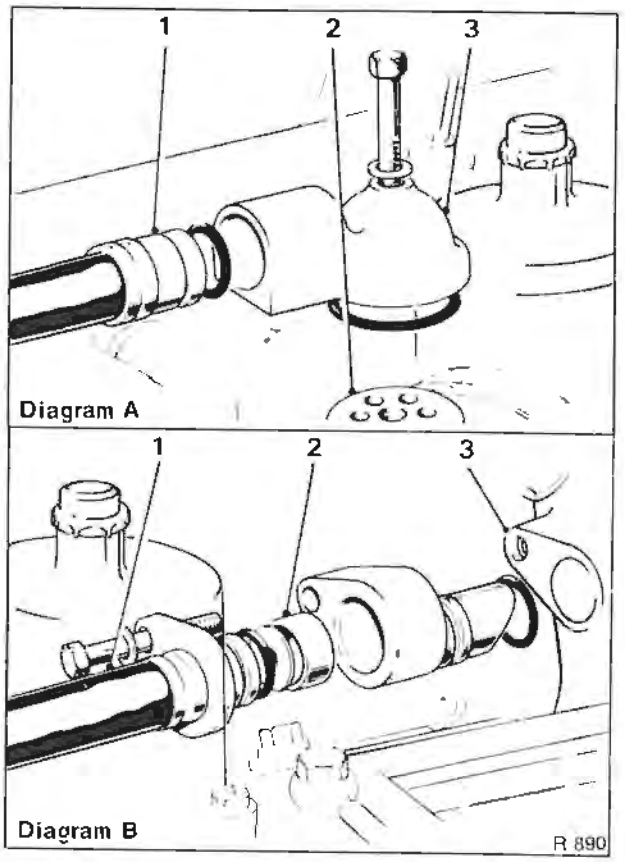

Fig. U21 Crankcase breather pipe connections

Diagram A		Diagram B	
1	Breather tube	1	Breather tube
2	Choke housing	2	Flame trap
3	Breather connection	3	Oil filler housing

Printed in England

© Rolls-Royce Motors Limited 1980

January 1980

T.S.D. 4200
(U.S.A. & Canada 1980 model year except California)

Section U5

Carburetters and Automatic choke system

The Carburetter and Automatic choke system can be seen illustrated in Figure U22 and comprises the following main components

Automatic choke

'Fast-idle'
Stove pipe
(For the remainder of the Automatic choke system refer to Chapter K).

Carburetters (see Fig. U24)

Bi-metal jet lever
Carburetter fuel filter
Carburetter idle airflow balance
Float
Float chamber
Float needle
Jet assembly
Jet needle
Overrun valve
Piston
Piston damper
Piston damper retainer (Piston ball race clip)
Suction chamber
Tamperproof caps
Throttle disc
Throttle linkage
Viscosity compensator

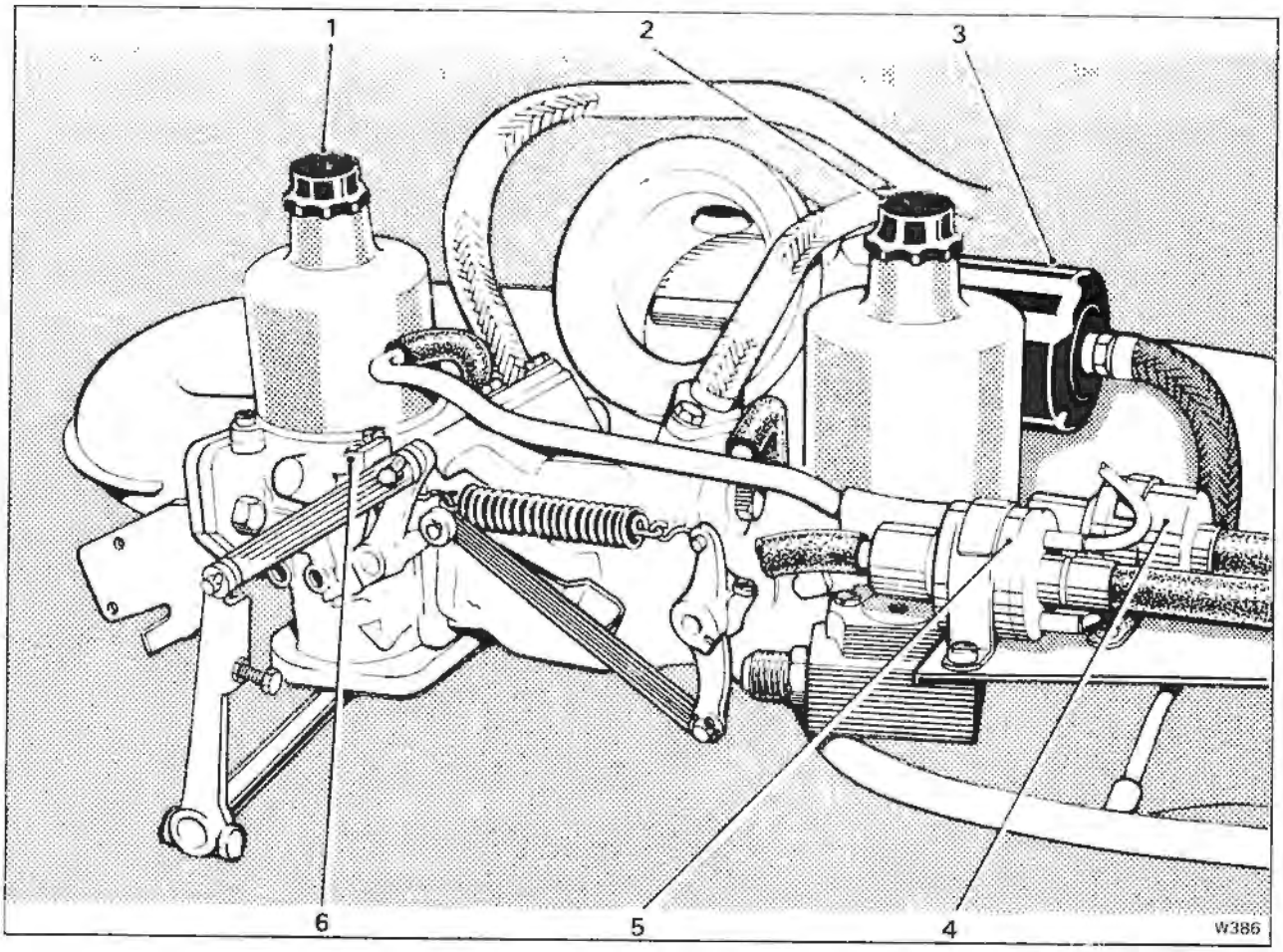

Fig. U22 Carburetters and linkage

1 'A' bank carburetter
2 'B' bank carburetter
3 Choke bi-metal housing
4 Weakening and E.G.R. systems cut-off solenoid
5 Anti 'run-on' solenoid
6 Idle speed adjusting screw

Printed in England

© Rolls-Royce Motors Limited 1980

November 1980

T.S.D. 4200
(U.S.A. & Canada 1980 model year
except California)

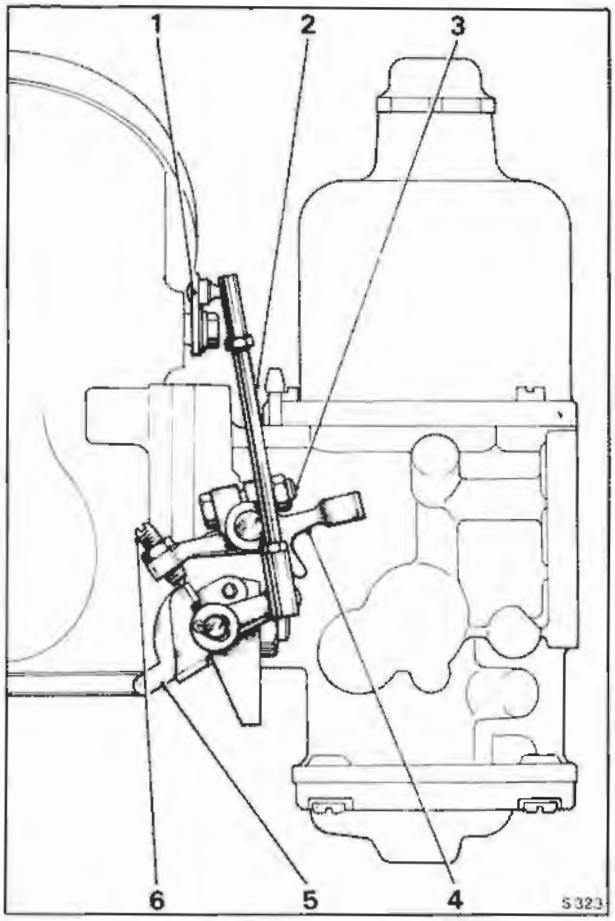

Fig. U23 Fast-idle mechanism
1 Control rod lever
2 Butterfly rod
3 Lever clamp bolt
4 'Fast-idle' lever
5 Cam
6 Adjusting screw

Temperature controlled air intake

Air cleaner/silencer
Air blend valve
Cold air intake
Hot air scoop
Manifold vacuum hose
Resonator
Temperature sensor

Weakening device

(Refer to Section U3).

Automatic choke

All details for the Automatic choke system are given in Chapter K, except for the checking and setting procedures of the following.

'Fast-idle' - To set

1. Ensure that the usual safety precautions are carried out (i.e. parking brake firmly applied, gear range selector lever in 'Park' etc.) and connect an impulse tachometer in accordance with the manufacturer's instructions.
2. Start and run the engine until normal operating temperature is attained.
3. Disconnect the E.G.R. vacuum signal at the pipe from the solenoid 'Y' piece to the E.G.R. valve and blank the 'Y' piece connection.
4. Remove the pressure tapping cap from the weakening device (see Fig. U20).
5. Open the throttles and close the choke butterfly against the bi-metal tension using control rod lever (item 1 - Fig. U23) until the adjusting screw (item 6 - Fig. U23) is resting on the tip of the fast-idle cam. At this point an extra load will be felt due to the action of the extended fast-idle plunger ceasing.
6. Start the engine, if the speed is outside a range of 850 r.p.m. to 900 r.p.m. stop the engine, open the throttles to gain access to the adjusting screw and turn the screw approximately ⅛ turn for each 20 r.p.m. required. Tighten the lock-nut.
7. Start the engine and again check the fast-idle speed.
8. When the engine speed has been adjusted to within the prescribed limits open the throttles to release the fast-idle mechanism.
9. Stop the engine, disconnect the tachometer, remove the blank from the 'Y' piece connection at the cut-off solenoid and fit the E.G.R. signal pipe to the 'Y' piece connection. Fit the pressure tapping cap to the weakening device.

Choke stove pipe - To flow check

1. Ensure that the usual safety precautions are carried out (i.e. parking brake firmly applied, gear range selector lever in 'Park' etc.) and connect an impulse tachometer in accordance with the manufacturer's instructions.
2. Start and run the engine until normal operating temperature is attained. Stop the engine.
3. Disconnect the stove pipe union at the intake elbow (see Fig. U36) and connect a flowmeter to the pipe via a connector (RH 8945). The flowmeter must be a rotameter type capable of measuring 2,9 cu.m/hr. (100 cu.ft/hr.).
4. Start and run the engine at idle speed (650 r.p.m.); observe the flowmeter, a correct reading is between 1,41 cu.m/hr. and 1,55 cu.m/hr. (50 cu.ft/hr. and 55 cu.ft/hr.).
5. If the flow is less than 1,41 cu.m/hr. (50 cu.ft/hr.) check the choke stove pipe unions for leaks.
6. If the flow is in excess of 1,55 cu.m/hr. (55 cu.ft/hr.), fit a new restrictor in the choke bi-metal housing (see Chapter K).

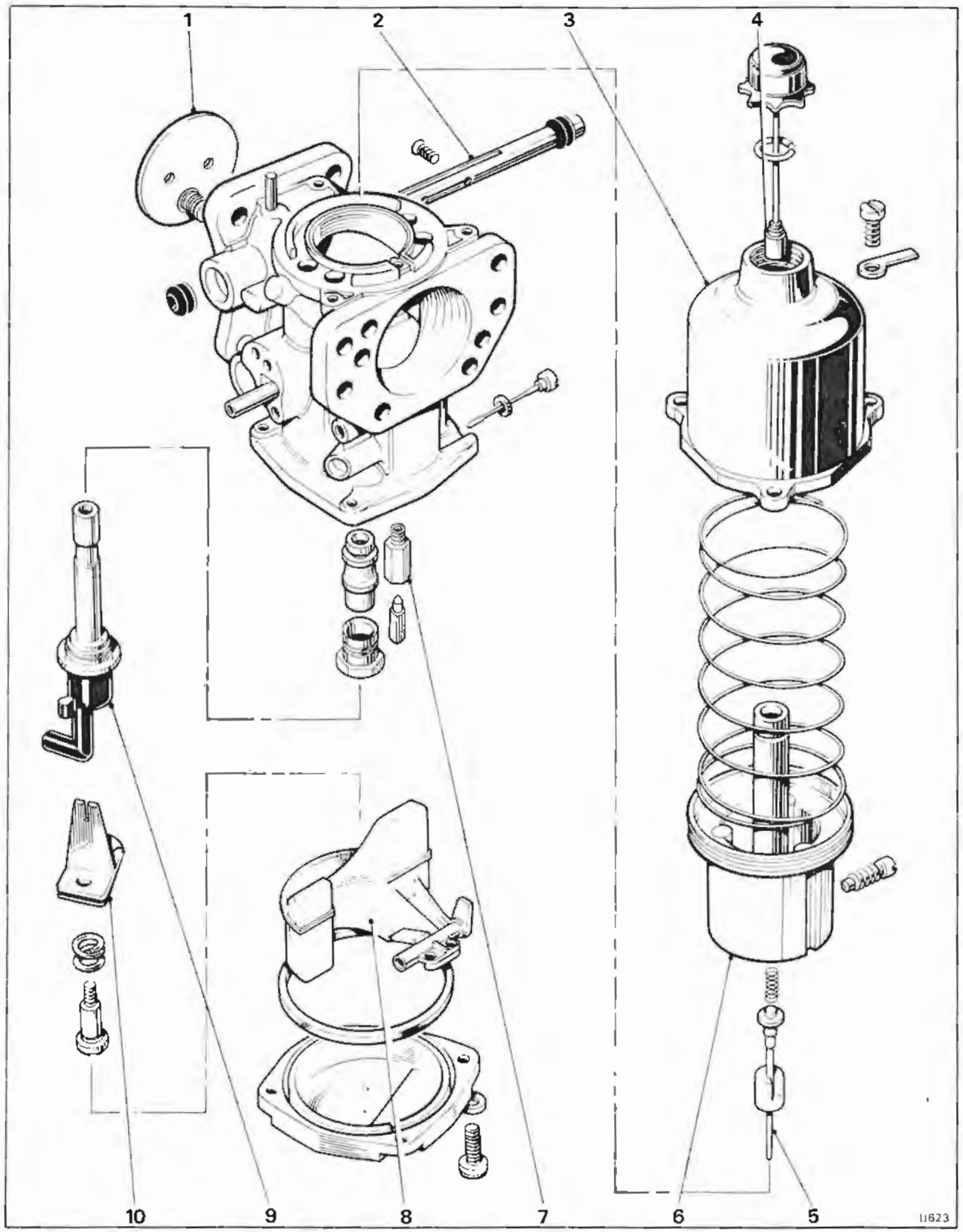

Fig. U24 SU HIF7 carburetter

1 Throttle disc with overrun valve
2 Throttle spindle
3 Suction chamber
4 Piston damper
5 Jet needle
6 Piston
7 Float needle valve assembly
8 Float
9 Jet assembly
10 Bi-metal jet lever

Printed in England
© Rolls-Royce Motors Limited 1980
January 1980
T.S.D. 4200
(U.S.A. & Canada 1980 model year except California)

Carburetters

Two S.U. HIF7 (Horizontal Integral Float Chamber) carburetters with 4,76 cm. (1.875 in.) choke bores (see Fig. U24) are fitted to the engine on a central 'tee' piece which is mounted over an eight branch induction manifold.

This type of carburetter automatically adjusts both its choke and jet area to meet the demand of the engine which is dependent on engine speed and loading. As air is drawn through the carburetter, the piston acting as an obstruction will cause a depression to be formed in the area between the throttle and the piston. This depression is communicated by means of transfer holes in the base of the piston to the area above the piston, causing an upward force to be imposed on the piston. The piston will rise in response to this force relieving the depression in the area between the piston and the throttle as it does so until a point is reached where the force acting on the piston is balanced by the weight of the piston and the load exerted by the piston spring.

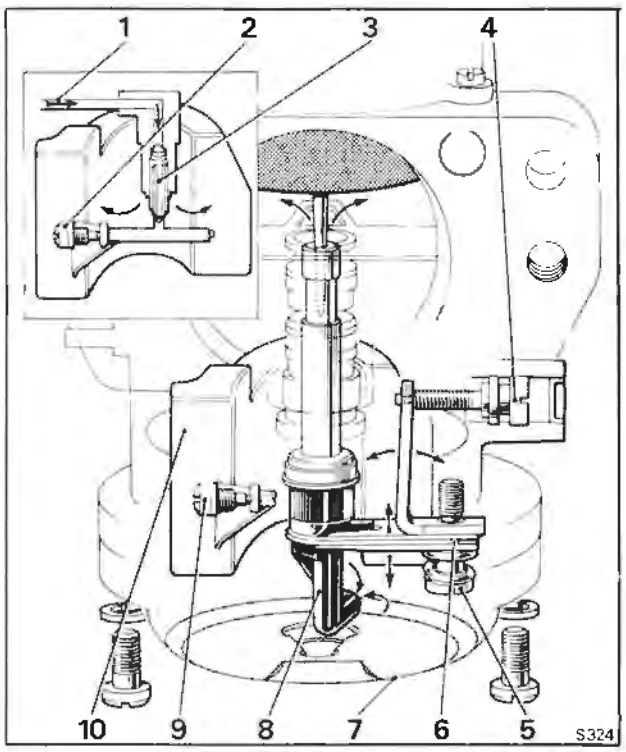

Fig. U25 Float chamber layout

1 Fuel inlet
2 Float fulcrum screw
3 Needle valve
4 Jet adjusting screw
5 Bi-metal pivot screw
6 Bi-metal assembly
7 Bottom cover-plate
8 Jet head
9 Float fulcrum screw
10 Concentric float

A spring-loaded jet needle is fitted to the carburetters, which is biased downstream and operates in a 2,54 mm. (0.10 in.) diameter main jet; this jet does not require centralising.

Float chamber (see Fig. U25)

The float chamber is incorporated in the main body casting; access to the chamber is obtained by removing the bottom cover-plate (item 7). The moulded float (item 10) is shaped so that it surrounds the jet tube and is pivoted along a line parallel to the inlet flange. The float is retained by a spindle (items 2 and 9) which screws into the body casting.

Entry of the fuel into the float chamber is via a brass tube (item 1) in the side of the carburetter body to a needle valve assembly (item 3).

The jet is pressed into the top of an aluminium tube which is in turn pressed into a plastic moulding (item 8). This hollow moulding known as the jet head is open at its lower end allowing fuel to enter the jet tube.

Mixture adjustment (see Fig. U25)

The jet tube of the HIF type carburetter is moved in the vertical plane to provide mixture adjustment.

The jet adjustment assembly is comprised of a right-angled adjusting lever of unequal length arms riveted to a bi-metal blade (item 6).

The blade is cut out to accept the jet head (item 8) and the shape of the jet head is formed so that any movement of the bi-metal blade is transmitted to the jet head, moving it in the vertical plane.

The right-angled adjusting lever and bi-metal blade (item 6) are attached to the body casting by a spring-loaded retaining screw (item 5) positioned in the short arm of the lever. This attachment allows the adjusting lever to be pivoted at the outer edge of its short arm and is loaded by the spring towards the jet adjusting screw (item 4).

The jet adjusting screw is located at the outer end of the long arm of the adjusting lever; screwing the adjusting screw inward will lower the jet, enriching the mixture and unscrewing the adjusting screw will allow the spring to return the lever together with the jet, weakening the mixture.

After the mixture has been set the jet adjustment can be sealed by fitting a plug into the jet adjusting screw recess of the carburetter body.

HIF7 carburetters are set and balanced by accurate flow measuring techniques during manufacture and therefore, adjustment of the mixture screws should not be necessary.

Fuel temperature compensation (Viscosity compensator) (see Fig. U25)

This device alters the jet position in relation to the metering needle to compensate for changes in fuel viscosity which take place with changes in fuel temperature.

When the fuel temperature rises, the viscosity is lowered, and in an uncompensated assembly this would allow more fuel to flow for a given jet/needle relationship.

In the HIF jet assembly the jet head is attached to a bi-metal blade (item 6). This bi-metal is immersed in the fuel in the float chamber and will move in the vertical plane in response to changes in fuel temperature. The jet will be raised to a weaker position on the jet needle when the fuel temperature rises and will be lowered to a richer position when the temperature falls.

From this it will be seen that once the jet position has been selected by adjusting the mixture screw, alterations of fuel temperature will bring about slight alterations in jet position to compensate for the change in fuel viscosity.

The effect of this device is that drivability is improved over wide ranges of temperature, and that exhaust emissions can be kept within closer limits during cold starting and the warm-up period. Temperature compensation also allows carburetters to have the mixture setting pre-set and sealed before the car is delivered.

Overrun valves (see Fig. U26)

During overrun (i.e. when decelerating with the throttles closed), insufficient mixture is supplied to the engine to maintain satisfactory combustion. The overrun valves alleviate this condition by allowing some mixture to pass through the throttle plates (butterflies) at high inlet manifold depressions.

An overrun valve is fitted into the throttle plate of each carburetter.

An overrun valve consists of a small disc retained in each throttle plate by a spring loaded plunger. Under normal conditions the disc is seated against the throttle plate. When the throttle is suddenly closed, the increased inlet manifold depression lifts the disc from its seating and allows a metered quantity of air/fuel mixture to pass through the throttle plate.

The action of the overrun valves maintains satisfactory combustion on overrun thus reducing hydrocarbon emissions and controlling catalyst temperatures.

After the sudden closure of the throttles and as soon as the manifold depression falls, the overrun valve disc returns to its seat on the throttle plate.

Spring-loaded jet needle (see Fig. U27)

The jet needle fitted to each carburetter is biased towards a predetermined position in the jet orifice by means of a spring-loaded fixing.

The shoulder of the needle abuts a protrusion formed on the needle guide. Under the pressure of a spring the needle is held permanently in one position relative to the air flow. As the needle is retained in a predetermined position no jet centring is required and a non-centreable jet bearing is fitted. To ensure correct fitting the needle guide carries an etched alignment mark which should be positioned mid-way between the two cut-outs in the piston.

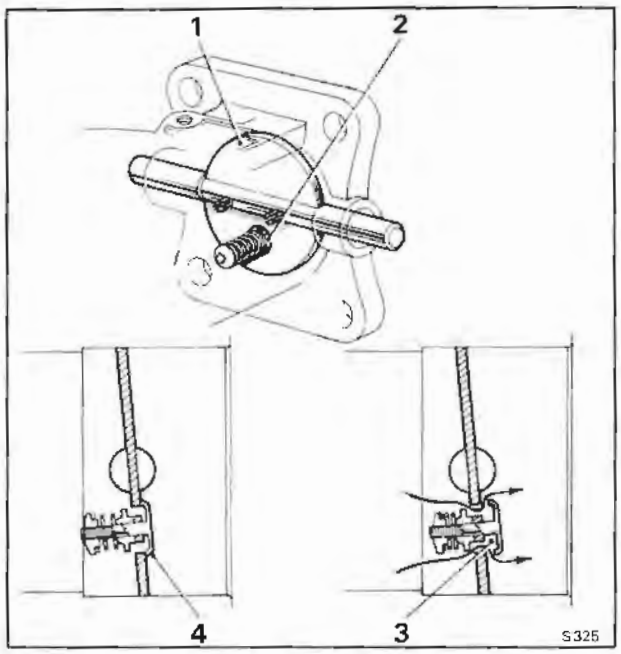

Fig. U26 Overrun valve

1 Throttle butterfly disc
2 Overrun valve
3 Overrun valve open
4 Overrun valve closed

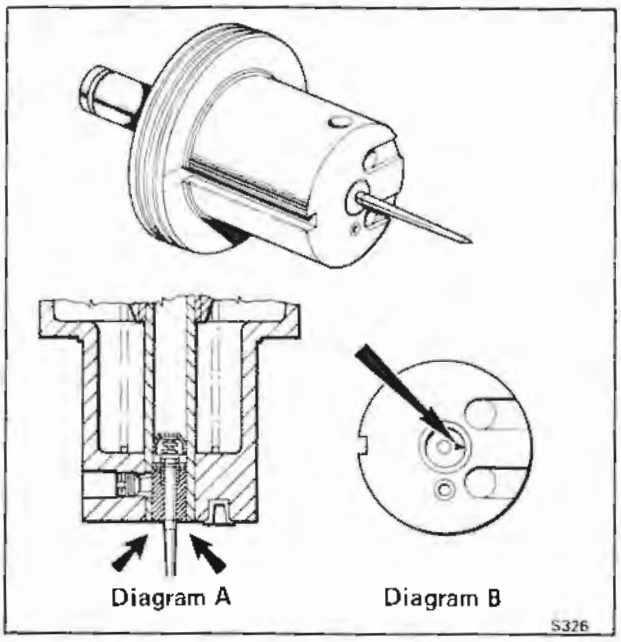

Fig. U27 Spring-loaded jet needle

Diagram A
Needle guide height setting
Diagram B
Needle guide alignment setting

Printed in England
© Rolls-Royce Motors Limited 1980
January 1980
T.S.D. 4200
(U.S.A. & Canada 1980 model year except California)

Carburetter fuel filter
A filter element is fitted into the fuel filter housing attached to the side of each carburetter. At the intervals specified in the Service Schedules these two filter elements should be discarded and new ones fitted as described in Chapter K.

Carburetters and air horns assembly - To remove
Before commencing to remove the carburetters observe the following points.
1. When disconnecting the various hoses, pipes and wiring connections ensure that they are suitably labelled to assist identification when assembling.
2. Ensure that all open ends of pipes, hoses, etc., are suitably blanked off to prevent the ingress of dirt, etc.
3. Ensure that the usual safety precautions are carried out (i.e. parking brake firmly applied, gear range selector lever in 'Park', battery disconnected, etc.).

To remove the carburetters and air horn assembly proceed as follows.
From 'A' bank side
1. Remove the air intake elbow casting (refer to Air intake - To remove in Chapter K).
2. Disconnect the fuel feed and recirculation pipes adjacent to 'A' bank carburetter.
3. Withdraw the electrical connections from the speed control unit. Disconnect the chain link from the throttle linkage to the speed control unit. Withdraw the vacuum hose from the speed control unit. Unscrew and remove the 'steady' bolt from the speed control bracket.
4. Remove the split pin, washer and clevis pin from the throttle linkage just forward of 'A' bank carburetter.

From 'B' bank side
5. Disconnect the E.G.R. feed pipe upper joint (refer to E.G.R. feed pipe - To remove, Section U2).
6. Unscrew the union on the choke stove pipe at the bi-metal housing.
7. Unscrew the fuel feed pipe union at 'B' bank carburetter filter housing.
8. Remove the crankcase emission control system pipe from the choke butterfly housing; withdraw the housing from the end of the pipe.
9. Disconnect the electrical cables to the choke solenoid at the 'snap connector' joints, adjacent to the butterfly housing.
10. Disconnect the 'Lucar' electrical connections to the anti-'run-on' solenoid and Weakening and E.G.R. cut-off solenoid.
11. Detach the following hoses from the weakening device.
a. the hose from the float chamber vent valve
b. the hose from the fuel receiver
c. the hose to the air filter
d. the hose from the venturi chamber

These hoses are labelled A, H, G and D in Figure U4.
12. Disconnect the purge line at the restrictor.
13. Unscrew the 7/16 in. A/F nut from the dipstick bracket; collect the washer.
14. Unscrew the ½ in. A/F setscrew from the centre of the carburetter 'tee' piece; withdraw the setscrew and washer.
15. Carefully withdraw the carburetters and air horn assembly, ensuring that no pipes, hoses or electrical items are still connected.

Carburetters and air horns assembly - To fit
Fit the carburetters by reversing the procedure given for their removal, noting the following points.
1. Ensure that all joint faces are clean.
2. Fit new gaskets.

Carburetters - To remove
Remove the carburetters and air horn assembly from the car (refer to Carburetters and air horn assembly - To remove) and then, remove the carburetters from the air horns assembly as follows.

'A' bank carburetter
1. Unscrew the two ½ in. A/F nuts securing the air horn to 'A' bank carburetter.
2. Withdraw the bolts, collect the washers and the full throttle stop mounting bracket.
3. Move the air horn flange upwards away from the carburetter.
4. Unscrew the union from the fuel filter.
5. Detach the vacuum supply hose from on top of the carburetter body adjacent to the carburetter and 'tee' piece flange.
6. Detach the hose from the side of the carburetter that connects to the fuel receiver in the weakening device.
7. Completely remove the two pinch bolts securing the throttle levers to the 'A' and 'B' bank carburetter butterfly spindles, remove the levers.
8. Unscrew the nut and withdraw the pinch bolt securing the 'fast-idle' lever to the carburetter spindle; withdraw the lever.
9. Unscrew the four half-nuts that retain the carburetter to the 'tee' piece flange; collect the washers.
10. Withdraw the carburetter and collect the gasket.

'B' bank carburetter
1. With a screwdriver, unscrew and remove the two screws securing the solenoid platform in position adjacent to 'B' bank carburetter. One screw is located on the air horn and has a nut underneath, and the other screw is situated in the filter housing.
2. Unscrew the ½ in. A/F nuts from the bolts that retain the air horn to the carburetter flange; withdraw the bolts and collect the washers. Move the

solenoid platform away from the carburetter.
3. Detach the hose from the side of the carburetter to the fuel receiver in the weakening device.
4. Carefully ease the air horn upwards away from the carburetter.
5. Completely remove the two pinch bolts securing the throttle levers to the 'A' and 'B' bank carburetter butterfly spindles,remove the levers.
6. Detach the vacuum supply hose from on top of the carburetter body adjacent to the carburetter and 'tee' piece flange.
7. Unscrew the remaining union from the fuel filter housing.
8. Unscrew the four half-nuts that retain the carburetter to the 'tee' piece flange; collect the washers.
9. Withdraw the carburetter and collect the gasket.

Dismantling of the components within the carburetters is not recommended as all carburetters are set and balanced by accurate flow measuring techniques during manufacture.

In certain isolated instances however, it maybe necessary to dismantle the carburetters and under these conditions the following procedure should be carefully followed.

Carburetter - To dismantle
Upper half (see Fig. U28)
1. Thoroughly clean the outside of the carburetter.
2. Unscrew the suction chamber retaining screws and remove the identity tag.
3. Lift the chamber assembly vertically from the body without tilting it.
4. Unscrew and remove the damper rod, taking care not to bend the rod as it is withdrawn.
5. Push the piston to its highest point in the suction chamber and carefully prise the circlip from around the top of the piston rod.
6. Withdraw the suction chamber from the piston in an upwards direction

Remove the piston spring, and empty the oil from the piston rod.
7. Note the position of the needle guide etch mark in relation to the piston transfer holes for correct reassembly and unscrew the needle guide locking screw.

Withdraw the needle, guide and spring.

Lower half (see Fig. U29)
8. Mark the bottom cover-plate and body to ensure correct reassembly, unscrew the retaining screws and remove the cover complete with the sealing ring.
9. Remove the jet adjusting screw complete with 'O' ring.
10. Remove the jet adjusting lever retaining screw and spring.
11. Withdraw the jet complete with adjusting lever and disengage the lever.
12. Remove the float pivot spindle and aluminium washer.

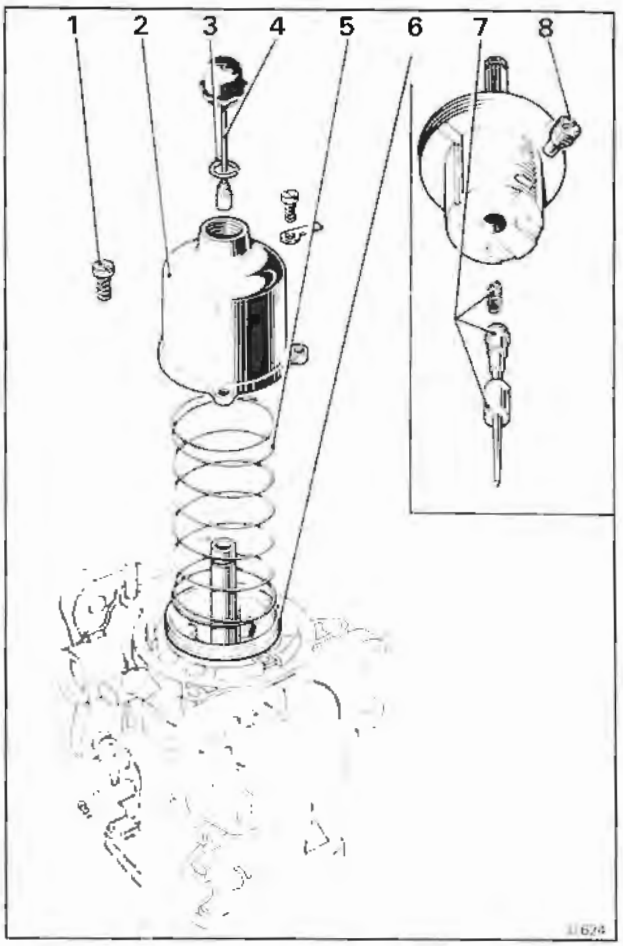

Fig. U28 Dismantling a carburetter (Upper half)
1 Suction chamber retaining screw
2 Suction chamber
3 Circlip
4 Damper rod
5 Spring
6 Piston
7 Spring-loaded needle assembly
8 Needle guide locking screw

13. Withdraw the float.
14. Remove the needle valve and unscrew the valve seat.
15. Unscrew the jet bearing locking nut and withdraw the bearing complete with fibre washer.

Throttle disc assembly (see Fig. U30)
16. Remove the throttle disc retaining screws.
17. Close the throttle and mark the position of the throttle disc in relation to the carburetter flange. **Do not mark the disc in the vicinity of the overrun valve.** Open the throttle and carefully withdraw the disc from the throttle spindle taking care not to damage the overrun valve.
18. Withdraw the throttle spindle and remove the seals, noting the way it is fitted in relation to the carburetter body to ensure correct reassembly.

Printed in England
© Rolls-Royce Motors Limited 1980
January 1980
T.S.D. 4200
(U.S.A. & Canada 1980 model year except California)

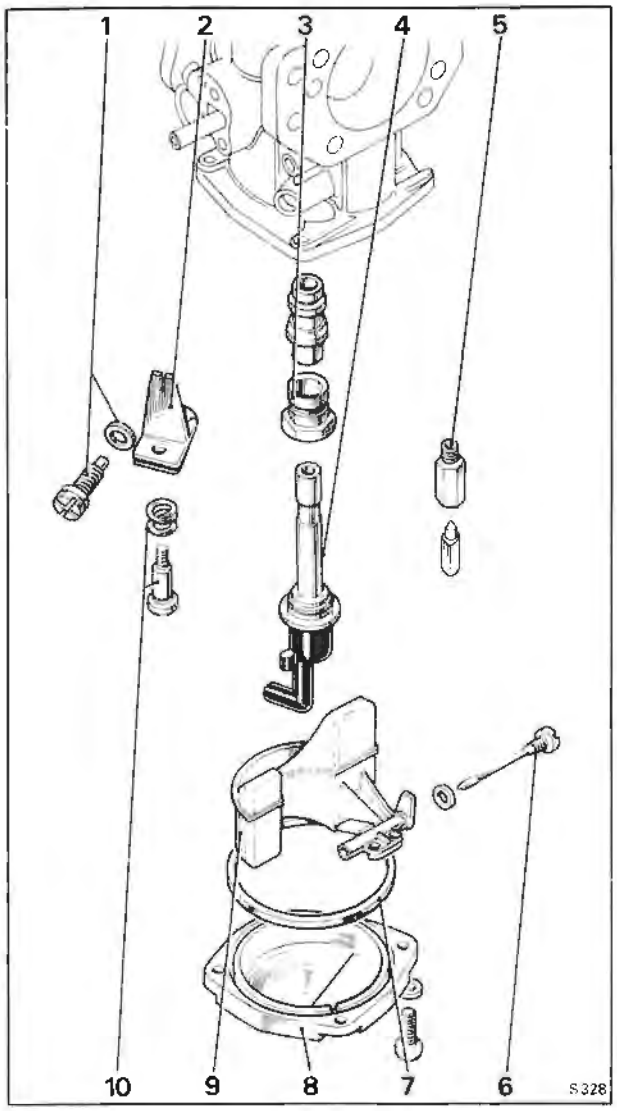

Fig. U29 Dismantling a carburetter (Lower half)
1 Jet adjusting screw and 'O' ring
2 Jet adjusting lever
3 Jet bearing assembly
4 Jet
5 Float chamber needle valve assembly
6 Float pivot spindle
7 Sealing ring
8 Bottom cover-plate
9 Float
10 Jet lever adjusting screw

Carburetter - To inspect

1. Examine the throttle spindle and its bearings in the carburetter body; check for excessive play, and fit new parts if necessary.

2. Examine the float needle and seating for damage and excessive wear; fit new parts if necessary.

3. Examine all rubber seals and 'O' rings for damage or deterioration; fit new parts if necessary. **The cover-plate sealing ring must be renewed.**

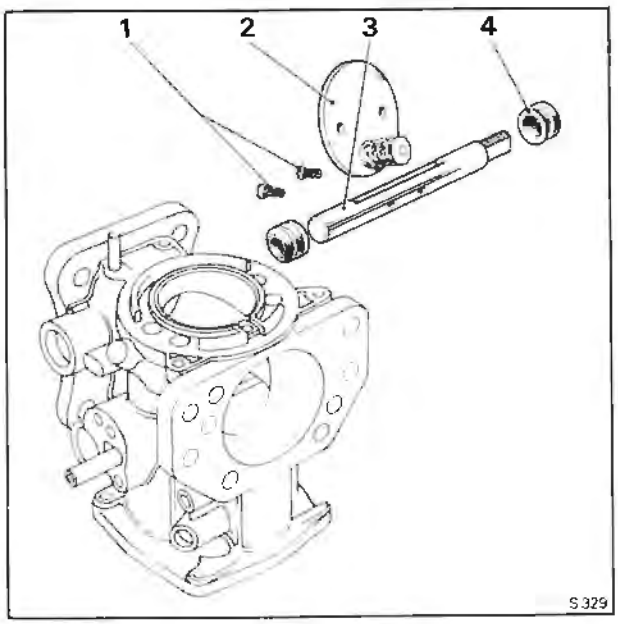

Fig. U30 Dismantling a carburetter (Throttle disc assembly)
1 Throttle disc retaining screws
2 Throttle disc assembly
3 Throttle spindle
4 Seal

4. Examine the carburetter body for cracks and damage and for security of the brass connections and the piston key.

5. Clean the inside of the suction chamber and piston rod guide with fuel or methylated spirit (denatured alcohol) and wipe dry. **Abrasives must not be used.**

6. Examine the suction chamber and piston for damage and signs of scoring.

7. Check that all the balls are in the piston ball race (2 rows, 6 per row). Fit the piston into the suction chamber, without the damper and spring, hold the assembly in a horizontal position and spin the piston. The piston should spin freely in the suction chamber without any tendency to stick.

Carburetter - To assemble

Assemble the carburetter by reversing the procedure given for removal, noting the following points.

1. Ensure that the throttle disc is fitted in its original position.

2. New throttle disc retaining screws must be used when refitting the disc. Ensure that the throttle disc is correctly positioned and closes correctly before tightening the retaining screws. Spread the split ends of the screws sufficiently to prevent turning.

3. Position the throttle spindle end seals just below the spindle housing flange.

4. When fitting the jet assembly to the adjusting

lever ensure that the jet head moves freely in the bi-metal cut-out.

5. Fit a new float pivot spindle sealing washer or anneal the existing washer.

Check the level of the float in the float chamber (refer to Carburetter float level - To set).

6. Check that the small diameter of the jet adjusting screw engages the slot in the adjusting lever and set the jet 3,05 mm. (0.12 in.) below the bridge of the body.

7. Ensure that the needle guide etch mark aligns correctly with the piston transfer holes. After fitting the needle assembly, check that the shoulder of the guide aligns with the face of the piston (see Fig. U27).

8. To prevent the piston spring from being 'wound up' during reassembly, temporarily fit the piston and suction chamber, less the piston spring, to the body and pencil mark their relative positions to each other.

9. Fit the spring to the piston, hold the suction chamber above the piston, align the pencil marks and lower the chamber over the spring and piston.

10. Fit the three retaining screws, together with the identity tag.

11. Push the piston to its highest point in the chamber, so that the piston rod protrudes out of the suction chamber neck.

12. Fit the circlip to the piston rod (see Fig. U31).

13. Fit the damper rod, noting that the damper should be filled with engine oil when the carburetter is fitted to an engine (see Carburetter air valve damper - To top-up).

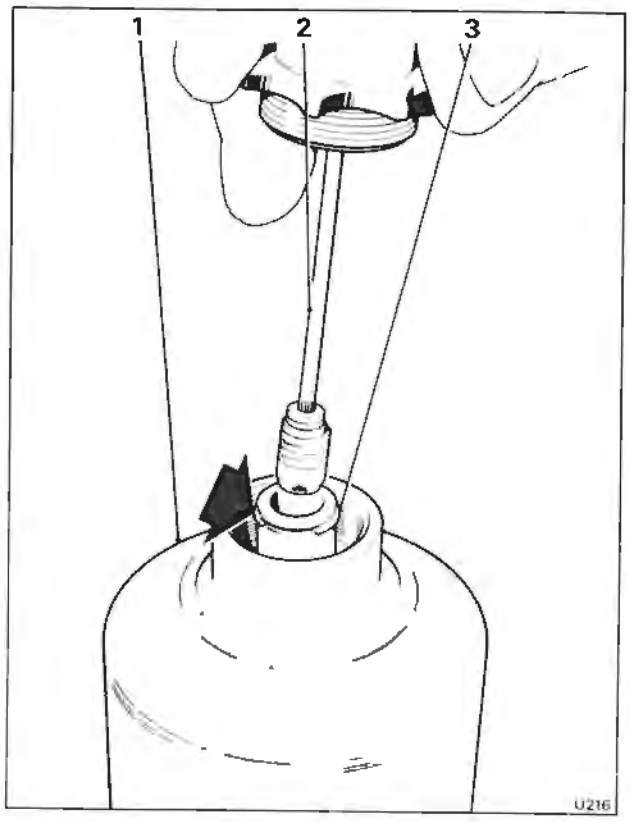

Fig. U31 Carburetter damper assembly
1 Suction chamber
2 Damper rod
3 Circlip

Carburetter float level - To set

1. Remove the carburetter from the engine.

2. Invert the carburetter.

3. Mark the bottom cover-plate and carburetter to ensure correct assembly, unscrew the retaining screws and remove the cover complete with the sealing ring.

A new rubber sealing ring must be installed when fitting the cover-plate.

4. Ensure that the float chamber needle valve is held in the closed position by the weight of the float only.

5. Check that the lowest point on the float (see Fig. U32) is either level with the float chamber face, or up to 1 52 mm. (0 060 in.) below.

6. If necessary, adjust the float position by carefully bending the brass pad.

7. Check that the float pivots correctly about the spindle.

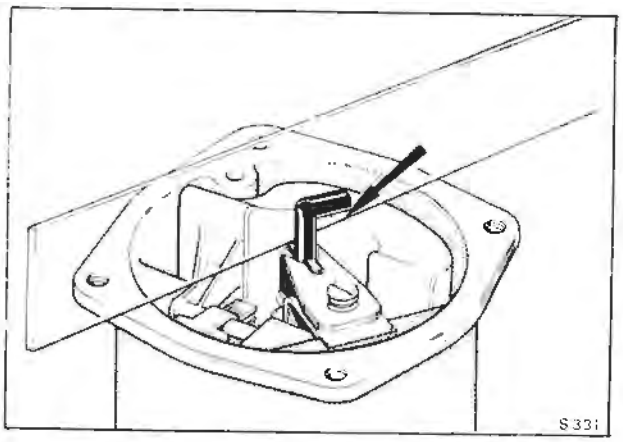

Fig. U32 Checking the float level

Carburetter air valve damper - To top-up

The upper portion of the piston rod (guide spindle), attached to the air valve piston in each carburetter, is hollow and is filled with the same type of oil as used in the engine.

At the service intervals specified in Service Schedules the damper oil level should be checked and topped-up if necessary.

1. Unscrew and remove the cap and damper assembly from the air valve damper.

2. Top-up the damper reservoir in the air valve with clean engine oil to approximately 13 mm. (0.50 in) from the top of the tube. Fit the damper into the tube and screw the cap firmly into position.

Printed in England
© Rolls-Royce Motors Limited 1980

January 1980
T.S.D. 4200
(U.S.A. & Canada 1980 model year except California)

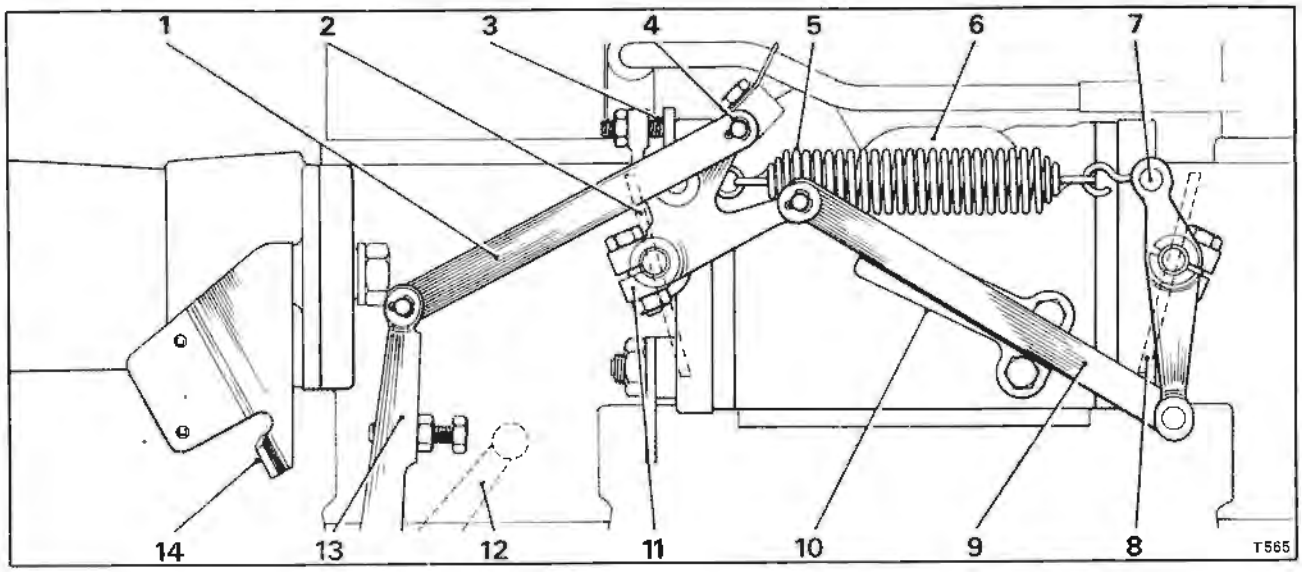

Fig. U33 Carburetter throttle linkage

1 Drive link
2 'A' bank carburetter throttle butterfly
3 Idle stop screw
4 Eccentric throttle adjuster
5 Throttle spring
6 Carburetter 'tee' piece
7 'B' bank carburetter throttle lever
8 'B' bank carburetter throttle butterfly
9 Cross link
10 Throttle cross link guide bracket
11 'A' bank carburetter throttle lever
12 Rear manifold shaft lever
13 Front manifold shaft lever
14 Full throttle stop

Carburetter throttle linkage - To fit and set (see Fig. U33)

1. Assemble 'A' bank and 'B' bank throttle levers (items 7 and 11) onto the carburetter spindles.
2. Fit the setting jig (RH 8880) into position on the throttle levers.
3. Fully close 'B' bank carburetter butterfly (item 8).
4. Tighten the pinch bolt securing 'B' bank throttle lever.
5. Fully close 'A' bank carburetter butterfly (item 2).
6. Tighten the pinch bolt securing 'A' bank throttle lever.
7. Fit the throttle spring (item 5) to the throttle levers.
8. Remove the setting jig from the throttle levers.
9. Fit the cross link guide bracket (item 10) to the carburetter 'tee' piece (item 6). Secure in position with two small screws which should be 'locked' using two tab washers.
10. Fit the cross link (item 9) and the eccentric throttle adjuster (item 4) onto the throttle levers, ensuring that both throttle butterflies are closed when adjusting and tightening the eccentric adjuster.

Note

The eccentric pin should be set in the lowest position possible.

11. Ensure that the cross link guide (item 10) has a clearance of between 1,27 mm. (0.050 in.) and 1,78 mm. (0.070 in.) with the cross link. If necessary bend the guide to give these clearances.
12. Check that the throttle linkage moves freely.
13. Fit the idle stop screw (item 3) and lock-nut; adjust until the screw just contacts the stop bracket with the throttle butterflies remaining in the closed throttle position.
14. Screw down the idle stop screw ½ turn
15. Connect one end of the drive link (item 1) to the 'A' bank throttle lever and the other end, to the manifold shaft lever (item 13).
16. Operate the linkage to ensure free movement.
17. With the throttles in the closed position check that the relationship between the 'A' bank control shaft to control rod lever (item 12) on the rear of the manifold shaft and the front manifold shaft lever (item 13) is as illustrated in Figure U33. Tighten the securing bolts on both levers.
18. Operate the mechanism; check for freedom of movement within the linkage and also clearance with the various engine components.
19. To set the remainder of the linkage from the control rod lever on the rear of the manifold shaft to the accelerator pedal refer to Chapter K - Fuel system.

Carburetters - To set

The carburetters fitted to these cars are adjusted at the factory using special equipment to ensure that their settings comply with the current emission control regulations.

Printed in England

© Rolls-Royce Motors Limited 1980

Under normal circumstances the carburetters should not require adjustment in service.

If however, adjustment is found necessary due to inadvertent disturbance or replacement of a component set the carburetters by carrying out the following operations in the sequence given.

a. Set throttle linkage and temporarily set engine idle speed. Check linkage clearances.
b. Set cold start 'fast-idle' cam.
c. Tune carburetters.
d. Set cold start 'fast-idle' speed.
e. Set full throttle stop.
f. Set the Kickdown and Full throttle E.G.R. cut-off micro-switch.

Carburetter tuning

Preliminary checks

Before tuning the carburetters the following checks should be carried out.

Ensure that the vehicle is in 'Park', the parking brake firmly applied and that the gear range actuator thermal cut-out has been removed from the main fusebox.

1. Check the condition of the sparking plugs.
2. Check the ignition timing.
3. Check the flow through the choke stove pipe.
4. Check the entire induction system for air leaks.
5. Check the purge line flow rate.
6. Ensure that the air conditioning system is switched off.
7. Start the engine and warm-up; allow to run for at least 5 minutes after the thermostat has opened.
8. Stop the engine, ensure that the choke butterfly valve is fully open and the choke 'fast-idle' off.
9. Connect an electric impulse tachometer in accordance with manufacturer's instructions.
10. Check the float chamber depression
11. Check the exhaust gas recirculation system for correct operation.
12. Check and set the full throttle exhaust gas recirculation cut-out micro-switch situated under the accelerator pedal.

Carburetter idle air balance

1. Ensure that the usual safety precautions are carried out (i.e. parking brake firmly applied, gear range selector lever in 'Park', etc.) and connect an impulse tachometer in accordance with the manufacturer's instructions.
2. Disconnect the speed control chain.
3. Start and run the engine until normal operating temperature is attained.
4. Stop the engine.
5. Fit the dial gauges RH 8841 with RH 9105 (kit to convert dial gauges to fit the HIF7 carburetters) to the carburetter dashpots in place of the dampers.
6. Zero the gauges with the engine stopped and lightly tighten the gauge clamp screws.
7. Start and run the engine at the idle speed setting (650 r.p.m.); adjust the carburetter piston lifts to be equal (within 10%) using the eccentric adjuster (see Fig. U33).
8. The average piston lift reading should now be between 2,03 mm. and 2,54 mm. (0.080 in. and 0.100 in.).

If the idle speed piston lift is over 2,54 mm. (0.100 in.) check the ignition timing at idle as this condition may result in unsatisfactory driveability.

9. Stop the engine and remove the impulse tachometer.
10. Remove the dial gauges and fit the carburetter dampers.
11. Connect the speed control chain and adjust to give a minimum slack condition, consistant with no impediment to the throttle lever to return to the idle speed position.

Carburetter mixture strength - To set

1. Ensure that the usual safety precautions are carried out (i.e. parking brake firmly applied, gear range selector lever in 'Park', etc.) and connect an impulse tachometer in accordance with the manufacturer's instructions.
2. Remove the air intake, blank off the hot idle compensator feed drilling (see Fig. U34) and replace the intake.
3. Remove the air inlet hose from the air injection system pressure relief valve and fit a blank over the valve (a suitable blank may be produced from a short length of rubber hose with one end plugged).

Note

The air injection system is inoperative when the relief valve inlet air hose is disconnected from the air pump. The valve must be blanked to prevent air being drawn into the exhaust port by pulsations in

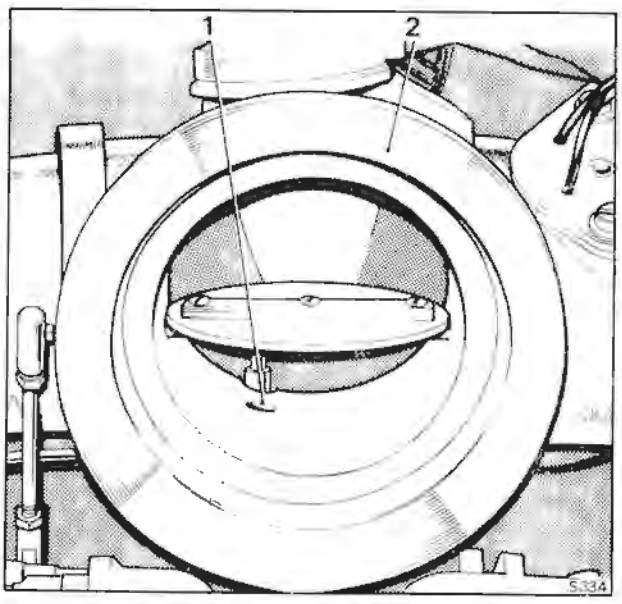

Fig. U34 Hot idle mixture compensator feed

1 Hot idle compensator feed
2 Air intake butterfly housing

T.S.D. 4200
January 1980
(U.S.A. & Canada 1980 model year except California)

the exhaust system since this would affect the idle CO reading.

4. Disconnect the E.G.R. valve signal pipe at the cut-off solenoid 'Y' piece, blank off the open 'Y' piece hose connection.

5. Unscrew and remove the pressure tapping cap from the weakening device.

6. Ensure that the engine has run for at least 25 minutes after the thermostat has opened.

7. Purge the engine at 2 000 r.p.m. in 'Neutral' for ¼ minute. Allow the engine speed to return to the idle setting and ensure that this is 650 r.p.m.; adjust if necessary using the idle stop screw.

8. Insert the probe of a CO meter into either exhaust system tailpipe and check the reading.

9. The CO meter reading should be 1% to 4%. If the reading is outside the limits quoted

a. Check for induction system leaks (if below 1%)

b. Check the choke stove and purge line flow rates.

10. If after carrying out Operation 9 the idle speed CO meter reading is still outside the limits quoted, the carburetter mixture screws (see Fig. U25) may be adjusted by equal amounts up to ½ turn in the same direction in order to achieve the mean limit of 2.5%. No attempt should be made to adjust the CO reading if it is in the region of 2.5% to 4.0%.

Note

a. Clockwise rotation of the mixture screws will richen the mixture.

b. The tuning operations should be carried out in the shortest possible time. If the time exceeds 3 minutes, run the engine at 2 000 r.p.m. in 'Neutral' for ¼ minute and then resume the tuning operations. Repeat this purging operation if a further period of 3 minutes is exceeded.

After purging the system gently tap all around the neck of the carburetter suction chamber with a lightweight non-metallic object (i.e. the wooden handle of a small screwdriver), to eliminate carburetter piston hysteresis. The engine is to be run on Indolene Clear (HO) reference fuel or equivalent (Unleaded gasoline only).

11. Stop the engine.

12. Fit the pressure tapping cap to the weakening device, fit a new sealing washer if necessary.

13. Remove the blank from the air pressure relief valve and connect the feed hose from the air pump to the relief valve.

14. Remove the blank from the cut-off solenoid 'Y' piece hose connection and connect the E.G.R. signal pipe to the solenoid connection.

15. Start the engine and check the idle speed, this should be 650 r.p.m.; adjust by means of the idle stop screw (refer to Section U6).

16. Stop the engine, remove the air intake and discard the blank from the hot idle compensator feed drilling; fit the air intake.

17. Remove the impulse tachometer.

Section U6

Ignition system

Data

Ignition timing	9° B.T.D.C. (Initial static setting) 15° B.T.D.C. at 1 200 r.p.m. 7° - 13° B.T.D.C. at idle speed (650 r.p.m.) (Approach 1 200 r.p.m. from a higher speed).

Ignition control system

The ignition system utilises an Opus distributor (in which an oscillator pick-up and control unit replace the conventional contact breaker), a high load ignition coil and a ballast resistor. The control unit comprises an electronic oscillator, amplifier and power transistor.

A drum with eight ferrite rods (one per cylinder) moulded into the outer edge is mounted onto the distributor drive-shaft. As the drum rotates a voltage is created each time a ferrite rod passes the oscillator pick-up, this signal is then amplified and used to switch off the normally conducting power transistor in the primary coil circuit thus inducing a high voltage in the secondary winding which is distributed to the sparking plugs in the normal manner.

The distributor has a conventional centrifugal advance mechanism.

In addition, the carburetter gated vacuum signal is applied to a capsule to advance the ignition timing for part throttle economy during open road cruising. This vacuum signal is inhibited by a solenoid valve until a predetermined air intake temperature is reached.

The Opus distributor provides increased accuracy of timing and increased service life before maintenance is required.

For the removal and fitting instructions of the ignition system components refer to Chapter M.

Ignition - To time (using a stroboscope)

The ignition is timed on A1 cylinder which is located at the front left-hand side of the engine (viewed from the front of the car).

Note

If the ignition timing is to be set, ensure that the sparking plugs are in good condition before running the engine; if they require cleaning or renewal the sparking plugs gap should be set to 0,9 mm. (0.035 in.).

1. To check the ignition timing commence by running the engine until normal operating temperature is attained and the choke 'fast-idle' is in the off position. Switch off the engine.

2. Connect a stroboscope and a tachometer to the engine as described in the instructions supplied with the respective equipment.

3. Disconnect the feed hose at the distributor vacuum advance capsule and blank off the feed hose.

4. Start the engine and adjust the throttle stop screw to give an idle speed of 1 200 r.p.m. When setting the engine idle speed reduce from a higher speed to 1 200 r.p.m.

5. Direct the flashing light of the stroboscope onto the crankshaft damper timing marks and timing pointer; the pointer is positioned on the right-hand side of the crankshaft damper when viewed from the front of the engine.

6. If the timing pointer does not coincide with the 15° B.T.D.C. mark on the crankshaft damper adjust the ignition timing as follows.

7. Release the clamp screw on the distributor and rotate the head of the distributor in the appropriate direction until the correct timing is obtained. Clockwise rotation of the distributor head advances the ignition and conversely anti-clockwise rotation retards the ignition. After adjustment has been carried out tighten the clamp screw and again check to ensure that the timing has not altered whilst tightening the clamp screw.

8. Set the engine idle speed to 650 r.p.m.

9. Direct the flashing light of the stroboscope onto the crankshaft damper timing marks and timing pointer. Check that the ignition timing is approximately 7° - 13° B.T.D.C.

10. Disconnect the hose from the vacuum manifold to the purge line restrictor at the restrictor (see Fig. U4). Connect a suitable length of hose between this hose and the connection on the distributor vacuum capsule.

11. Start the engine and set the idle speed to 650 r.p.m.

12. Direct the flashing light of the stroboscope onto the crankshaft damper timing marks and timing pointer. Check that the ignition timing has advanced to between 15° and 25° B.T.D.C. If the ignition timing has not advanced, the distributor assembly is faulty.

13. Stop the engine.

14. Fit all hoses to their correct connections.

15. Start the engine and set the idle speed to 650 r.p.m.

16. Stop the engine and remove all the test equipment.

Printed in England
© Rolls-Royce Motors Limited 1980
January 1980
T.S.D. 4200
(U.S.A. & Canada 1980 model year except California)

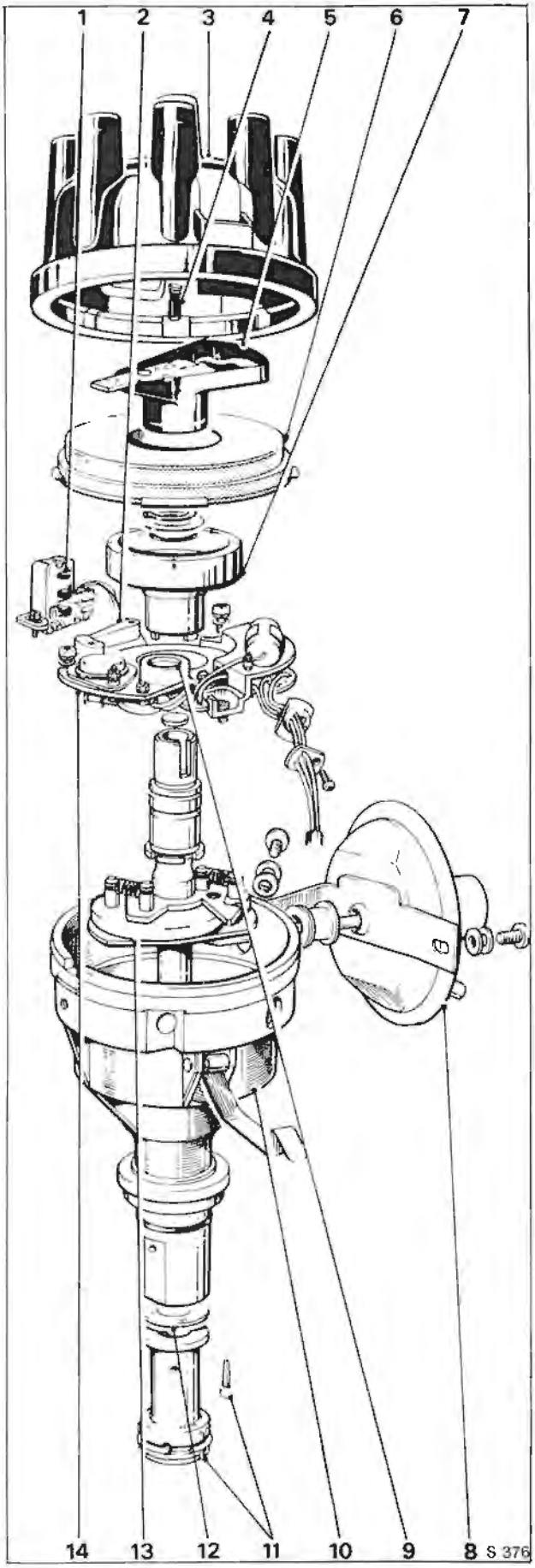

Setting the engine idle speed

Ensure that the engine is at normal operating temperature and that the choke 'fast-idle' is in the off position.

The air conditioning system must be switched off and a tachometer connected to the engine in accordance with the manufacturer's instructions.

1. Stop the engine, remove the air intake and blank off the hot idle compensator feed drilling (see Fig. U34); replace the air intake.

2. Start the engine and, if necessary, adjust the engine idle speed to 650 r.p.m. using the throttle stop screw.

3. Stop the engine and remove the air intake. Remove the blank from the hot idle compensator feed drilling and fit the air intake. Detach the tachometer and stroboscopic timing equipment.

Distributor maintenance

The distributor requires no routine maintenance except that, at the mileage intervals specified in the Service Schedules, the moulded cover and H.T. rotor arm should be removed and the spindle shaft bearings lubricated by inserting a few drops of engine oil onto the felt pad. The automatic advance mechanism should also be lubricated at this time with a few drops of engine oil inserted through apertures in the base plate.

Sparking plugs

The sparking plugs approved for this car are Champion RN 14 Y. Before fitting the plugs, set the gaps with the aid of a feeler gauge to 0,9 mm. (0.035 in.) and lightly smear the threads with 'Graphogen' grease.

Fig. U35 Ignition distributor

1 Pick-up module
2 Pick-up arm
3 Distributor cover (cap)
4 High tension brush and spring
5 Rotor arm
6 Flash over shield (dust cover)
7 Timing rotor
8 Vacuum advance unit
9 Control unit
10 Distributor body
11 Driving dog and pin
12 Thrust washer
13 Automatic advance mechanism
14 Electronic module assembly

Section U7

Electrical components

The electrical components described in this section would normally appear in Chapter M - Electrical system, however, as they are used in connection with the emission control system it is thought more practical to include the information in this Chapter.

The components concerned are as follows.

E.G.R. system and Weakening system lock-out switch
Anti 'run-on' solenoid
E.G.R. system and Weakening system cut-off solenoid
Kickdown and Full throttle E.G.R. cut-off micro-switch

E.G.R. system and Weakening system lock-out switch

The bi-metal lock-out switch is situated in the side of the air intake elbow adjacent to the choke stove take-off pipe and 'B' bank carburetter (see Fig. U36).

E.G.R. system and Weakening system lock-out switch - To remove

1. Withdraw the protective sheath and detach the electrical connections, noting the position of the connections to assist identification when assembling.
2. Unscrew and remove the three setscrews and spring washers.
3. Withdraw the lock-out switch.

E.G.R. system and Weakening system lock-out switch - To fit

Fit the lock-out switch by reversing the procedure given for removal.

1. Ensure that the gasket is in a good condition.
2. The setscrews must be fitted with spring washers.
3. The protective sheath must be fitted over the electrical connections.

E.G.R. system and Weakening system lock-out switch circuit wiring - To check

1. Detach the electrical connection from the E.G.R. and Weakening systems lock-out switch.
2. Attach one side of a test lamp to the White cable in the connection block and the other side to a good earth.
3. Switch on the ignition noting that the test lamp bulb illuminates.
4. Switch off the ignition noting that the test lamp bulb extinguishes.

E.G.R. system and Weakening system lock-out switch - To check

1. Withdraw the protective sheath from the electrical connections.
2. Do not disturb any wiring but connect both electrical connections via a test lamp.

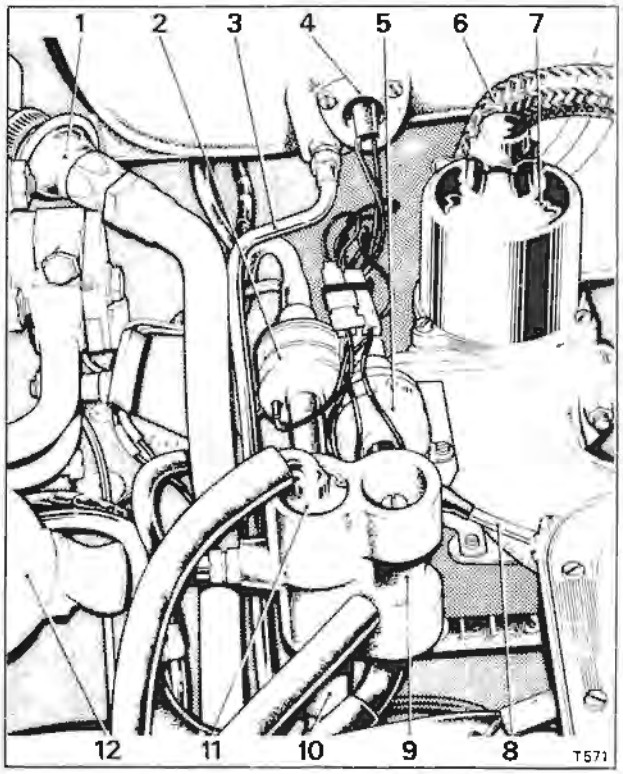

Fig. U36 Solenoid platform

1 Check valve
2 Anti 'run-on' solenoid
3 Choke stove pipe
4 E.G.R. system and Weakening system lock-out switch
5 E.G.R. system and Weakening system cut-off solenoid
6 Exhaust gas distribution pipe
7 'B' bank carburetter
8 E.G.R. signal hose
9 Mixture weakening device
10 Fuel receiver
11 Float chamber vent valve
12 Engine oil filler cap

Printed in England
© Rolls-Royce Motors Limited 1980

July 1980
T.S.D. 4200
(U.S.A. & Canada 1980 model year except California)

3. Ensure that the engine is cold [i.e. intake air temperature below approximately 14° C. (57° F.)] and switch on the ignition.
4. Check that the test lamp bulb is illuminated.
5. Start and run the engine; as the engine warms-up [i.e. the inlet air temperature exceeds approximately 14° C. (57° F.)] the test lamp bulb should extinguish.

Anti 'run-on' solenoid

The anti 'run-on' solenoid is situated on a platform adjacent to 'B' bank carburetter; it is the foremost of the two solenoids fitted on the platform.

The use of low octane fuel often causes an engine to 'diesel' (i.e. to continue to run-on after the ignition has been switched off, particularly when the engine is hot). To prevent this an anti 'run-on' solenoid is fitted between the fuel receiver and the induction manifold (see Figs. U4 and U36). When the ignition is switched off the solenoid valve opens and connects the weakening system to the induction manifold, thus creating a high depression in the float chambers which cuts off the fuel supply.

Anti 'run-on' solenoid - To remove

1. Disconnect the rubber hose from either side of the solenoid.
2. Disconnect the two electrical leads at their 'Lucar' connections.
3. Unscrew and remove the two screws situated one on either side of the solenoid body.
4. Withdraw the anti 'run-on' solenoid.

Anti 'run-on' solenoid - To fit

Fit the anti 'run-on' solenoid by reversing the procedure given for removal.

Anti 'run-on' solenoid circuit wiring - To check

1. Connect a test lamp across the two 'Lucar' connections to the solenoid. **Do not disconnect the two connections.**
2. Switch on the ignition and check that the test lamp bulb illuminates.
3. Switch off the ignition and check that the test lamp bulb is extinguished.

Anti 'run-on' solenoid - To check

1. Ensure that the usual safety precautions are carried out (i.e. parking brake firmly applied, gear range selector lever in 'Park', etc.).
2. Connect an impulse tachometer in accordance with the manufacturer's instructions.
3. Detach the weakening device pressure tapping cap (see Fig. U20) and connect a manometer capable of reading 0 to 15,24 cm. (0 to 6 in.) of water to the tapping.
4. Disconnect the carburetter vacuum signal to the E.G.R. valve at the cut-off solenoid end of the hose. Blank off the signal hose.
5. Start and run the engine at the idle speed setting (650 r.p.m.).
6. Switch off the engine and observe the reading on the manometer. The reading should momentarily increase to approximately 15,24 cm.(6.0 in.) as the engine stops.
7. If the reading does not increase, the operation of the anti 'run-on' solenoid is incorrect.

This could be caused by the following.

a. A blockage in the hose (see Fig. U20) from the anti 'run-on' solenoid to the weakening device.
b. A blockage in the hose (see Fig. U20) from the anti 'run-on' solenoid to the vacuum manifold or in the vacuum manifold.
c. Incorrect wiring to the anti 'run-on' solenoid.
d. Faulty anti 'run-on' solenoid.

E.G.R. system and Weakening system cut-off solenoid

The E.G.R. system and Weakening system cut-off solenoid is the rearmost of the two solenoids mounted on the platform adjacent to 'B' bank carburetter (see Figs. U4 and U36).

E.G.R. system and Weakening system cut-off solenoid - To remove

1. Detach the electrical connections, noting the position of the connections to assist identification when assembling.
2. Detach the rubber hose from either side of the solenoid.
3. Unscrew the two 'cheese-headed' mounting screws and withdraw the solenoid.

E.G.R. system and Weakening system cut-off solenoid - To fit

Fit the cut-off solenoid by reversing the procedure given for removal.

E.G.R. system and Weakening system cut-off solenoid circuit wiring - To check

1. Connect a test lamp across the two 'Lucar' connections to the solenoid. **Do not disconnect the two connections.**
2. Ensure the engine is cold.
3. Switch on the ignition and start the engine noting that the bulb of the test lamp is illuminated.
4. Run the engine; noting that as the engine warms-up [the inlet air temperature reaches approximately 14 °C. (57° F.)] the test lamp bulb should extinguish.
5. Stop the engine and allow to cool, noting that when the engine becomes cold [the air in the intake drops to a temperature of approximately 12 °C. (54 °F.)] the test lamp bulb again illuminates.

E.G.R. system and Weakening system cut-off solenoid - To check

1. Detach the carburetter vacuum signal to weakening system cut-off solenoid hose at the

solenoid and blank off the hose.

Connect a suitable length of hose to the solenoid connection.

2. Clean the open end of the additional hose.
3. Switch on the ignition.
4. Place the hose in the mouth and apply pressure.
5. If the operation of the solenoid is correct note that the following conditions apply.

a. With a cold engine [i.e. the inlet air temperature below approximately 14 °C. (57 °F.)] blowing air through the hose **should not** be possible.

b. As the engine warms-up [i.e. an inlet air temperature of approximately 14° C. (57° F.) or above] blowing air through the hose should be possible.

c. As the engine again cools [i.e. the inlet air temperature drops below approximately 12° C. (54 °F.)] the conditions described in (a) should again apply.

Kickdown and Full throttle E.G.R. cut-off micro-switch

This micro-switch is situated on the underside of the car body below the accelerator pedal, it is a dual purpose micro-switch providing kickdown (detent) for the torque converter transmission and cut-out for the E.G.R. system.

Kickdown and Full throttle E.G.R. cut-off micro-switch - To remove

1. Drive the car onto a ramp and raise to a suitable working height.
2. From inside the car, locate the micro-switch operating plunger beneath the accelerator pedal.
3. Unscrew the large retaining nut and withdraw the washer.
4. From under the car detach the 'Lucar' connections and withdraw the micro-switch assembly.

Kickdown and Full throttle E.G.R. cut-off micro-switch - To dismantle

The assembly comprises the micro-switch, plunger and casing, the assembly should be removed from the car before any dismantling is commenced.

1. Using a screwdriver carefully 'ease back' the indentations which crimp around the cover of the assembly.
2. Remove the cover.
3. Disconnect the two electrical cables from the micro-switch. The White/Green cable has a 'Lucar' connection and the White cable is retained by a small cheesehead screw.
4. Unscrew the two 6B.A. nuts securing the micro-switch to its mounting bracket. Withdraw the cheesehead screws and collect the two washers from each screw. Withdraw the micro-switch.
5. Unscrew the two cheesehead screws retaining the micro-switch mounting bracket. Withdraw the bracket.
6. Remove the circlip from around the plunger assembly.

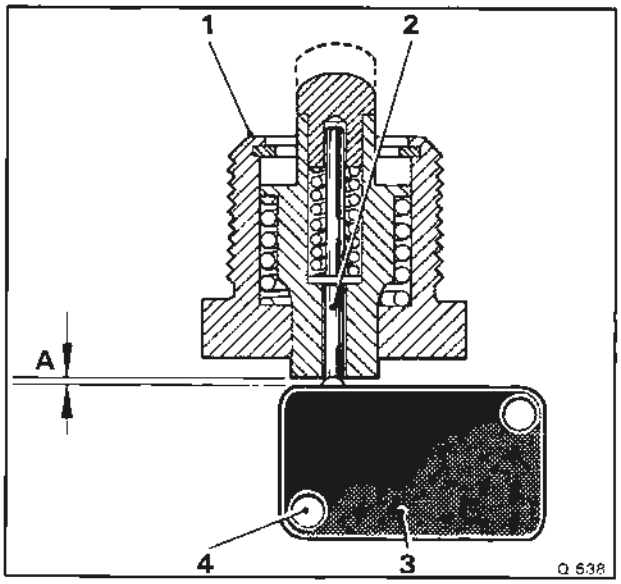

Fig. U37 Kickdown and Full throttle E.G.R. cut-off micro-switch

1 Kickdown and Full throttle E.G.R. cut-off plunger assembly
2 Secondary plunger
3 Micro-switch
4 Elongated hole in mounting plate (micro-switch adjustment)
A Clearance of 0,127 mm. (0.005 in.)

7. Withdraw the plunger assembly and spring.

Kickdown and Full throttle E.G.R. cut-off micro-switch - To assemble

Assemble the micro-switch and plunger by reversing the procedure given for dismantling, noting the following points.

1. Ensure that the rubber seal is in a good condition and fitted securely to the body of the assembly. The seal is secured using Dunlop Adhesive S1240 or equivalent.

Kickdown and Full Throttle E.G.R. cut-off micro-switch - To set

1. Ensure that the carburetter linkage (refer to Section U5) and the accelerator pedal linkage (refer to Section K7) are correctly set. Swing the micro-switch towards the base of the plunger until a 0,254 mm. to 0,762 mm. (0.010 in. to 0.030 in.) gap exists between the micro-switch button and the plunger.
2. Tighten the micro-switch securing nuts and afterwards, check that the gap set in Operation 1 has not been disturbed.
3. Slowly depress the plunger to obtain full stroke. Check that the switch operates (audible click) during this operation.
4. Ensure that with the main plunger fully depressed it is still clear of the micro-switch case (see Fig. U37).

Printed in England
© Rolls-Royce Motors Limited 1980
January 1980
T.S.D. 4200
(U.S.A. & Canada 1980 model year except California)

5. Slowly release the plunger ensuring that the micro-switch contacts open (audible click).
6. Ensure that the clearance set between the plunger and the micro-switch button, remains as set in Operation 1.

Kickdown and Full throttle E.G.R. cut-off micro-switch - To check
To check the circuit wiring and micro-switch operation for full throttle E.G.R. cut-off proceed as follows.
1. Carry out Operations 1 to 4 inclusive under the heading 'E.G.R. system and Weakening system solenoid circuit wiring - To check'.
2. Stop the engine and depress the accelerator to activate the micro-switch.
3. Ensure that the test lamp bulb is illuminated whilst the full throttle position is maintained with the accelerator pedal.

Section U8

Fault diagnosis

Symptoms	Possible cause
1. Engine will not start. (Starter motor operating).	1. (a) Ignition circuit broken. (b) Failed anti 'run-on' solenoid or failure of electrical supply circuit. (c) Ignition system faulty. (d) Damaged or contaminated ignition high tension circuit. (e) Blocked fuel feed line, fouled float chamber filters or fouled fuel recirculation restrictor (f) Faulty choke bi-metal coil. (g) Choke solenoid inoperative. (h) Faulty choke 'fast-idle' mechanism. (i) Air leak into induction system. (j) Faulty hot idle mixture compensator. (k) Weakening device filter blocked, weakening device air intake non-return valve failed or blockage in rubber connecting hoses (l) Faulty weakening device cut-off solenoid or failure of electrical supply circuit (m) Faulty weakening device control switch or failure of electrical supply circuit. (n) Dislodged venturi in weakening device (o) Flooding of carburetter float chamber or jet (p) Exhaust gas recirculation valve failed.
2. Engine idles very roughly	2. (a) Ignition system faulty (b) Fouled sparking plugs (c) Damaged or contaminated ignition high tension circuit (d) Fouled fuel recirculation restrictor (e) Air leak into induction system. (f) Faulty hot idle compensator (g) Weakening device filter blocked, weakening device air intake non-return valve failed or blockage in rubber connecting hoses. (h) Badly worn or damaged carburetter control linkage. (i) Flooding of carburetter float chamber or jet. (j) Sticking carburetter piston (k) Incorrect operation of carburetter jet compensation. (l) Fouled carburetter float chamber or jet. (m) Exhaust gas recirculation valve failed. (n) Incorrect operation of temperature controlled air intake system.
3. Engine stalls	3. (a) Ignition circuit broken. (b) Failed anti 'run-on' solenoid or failure of electrical supply circuit. (c) Ignition system faulty. (d) Damaged or contaminated ignition high tension circuit.

Printed in England
© Rolls-Royce Motors Limited 1980

January 1980
T.S.D. 4200
(U.S.A. & Canada 1980 model year except California)

Symptoms	Possible cause
3. Engine stalls (continued)	(e) Blocked fuel feed line, fouled float chamber filters or fouled fuel recirculation restrictor. (f) Air leak into induction system. (g) Faulty hot idle mixture compensator. (h) Weakening device filter blocked, weakening device air intake non-return valve failed or blockage in rubber connecting hoses. (i) Badly worn or damaged carburetter control linkage. (j) Flooding of carburetter float chamber or jet. (k) Sticking carburetter piston. (l) Incorrect operation of carburetter jet compensation. (m) Fouled carburetter float chamber or jet. (n) Exhaust gas recirculation valve failed.
4. (i) Engine shows signs of power loss evident at high speeds and loading (ii) Engine misfires particularly on hard acceleration from low speed.	4. (a) Ignition system faulty. (b) Fouled sparking plugs. (c) Damaged or contaminated ignition high tension circuit. (d) Blocked fuel feed line or fouled float chamber filters. (e) Choke system operation incorrect (f) Sticking carburetter piston (g) Fouled carburetter float chamber or jet. (h) Faulty exhaust gas recirculation full throttle cut-out switch or failure of electrical supply circuit. (i) Exhaust gas recirculation valve failed. (j) Failed exhaust gas recirculation valve, cut-out solenoid or electrical supply circuit.
5. Engine hesitates or misfires under light load.	5. (a) Failed anti 'run-on' solenoid or failure of electrical supply circuit (b) Ignition system faulty. (c) Fouled sparking plugs. (d) Damaged or contaminated ignition high tension circuit. (e) Blocked fuel feed line or fouled float chamber filters. (f) Air leak into induction system. (g) Faulty hot idle mixture compensator. (h) Weakening device filter blocked, weakening device air intake non-return valve failed or blockage in rubber connecting hoses. (i) Dislodged venturi in weakening device. (j) Flooding of carburetter float chamber or jet. (k) Incorrect operation of carburetter jet compensation. (l) Fouled carburetter float chamber or jet. (m) Exhaust gas recirculation valve failed. (n) Incorrect operation of temperature controlled air intake system.

6. Increase in fuel consumption.	**6.** (a) Ignition system faulty. (b) Fouled fuel recirculation restrictor. (c) Faulty choke bi-metal coil. (d) Choke system operation incorrect. (e) Air leak into induction system. (f) Faulty hot idle mixture compensator. (g) Weakening device filter blocked, weakening device air intake non-return valve failed or blockage in rubber connecting hoses. (h) Faulty weakening device cut-off solenoid or failure of electrical supply circuit. (i) Faulty weakening device control switch or failure of electrical supply circuit. (j) Air leak in mixture weakening system. (k) Flooding of carburetter float chamber or jet. (l) Sticking carburetter piston. (m) Incorrect operation of carburetter jet compensation. (n) Incorrect purge flow rate. (o) Exhaust gas recirculation valve failed.
7. Decrease in fuel consumption	**7.** (a) Air leak in mixture weakening system. (b) Incorrect operation of carburetter jet compensation. (c) Incorrect purge flow rate. (d) Faulty exhaust gas recirculation temperature control switch or failure of electrical supply circuit. (e) Exhaust gas recirculation valve failed.
8. Engine 'backfires' on overrun	**8.** (a) Ignition system faulty. (b) Air leak into induction system. (c) Faulty hot idle mixture compensator. (d) Exhaust gas recirculation valve failed.
9. Sudden increase in engine idle speed.	**9.** (a) Faulty choke 'fast-idle' mechanism (b) Failed carburetter overrun valve.
10. Excessive noise from air injection pump or system.	**10.** (a) Faulty or damaged air injection pump, relief or check valves, connecting hoses or pipes.

Printed in England
© Rolls-Royce Motors Limited 1980

T.S.D. 4200 January 1980
(U.S.A. & Canada 1980 model year except California)

Section U9

Workshop tools

Tool Number	Description
RH 8090	Pliers - wire hose clips
RH 8725	Flowmeter (rotameter type)
RH 8841	Dial gauge - carburetter piston lift
RH 8880	Setting jig - throttle levers
RH 8945	Connector - choke stove pipe
RH 9096	Fitting tool - 'A' bank mixture adjusting screw tamperproof seal
RH 9097	Fitting tool - 'B' bank mixture adjusting screw tamperproof seal
RH 9105	Kit - to adapt RH 8841 to fit S.U. HIF 7 carburetters

Printed in England
© Rolls-Royce Motors Limited 1980

T.S.D. 4200
(U.S.A. & Canada 1980 model year except California)
January 1980

Chapter U

Emission control systems

Applicable to 1980 model year cars destined for California

Section

U1 Introduction
U2 Fuel injection system
U3 Exhaust emission control system
U4 Fuel evaporative emission control system
U5 Crankcase emission control system
U6 Ignition system
U7 Electrical components
U8 Throttle linkage
U9 Workshop tools
U10 Running changes

Printed in England

© Rolls-Royce Motors Limited 1980

January 1980

TSD 4200
(California
1980 Model year)

Chapter U—1980 California

Issue record sheet 1

March 1984

The dates quoted below refer to the issue date of individual pages within this chapter.

Section	U1	U2	U3	U4	U5	U6	U7	U8	U9	U10
Page No.										
1	Jan 80	Jan 80	Jan 80	Jan 80	Jan 80	Aug 81	Jan 80	Jan 80	Jan 80	Jan 80
2		Jan 80	Jan 80	Jan 80	Jan 80	Aug 81	Jan 80	Jan 80		
3		Jan 80	Jan 80	Jan 80			Jan 80			
4		Jan 80	Jan 80	Jan 80						
5		Jan 80	Jan 80							
6		Jan 80								
7		Jan 80								
8		Jan 80								
9		Jan 80								
10		Jan 80								
11		Jan 80								
12		Jan 80								
13		Jan 80								
14		Jan 80								
15		Jan 80								
16		Jan 80								
17		Jan 80								
18		Jan 80								
19		Jan 80								
20		Jan 80								
21		Jan 80								
22		Jan 80								
23		Mar 82								
24		Mar 82								
25		Jan 80								
26		Jan 80								
27		Jan 80								
28		Jan 80								
29		Jan 80								
30		Jan 80								
31		Jan 80								
32		Jan 80								
33		Mar 84								
34		Jan 80								
35		Jan 80								
36		Jan 80								
37		Jan 80								
38		Jan 80								
39		Mar 82								
40		Mar 82								
41		Mar 82								
42		Mar 82								
43		Jan 80								
44		Jan 80								
45		Jan 80								
46		Jan 80								
47		Jan 80								
48		Jan 80								

Printed in England

© Rolls-Royce Motors Limited 1984

Chapter U—1980 California

Issue record sheet 2

January 1980

The dates quoted below refer to the issue date of individual pages within this chapter.

Section	U2
Page No.	
49	Jan 80
50	Jan 80
51	Jan 80
52	Jan 80
53	Jan 80
54	Jan 80
55	Jan 80
56	Jan 80
57	Jan 80
58	Jan 80
59	
60	
61	
62	
63	
64	
65	
66	
67	
68	
69	
70	
71	
72	
73	
74	
75	
76	
77	
78	
79	
80	
81	
82	
83	
84	
85	
86	
87	
88	
89	
90	
91	
92	
93	
94	
95	
96	

Printed in England
© Rolls-Royce Motors Limited 1980

Section U1

Introduction

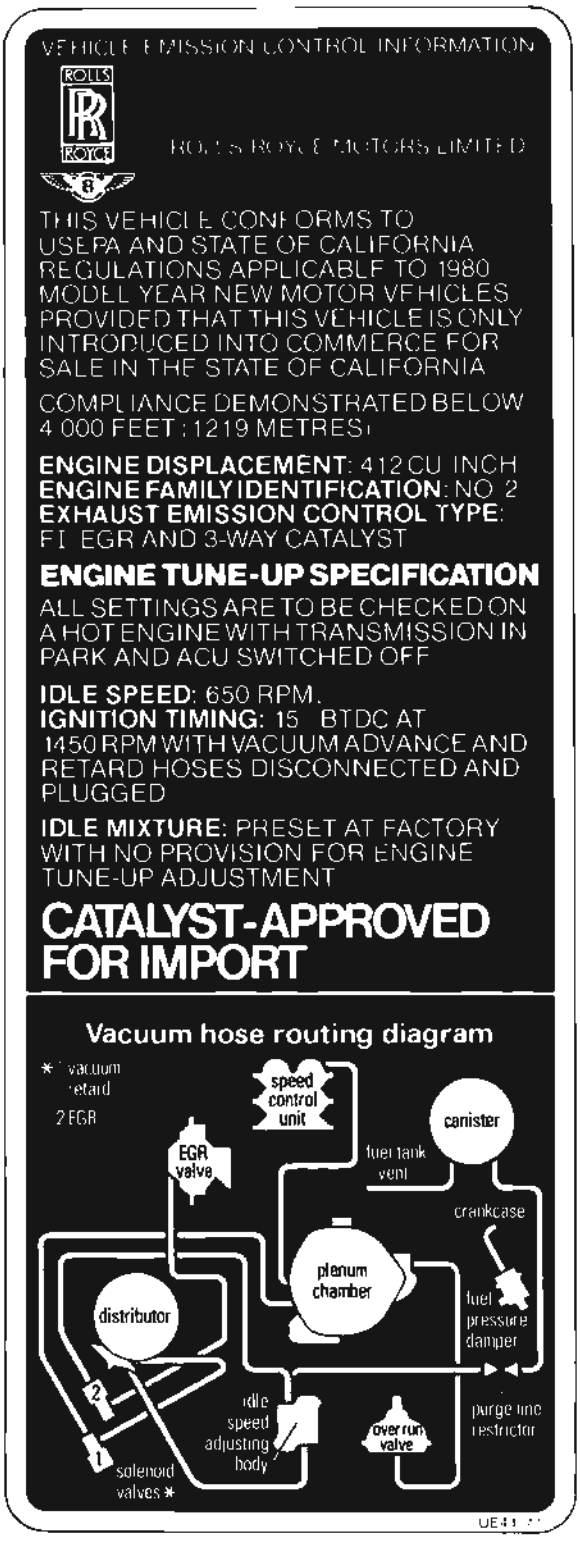

Fig. U1 Emission control certification label

Identification

This Chapter has been written specifically for cars fitted with Emission Control Systems conforming to the Californian regulations applicable to 1980 model year new motor vehicles.

It is important therefore that Service Personnel fully understand the contents of this Chapter so that the special servicing can be correctly carried out.

Rolls-Royce and Bentley motor cars conforming to the above regulations and produced to the 1980 model year specification can be readily identified as follows.

1. Car Serial Number

Two letters within the Car Serial Number are used to identify cars produced to this specification.

A letter L is used as the last prefix letter to identify the vehicle as a 1980 model year car, destined for the North American continent.

In addition, a letter C is used as a suffix letter after the Car Serial Number to indicate that the vehicle has been produced to the Californian specification e.g. SRL 39754C.

2. Emission Control Certification Label

A 1980 Emission Control Certification Label (similar to Figure U1) is located on top of the automatic air conditioning system heater box, inside the engine compartment.

Engine compartment

Figures U2 and U3 show the location of the major emission related components within the engine compartment.

Fuel injection system

Figure U4 provides layout details of the fuel injection system which is described in Section U2.

Hose routing diagram

Figure U5 gives details of the various hose 'runs' and connections in and around the engine compartment, that are associated with the emission related components

Torque tightening

When fitting the various emission control systems components, ensure that the securing nuts and set-screws are tightened to the torque figures given in Chapter P, unless otherwise stated in this Chapter.

Printed in England
© Rolls-Royce Motors Limited 1980
January 1980
T.S.D. 4200
(California
1980 Model year)

Section U2

Fuel injection system

	Page
Description of the system	
Air flow sensing	U2 - 3
Fuel circuit	U2 - 3
Primary fuel circuit	U2 - 3
Control fuel circuit	U2 - 7
Fuel distribution	U2 - 9
Differential pressure valves	U2 - 9
'Closed loop' mixture control system (Lambda control system)	U2 - 10
Description of the components	
Injector	U2 - 10
Plenum chamber	U2 - 11
Cold start injector	U2 - 11
Idle speed adjustment screw	U2 - 11
Overrun valve	U2 - 11
Air flow sensor plate	U2 - 12
Differential pressure valves	U2 - 12
Fuel distributor	U2 - 12
Control piston	U2 - 12
System pressure regulator	U2 - 12
Pressure damper	U2 - 12
Pressure control valve	U2 - 13
Electronic control unit	U2 - 13
Oxygen sensor	U2 - 14
Fuel tank	U2 - 15
Fuel pump	U2 - 15
Fuel accumulator	U2 - 16
Fuel filters	U2 - 16
Warm-up regulator	U2 - 16
Auxiliary air valve	U2 - 17
Thermal time switch	U2 - 17
Electrical circuit and System warning device	
Electrical circuit	U2 - 17
Engine 'running' sensor and fuel pump inhibit	U2 - 18
Cold start injector and thermal time switch	U2 - 19
Exhaust gas recirculation inhibit	U2 - 19
Ignition distributor vacuum retard	U2 - 19
Electrical wiring diagram (Theoretical)	U2 - 20
Pressure control valve, auxiliary air valve and warm-up regulator	U2 - 21
System warning device	U2 - 21
Modes of operation	
Engine warm-up	U2 - 21
Engine idle speed	U2 - 22
Engine part load operation	U2 - 22
Engine full load operation	U2 - 22
Engine overrun	U2 - 22

	Page
Flow charts	
'Closed loop' system (Sheet 1 of 2)	U2 - 23
'Closed loop' system (Sheet 2 of 2)	U2 - 25
Wiring loom	U2 - 27
Basic K - Jetronic system	U2 - 29
Workshop safety precautions	
General	U2 - 30
Fire	U2 - 30
Fuel pressure	U2 - 30
Health risk	U2 - 30
Cleanliness	U2 - 30
Fault diagnosis	
Basic procedure	U2 - 31
Control valve damper failure	U2 - 31
System air leaks	U2 - 31
Metering unit lever sticking	U2 - 31
Positioning the air flow sensor plate	U2 - 32
Checking the auxiliary air valve	U2 - 33
Checking the primary fuel circuit	U2 - 33
Checking the control pressure	U2 - 34
Checking the fuel system for leaks	U2 - 35
Checking the injectors	U2 - 36
Checking the delivery balance of the fuel distributor	U2 - 38
Engine idle speed	U2 - 38
Idle mixture strength	U2 - 38
Checking the opening of the throttle	U2 - 38
Checking the 'wide open' throttle mixture enrichment	U2 - 38
Checking the air filter and ducting	U2 - 38
Checking the cold start system	U2 - 39
E.G.R. system	U2 - 39
Checking the engine running sensor	U2 - 39
Checking the fuel accumulator diaphragm for a leak	U2 - 40
Checking for a faulty overrun valve	U2 - 40
Fault diagnosis test equipment and special procedures	
Pressure tester and adapter	U2 - 40
Fuel delivery quantity comparison tester	U2 - 41
'Closed loop' system tester	U2 - 42
Bridging the engine running sensor	U2 - 42
Depressurising the fuel system	U2 - 42
Water contamination of the fuel	U2 - 43
Removal and fitting of components	
Fuel tank	U2 44
Fuel filler	U2 - 46
Fuel pump	U2 - 46
Fuel accumulator	U2 - 46

Printed in England

© Rolls-Royce Motors Limited 1980

January 1980

TSD 4200
(California
1980 Model year

	Page
Fuel filters	U2 - 47
Fuel lines	U2 - 47
Non-return valve	U2 - 47
Fuel distributor	U2 - 48
Primary system pressure regulator	U2 - 49
Mixture control unit assembly	U2 - 50
Throttle body	U2 - 51
Warm-up regulator	U2 - 51
Pressure control valve damper	U2 - 52
Pressure control valve	U2 52
Auxiliary air valve	U2 - 52
Overrun valve	U2 - 52
Plenum chamber	U2 - 52
Cold start injector	U2 - 52
Thermal time switch	U2 - 55
Injectors	U2 - 55
Oxygen sensor	U2 - 55
Engine running sensor	U2 - 55
Air intake element	U2 - 55
Air intake	U2 - 55
Service adjustments	
Preliminary checks	U2 - 56
Tuning procedure	U2 - 56
'Wide open' throttle micro-switch	U2 - 56
Mixture strength	U2 - 56
Idle speed	U2 - 57

Section U2

Fuel injection system

The purpose of the description below is to provide elementary details of the fuel injection system. This information will enable service personnel to familiarise themselves with the operation of the system, so that the servicing procedures given in this Workshop Manual can be carried out.

Description of the system (see Fig. U4)

To comply with the exhaust emission control regulations for certain territories,it is necessary to use a three-way exhaust catalytic converter. In order to achieve maximum efficiency the catalytic converter requires very accurate control of the engine air/fuel ratio. This has been accomplished by using a continuous fuel injection system with 'closed loop' mixture control and an exhaust gas oxygen sensor.

The system utilises many parts of the Bosch K-Jetronic continuous fuel injection system.

The basic principle of operation is that the accelerator pedal controls the movement of the throttle plate which regulates the amount of air drawn into the engine. An air flow sensor fitted upstream of the throttle plate, monitors the quantity of intake air entering the system. Dependent upon the volume of air metered, a fuel distributor apportions a quantity of fuel to the injector adjacent to each cylinder.

The air flow sensor and the fuel distributor are combined into one assembly known as the mixture control unit (see Fig. U6).

The precisely metered quantity of fuel is continuously sprayed from the injectors in a finely atomised form into the induction manifold behind the engine inlet valves. The air/fuel mixture is then drawn into the engine cylinders whenever an inlet valve opens.

Air flow sensing

The air flow sensor consists of an air funnel in which moves an air flow sensor plate mounted on a pivoted lever (see Fig. U7). When the engine is operating the sensor plate is deflected into the air funnel, the deflection being dependent upon the volume of air passing through the funnel. The air will deflect the sensor plate until a state of balance exists between the force on the air sensor plate and the counter force provided by fuel at a constant pressure acting on the end of the control piston.

The weight of the air sensor plate and connecting lever are balanced by a counterweight on the fuel distributor side of the lever.

Movement of the control piston and its horizontal control edge (see Fig. U7) either increases or decreases the open area of the eight metering slits (one for each engine cylinder) in the fuel distributor.

Differential pressure valves (one for each cylinder) located within the fuel distributor, maintain a constant pressure drop across the metering slits.

Since the air flow sensor plate and the control piston are operated by the same lever, the rate of fuel discharge is proportional to the deflection of the air sensor plate which is governed by the calibrated cone within the funnel.

The mixture strength of each engine is adjusted at the engine idle speed setting, during manufacture of the vehicle. This is achieved by turning a screw which alters the position of the air flow sensor plate lever relative to the control piston. Turning the adjustment screw either raises or lowers the control piston for a given engine idle speed position of the air flow sensor plate, thereby richening or weakening the idle mixture. The adjustment screw is subsequently sealed and no further mixture adjustment should be necessary.

Fuel circuit

The fuel supply system comprises the primary circuit, control circuit and the lambda control circuit.

The fuel is at different pressures in various parts of the circuit as follows.

Primary circuit (nominal)	4,8 bar (70 lbf/sq.in.)
Differential pressure valves (upper chambers)	4,6 bar (67 lbf/sq.in.)
Differential pressure valves (lower chambers - lambda control)	4,65 to 4,75 bar (67.4 to 68.9 lbf/sq.in.)
Control circuit (variable depending upon engine temperature)	0,5 to 3,7 bar (7.25 to 54 lbf/sq.in.)
Injection pressure	3,6 bar (52 lbf/sq.in.)

Primary fuel circuit (see Fig. U4)

In the primary circuit a roller cell pump driven by an electric motor draws fuel from the fuel tank and pumps it via a fuel accumulator and twin filters to the fuel distributor.

Printed in England
© Rolls-Royce Motors Limited 1980
January 1980
T.S.D. 4200
(California
1980 Model year)

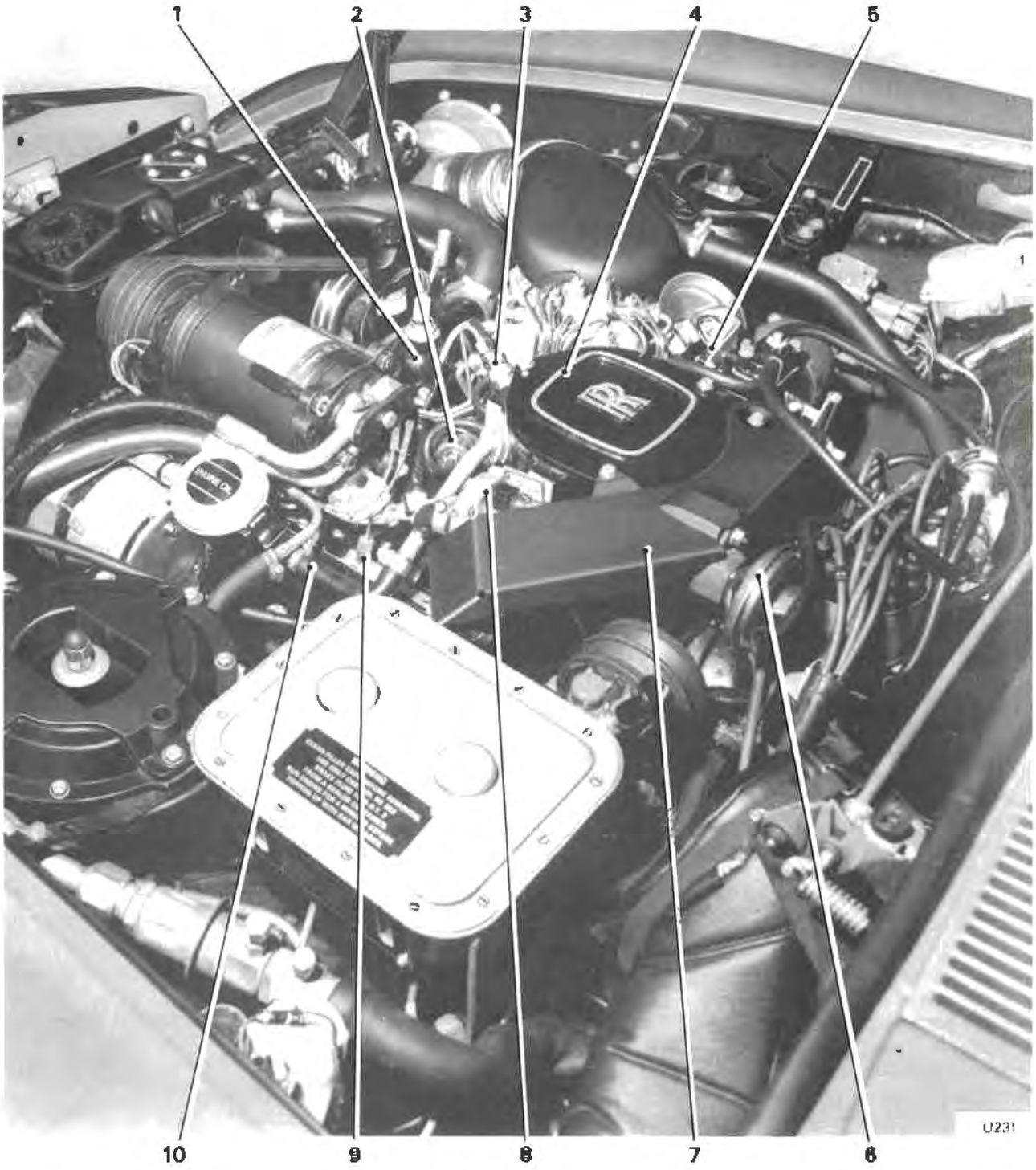

Fig. U2 Engine compartment details (Left-hand side)

1 Thermostat cover
2 Pressure damper
3 Cold start injector
4 Plenum chamber cover
5 'Closed loop' and E.G.R. cut-out micro-switch
6 Exhaust gas recirculation (E.G.R.) valve
7 E.G.R. heatshield
8 Auxiliary air valve
9 Injector
10 Crankcase breather pipe

Printed in England
© Rolls-Royce Motors Limited 1980

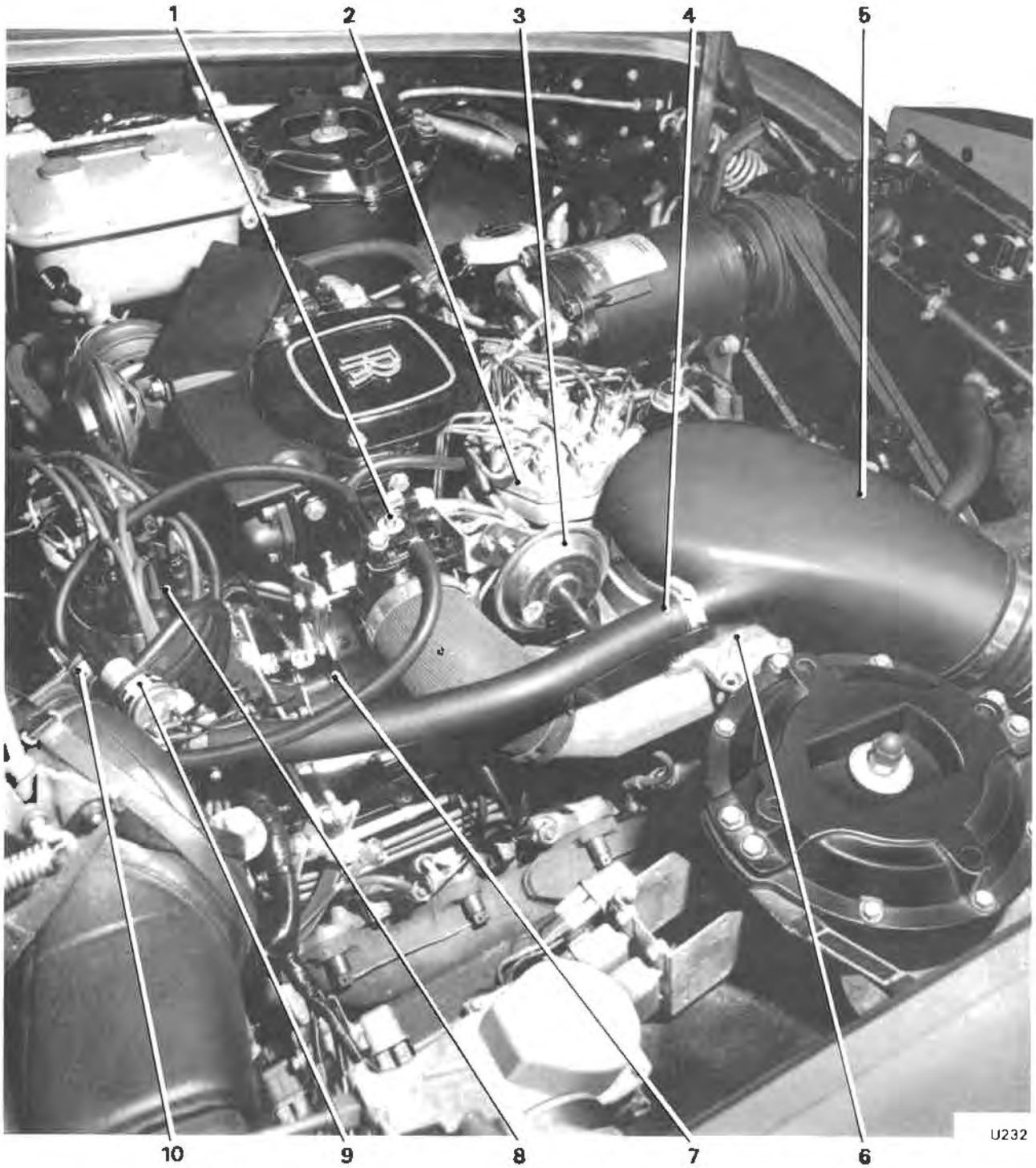

Fig. U3 Engine compartment details (Right-hand side)

1 Idle speed adjustment screw
2 Fuel distributor
3 Overrun valve
4 Crankcase breather pipe
5 Air intake
6 Air meter
7 Pressure control valve
8 Ignition distributor
9 Ignition vacuum retard cut-off solenoid
10 Exhaust gas recirculation cut-off solenoid

January 1980
T.S.D. 4200
(California
1980 Model year)

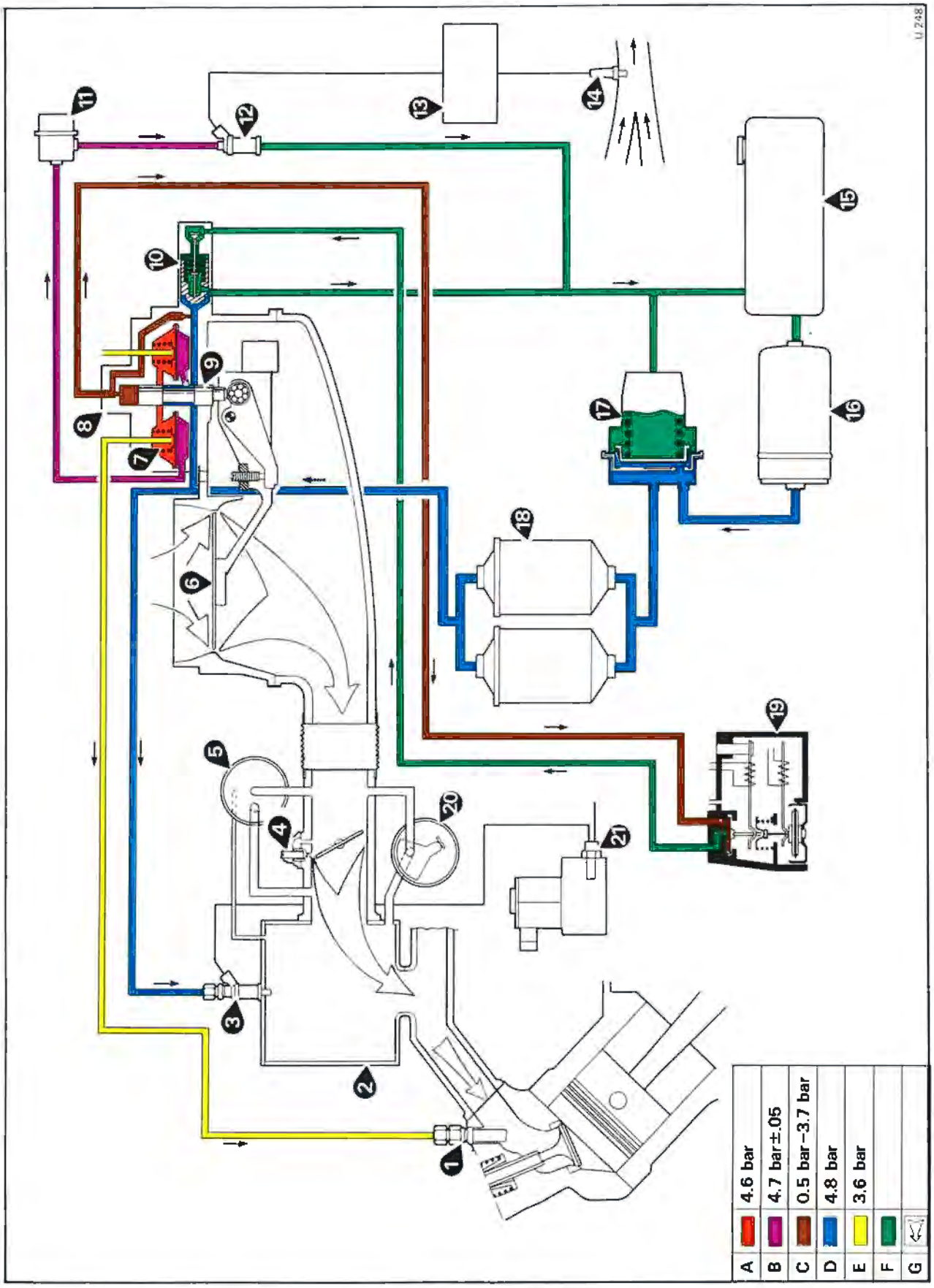

Fig. U4 Fuel injection system

Key to Fig. U4 Fuel injection system

1 Injector
2 Plenum chamber
3 Cold start injector
4 Idle speed adjustment screw
5 Overrun valve
6 Air sensor plate
7 Differential pressure valve
8 Fuel distributor
9 Control piston
10 System pressure regulator
11 Pressure damper
12 Pressure control valve
13 Electronic control unit
14 Oxygen sensor
15 Fuel tank
16 Fuel pump
17 Fuel accumulator
18 Fuel filters
19 Warm-up regulator
20 Auxiliary air valve
21 Thermal time switch
A Upper chamber pressure
B Lower chamber pressure (variable)
C Control pressure
D System pressure
E Injection pressure
F Unpressurised
G Intake air

The voltage to operate the fuel pump is fed from a relay which is triggered by pulses from the ignition. This relay is by-passed during engine cranking to provide an immediate fuel supply. If however, the engine speed drops below 150 r.p.m. the relay de-energises and the pump stops operating. This ensures that in the event of an accident the fuel pump will not operate if the engine stops.

The fuel accumulator maintains pressure in the system after the engine has stopped (to ensure good hot starting).

The primary circuit fuel pressure is regulated by a plunger type valve to nominally 4,8 bar (70 lbf/sq.in.).

In the fuel distributor the fuel initially enters a passage which joins with the lower chambers of the differential pressure valves via a small fixed orifice (see Fig. U10).

When the engine is operating the fuel flows through the metering slits (machined into the barrel of the fuel distributor) to the upper side of the diaphragm in the differential pressure valves and then through injector lines to the injector valves.

The injector valves have an opening pressure of approximately 3,6 bar (52 lbf/sq.in.) and are designed to spray finely atomised fuel under all operating conditions.

From the primary fuel circuit a fuel line feeds the cold start injector.

When the engine is stopped, the primary system pressure regulator allows the system pressure to drop rapidly to a pressure governed by the fuel accumulator which is just below the injector opening pressure and maintains it at this level by sealing the return line to the fuel tank. This seal is effected by a rubber 'O' ring fitted to the valve which is compressed against the fuel distributor housing (see Fig. U8). Simultaneously a push valve, integral with the system pressure regulator closes and prevents leakage through the control circuit. This retention of fuel pressure in the system is important because during 'hot soak' conditions it prevents fuel vapourisation and subsequent poor hot starting. In addition, the sudden pressure drop at the fuel injectors (causing them to close) prevents 'dieseling' (i.e. the tendency of an engine to continue 'running-on' after the ignition has been switched off).

Control fuel circuit (see Fig. U4)

The control circuit provides the control pressure that acts upon the upper end of the control piston and provides the balancing force for the air load acting on the air sensor plate. In addition, it also provides a means of enriching the mixture for cold starting.

The control circuit is supplied with fuel from the primary circuit through a restrictor in the fuel distributor (see Fig. U9). The fuel then passes either into the chamber above the control piston via a damping restrictor or via an external connection to the warm-up regulator, where a control pressure of 3,7 bar (54 lbf/sq.in.) is maintained at normal engine operating temperature.

The pressure regulator in the warm-up regulator is tensioned by a bi-metal spring when the engine is cold, this in turn reduces the load on the regulating valve and correspondingly lowers the control pressure.

With a lower control circuit pressure, the air flow sensor plate is allowed to travel further downwards in the air funnel for a given rate of air consumption which in turn, moves the control piston further up in the barrel of the fuel distributor, increasing the opening of the fuel metering slits and thereby enriching the mixture.

The bi-metal of the warm-up regulator is heated electrically whenever the engine is running, this causes the effect of the bi-metal to be reduced with a corresponding reduction in the amount of mixture enrichment.

The warm-up regulator is mounted so that it can assume the temperature of the engine. Therefore, when the engine is started in the 'semi-warm' condition, unnecessary enrichment of the air/fuel mixture is avoided.

Fuel from the warm-up regulator flows through the push valve assembly which assists in maintaining the pressure by closing the primary circuit when the engine is switched off. Excess fuel flows around the push valve and into the fuel tank return line which is not under pressure (see Fig. U4).

Printed in England
© Rolls-Royce Motors Limited 1980
January 1980
T.S.D. 4202
(California
1980 Model year)

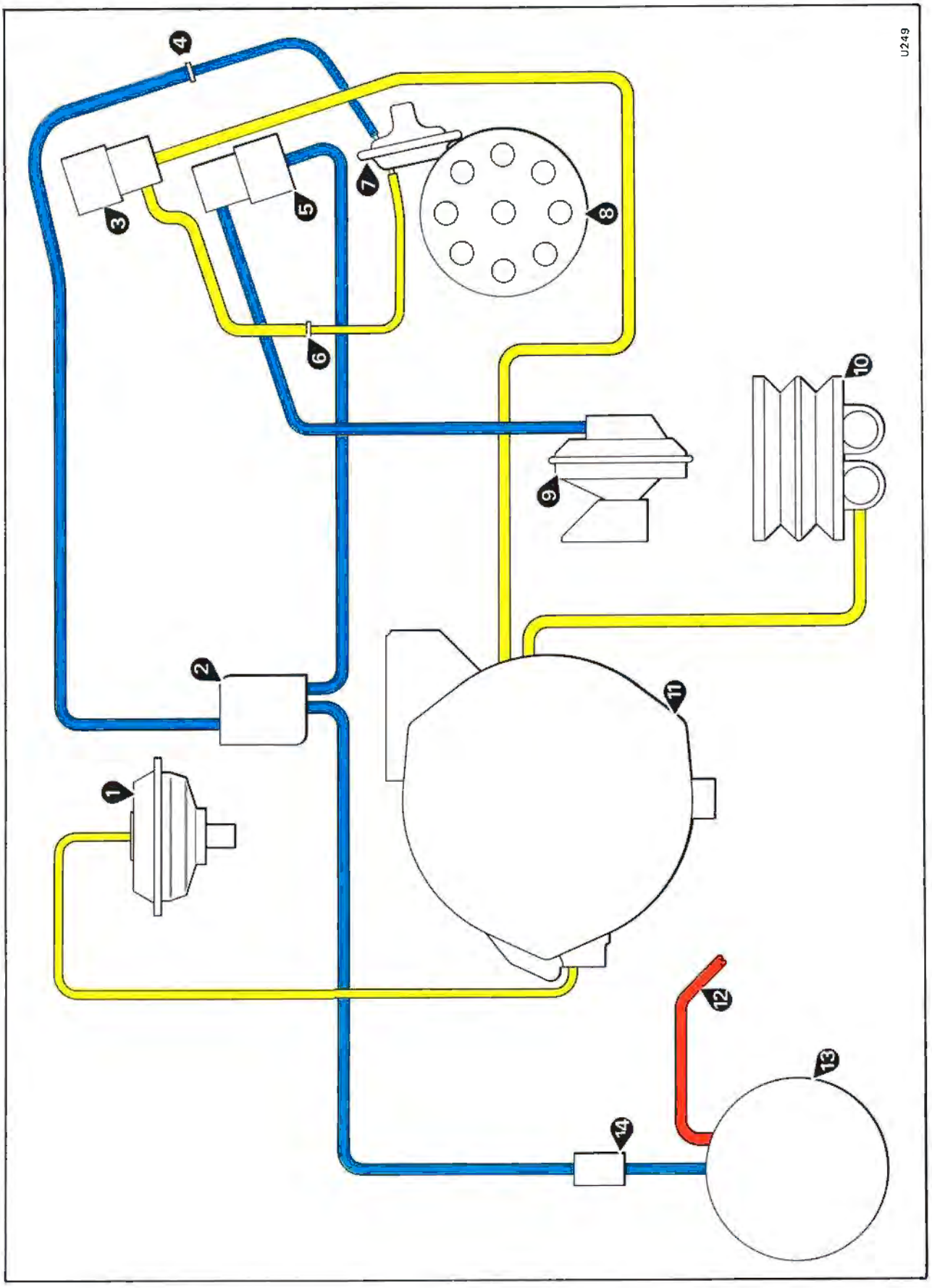

Fig. U5 Vacuum hose routing diagram

Printed in England
© Rolls-Royce Motors Limited 1980
January 1980
T.S.D. 4200
(California
1980 Model year)

Key to Fig. U5 Vacuum hose routing diagram

1 Overrun valve
2 Throttle body
3 Ignition vacuum retard cut-off solenoid
4 Vacuum advance signal hose adapter
5 E.G.R. valve cut-off solenoid
6 Vacuum retard signal hose adapter
7 Vacuum advance/retard capsule
8 Ignition distributor
9 Exhaust gas recirculation (E.G.R.) valve
10 Speed control unit
11 Plenum chamber
12 Hose to fuel tank vent
13 Purge line restrictor
14 Fuel evaporative emission control canister

Fuel distribution (see Fig. U4)

To ensure that the fuel is uniformly distributed to the cylinders a control piston and barrel assembly is used (see Fig. U15). This assembly operates by controlling the open cross sectional area of the metering slits machined in the barrel.

The barrel has one slot shaped opening (the rectangular metering slit) for each cylinder. Each metering slit has a differential pressure valve to hold the drop in pressure at the metering slits constant at the various flow rates. As a result possible effects of variations in the primary system pressure and differences in the opening pressure of the injector valves are eliminated.

With a constant drop in pressure at the metering slits, the amount of fuel flowing to the injector valves depends solely upon the open cross sectional area of the slits.

Differential pressure valves (see Figs. U4 and U10)

There is a differential pressure valve for each engine cylinder. The valve is a diaphragm type consisting of an upper and lower chamber with the diaphragm separating the two halves (see Fig. U10). The basic principle of operation is that the fuel pressure in the upper chamber is at approximately 0,1 bar (1.5 lbf/sq.in.) less than the pressure in the lower chamber. The pressure differential is produced by the helical spring built into the upper chamber. Under these conditions equilibrum of forces exists at the diaphragm.

If additional fuel flows through the metering slit into the upper chamber, the pressure rises temporarily. This increase in pressure will force the diaphragm downwards until a differential pressure of 0,1 bar (1.5 lbf/sq.in.) again prevails at the metering slit.

At higher rates of fuel flow, the diaphragm opens a larger annular cross section, so that the pressure

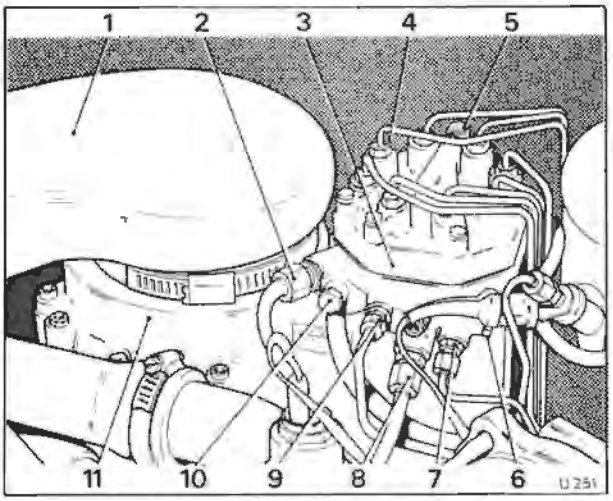

Fig. U6 Mixture control unit

1 Air intake
2 Fuel supply to distributor
3 Fuel distributor
4 Fuel feed to injector
5 Fuel feed to warm-up regulator
6 System pressure regulator
7 Fuel return from warm-up regulator
8 Fuel return to tank
9 Fuel feed to cold start injector
10 Fuel feed to pressure control valve (via pressure damper)
11 Air meter

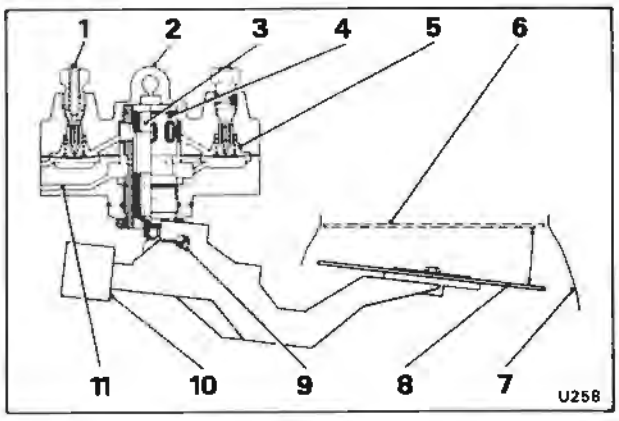

Fig. U7 Air flow sensor and fuel distributor (mixture control unit)

1 Fuel feed pipe to injector
2 Fuel distributor assembly
3 Control piston
4 Fuel distributor barrel
5 Differential pressure valve
6 Position of air sensor plate at idle speed
7 Air meter
8 Air flow sensor plate
9 Pivot
10 Counterbalance weight
11 Fuel inlet

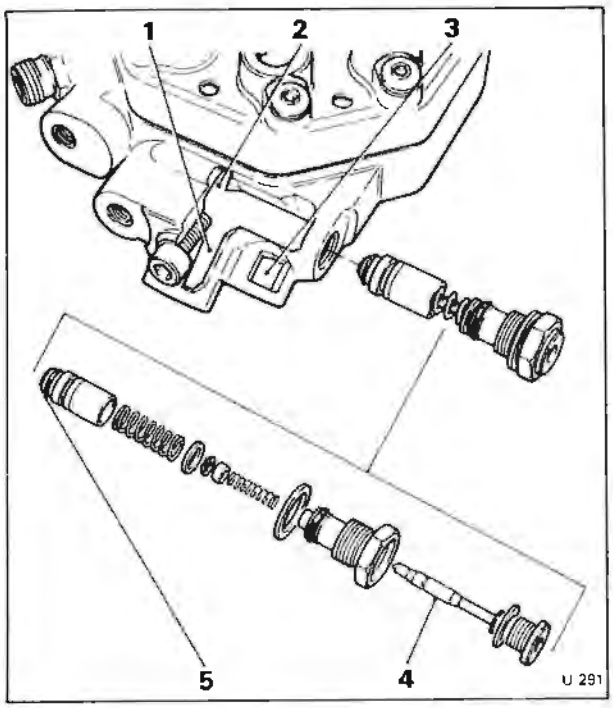

Fig. U8 System pressure regulator
1 Fuel return to tank
2 System pressure line
3 Fuel return from warm-up regulator
4 Push valve
5 Regulator valve sealing face

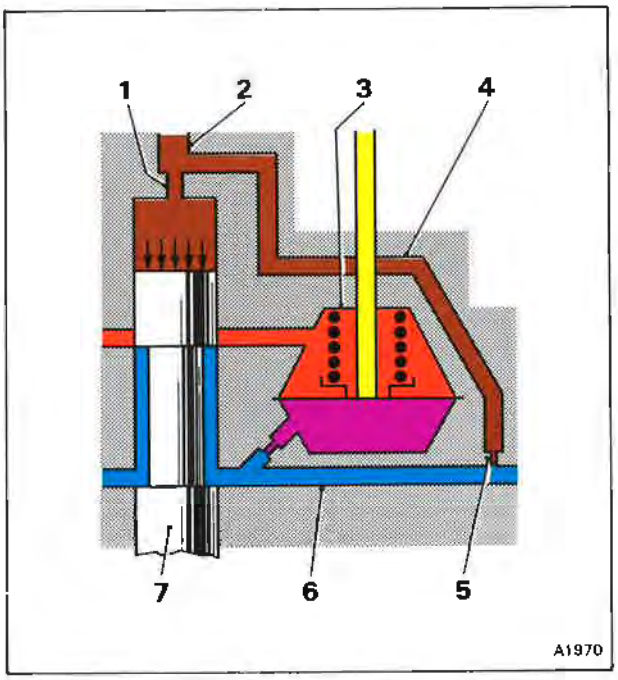

Fig. U9 Relationship between primary circuit pressure and control pressure
1 Damping restrictor
2 Fuel feed to warm-up regulator
3 Differential pressure valve
4 Control circuit pressure
5 Control circuit restrictor
6 Primary circuit pressure
7 Control piston

differential remains constant. If the rate of fuel flow decreases, the diaphragm reduces the amount of fuel flowing into the injector line.

The total travel of the diaphragm is only a few hundredths of a millimetre.

(The fuel pressure in the lower system and therefore, the pressure differential between the two halves of the chamber is affected slightly by the operation of the lambda control system.)

'Closed loop' mixture control system (Lambda control system) (see Fig. U4)

The lambda control system is an addition to the K-Jetronic fuel injection system and is fitted to give accurate control of the air/fuel ratio about the stoichiometric value which is necessary to achieve efficient operation of the three-way exhaust catalytic converter.

The control principle is based on the fact that by means of the oxygen sensor the exhaust is continuously monitored and the amount of fuel fed to the engine is continuously corrected.

With an ideal (Stoichiometric) air/fuel mixture the air factor is identified by the value* λ=1. At this mixture ratio the output signal from the oxygen sensor develops a voltage jump which is processed by the electronic control unit. This voltage changes sharply for small deviations from the stoichiometric mixture (the air/fuel ratio for full combustion of the fuel). The electronic unit therefore, controls the injection system for 'closed-loop' fuel metering by modulating the signal to the pressure control valve which in turn, affects the pressure in the lower chambers of the differential pressure valves.

By responding to the unconsumed oxygen content of the exhaust gas, the sensor registers the extent of complete combustion and regulates the air/fuel mixture to the ideal or stoichiometric ratio.

$$\lambda = \frac{\text{Actual intake air}}{\text{Theoretical requirement}}$$

Description of the components

Injector (see Fig. U11)

An injector is fitted into the induction system just behind each inlet valve. The injector opens automatically when the fuel pressure in the injection lines reaches 3,6 bar (52 lbf/sq.in.). It has no metering functions, its purpose being to continually spray finely atomised fuel under all running conditions. The injector is supported in a specially shaped moulded rubber sleeve, it is pressed not

Printed in England
© Rolls-Royce Motors Limited 1980

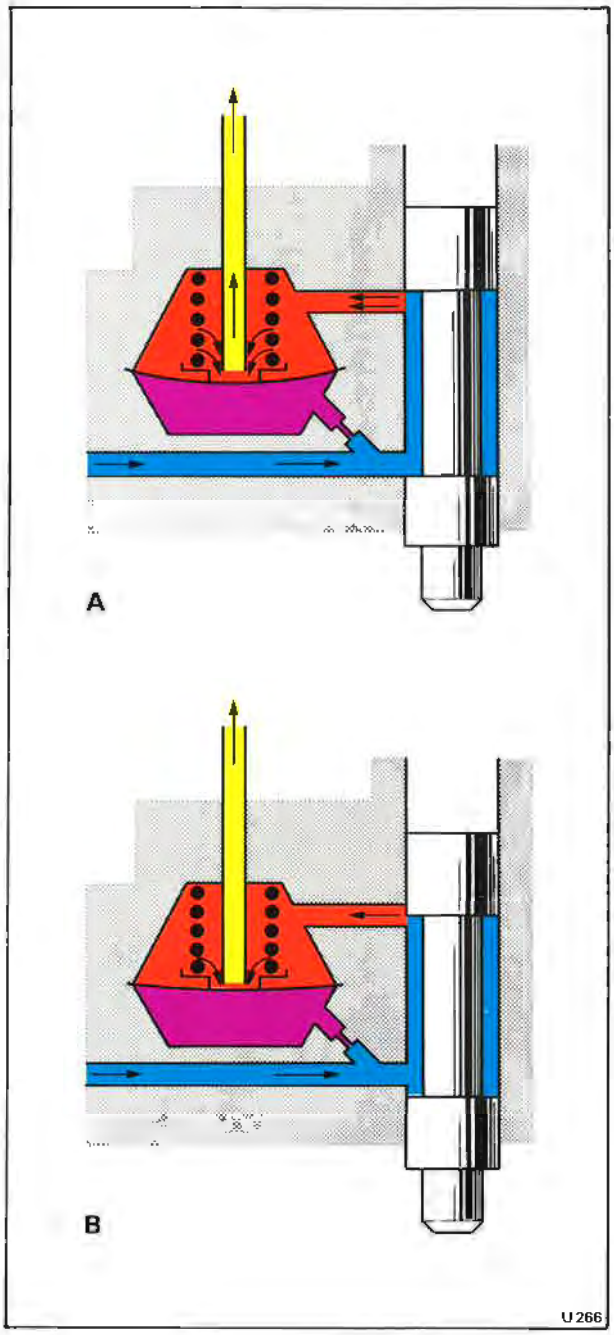

Fig. U10 Differential pressure valve
Diagram A - High flow rate
Diagram B - Low flow rate

screwed, into position. The hexagonal section is provided to hold the injector while the fuel line is attached. A retention plate is fitted over the injector and secured to the cylinder head by two small setscrews, each plate retains two injectors.

Plenum chamber
This chamber is mounted centrally over an eight branch induction manifold, it is filled with air ready for induction into the engine.

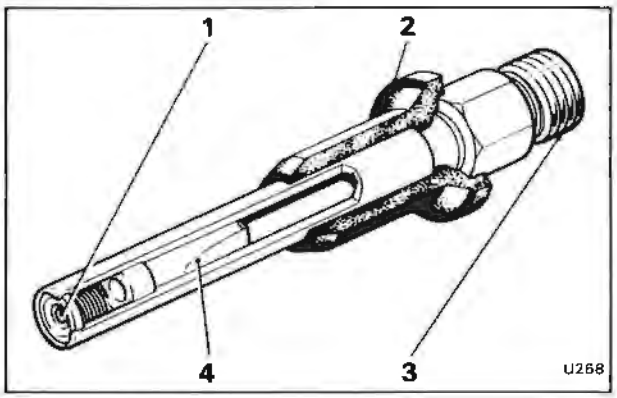

Fig. U11 Injector
1 Nozzle
2 Insulating sleeve
3 Fuel supply connection
4 Filter

Cold start injector (see Fig. U12)
In order to facilitate engine starting particularly from low ambient temperatures, a cold start injector is fitted into the plenum chamber and sprays additional finely atomized fuel during engine cranking. A thermal time switch mounted in the thermostat housing controls the operation of the cold start injector. This injector ceases to operate when the ignition key is released from the 'START' position.

In the cold start injector a helical spring presses the movable armature and seal against the valve seat, closing the fuel inlet. When the armature is energised (and therefore drawn upwards) the fuel port is opened and the pressurised fuel flows along the sides of the armature to the swirl nozzle.

Idle speed adjustment screw (see Fig. U13)
This adjustment screw is situated on top of the throttle body and allows limited adjustment of the engine idle speed. During manufacture of the vehicle the engine idle speed is set using the throttle butterfly valve adjusting screw. The screw is situated on the side of the throttle body and is sealed after the initial adjustment. Afterwards, adjustment to the engine idle speed is by means of the idle air bleed screw situated on top of the throttle bedy, this screw is the only means of limited adjustment to the engine idle speed.

Overrun valve (see Fig. U14)
During engine overrun (i.e. when decelerating with a closed throttle) insufficient mixture is supplied to the engine to maintain satisfactory combustion. The overrun valve alleviates this condition by allowing some air to by-pass the closed throttle plate when a high intake manifold depression exists.

When the throttle plate is closed suddenly, the high manifold depression signal generated in the

January 1980
T.S.D. 4200
(California
1980 Model year)

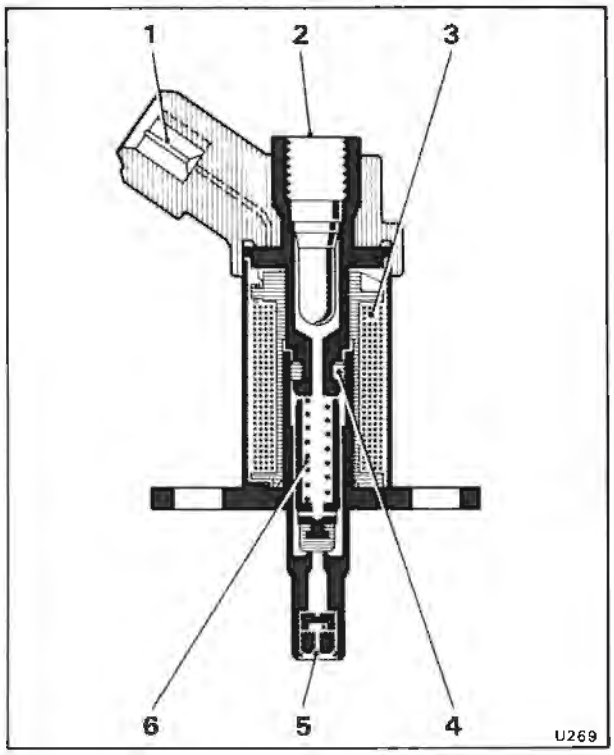

Fig. U12 Cold start injector
1 Electrical connection
2 Fuel inlet
3 Magnetic coil
4 Sealing ring
5 Swirl nozzle
6 Armature

plenum chamber is transmitted via a hose to the housing of the overrun valve. This signal deflects a diaphragm against a return spring and simultaneously allows a spring loaded valve to open the air intake connection of the overrun device. This in turn permits air which is monitored by the air sensor plate to by-pass the throttle plate and a corresponding amount of fuel is metered by the fuel distributor. Satisfactory combustion is therefore maintained which reduces hydrocarbon emissions and controls catalyst temperatures. As soon as the manifold depression falls below a predetermined value, the return spring pushes the diaphragm back closing the overrun valve.

Air flow sensor plate (see Fig. U7)
The sensor plate is housed in the air venturi of the air meter. Its function is described on Page U2 - 3 under the heading of 'Air flow sensing'.

Differential pressure valves (see Fig. U10)
The differential pressure valves (one for each engine cylinder) are housed in the fuel distributor. Their function is described on Page U2 - 9 under the heading 'Differential pressure valves.

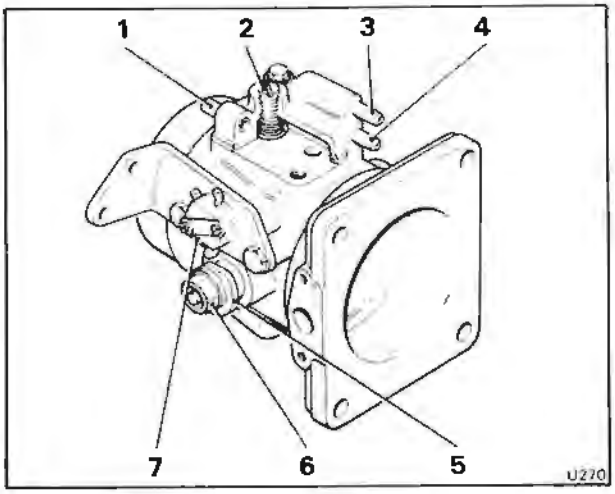

Fig. U13 Throttle body
1 Ignition distributor vacuum advance signal connection
2 Idle speed adjusting screw
3 E.G.R. signal connection
4 Evaporative emission control canister purge connection
5 Micro-switch actuating cam
6 Throttle spindle nut
7 'Closed loop' and E.G.R. cut-out micro-switch

Fuel distributor (see Fig. U7)
The fuel distributor forms part of the mixture control unit. Its function is described in the sections 'Description of the system' and 'Fuel circuit'.

Control piston (see Figs. U7 and U15)
This is a cylindrical plunger type of valve that moves vertically in the fuel distributor. It is operated by a lever connected to the air flow sensor plate.

A precision machined edge on the control piston opens the fuel metering slits in the fuel distributor barrel and therefore, controls the amount of fuel injected into the engine cylinders.

System pressure regulator (see Fig. U8)
When the engine is operating this regulator maintains a constant primary circuit fuel pressure. When the engine is stopped, the regulator valve allows the fuel pressure in the primary circuit to fall rapidily to just below the injector opening pressure. In addition, the push valve (the small valve on the outer end of the regulator) closes and prevents leakage from the control circuit.

Pressure damper (see Fig. U16)
This assembly is designed to 'damp' the pressure pulses caused by the operation of the pressure control valve.

Printed in England
© Rolls-Royce Motors Limited 1980

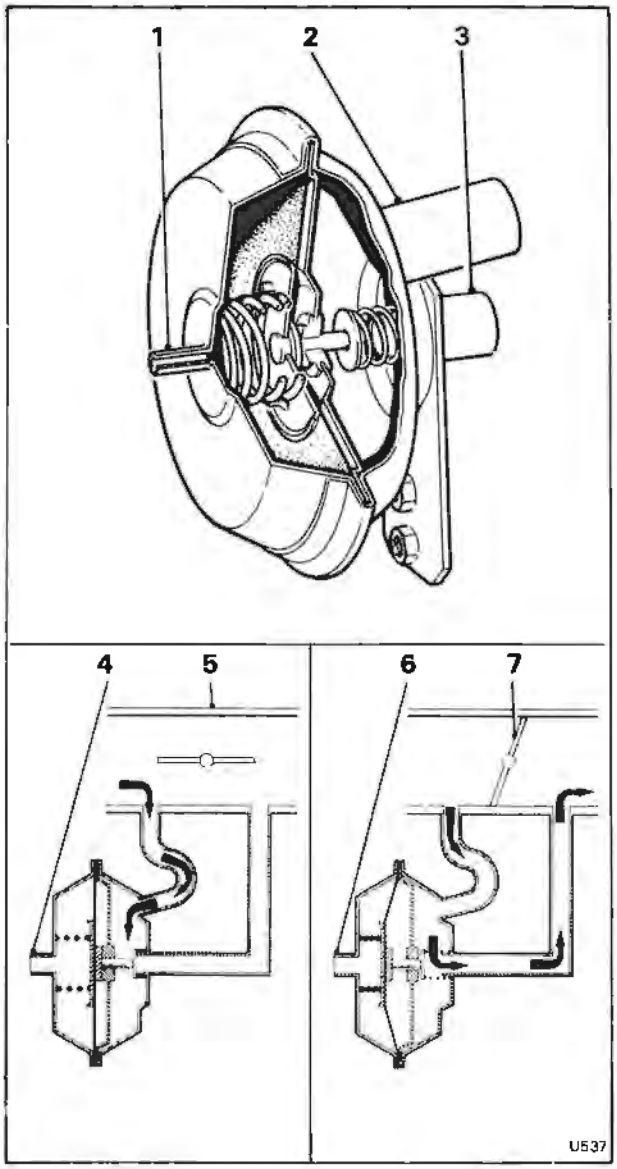

Fig. U14 Overrun valve
1 Vacuum signal from plenum chamber
2 Downstream throttle air return
3 Upstream throttle air intake
4 Weak vacuum signal
5 Throttle body
6 Strong vacuum signal
7 Throttle valve

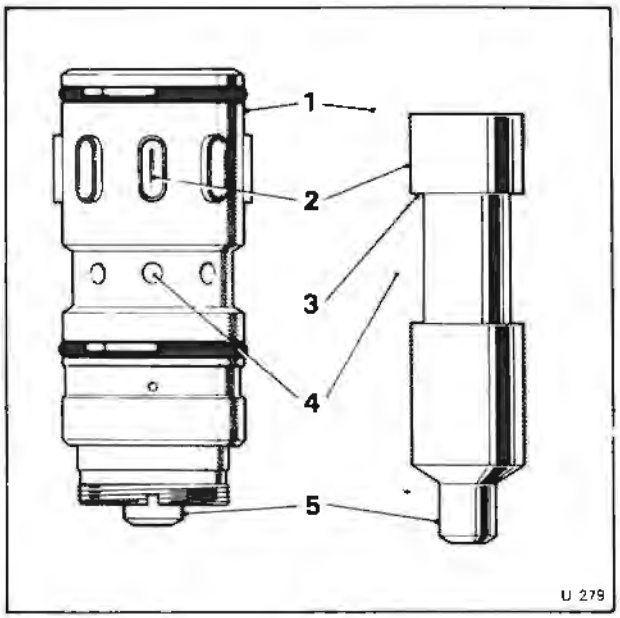

Fig. U15 Fuel distributor barrel and control piston
1 Fuel distributor barrel
2 Fuel metering slits
3 Piston control edge
4 Fuel inlet ports
5 Control piston

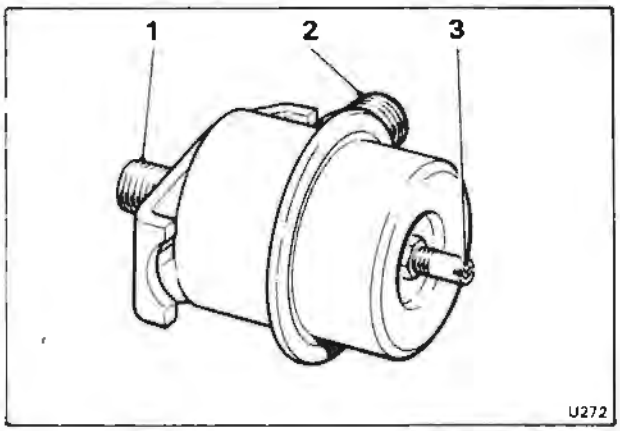

Fig. U16 Pressure damper
1 Fuel feed from distributor
2 Fuel supply to pressure control valve
3 Vent hose to oil filler housing

Pressure control valve (see Fig. U17)
This valve is operated by an electrical signal received from the electronic control unit.

The pressure control valve receives square-wave pulses of constant frequency(70 cycles per second) but of variable width (i.e. the proportion of time that the valve remains open during any one cycle is variable, controlling the flow rate through the valve). This action varies the fuel pressure in the lower chambers of the differential pressure valves.

Electronic control unit (see Fig. U18)
The electronic control unit, converts the electrical signal from the oxygen sensor into a hydraulic correction of the fuel mixture. This is achieved by the signal it transmits to the pressure control valve.

The oxygen sensor reacts to a change from a weak to a rich mixture with a voltage jump which is processed by the electronic control unit.

As a result of this change to a richer mixture, the control unit changes the open-closed ratio of the

January 1980
T.S.D. 4200
(California
1980 Model year

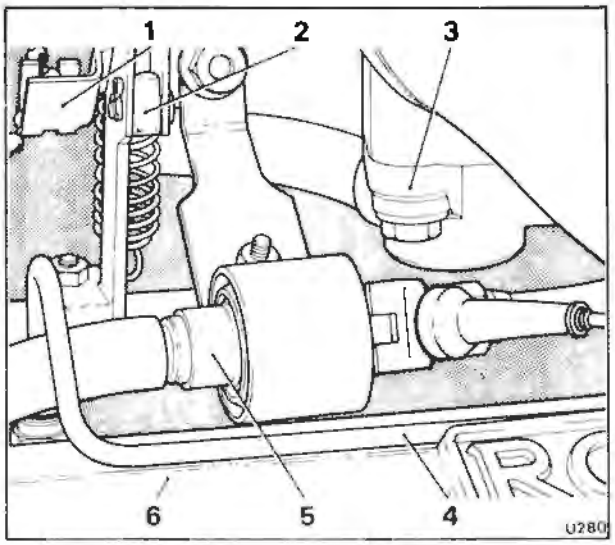

Fig. U17 Pressure control valve

1 Speed control throttle connection
2 Throttle lever
3 Throttle body
4 Injector pipe
5 Pressure control valve
6 'A' bank rocker cover

pressure control valve smoothly towards a weaker mixture,until the oxygen sensor reacts to the resulting weaker mixture. This develops a voltage jump in the opposite direction, causing the open-closed ratio of the pressure control valve to be changed in the richer mixture direction.

To avoid driving continuously with a weak mixture if the oxygen sensor malfunctions, the control operation is periodically monitored within specified fixed time spans and, in the event of a defect, the control operation is switched to the 'internal-signal mode'. When in this operating mode the pressure control valve receives a constant pulse signal to control the on-off ratio. In addition a warning lamp situated on the facia will be illuminated to indicate that attention is necessary.

In addition to the basic function of the electronic control unit to evaluate the signal from the oxygen sensor, it also performs the following additional functions.

Until the oxygen sensor attains its operating temperature, a control function cannot take place. Therefore, during this warm-up period the electronic control unit is switched to the 'internal-signal mode' ('open loop control').

When it is necessary for the engine to operate under full load conditions it is also desirable to switch from the 'external-signal mode' or 'closed loop control'. This is achieved by a cam, situated on the side of the throttle housing activating a micro-switch and thereby, switching the electronic control unit into the 'internal-signal mode'.

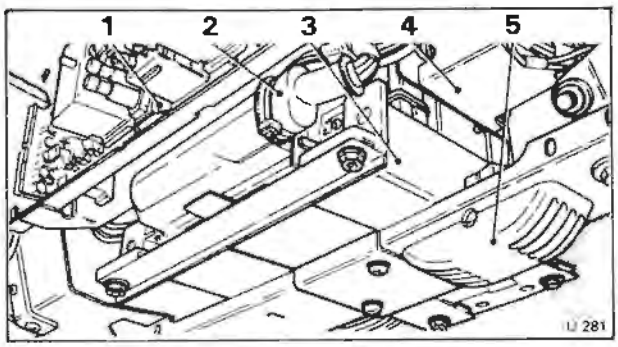

Fig. U18 Electronic control unit

1 Fuseboard
2 Control unit electrical connector
3 Electronic control unit
4 ' Engine running' sensor
5 Knee roll sensor (Auto A.C.U.)

Simultaneously, the electronic control unit modifies the signal to the pressure control valve to provide the additional enrichment required for satisfactory engine operation at full throttle.

Oxygen sensor (see Fig. U19)

The oxygen sensor measures the oxygen content in the exhaust gas and by means of an electrical signal transmits the information to the electronic control unit.

The assembly consists of a sintered zirconium dioxide ceramic, impregnated with certain metal oxides. The surfaces of the tube are coated with a thin layer of platinum. In addition, a porous ceramic layer is applied to the outer side which is exposed to the exhaust gas. The surface of the hollow inner side of the ceramic tube is in contact with the ambient air.

When in position, the ceramic sensor tube is subjected to the exhaust gas on the outside, whilst ambient air is allowed to pass inside the sensing tube. If the oxygen concentration inside the sensor differs from that outside, a voltage is generated between the two boundary surfaces due to the characteristics of the material used. This voltage is a measure of the difference in the oxygen concentration inside and outside the sensor.

The ceramic sensor tube exhibits a steep change in signal output (approximately 1 000 mv) when stoichiometric conditions are approached (see Fig. U20).

The oxygen sensor will only exhibit this steep change in signal output when a certain pre-determined operating temperature is attained.

When starting the engine, particularly from cold, satisfactory 'closed loop control' is not possible. During these conditions the electronic control unit supplies a fixed on-off ratio signal ('internal-signal mode') until the oxygen sensor attains its operating

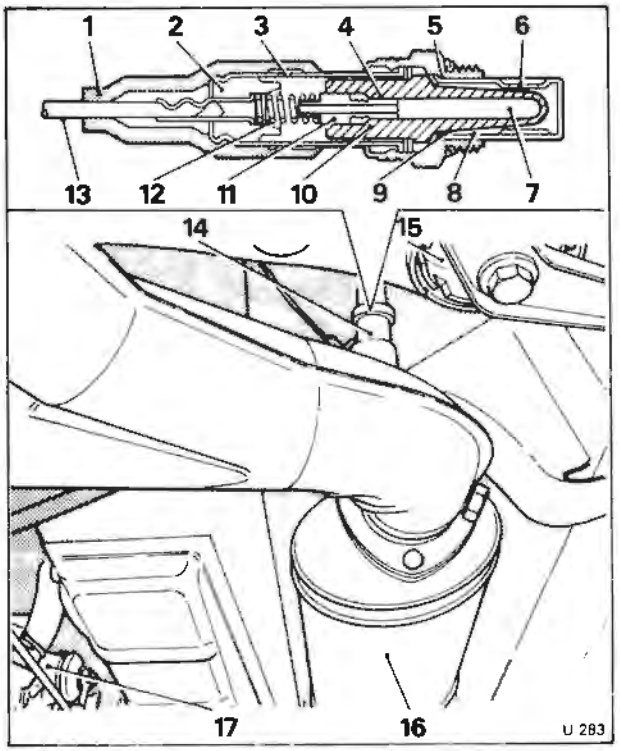

Fig. U19 Oxygen sensor

1 Protective cap
2 Ceramic insulator
3 Air intake opening
4 Internal electrical conductive layer
5 Protective tube
6 Exhaust gas intake slots
7 Air side
8 Exhaust gas side
9 External electrical conductive layer
10 Ceramic sensor body
11 Contact bushing
12 Contact spring
13 Connection lead
14 Oxygen sensor
15 Front sub-frame rear mount
16 Catalytic converter
17 Transmission actuator

temperature, otherwise driveability would be impaired at this time without the regulating effect of control valve operation. If the oxygen sensor fails to function, this fixed on-off ratio signal is transmitted to the control valve in addition to illuminating a warning lamp on the facia.

Fuel tank (see Fig. U21)

The fuel tank is situated behind the rear seats. It is sealed by a ratchet type of screw-on filler cap which incorporates a combined pressure and vacuum relief valve.

In the upper part of the fuel tank assembly is located an expansion tank. This inhibits complete filling of the tank and provides fuel expansion

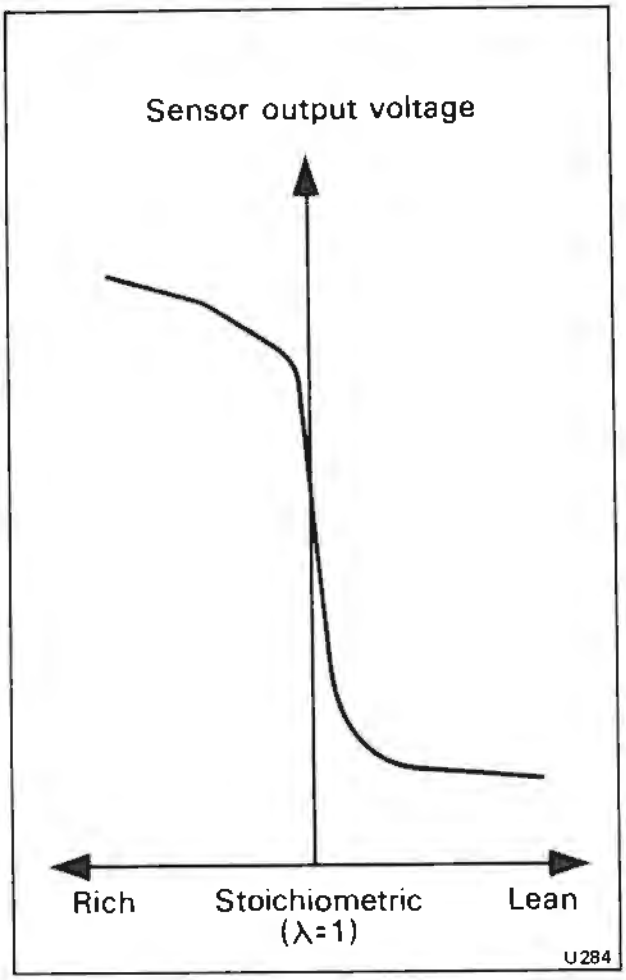

Fig. U20 Typical sensor output signal

volume to cope with variations in ambient temperature.

To prevent air entering the fuel supply line a 'swirl pot' is fitted into the base of the fuel tank. Fuel returning to the tank via the fuel recirculation pipe is fed through a venturi into the swirl pot. The effect of the venturi is to continually top-up the 'swirl pot' even when there is a low fuel level in the tank, the swirling action that follows assists to de-aerate the fuel prior to its circulation within the system.

Fuel pump (see Fig. U22)

The fuel pump is a roller cell type of pump driven by a permanent magnetic motor. A rotor disc, mounted on the motor shaft, is fitted with metal rollers in the notches around its circumference. These rollers are forced against the excentrically designed pump housing by centrifugal force and seal the individual fuel compartments (cells). Fuel is carried in the fuel compartments (cells) between the metal rollers and is forced into the fuel line to the fuel accumulator.

The pump delivers more fuel than is required.

Printed in England
© Rolls-Royce Motors Limited 1980
January 1980
T.S.D. 4200
(California
1980 Model year)

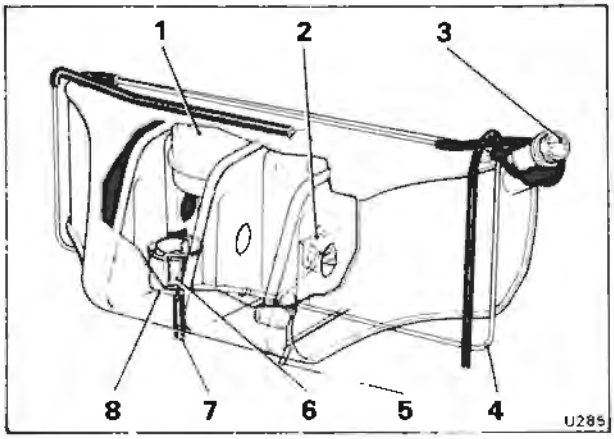

Fig. U21 Fuel tank

1 Expansion tank and overfill limiter
2 Fuel level indicator
3 Fuel filler cap (incorporating combined pressure and vacuum relief valve)
4 Rollover tube
5 Fuel return
6 Filter
7 Fuel feed
8 Swirl pot

Therefore, the excess is diverted from the primary circuit by the pressure regulator and is returned to the fuel tank.

Fuel accumulator (see Fig. U23)

The fuel accumulator is divided by a diaphragm into the accumulator chamber and the spring chamber. In front of the diaphragm is a steel partition with a plate valve for fuel intake and a restricted bore for the fuel outlet. The diaphragm chamber is filled through the plate valve and a large hole. The diaphragm is forced downwards against the pressure of the spring until it reaches the spring plate limit stop, formed on the inside of the accumulator casing and remains in this position whilst the engine is operating

When the engine stops, fuel flows from the accumulator into the system through the restriction under the pressure of the accumulator spring. This maintains pressure in the primary fuel circuit to ensure good 'hot starting'.

Fuel filters (see Fig. U24)

Twin filters are fitted into the fuel feed line. Each filter contains a paper element and a fine mesh screen. The paper filter is used to trap any dirt in the fuel. The fine mesh screen catches any particles which may be released by the paper cartridge.

Due to the construction of the filter it is most important that the direction of flow marked on the filter housing is strictly adhered to.

Warm-up regulator (see Fig. U25)

The purpose of the warm-up regulator is to increase

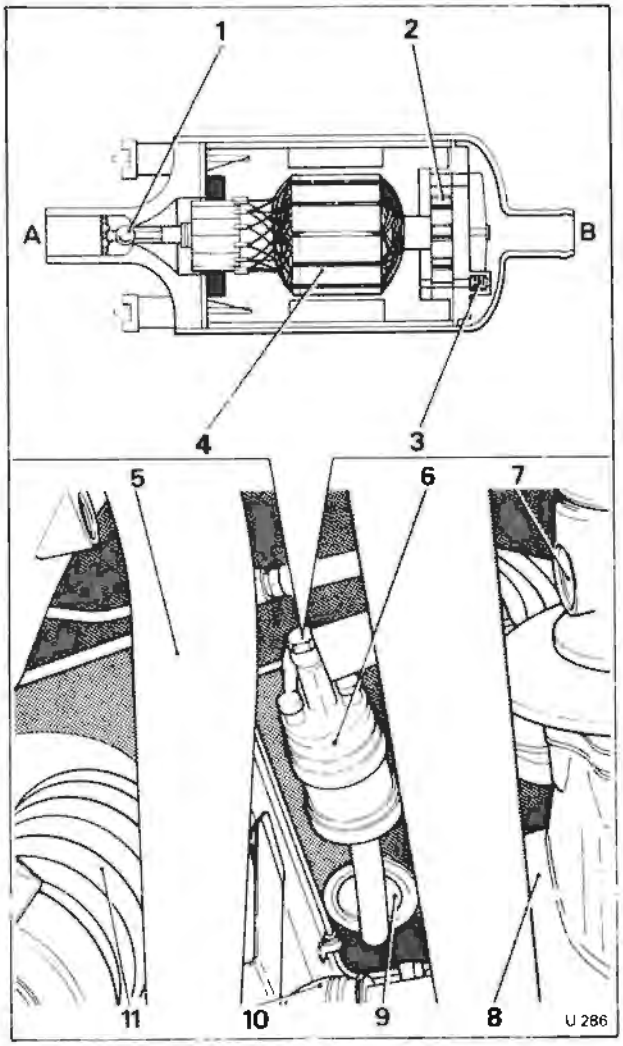

Fig. U22 Fuel pump

1 One-way valve
2 Roller cell
3 Safety valve
4 Armature
5 Exhaust pipe
6 Fuel pump
7 Propeller shaft
8 Final drive unit
9 Fuel tank feed connection
10 Drive-shaft
11 Rear road spring

A Pressure side
B Intake side

the control pressure as the engine warms-up, so that at normal operating temperature full control pressure is exerted on the end of the control piston.

The unit is operated by a bi-metal strip which in the cold conditions acts against the delivery valve spring and so determines the control pressure. When the engine is started, this bi-metal strip is electrically heated and releases the delivery valve spring which in turn allows the spring pressure to

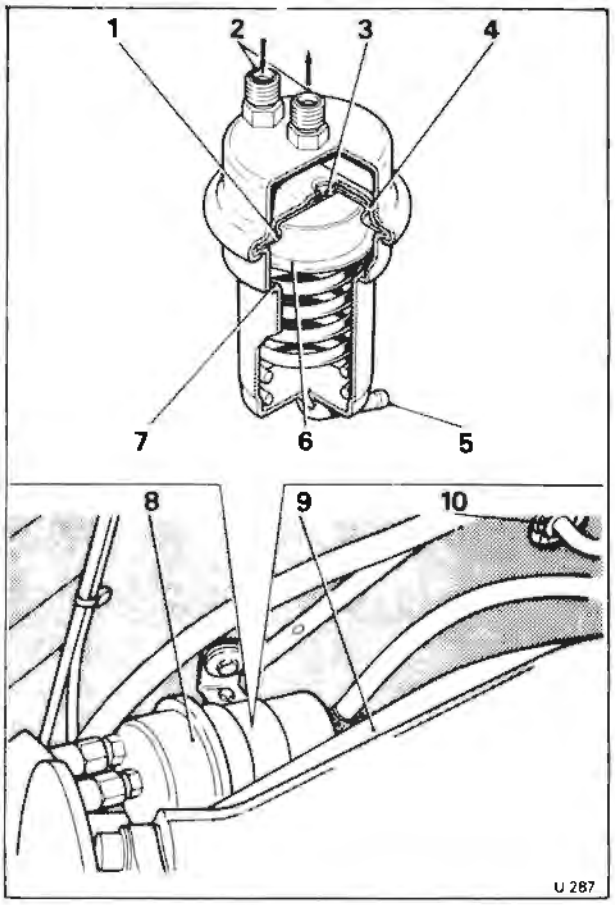

Fig. U23 Fuel accumulator
1 Diaphragm
2 Fuel connections
3 Depressurisation restrictor
4 Upper limit stop
5 Vent pipe to fuel tank
6 Spring plate
7 Lower limit stop
8 Fuel accumulator
9 Final drive unit
10 Fuel tank return connection

close the fuel passage and increase the control pressure.

Also located in the warm-up regulator assembly is an aneroid cell which slightly adjusts the control pressure for mixture compensation at high altitudes.

The warm-up regulator is located so that it will assume the temperature of the engine, this ensures that the mixture is not over enriched when starting a partially warmed-up engine.

Auxiliary air valve (see Fig. U26)
When the engine is cold the auxiliary air valve supplies a larger volume of air to the engine than is dictated by the position of the throttle butterfly valve. The air passes through a hole in a pivoted blocking plate situated between the inlet and outlet connections. The movement of the blocking plate is dependent upon an electrically heated bi-metal strip.

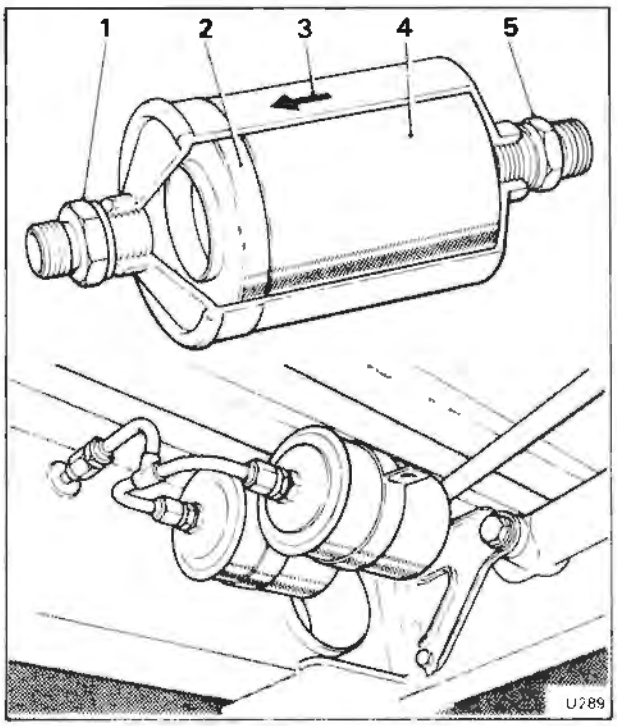

Fig. U24 Fuel filters
1 Outlet connection
2 Plastic mesh screen
3 Direction of flow arrow
4 Paper filter element
5 Inlet connection

When starting a cold engine the blocking plate is in the open position. However, as the bi-metal strip warms-up it progressively relaxes its force on the plate, allowing the return spring to pull the plate to the closed position. This reduces the engine speed to the normal idle speed setting.

Thermal time switch (see Fig. U27)
The thermal time switch limits the length of time that the cold start injector remains open. During engine cranking the heating coil inside the switch causes the bi-metal contact to open which in turn, switches off the cold start injector.

The switch is mounted in the thermostat housing and inhibits operation of the cold start injector above a pre-determined coolant temperature.

Electrical circuit and System warning device

Electrical circuit (see Fig. U28)
The electrical components associated with the fuel injection system comprise the following main circuits.
'Engine running' sensor and fuel pump.
Cold start injector and thermal time switch.
Exhaust gas recirculation (E.G.R.) inhibit.
Ignition distributor vacuum retard.

Printed in England
© Rolls-Royce Motors Limited 1980
January 1980
T.S.D. 4200
(California
1980 Model year)

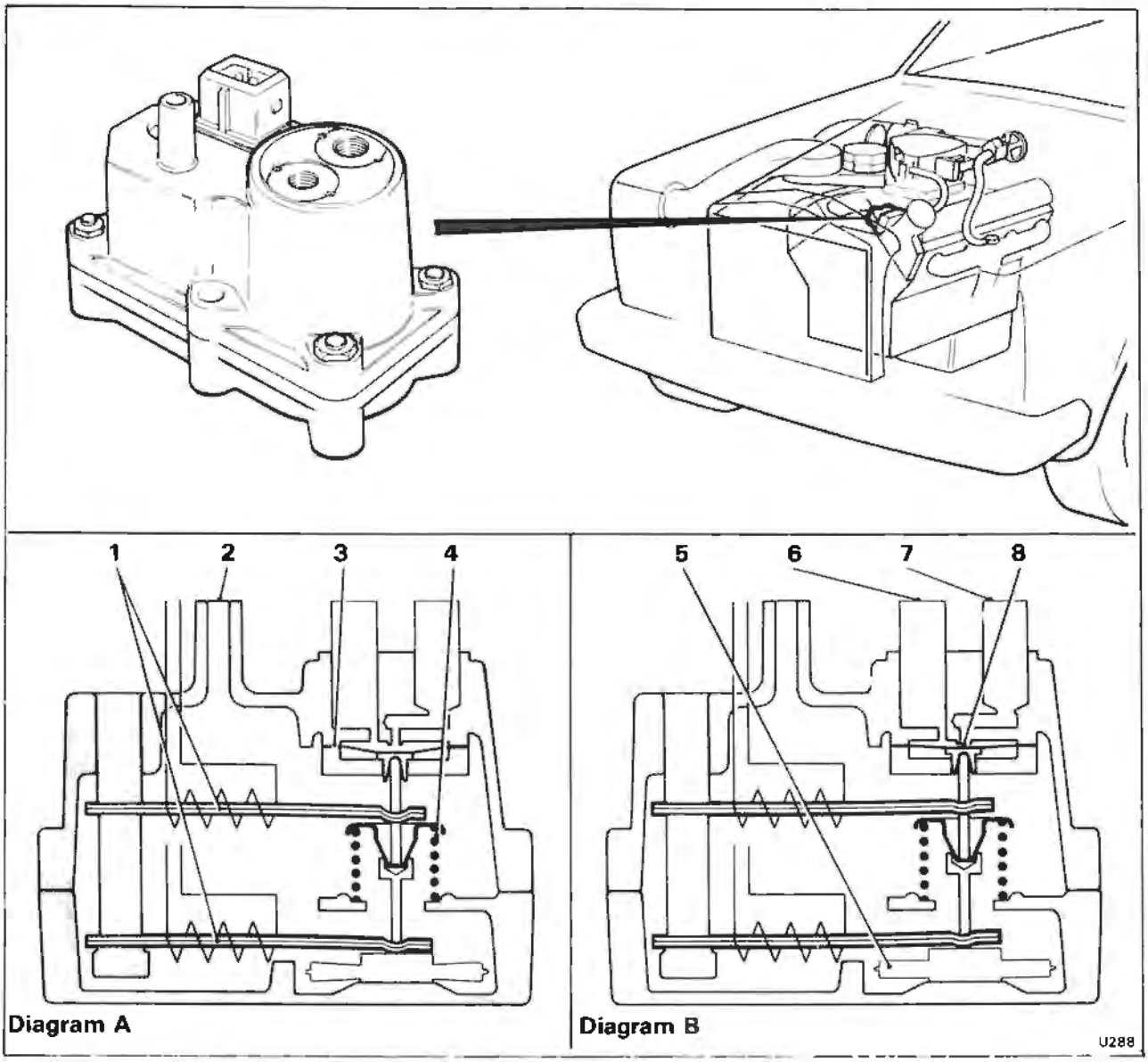

Fig. U25 Warm-up regulator

Diagram A - Cold engine
Diagram B - Warm engine
1 Bi-metal strips with heater elements
2 Vent to atmosphere
3 Diaphragm
4 Return spring
5 Aneroid cell
6 Fuel inlet connection
7 Fuel outlet connection
8 Bleed orifice

Pressure control valve, auxiliary air valve and warm-up regulator.
Electronic control unit and oxygen sensor.

'Engine running' sensor and fuel pump inhibit (see Fig. U28)

The 'engine running sensor is located adjacent to the fuel injection system electronic control unit under the facia (see Fig. U18).

The purpose of the sensor is to inhibit the supply of power to the fuel pump unless the engine is running. There is however, one by-pass to the circuit which allows the fuel pump to operate when the engine is being 'cranked' by the starter motor. A relay within the 'engine running' sensor assembly provides the means of switching on or off the power supply to the fuel pump.

The supply to the fuel pump is along the pink cable from the fuel injection system fuse to the 'engine running' sensor (item 7) and then out to the pump via the white/pink cable. The 'engine running' sensor circuit is fed via the ignition fuse and the white cable, and earthed through the black cable. When the engine is being cranked, a 12 volt feed on the white red cable causes the relay in the sensor to be'pulled in' and thus the fuel pump is

switched on. Once the engine is running the ignition pulses from the coil primary are fed to the 'engine running' sensor through the white/black wire and the pump relay remains energised.

If the engine speed falls below 150 r.p.m. the time between the ignition pulses is too long to hold the relay in the energised state and therefore, the power to the fuel pump is switched off.

Cold start injector and thermal time switch (see Fig. U28)

When the engine is being 'cranked' (i.e. the key in the switchbox is held in the 'START' position) power will be supplied via the white/red cable from the starter relay (item 9) to the thermal time switch, situated in the thermostat housing (item 11) and then onto the cold start injector (item 10). The injector will therefore, operate whenever the engine is being 'cranked', unless the power supply is interrupted by the thermal time switch due to either the temperature of the engine coolant or the length of operating time.

Exhaust gas recirculation (E.G.R.) inhibit (see Fig. U28)

A feed from the ignition fuse (item 4) supplies power to the E.G.R. cut-off solenoid (item 14) via the white cable.

When the ignition is switched on and the engine is cold, the cut-off solenoid is energised via the cut-out switch (item 23) situated in the thermostat housing. Whenever this solenoid is energised the vacuum signal to the E.G.R. valve is interrupted.

As the engine coolant temperature rises to approximately 30°C. (86°F.) the contacts in the thermal cut-out switch open, which de-energises the solenoid and allows the vacuum signal to operate upon the diaphragm of the E.G.R. valve.

This inhibit circuit is also completed by a throttle position micro-switch (item 20) which is connected into the E.G.R. valve inhibit circuit via the white/green cable. When the throttle is opened wide, a cam on the throttle spindle activates the micro-switch, thus energising the E.G.R. cut-off solenoid (item 14) and interrupting the vacuum signal to the E.G.R. valve.

The diode shown fitted across the E.G.R. cut-off solenoid prevents arcing of the micro-switch contacts.

In addition, this micro-switch also changes the fuel injection system operating mode from 'closed-loop' when the throttle is opened wide.

Ignition distributor vacuum retard (see Fig. U28)

The feed from the ignition fuse (item 4) along the white cable also feeds the vacuum retard solenoid (item 12) which is fitted to inhibit the vacuum signal to the capsule on the ignition distributor.

The solenoid is energised when the ignition is

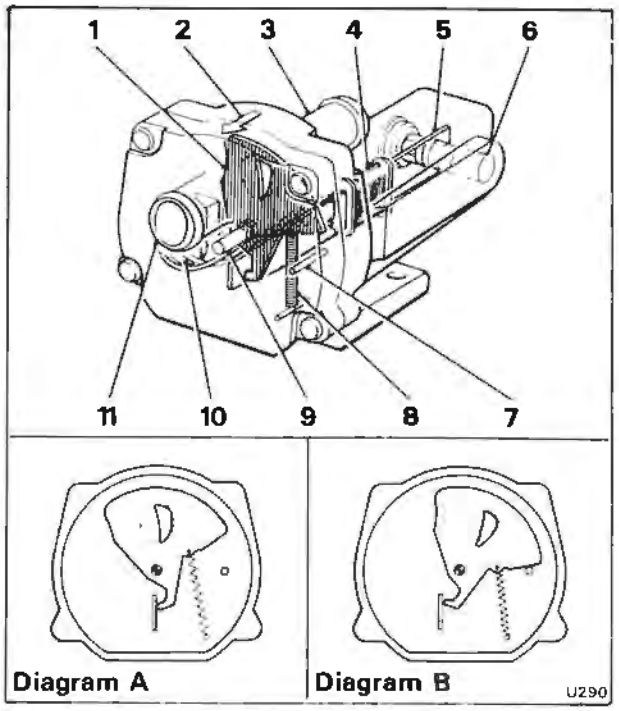

Fig. U26 Auxiliary air valve

Diagram A - Cold engine
Diagram B - Warm engine
1 Blocking plate
2 Airflow direction
3 Upstream throttle connection
4 Heating coil
5 Bi-metallic strip
6 Clamping pin
7 Blocking plate limit stop
8 Return spring
9 Pivot pin
10 Heating coil connection block
11 Downstream throttle connection

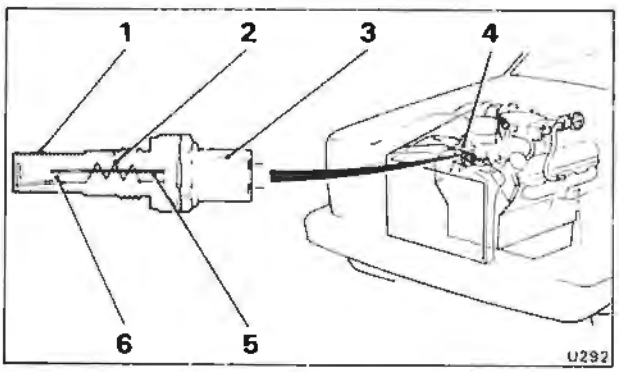

Fig. U27 Thermal time switch

1 Housing
2 Heating coil
3 Plug connector
4 Thermostat housing
5 Bi-metallic strip
6 Contacts

Printed in England
© Rolls-Royce Motors Limited 1980

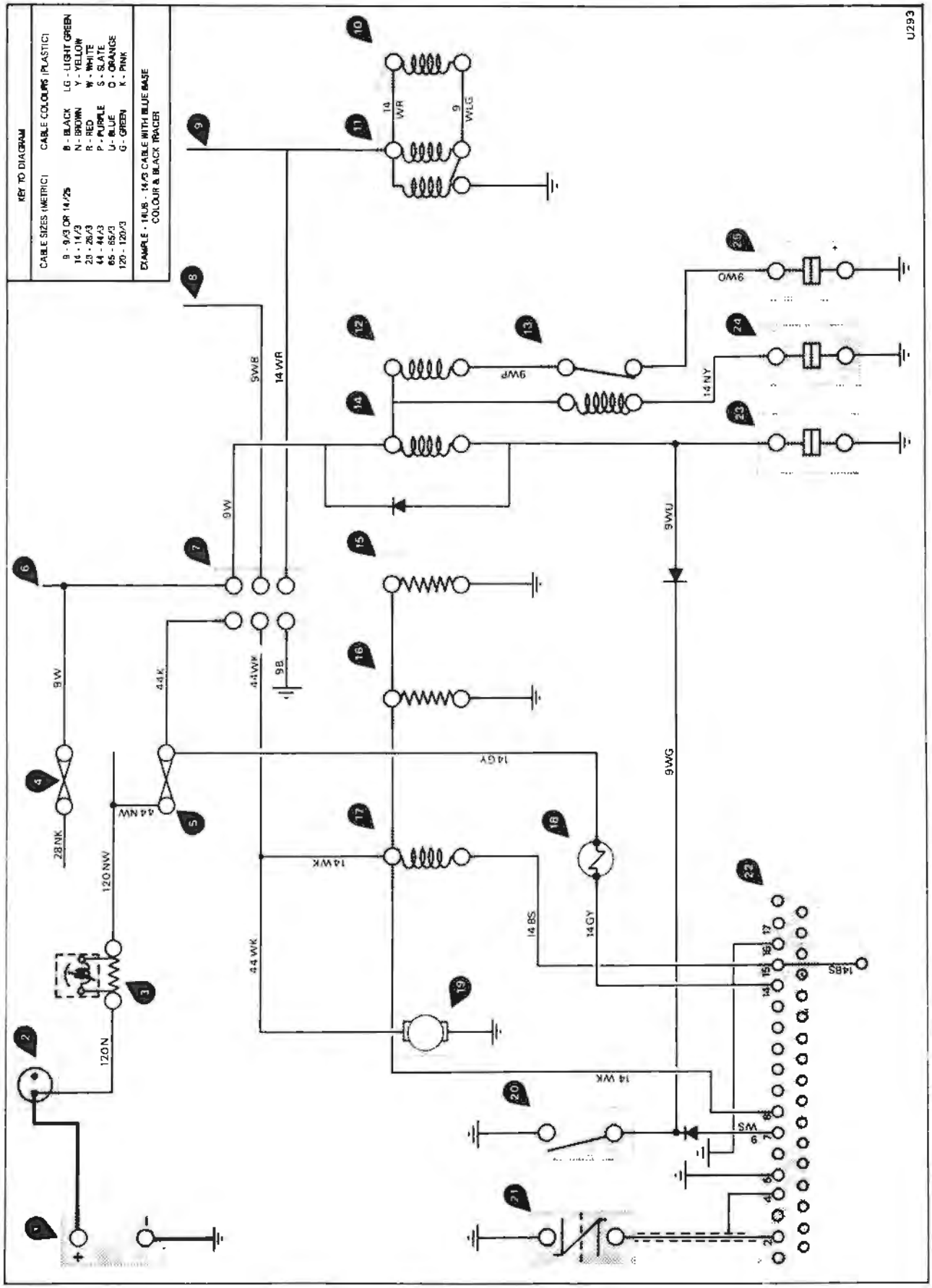

Fig. U28 Electrical wiring diagram (Theoretical)

Key to Fig. U28 Electrical wiring diagram (Theoretical)

1 Battery
2 Starter solenoid
3 Ammeter shunt
4 Ignition fuse
5 Fuel injection system fuse
6 Connection to ignition system ballast resistors
7 'Engine running' sensor
8 Connection to tachometer connection on ballast resistors
9 Connection to starter relay
10 Cold start injector
11 Thermal time switch
12 Ignition distributor vacuum retard signal solenoid (normally closed)
13 Ignition distributor vacuum retard cut-out relay
14 Exhaust gas recirculation valve signal solenoid (normally open)
15 Warm-up regulator heater
16 Auxiliary air valve heater
17 Pressure control valve ('closed loop control')
18 'Oxygen sensor' warning lamp
19 Fuel pump
20 Throttle position micro-switch
21 Oxygen sensor
22 Electronic control unit
23 Coolant temperature switch [breaks on rise at 30°C. (86°F.)]
24 Oil temperature switch [breaks on rise at 17°C. (63°F.)]
25 Coolant temperature switch [breaks on rise at 55°C. (131°F.)]

switched on. However, if the engine is cold the vacuum retard cut-out relay (item 13) is energised via the brown/yellow cable and the engine oil temperature switch (item 24), thus breaking the vacuum retard solenoid circuit (i.e. no vacuum retard).

As the engine warms-up the contacts in the oil temperature switch (item 24) open at approximately 17°C. (63°F.) which de-energises the cut-out relay (item 13) and allows the vacuum retard solenoid to become energised via the coolant temperature switch (item 25).

The vacuum retard solenoid is energised open therefore, the vacuum signal is applied to the retard side of the distributor capsule.

When the engine coolant temperature rises to approximately 55°C. (131°F.) the coolant temperature switch contacts open de-energising the solenoid, therefore, the vacuum retard signal line is closed.

Pressure control valve, auxiliary air valve and warm-up regulator
Electronic control unit and oxygen sensor
Whenever the relay in the 'engine running' sensor is energised a live connection is made to the components listed above via the cable shown in Figure U28. The functions of the components have been described previously.

System warning device (see Fig. U28)
To inform the driver that the oxygen sensor requires replacing, a warning lamp mounted on the facia will illuminate when activated by either an elapsed mileage device (at a pre-determined service interval mileage) or by premature failure of the oxygen sensor.

The elapsed mileage is monitored by a unit which counts the electric pulses generated by an electro-magnetic device, gear driven from the transmission output shaft (these pulsations are also transmitted to the electronic speedometer to monitor the speed of the vehicle).

The method of counting electrical pulses to monitor the elapsed mileage is achieved by the use of a stepping motor and a series of reduction gears. This pulsed rotary motion is then used to drive a stepped cam which operates a set of contacts to illuminate the warning lamp at the predetermined mileage.

Premature failure of the oxygen sensor is detected by the electronic control unit which relies upon the output of the sensor for 'closed loop control'. Failure of the sensor will cause the system to change to the 'open loop control' and in addition, illuminate the warning lamp bulb on the facia to indicate the need for maintenance.

The warning lamp is checked in a similar manner to the other warning lamps mounted on the facia. Whenever the engine is cranked the warning lamp bulb should be illuminated and then extinguished when the engine starts. This warning lamp will however, remain illuminated if the oxygen sensor is below its normal operating temperature.

Modes of operation

This section comprises a brief description of the operating modes for the system.

Engine warm-up
During the warm-up period two basic compensations are necessary.

The first compensation is for fuel condensation losses on the cold walls of the combustion chamber and inlet manifold. The second compensation is for power lost due to increased mechanical friction.

Printed in England
© Rolls-Royce Motors Limited 1980

The compensation for condensation losses is achieved by increasing the fuel flow to the injectors. The power lost is overcome by feeding a larger volume of air into the engine than is dictated by the position of the throttle butterfly.

Prior to the engine starting the control piston is in its lowest position. However, once the air sensor plate is moved downwards by the force of the intake air, the control piston will be moved upwards in the barrel of the fuel distributor.

The control piston is allowed to move further up the barrel of the distributor (for a given volume of intake air), because the control pressure acting against the upward movement of piston, has been reduced by the action of the warm-up regulator.

The extra movement of the control piston increases the opening at the fuel metering slits and allows more fuel to flow to the injectors.

As the bi-metals in the warm-up regulator and the auxiliary air valve are heated they alter the characteristics of their respective components. The warm-up regulator gradually closes the return line to the fuel tank which therefore, increases control pressure and restricts the movement of the control piston in the fuel distributor. This action limits the opening of the fuel metering slits, reducing the fuel flowing to the injectors and thereby, weakening the mixture.

The bi-metal of the auxiliary air valve progressively relaxes its force on the blocking plate, allowing the return spring to pull the plate to its closed position. This reduces the engine idling speed to its normal setting.

Engine idle speed

When the engine attains normal operating temperature it will adopt its normal idle speed. This is initially set during the manufacture of the vehicle by adjusting a screw which acts directly on the throttle mechanism. The screw is then made tamper-proof to prevent further adjustment.

After the engine has settled or 'run-in' minor corrections to the idle speed setting can be achieved by bleeding air around the throttle butterfly, using the bleed screw situated on top of the throttle body. This bleed screw has a limited range of adjustment.

The idle mixture is controlled by an adjusting screw which acts directly onto the air sensor plate lever, altering its position relative to the control piston. Turning the screw will either raise or lower the control piston for a given idle speed position of the air sensor plate, this will either richen or weaken the idle mixture.

Note

The idle mixture is pre-set at the factory and sealed. No further adjustment should be necessary.

Engine part load operation

As the engine speed and load are increased the air sensor plate is progressively forced downwards by the increased flow of intake air.

The downward movement of the sensor plate is transmitted via the sensor plate lever, to the control piston which is raised accordingly in the barrel of the fuel distributor, allowing additional fuel to pass through the metering slits.

The diaphragm in each of the differential pressure valves responds to this additional fuel flow by deflecting further away from the injection line outlet, thus allowing more fuel to flow to the injectors.

Engine full load operation

Under full load conditions the air sensor plate exhibits maximum deflection and the control piston is at its highest position in the barrel of the fuel distributor. This gives the largest openings of the metering slits.

The diaphragm in each differential pressure valve is deflected to its furthest point away from the outlet tube to the injectors, allowing maximum fuel flow.

Due to the action of a micro-switch actuated by a cam on the throttle spindle, the electronic control unit changes to the internal mode, thus blocking the 'closed loop' system and providing additional enrichment by modifying the fixed signal to the pressure control valve.

Engine overrun

During engine overrun (i.e. when deceleration with a closed throttle butterfly) insufficient mixture is supplied to the engine to maintain satisfactory combustion. This condition is alleviated by allowing some air to by-pass the closed throttle butterfly via an overrun valve, whenever a high intake manifold depression exists.

When the throttle plate is suddenly closed the high inlet manifold depression signal generated in the plenum chamber is transmitted via a hose to the housing of the overrun valve. This signal deflects a diaphragm against a return spring and simultaneously allows a spring loaded valve to open the air intake connection of the overrun device. This permits air monitored by the air sensor plate, to by-pass the closed throttle butterfly with a corresponding amount of fuel metered by the fuel distributor. By this means, satisfactory combustion is maintained on overrun.

As soon as the manifold depression falls below a predetermined value, the return spring pushes the diaphragm back to close the overrun valve.

Section U2

Fuel injection system

'Closed loop' system fault diagnosis flow chart
Sheet 1 of 2
Fig. U29

Printed in England
© Rolls-Royce Motors Limited 1982

March 1982
TSD 4200
(California
1980 Model year)

Printed in England

© Rolls-Royce Motors Limited 1982

Important Before commencing work run the engine for 3 minutes, switch off the ignition and allow to cool.
Then ensure that
1. test meter is connected (see page U2-42)
2. engine running sensor has been bridged (see page U2-42)
3. electrical feed to the cold start injector has been disconnected
4. ignition is switched on

A

The meter readings quoted are nominal values. In practice, for a nominal value of 50% the meter reading can be between 45% and 55%. When checking the 'wide open' throttle enrichment the meter reading should increase by 7% from the actual reading measured at step A on Sheet 1.

Can the vibration of the pressure control valve be heard?
- NO → Check the supply to the electronic control pin 8 and continuity from pin 16 to earth. **Are these satisfactory?**
  - NO → Faulty wiring loom or contacts.
  - YES → **Does the pressure control valve now work?**
    - YES → **A** Test meter reads 50%
      - NO → Test meter reads 0%.
        - YES → Detach the electrical supply plug from the pressure control valve. Test meter reads 50%.
          - NO → Check that the resistance of the pressure control valve is 2 to 3 ohms.
            - NO → Pressure control valve electrically defective.
            - YES → Check the electrical plug to the control valve. One contact is 12 volt supply. One contact is to electronic control unit pin 15 (check for continuity) **Is this test satisfactory?**
              - NO → Electronic control unit faulty.
              - YES → Pressure control valve faulty.
          - YES → Pressure control valve electrically defective.
        - NO → Check the test meter connections. Test meter reads 50%.
          - NO → Disconnect the oxygen sensor. Test meter reads 50%
            - NO → Electronic control unit faulty.
            - YES → Faulty oxygen sensor.
          - YES → Check for continuity of cable from electronic control unit pin 2 to oxygen sensor.
            - NO → Faulty wiring loom or contacts.
            - YES → Electronic control unit faulty.
    - NO → **A** Test meter reads 50%
      - YES → Disconnect the oxygen sensor cable. Meter still reads 50%. Connect green sensor cable from electronic control unit to earth. Test meter rises slowly to 88% minimum of rich limit.
        - YES → Continued on sheet 2
        - NO → Check for continuity of cable from electronic control unit pin 2 to oxygen sensor.
          - NO → Faulty wiring loom or contacts.
          - YES → Electronic control unit faulty.
      - NO → Test meter reads 0%.
        - YES → Detach the electrical supply plug from the pressure control valve. Test meter reads 50%.
          - NO → Check that the resistance of the pressure control valve is 2 to 3 ohms.
            - NO → Pressure control valve electrically defective.
            - YES → Check the electrical plug to the control valve. One contact is 12 volt supply. One contact is to electronic control unit pin 15 (check for continuity) **Is this test satisfactory?**
              - NO → Electronic control unit faulty.
              - YES → Pressure control valve faulty.
          - YES → Pressure control valve electrically defective.
        - NO → Check the test meter connections. Test meter reads 50%.
          - NO → Disconnect the oxygen sensor. Test meter reads 50%
            - NO → Electronic control unit faulty.
            - YES → Faulty oxygen sensor.
          - YES → Check for continuity of cable from electronic control unit pin 2 to oxygen sensor.
            - NO → Faulty wiring loom or contacts.
            - YES → Electronic control unit faulty.

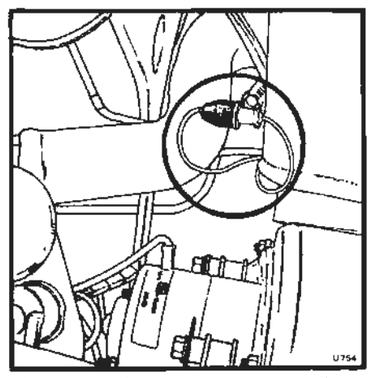

Disconnect the oxygen sensor cable

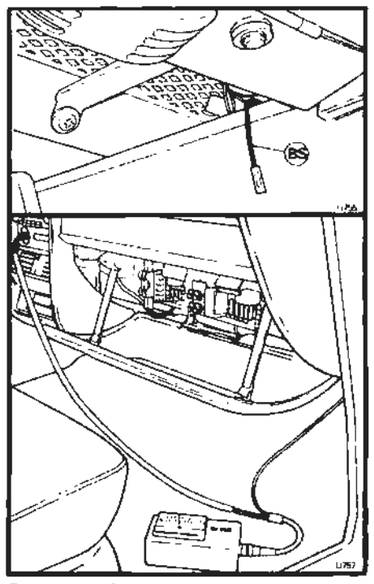

Test meter in position

March 1982

TSD 4200
(California
1980 Model year)

Section U2

Fuel injection system

'Closed loop' system fault diagnosis flow chart

Sheet 2 of 2

Fig. U29

Printed in England

© Rolls-Royce Motors Limited 1980

January 1980

TSD 4200
(California
1980 Model year

Printed in England

© Rolls-Royce Motors Limited 1980

January 1980

TSD 4200
(California
1980 Model year)

Continued from sheet 1

Fully open the throttle.
Test meter reads 57%.

NO → Ensure 'wide open' throttle micro-switch is set correctly.

NO → Adjust the micro-switch

YES → Check for cable continuity from the electronic control unit pin 7 to the micro-switch and the micro-switch to vehicle earth.

NO → Faulty wiring loom or contacts.

YES → Electronic control unit faulty.

YES → Connect the 2 volt supply on test meter to the disconnected oxygen sensor cable (feed to the electronic control unit).
Test meter reads less than 20%.

NO → Electronic control unit faulty.

YES → With the oxygen sensor cable still disconnected, connect a CO analyzer into the exhaust pipe sample tapping using the adapter RH 9611. Run the engine until normal operating temperature is attained. Check that the idle CO is between 0.5% and 0.7% at 650 r.p.m. in Neutral

NO → Carry out tests to basic K-Jetronic fuel injection system.

YES → Connect the oxygen sensor cable.
Is the CO value unchanged?

NO → Increase the engine speed to approximately 1 500 r.p.m. the CO reading should fall below the idle speed value.

NO → Disconnect the oxygen sensor cable.
Does the engine idle speed become regular and increase?

NO → Pressure control valve has failed mechanically.

YES → Check the engine idle speed and adjust if necessary.

YES → Check for exhaust gas leaks at the exhaust manifolds and oxygen sensor.

YES → Oxygen sensor is faulty.

The meter readings quoted are nominal values. In practice, for a nominal value of 50% the meter reading can be between 45% and 55%. When checking the 'wide open' throttle enrichment the meter reading should increase by 7% from the actual reading measured at step A on Sheet 1.

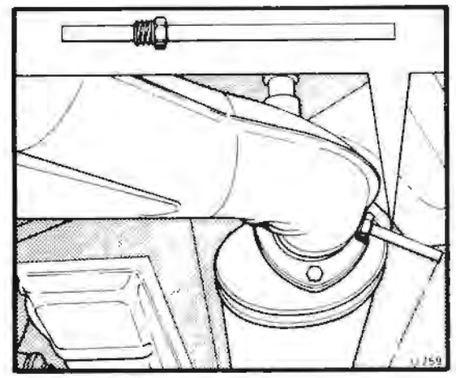

Adapter RH 9611 fitted into exhaust sample tapping

Section U2

Fuel injection system

Wiring loom fault
diagnosis flow chart
Fig. U29

Printed in England
© Rolls-Royce Motors Limited

Printed in England

© Rolls-Royce Motors Limited

Important Before commencing work ensure that the
1. fuel injection system and ignition fuses are in good condition
2. multi-pin plug has been disconnected from the electronic control unit
3. engine running sensor is bridge (see Page U2-42)
4. ignition is switched on

Measure the supply voltage between the plug pin 8 and the vehicle earth. **Is it 12 volts?**
- NO → Measure the supply voltage between the engine running sensor terminal 5 and the vehicle earth. **Is it 12 volts?**
  - NO → Measure the supply voltage between the engine running sensor terminal 7 and the vehicle earth. **Is it 12 volts?**
    - NO → Check for cable continuity between the fuse and terminal 7 on engine running sensor.
    - YES → Measure the supply voltage between the engine running sensor terminal 6 and terminal 1. **Is it 12 volts?**
      - NO → (a) Check for cable continuity between the ignition fuse and terminal 6. (b) Check for cable continuity between pin 1 and earth.
      - YES → Measure the supply voltage between the engine running sensor terminal 2 and the vehicle earth. **Is it 12 volts?**
        - NO → Check for cable continuity between the starter relay and terminal 2 on the engine running sensor.
        - YES → Check for cable continuity between the engine running sensor terminal 4 and the connection on the ignition ballast resistor. **Is this satisfactory?**
          - YES → Faulty engine running sensor.
  - YES → Check for cable continuity between the engine running sensor pin 5 and plug pin 8.
- YES → Measure the supply voltage between the plug pin 8 and the plug pin 5. Is it 12 volts?
  - NO → Check for cable continuity between plug pin 5 and the vehicle earth.
  - YES → Measure the supply voltage between the plug pin 8 and the plug pin 16. Is it 12 volts?
    - NO → Check for cable continuity between plug pin 16 and the vehicle earth.
    - YES → Measure the supply voltage between the plug pin 15 and the plug pin 16. Is it 12 volts?
      - NO → Disconnect the electrical plug from the pressure control valve and measure the supply voltage between each plug pin and the vehicle earth. **Is one 12 volts and the other zero?**
        - NO → Check that the resistance of the pressure control valve is 2 to 3 ohms.
          - NO → Pressure control valve faulty.
          - YES → Check for cable continuity between plug pin 15 and the pressure control valve plug.
        - YES → Disconnect the green cable to the oxygen sensor in the engine compartment and check for cable continuity between the cable connector and plug pin 2. **Is this correct?**
          - YES → Check for continuity between the sensor cable screen and the plug pin 4 (approximately zero ohms).
            - YES → Check the cable between the electronic control unit pin 17 and the test connection. Check the connection continuity.

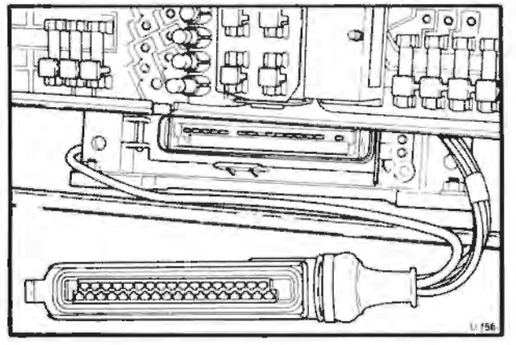

Disconnect the multi-pin plug

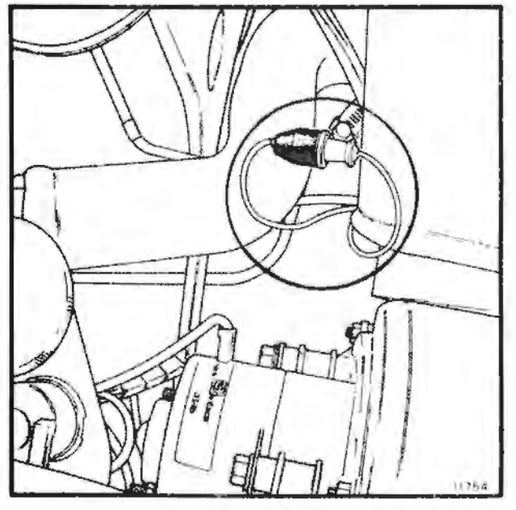

Disconnect the oxygen sensor cable

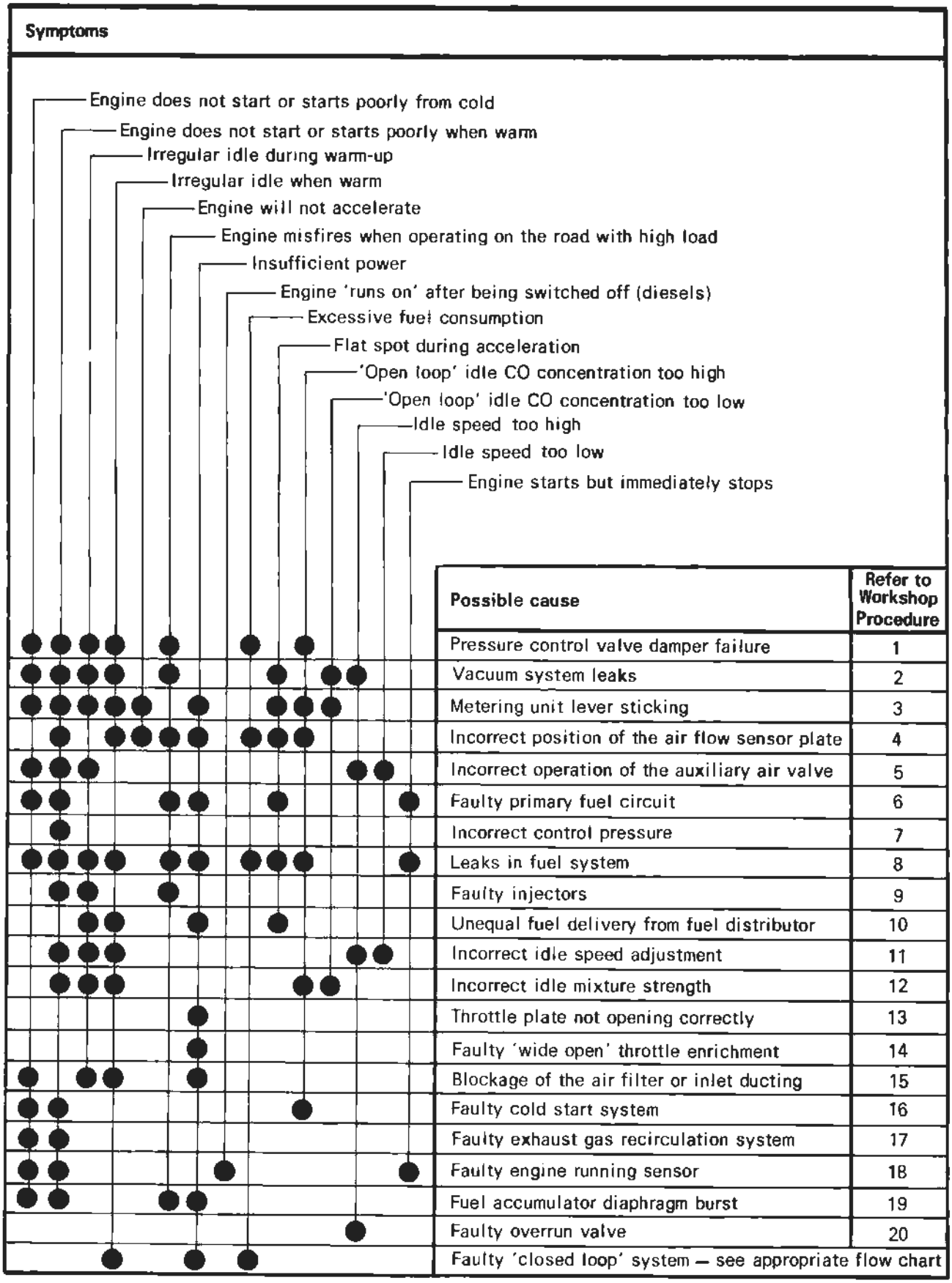

Possible cause	Refer to Workshop Procedure
Pressure control valve damper failure	1
Vacuum system leaks	2
Metering unit lever sticking	3
Incorrect position of the air flow sensor plate	4
Incorrect operation of the auxiliary air valve	5
Faulty primary fuel circuit	6
Incorrect control pressure	7
Leaks in fuel system	8
Faulty injectors	9
Unequal fuel delivery from fuel distributor	10
Incorrect idle speed adjustment	11
Incorrect idle mixture strength	12
Throttle plate not opening correctly	13
Faulty 'wide open' throttle enrichment	14
Blockage of the air filter or inlet ducting	15
Faulty cold start system	16
Faulty exhaust gas recirculation system	17
Faulty engine running sensor	18
Fuel accumulator diaphragm burst	19
Faulty overrun valve	20
Faulty 'closed loop' system — see appropriate flow chart	

Fig. U29 Basic K-Jetronic fault diagnosis chart

Printed in England

© Rolls-Royce Motors Limited 1980

January 1980

TSD 4200
(California
1980 Model year)

Workshop safety precautions

General

Always ensure that the vehicle parking brake is firmly applied, the gear range selector lever is in the 'Park' position and the gearbox isolator is removed from the fusebox.

A number of the nuts, bolts and setscrews used in the fuel injection system are dimensioned to the metric system, it is important therefore, that when new parts become necessary the correct replacements are obtained and fitted.

Fire

The fuel is highly inflammable, therefore great care must be exercised whenever the fuel system is opened (i.e. pipes or unions disturbed) or the fuel is drained. Always ensure that 'no smoking' signs and foam, dry powder or CO_2 (carbon dioxide) fire extinguishers are placed in the vicinity of the vehicle.

Always ensure that the battery is disconnected before opening any fuel lines.

If the fuel is to be drained from the tank, ensure that it is siphoned into a suitable covered container.

Fuel pressure

The fuel injection system contains fuel that may be under high pressure [approximately 4,8 bar (70 lbf/sq.in.)]. Therefore, to reduce the risk of possible injury and fire, always ensure that the system is depressurised by one of the following methods before commencing any work that will entail opening the system.

(a) Clean the inlet connection to one of the fuel filters. Wrap an obsorbent cloth around the joint and carefully slacken the pipe nut to release any pressurised fuel from the system. Tighten the pipe nut.

(b) Allow the pressure to fall naturally by switching off the engine and allowing the vehicle to stand for two hours before opening the system.

Health risk

Unleaded fuel may contain up to 5% of benzene as an anti-knock additive. Benzene is extremely injurious to health (being carcinogenic) therefore, **all contact should be kept to an absolute minimum, particularly inhalation.**

The fuel has a sufficiently high vapour pressure to allow a hazardous build-up of vapour in poorly ventilated areas. The vapour is an irritant to the eyes and lungs, if high concentrations are inhaled it may cause nausea, headache and depression. The liquid is an irritant to the eyes and skin and may cause dermatitis following prolonged or repeated contact.

When it becomes necessary to carry out work involving the risk of contact with the fuel, particularly for prolonged periods, it is advisable to wear protective clothing including safety goggles, gloves and aprons. Any work should be carried out in a well ventilated area.

If there is contact with the fuel the following emergency treatment is advised.

Ingestion (swallowing)	**Do not** induce vomiting. Give the patient milk to drink (if none is available water can be given). The main hazard after swallowing fuel is that some of the liquid may get into the lungs. Send the patient to hospital immediately.
Eyes	Wash with a good supply of clean water for et least 10 minutes.
Skin contact	Immediately drench the effected parts of the skin with water. Remove contaminated clothing and then wash all contaminated skin with soap and water.
Inhalation (breathing in vapour)	Move the patient into the fresh air. Keep the patient warm and at rest. If there is loss of consciousness give artificial respiration. Send the patient to hospital.

Cleanliness

It is extremely important to ensure maximum cleanliness whenever work is carried out on the system.

The main points are;

1. In order to prevent the ingress of dirt, always clean the area around a connection before dismantling a joint.

2. Having disconnected a joint (either fuel or air) always blank off any open connections as soon as possible.

3. Any components that require cleaning should be washed in clean fuel and dried, using compressed air.

4. If it is necessary to use a cloth when working on the system, ensure that it is lint-free.

Fault diagnosis

This fault diagnosis section includes

(a) **Basic system test procedure**

(b) **Electrical and Electronic components fault diagnosis**

(c) **Mechanical components fault diagnosis**

It is important that fault finding is carried out in the sequence given, otherwise, as electrical and electronic faults sometimes exhibit symptoms similar to mechanical faults, an incorrect diagnosis may be made which could result in both lengthy and costly repairs.

Often, a mechanical fault has sufficiently well defined symptoms to enable a very rapid diagnosis to be made. However, in such cases the operation

of the 'closed loop' system should always be checked after correcting the mechanical fault.

The **basic fault finding procedure** is as follows, noting that any faults found in one system should be rectified before moving on to the next stage of the procedure.

1. Carry out a **compression test** on the engine cylinders (to inhibit the operation of the system during this test, remove the fuel injection fuse).
2. Check that the **ignition system** is operating satisfactorily (use an ignition system analyser for this test).
3. Ensure that the **vacuum system** is free from leaks (refer to Fig. U5, Vacuum hose routing diagram).
4. Ensure that the **E.G.R. system** is free from leaks, particularly the joint at the plenum chamber.
5. Ensure that all **auxiliary air hoses** and **crankcase breather system hoses** are free from leaks.
6. Check that the **solenoid valves** and their **thermal switches** are working correctly (see Section U7).
7. Test the **basic K-Jetronic system** for correct operation (refer to the list of symptoms and possible causes).
8. Test the **'closed loop' system** for correct operation (refer to Fig.U29 Faults diagnosis flow charts).

Before commencing any fault diagnosis or work on the fuel injection system ensure that the Workshop safety precautions are fully understood.

During manufacture, the components of the fuel injection system are precisely adjusted in order to comply with the relevant emission control regulations and therefore, alterations to any of the settings should not normally be necessary.

If however, due to a fault and subsequent service work or if the settings become inadvertently disturbed, the following procedures should be adhered to.

Diagnosing and correcting faults

The workshop procedure number given before the title of the operation refers to the fault diagnosis chart for the basic K-Jetronic system given in Figure U29.

Before carrying out any tests, ensure that the battery is in a fully charged condition.

It should be noted that all components of the system (except the injectors and the overrun valve) can be tested on the vehicle.

Procedure 1 Pressure control valve damper failure

To check the pressure control valve damper for failure of the diaphragm, remove the small diameter rubber pipe from the rear of the unit and check for the presence of fuel. If a diaphragm failure is suspected **do not run the engine** as high pressure fuel will emerge from the damper pipe.

Fit a new damper assembly if a failure of the diaphragm is suspected.

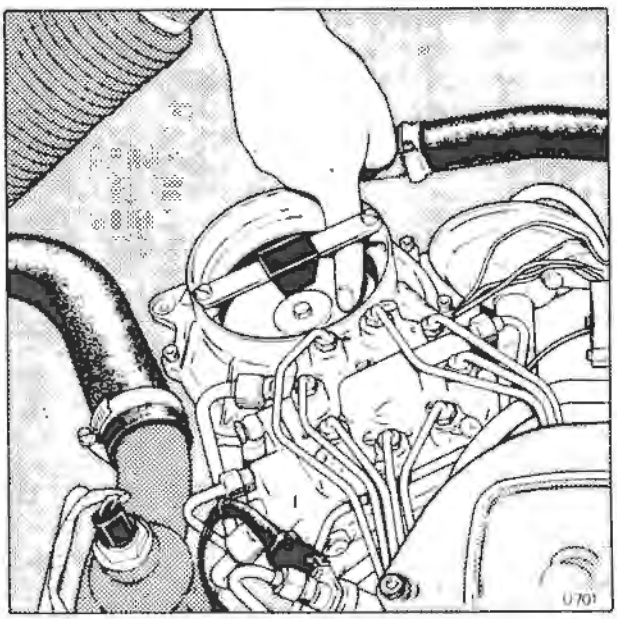

Fig. U30 Checking the movement of the air flow sensor plate

Procedure 2 Induction system air leaks

Visually check all vacuum hoses, pipes and clips for damage or looseness that may allow an air leak into the induction system (see Fig. U5).

Check the entire induction system for air leaks with the engine running. Use a suitable length of rubber hose as a listening tube. One end of the hose should be placed near to the operator's ear and the other end moved over the areas where a leak is suspected. The leak will often be heard as a high pitched hiss or whistle.

Procedure 3 Metering control unit lever sticking

1. Ensure that the engine temperature is above 20°C. (68°F.).
2. Remove the air intake duct from the inlet to the control unit
3. Bridge the engine running sensor (refer to Page U2-42).
4. Switch on the ignition for approximately 10 seconds, then switch off the ignition. This will ensure that control system pressure is applied to the control piston.
5. Press the air sensor plate slowly downwards (see Fig. U30) to its maximum open position. The resistance to this movement should be uniform over the whole range of travel. Allow the air sensor plate to return to its rest position and repeat the operation.

If the resistance to the air sensor plate movement is uniform over the whole range of travel the metering unit is not sticking.

6. Should the resistance to air sensor plate movement be greater in the rest position, it could be due to the air sensor plate being either out of position or bent.
7. If the condition described in Operation 6 is confirmed, press the air sensor plate downward several times to exhaust the control pressure. Then,

Printed in England
© Rolls-Royce Motors Limited 1980
January 1980
TSD 4200
(California
1980 Model year)

press the plate fully downwards and allow it to spring back to the rest position; it should return freely and bounce downwards slightly from the spring loaded stop at least once.

8. Should a resistance be confirmed in Operation 7 remove the air sensor plate and repeat the operation. If this alleviates the resistance, the air sensor plate is fouling the sides of the air funnel and should be centralised (refer to Procedure 4) or the air funnel may be deformed in some way.

9. If there is still a resistance to the movement of the lever it could be due to contamination within the fuel distributor barrel or occasional binding in the lever mechanism.

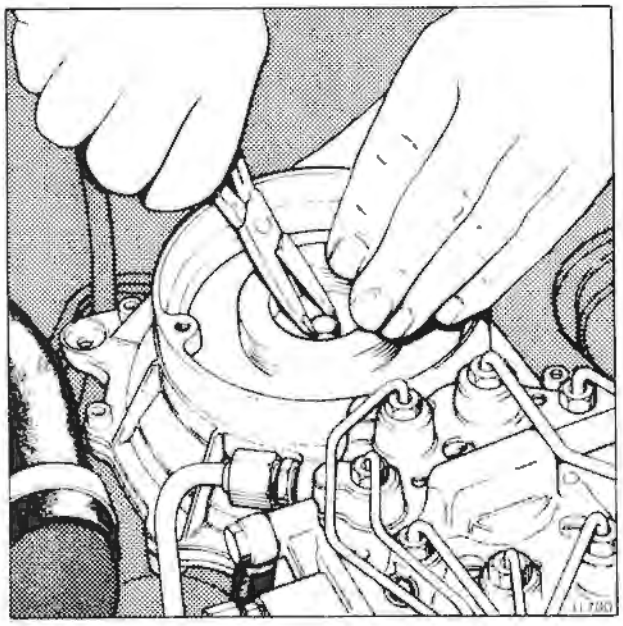

Fig. U31 Installing the centring guide ring

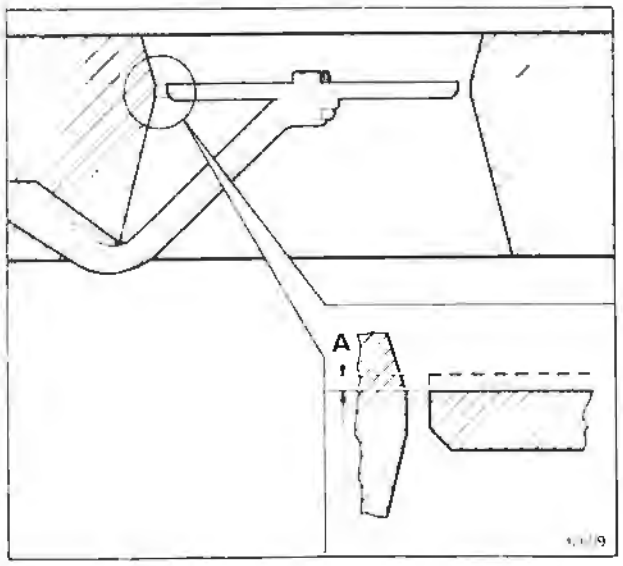

Fig. U32 Checking the height of the air flow sensor plate
A 0,5 mm.(0.020 in.).

10. Contamination within the fuel distributor can be checked by separating the fuel distributor from the control unit and withdrawing the control piston for inspection.

Use a screwdriver to remove the three retaining screws situated on top of the fuel distributor around the connection to the warm-up regulator. Lift off the fuel distributor (resistance will be felt due to the rubber sealing ring), bend back the piston retaining tabs and withdraw the piston.

Handle the control piston with care if it is knocked or dropped it may become damaged.

11. Thoroughly clean the control piston in clean unleaded fuel.

12. Fit the control piston to the fuel distributor. Ensure that the spring is fitted above the piston.

Bend the retaining tabs so that the piston cannot fall out. Ensure that the rubber sealing ring situated between the fuel distributor and the mixture control unit, is in good condition. Lubricate the rubber sealing ring with approved grease and fit the distributor ensuring that the three retaining screws are evenly tightened.

If a resistance is still noticeable a new fuel distributor assembly should be fitted to the mixture control unit.

Procedure 4 Positioning the air flow sensor plate

1. Remove the air inlet ducting from above the air sensor plate.
2. Check that the sensor plate is flat (i.e. not bent) and that it will pass through the narrowest part of the air funnel without fouling.
3. If necessary, loosen the sensor plate securing screw.
4. Insert the centring guide ring (RH 9609) whilst retaining the sensor plate in the zero movement position by holding the securing screw with a pair of pliers (see Fig. U31). This will prevent the sensor plate from being forced downwards as the centring guide ring is being installed.
5. With the centring guide ring in positon tighten the retaining screw to the torque figure given in Chapter P. Carefully remove the centring guide ring.
6. Bridge the engine running sensor and switch on the ignition for 10 seconds to apply control pressure to the control piston in the fuel distributor.
7. The upper edge of the sensor plate adjacent to the fuel distributor, should be flush with the beginning of the upper cone shown in Figure U32.

Note

It is permissable to leave the top edge of the air sensor plate adjacent to the fuel distributor, protruding into the upper cone by a maximum of 0,5 mm.(0 020 in.). The lower edge of the sensor plate which is chamfered, must not project upwards outside the short cylindrical part of the air funnel at any point on its circumference

8. If the air sensor plate is positioned too high, remove the fuel distributor and carefully tap the guide pin lower (see Fig. U33) using a mandrel and a small hammer.

Note
This adjustment must be made very carefully, ensuring that the guide pin is not driven too low. Repeated adjustment in both directions can loosen the guide pin. Serious damage to the engine could result if the pin should fall out.

Procedure 5 Checking the operation of the auxiliary air valve

1. Ensure that the engine is cold.
2. Disconnect the electrical plug at the auxiliary air valve.
3. Disconnect the inlet and outlet rubber hoses from the auxiliary air valve.
4. Using a flashlight and a small mirror observe the position of the hole in the blocking plate. It should be partially uncovered (see Fig. U34). If the blocking plate completely closes the air passage, fit a new auxiliary air valve.
5. If the air passage way is open, bridge the engine running sensor (refer to Page U2-42). Connect the electrical plug to the auxiliary air valve and switch on the ignition. The air passage through the valve should be completely closed within four minutes.
6. If the blocking plate does not close; check the electrical power supply to the auxiliary air valve. The minimum voltage at the connector should be 11.5 volts with the engine stationary and the ignition switched on.
7. Finally, using an ohmmeter, check the heating coil in the auxiliary air valve for an open circuit.

Should the heating coil prove faulty fit a new air valve.

Procedure 6 Checking the operation of the primary fuel circuit

Fuel delivery

1. Fit the pressure tester (RH 9612, Bosch No. KDEP 1034) and adapter (RH 9607). Refer to Page U2-40.
2. Open both valve screws on the pressure tester valve block.
3. Disconnect the fuel return line to the fuel tank, at the fuel distributor (see Fig. U6). Using a 'firtree' type nipple and nut (SPM 1390/1) connect one end of an auxiliary fuel return hose to the connection. Hold the other end of the hose in a graduated measuring container capable of holding at least 2 litres (3.5 Imp pt., 4.25 U.S. pt.).
4. Disconnect the electrical plug from the warm-up regulator and the auxiliary air valve.
5. Bridge the engine running sensor (refer to Page U2-42) and switch on the ignition for 30 seconds. At least 1 000 cc. of fuel should be delivered into the measuring container.
6. If the delivery quantity is satisfactory check the primary system pressure, however, if delivery quantity is below the prescribed amount proceed as follows, checking the fuel pump delivery after each operation.
7. Check the voltage at the fuel pump. When the pump is operating this should be 11.5 volts.
8. Check the fuel lines for blockage.

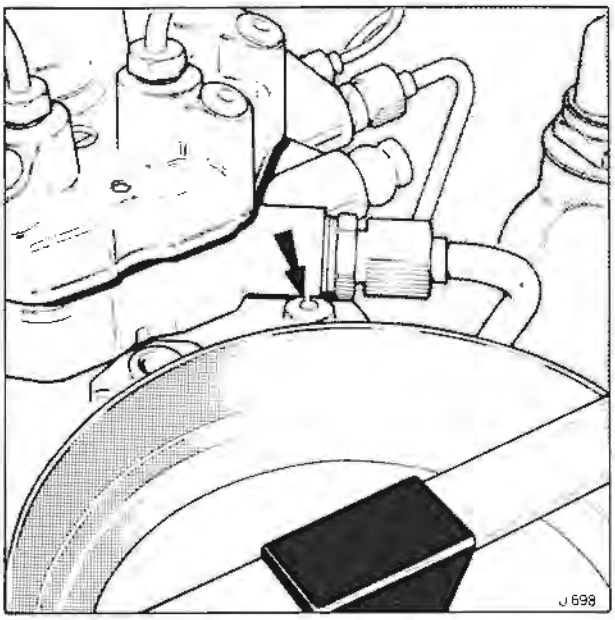

Fig. U33 Height adjustment for the air flow sensor plate

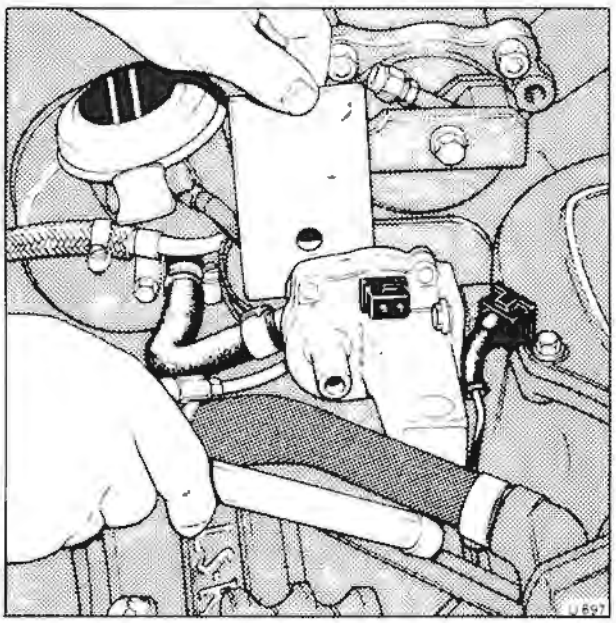

Fig. U34 Checking the auxiliary air valve (E.G.R. valve heatshield removed)

9. Fit a new main fuel filter.
10. Fit a new fuel pump.

After establishing that the fuel delivery is correct remove the test equipment. Connect the fuel return pipe to the fuel distributor.

Primary system pressure

To carry out this test, fit the pressure tester (RH 9612, Bosch No. KDEP 1034) and adapter (RH 9607). Refer to Page U2-40.

The temperature of the engine is not important for this test.

Printed in England
© Rolls-Royce Motors Limited 1984
March 1984
TSD 4200
(California
1980 Model year)

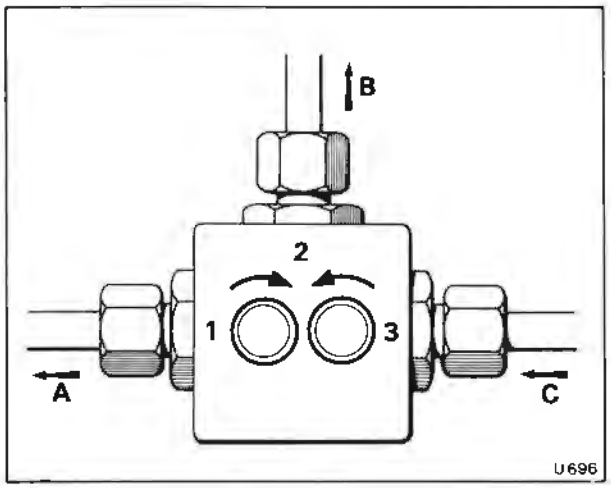

Fig. U35 Three-way valve block (primary system pressure)
A To the warm-up regulator
B To the pressure gauge
C From the fuel distributor

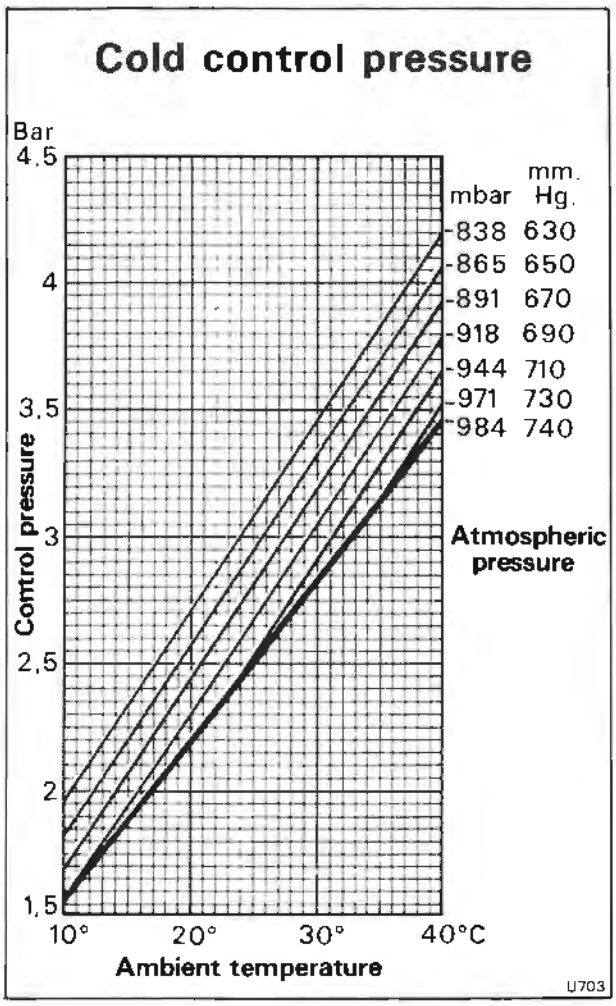

Fig. U36 Control pressure (cold)

1. Close the valve screw on the pressure tester three-way block adjacent to the connection to the warm-up regulator (see Fig. U35).
2. Bridge the engine running sensor (refer to Page U2-42) and switch on the ignition. The pressure gauge will now show primary system pressure which should be between 5,2 bar and 5,8 bar (75.4 lbf/sq. in. and 84.1 lbf/sq.in.).
3. If the primary system pressure is too **low.**
(a) check the fuel supply
(b) check the setting of the pressure regulator and service if necessary (see Primary system pressure regulator - To service).
4. If the primary system pressure is too **high**
(a) check for a restriction in the return line to the fuel tank.
(b) check the setting of the pressure regulator and service if necessary (see Primary system pressure regulator - To service).

Procedure 7 Checking the control pressure
Control pressure is determined by the warm-up regulator and governs the basic mixture strength.

The warm-up regulator contains two temperature sensitive bi-metals and an aneroid capsule (see Fig. U25) which responds to atmospheric pressure. Therefore, the control pressure depends upon the warm-up regulator bi-metal temperature and the atmospheric pressure (which is reduced with increasing altitude).

Fit the pressure tester (RH 9612, Bosch No. KDEP 1034) and adapter (RH 9607). Refer to Page U2-40.

Cold control pressure
The engine must be cold to enable this test to be properly carried out. The engine must not have been run for at least four hours or preferably, left over-night.

The ambient temperature at the time of the test must also be known.
1. Disconnect the electrical plug situated on the warm-up regulator.
2. Bridge the engine running sensor (refer to Page U2-42.
3. Open both valves on the pressure tester valve block.
4. Switch on the ignition, noting that the pressure tester gauge will show cold control pressure.
5. Refer to Figure U36 for the correct cold control pressure.

If the test site is at sea level the correct control pressure should be within ± 0,2 bar (3 lbf/sq.in.) of the heavy line (corresponding to an atmospheric pressure of 984 millibars).

Example With an atmospheric pressure of 984 millibars or above and an ambient air temperature of 20°C. (68°F.), the **cold control pressure** should be between 2,0 bar and 2,4 bar (29 lbf/sq.in. and 34.8 lbf/sq. in.).

If the test site is at altitude [i.e. above 600 m. (1 968.5 ft.)], determine the atmospheric pressure at the time of the test. This should be obtained from a local weather station or airport that is at the same altitude, or from a reliable mercury barometer reading taken at the test site.

The control pressure should be within ±0,25 bar (3.6 lbf/sq.in.) of the value corresponding to the atmospheric pressure.

Example With an atmospheric pressure of 838 millibars and an ambient air temperature of 20°C. (68°F.), the **cold control pressure** should be between 2,45 bar and 2,95 bar (35.5 lbf/sq.in. and 42.8 lbf/sq.in.).

6. To carry out a basic functional test on the altitude compensation device at sea level, connect a suitable hand operated vacuum pump to the breather connection on the warm-up regulator and evacuate the body (see Fig. U37). Ensure that the control pressure rises as the pressure within the warm-up regulator decreases.

If the cold control pressure is incorrect fit a new warm-up regulator.

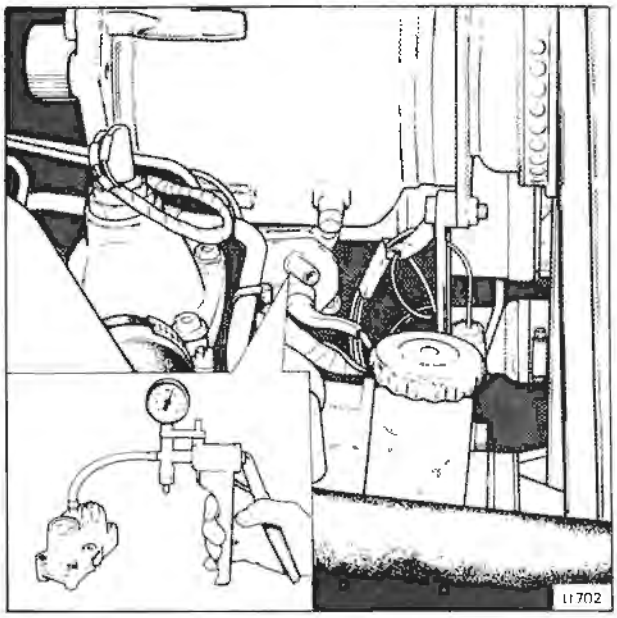

Fig. U37 Evacuating the body of the warm-up regulator

Warm control pressure

The temperature of the engine is not important when carrying out this test.

7. Connect the electrical plug to the warm-up regulator.

8. Ensure that the engine running sensor is bridged and both valves on the valve block of the pressure tester are open.

9. Switch on the ignition. The control pressure should begin to rise. When it has stabilised the warm control pressure is indicated. This should take no more than 1 minute at 20°C. (68°F.).

10. Refer to Figure U38 for the correct warm control pressure at the corresponding test site altitude.

11. If the warm control pressure is incorrect, check that there is an electrical supply to the warm-up regulator. If the supply is correct the warm-up regulator is defective and a new assembly should be fitted.

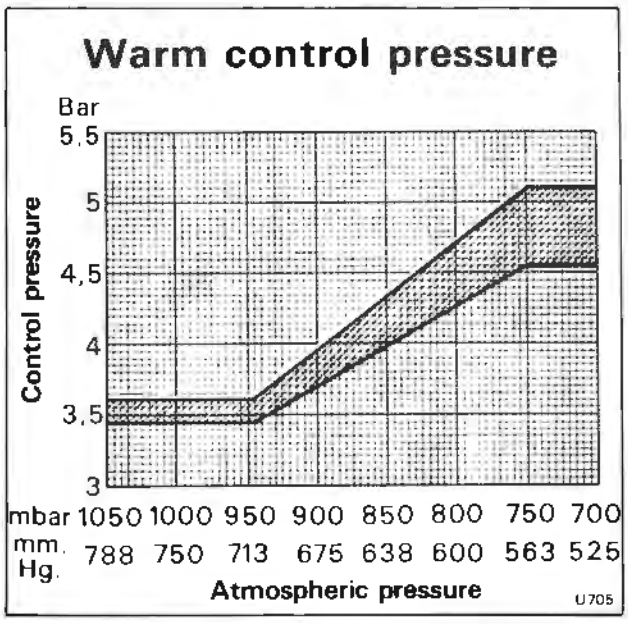

Fig. U38 Control pressure (warm)

Procedure 8 Checking the fuel system for leaks

1. Fit the pressure tester (RH 9612, Bosch No. KDEP 1034) and adapter (RH 9607). Refer to Page U2-40. Ensure that both valves on the pressure tester valve block are open.

2. Ensure that the engine temperature is between 30°C. and 50°C. (86°F. and 122°F.).

3. Bridge the engine running sensor (refer to Page U2-42).

4. Switch on the ignition and allow 1 minute for warm control pressure to be registered on the gauge of the pressure tester.

5. Switch off the ignition noting the time taken for the pressure to fall to zero and compare this time with the data given in Figure U39.

6. If the pressure drops too quickly repeat the test with the control pressure circuit disconnected. To carry out this test, close the valve on the pressure tester valve block adjacent to the warm-up regulator connection (see Fig. U35) and repeat the test given in Operations 2 to 5 inclusive.

Should the pressure loss now be acceptable, there is a leak either:

(a) externally from the control circuit pipes and/or pipe connections.

(b) at the push valve situated within the primary system pressure regulator. This indicates that the rubber sealing rings are defective and should be changed (refer to Primary system pressure regulator - To service).

Printed in England
© Rolls-Royce Motors Limited 1980
January 1980
TSD 4200
(California
1980 Model year)

Should the pressure loss remain outside the acceptable limits, the leak is in the primary fuel circuit and may be due to:

(a) the sealing ring in the primary system pressure regulator being defective and indicating that the rubber sealing rings in the assembly should be changed (refer to Primary system pressure regulator - To service).
(b) the cold start injector leaking.
(c) a faulty non-return valve in the fuel pump (fit a new fuel pump).
(d) leaking accumulator diaphragm.
(e) an external leak from one of the fuel system pipes.
(f) one or more of the injectors leaking.

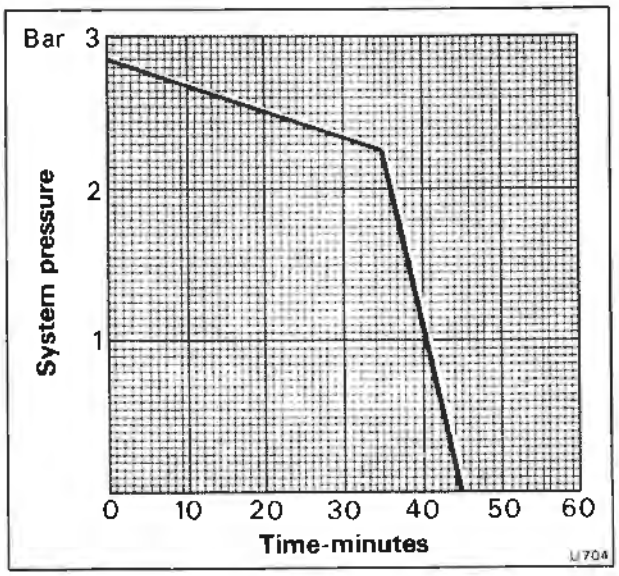

Fig. U39 Fuel system 'leak down'

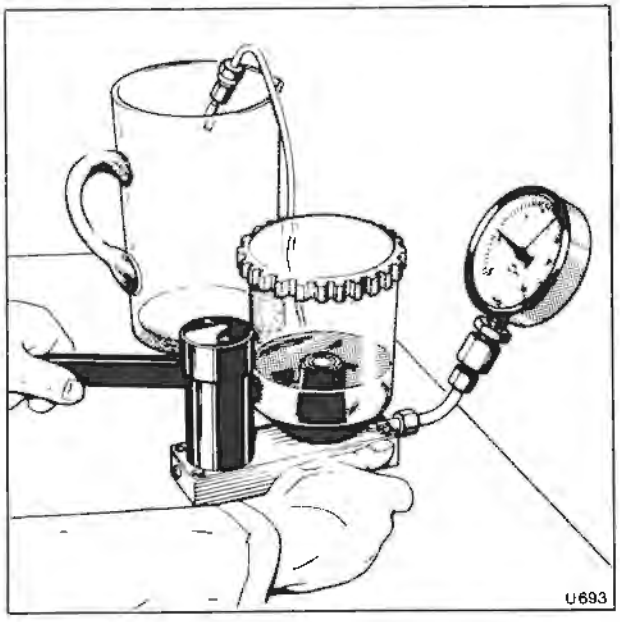

Fig. U40 Testing an injector

If an injector leak is suspected, switch on the ignition to restore the system pressure then slightly depress the air sensor plate. If the pressure reading drops continuously with the sensor plate depressed an injector is leaking. Remove the sparking plugs for inspection, the plug removed from the cylinder having the sticking injector will often be found in a sooty condition.

Procedure 9 Checking the injectors

1. Remove the injectors from the engine.
2. Connect one injector to the test equipment (RH 9614, Bosch No. KDJE 7452). Refer to Figure U40.

Opening pressure

3. Bleed the discharge tube by moving the operating lever several times with the union slackened. Tighten the union.
4. Check the injector for dirt by operating the lever slowly at approximately one stroke per two seconds, with the valve on the pressure gauge open.

If the pressure does not rise to between 1,0 bar and 1,5 bar (14.5 lbf/sq.in. and 21.75 lbf/sq.in.) the valve of the injector has a bad leak, possibly caused by dirt. Attempt to flush the valve by operating the lever rapidly several times. If the injector valve does not clear the injector should be discarded.

5. Check the opening pressure of the injector by closing the valve of the test equipment and bleeding the injector by operating the test equipment lever rapidly several times. Open the valve and move the lever slowly at approximately one stroke per two seconds, note the pressure at which the injector begins to spray.

The correct pressure for the injector to commence spraying is between 3,5 bar and 4,1 bar (50.75 lbf/sq.in. and 59.45 lbf/sq.in.) if this is not correct fit a new injector.

Leakage test

6. Open the valve on the test equipment and slowly operate the lever until the pressure reading is 0,5 bar (7.25 lbf/sq.in.) below the previously determined opening pressure.
7. Hold this pressure constant by moving the lever.
8. No drops should appear from the injector for the next 15 seconds.

Evalution of spray and 'chatter' test

9. Operate the lever of the test equipment at one stroke per second, as this is done the valve in the end of the injector should be heard to 'chatter'.
10. The injector should also produce an even spray with an approximate spray angle of 35°. If drops form at the mouth of the injector valve or if the spray is excessively one-sided, the injector should be discarded.

The various spray formations and angles are shown in Figure U41.

Repeat Operations 1 to 10 inclusive on the remaining injectors noting that only new test fluid must be used to replenish the reservoir of the test equipment.

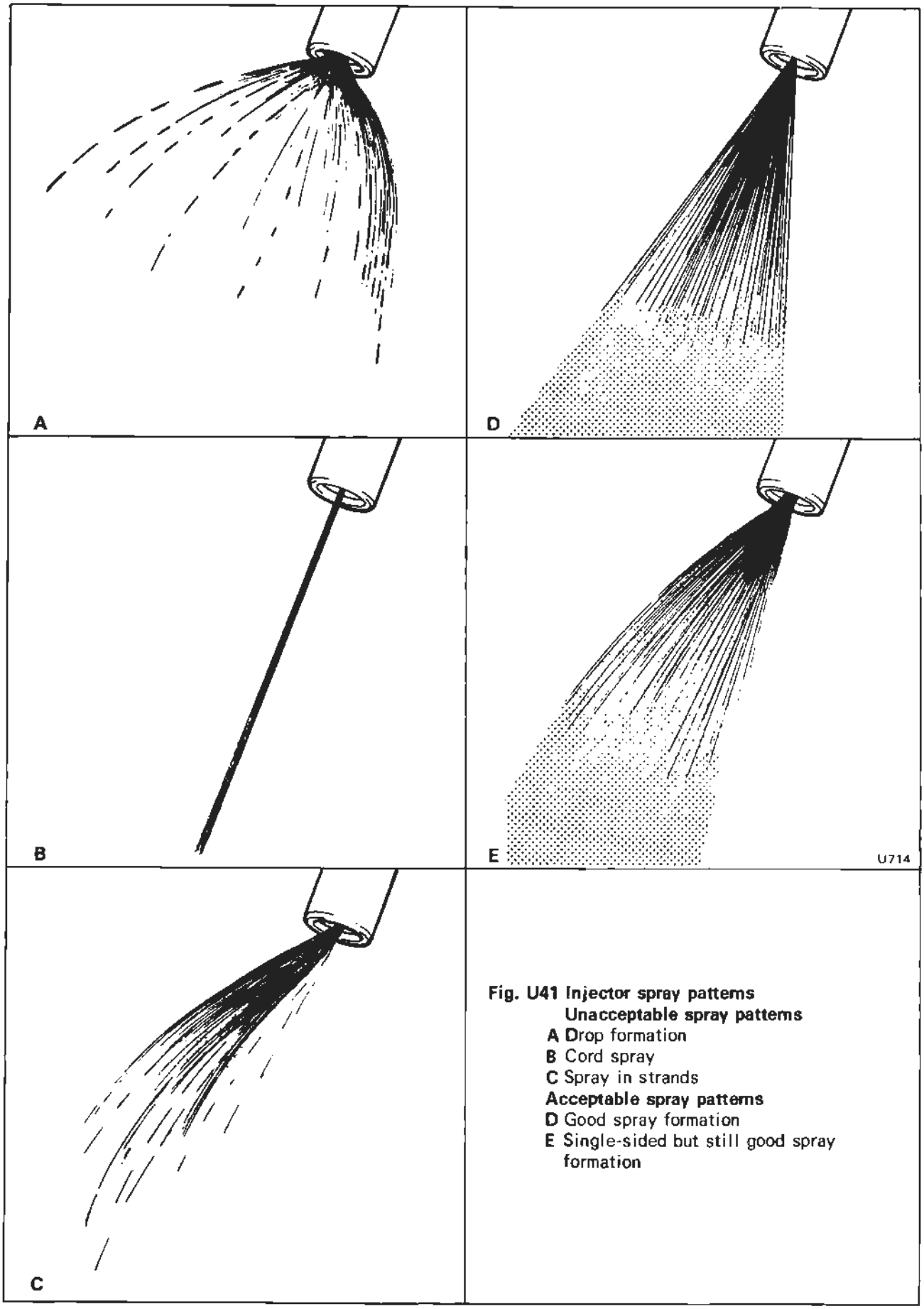

Fig. U41 Injector spray patterns

Unacceptable spray patterns

A Drop formation

B Cord spray

C Spray in strands

Acceptable spray patterns

D Good spray formation

E Single-sided but still good spray formation

Printed in England

© Rolls-Royce Motors Limited 1980

Procedure 10 Checking the delivery balance of the fuel distributor

1. Fit the delivery quantity comparison tester (RH 9613, Bosch No. KDJE 7455). Refer to Page U2-41.
2. Remove the air intake ducting to reveal the air sensor plate.
3. Bridge the engine running sensor (see Page U2-42) and switch on the ignition.
4. Bleed the test equipment.
5. This test is carried out under simulated idle, part load and full load conditions as follows.

Idle conditions

6. Press switch number one on the test equipment and move the air flow sensor plate downwards (using the adjusting device shown in Figure U42), until the reading on the small rotameter indicates a flow approximately 6.7 cc/min.
7. Test the remaining outlets and determine which one has the lowest fuel delivery.
8. Press the switch of the outlet with the lowest fuel delivery and using the adjusting device, adjust the height of the air flow sensor plate until the reading on the rotameter is 6.7 cc/min.
9. Measure the fuel delivery from each outlet, noting that none of them should exceed 7.7 cc/min.

Part load conditions

10. Repeat Operations 6 to 9 inclusive, moving the air flow sensor plate downwards, until a fuel delivery of 20.8 cc/min. is measured (on the large rotameter) from the fuel outlet with the lowest delivery.
11. Measure the fuel delivery from each outlet, noting that it should not exceed 22.4 cc/min.

Full load conditions

12. Repeat Operations 6 to 9 inclusive, moving the air flow sensor plate further downwards, until a fuel delivery of 94 cc/min. is measured from the fuel outlet with the lowest delivery.
13. Measure the fuel delivery from each outlet, noting that it should not exceed 99 cc/min.
14. Switch off the ignition and remove the test equipment.

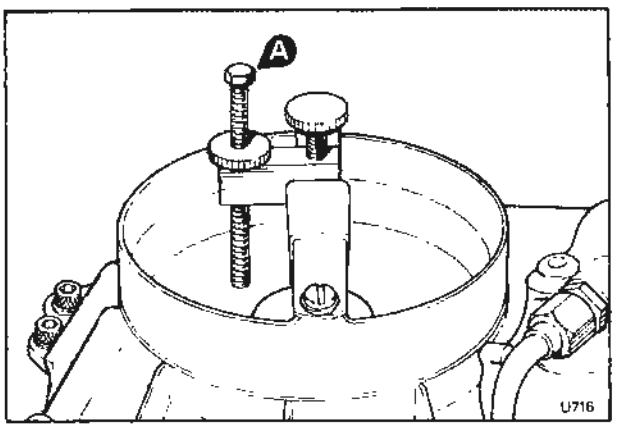

Fig. U42 Air flow sensor plate movement (adjustment device)
A Adjusting screw

If the fuel delivery exceed the limits quoted a new fuel distributor should be fitted.

Procedure 11 Checking the engine idle speed

For details relating to the checking and setting of the idle speed, refer to Idle speed - To set, in the service adjustments section.

Procedure 12 Checking the idle mixture strength

The idle mixture strength should be checked and adjusted in accordance with the instructions given under the heading Idle mixture strength - To set, in the service adjustments section.

The idle mixture strength should always be checked if either a new warm-up regulator or fuel distributor have been fitted.

Procedure 13 Checking the opening of the throttle

1. Unscrew the worm drive clips securing the air intake hose to the throttle body and the mixture control unit.
2. Free the joints and withdraw the hose.
3. Depress the accelerator pedal fully and observe the position of the throttle plate. The plate should be in the fully open position.
4. Ensure that the throttle plate and linkage operate smoothly throughout the test.
5. If the throttle plate does not open fully, or if the linkage does not operate smoothly, investigate and correct the problem, ensuring that the linkage is correctly adjusted (refer to Section U8, Throttle linkage).

Procedure 14 Checking the 'wide open' throttle mixture enrichment

1. Start and run the engine until normal operating temperature is attained.
2. Stop the engine.
3. Fit the 'closed loop' system test meter (RH 9615, Bosch No. KDJE P600). Refer to Page U2-42.
4. Bridge the engine running sensor (see Page U2-42).
5. Ensure that the ignition is switched on.
6. The test meter should read between 45% and 55%, if not refer to Figure U29, 'Closed loop' system.
7. Operate the 'wide open' throttle micro-switch. The test meter reading should increase by 7%. If the test meter reading does not increase, continue to trace the fault using the flow chart Figure U29, 'Closed loop' system.

Procedure 15 Checking the air intake filter and ducting for blockage

1. Remove the air filter element (refer to Air intake filter element - To remove and fit, in the Removal and fitting of components section).
2. Examine the condition of the element and fit a new one if necessary.
3. Inspect the filter housing assembly. Particular attention should be given to the intake 'scoop' that diverts air from behind the front bumper into the filter housing, ensure that this is not obstructed.
4. Slacken the worm drive clip that secures the

flexible ducting to the mixture control unit, ensure that the ducting is not blocked and is in good condition.
5. Slacken the worm drive clips that secure both ends of the rubber hose connecting the mixture control unit to the throttle body. Ensure that this hose is not blocked and is in good condition.
6. Carry out the tests given in the Workshop Procedures 3 and 13.
7. Fit all hoses, clips and the filter element upon satisfactory completion of the tests.

Procedure 16 Checking the cold start system
When checking the cold start system it is essential that the information given in the 'Workshop safety precautions' on Page U2-30 is observed.
Thermal time switch
1. Withdraw the electrical plug from the thermal time switch.
2. Connect a test lamp across the terminals of the plug.
3. Switch on the ignition and 'crank' the engine. The bulb of the test lamp should illuminate. If it does not the electrical connections or wiring are faulty.
4. Produce a test lead using a Bosch electrical plug and two lengths of wire each approximately 50 cm. (19.6 in.) long.
5. Connect the test wires to the thermal time switch via the plug.
6. Refer to Figure U43 and measure the resistance between:
(a) terminals W and G
(b) each terminal and the brass body of the switch. Depending upon the temperature of the switch the resistance measured should be within the values given in Figure U43.
7. If the values do not correspond with those given in the illustration fit a new switch (refer to Thermal time switch - To remove and fit).
8. After the test has been satisfactorily carried out remove the test lead assembly and connect the electrical loom plug.
Cold start injector
9. Detach the electrical plug from the cold start injector.
10. Produce a test lead using a Bosch electrical plug, two lengths of wire and a micro-switch.
11. Unscrew the three setscrews, securing the plenum chamber cover in position, withdraw the setscrews and collect the washers. Remove the cover so that the operation of the cold start injector can be observed.
12. Connect the electrical plug to the cold start injector and the two wires, one to an auxiliary electrical feed and the other to an earth point.
Note
Exercise care to eliminate the possibility of an electrical spark (use the micro-switch to make and break the circuit).
13. Bridge the engine running sensor (see Page U2 - 42).

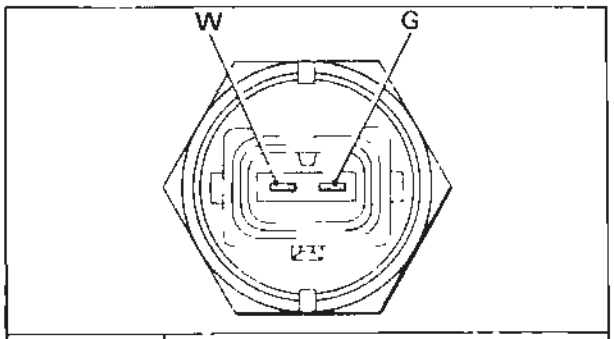

Switch temperature	Resistance - Ohms (meter reading)		
	Between terminal G and earth	Between terminal W and earth	Between terminals G and W
Less than 10°C. (50°F.)	50 - 70	0	50 - 70
More than 20°C.(68°F.)	50 - 70	∞	∞

U715

Fig. U43 Thermal time switch

14. Switch on the ignition.
15. Operate the micro-switch to complete the auxiliary electrical circuit. The cold start injector should spray fuel as the contacts in the micro-switch complete the electrical circuit, if it does not spray fuel fit a new injector.
Note
Release the micro-switch immediately the cold start injector sprays fuel, otherwise the engine will be filled with fuel.
16. Switch off the ignition and remove the auxiliary test lead from the injector.
17. Dry the nozzle of the cold start injector.
18. Switch on the ignition, noting that no drops of fuel should form on or drip from the injector nozzle. If the injector is defective a new one should be fitted.
19. Switch off the ignition, connect the electrical plug and fit the plenum chamber cover, ensuring that the cover sealing ring is in good condition.

Procedure 17 Checking the exhaust gas recirculation (EGR) system
Details for checking the exhaust gas recirculation system are given in Section U3, Exhaust emission control system.

Procedure 18 Checking the engine running sensor
1. Switch on the ignition, the fuel pump should not operate.
2. Switch off the ignition.
3. Disconnect the engine running sensor electrical plug and socket situated approximately 15 cm. (6 in.) along the loom from the sensor.
4. Produce a test lead with an appropriate 'Lucar'

Printed in England
© Rolls-Royce Motors Limited 1982
March 1982
TSD 4200
(California
1980 Model year)

connection on either end and bridge terminals 5 (white/pink) and 7 (pink) on the vehicle loom socket.

5. Switch on the ignition, the fuel pump should operate.

This test isolates the engine running sensor from the circuit. If the fuel pump does not operate check for a fault in:

(a) the white/pink cable from the socket terminal 5 to the fuel pump

(b) the feed to the socket terminal 7

(c) the fuel pump.

6. Switch off the ignition and remove the bridging cable.

7. Connect the engine running sensor loom plug and socket.

8. Bridge the engine running sensor (see Page U2-42).

9. Switch on the ignition, the fuel pump should operate.

This test proves that the engine cranking by-pass, situated inside the engine running sensor is operating.

If the fuel pump does not operate check for a fault in:

(a) the auxiliary white cable on the starter relay (check for 12 volts).

(b) the white/red cable from the starter relay to the loom socket.

10. Check for continuity of the white/black cable from the ignition system ballast resistors to the loom socket.

Normally, a symptom of a fault in this supply is that the engine will start when cranked by the starter motor but stop immediately the ignition key is released.

If the fault diagnosis indicates that the loom and ancillary components are satisfactory, fit a new engine running sensor.

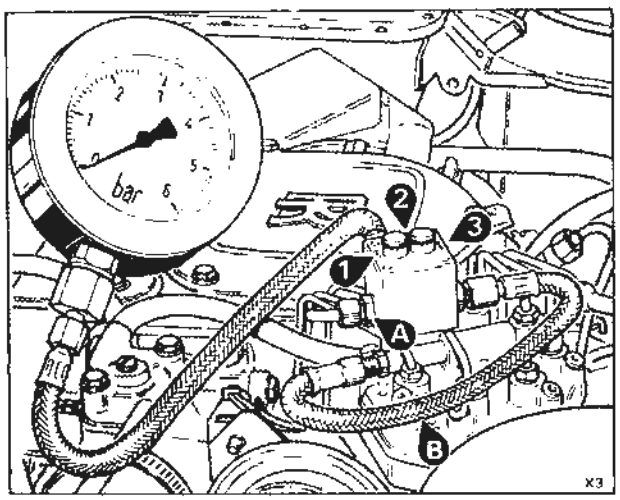

Fig. U44 Pressure tester and adapter

1 To the warm-up regulator
2 To the pressure gauge
3 From the fuel distributor
A Adapter RH 9607
B Hose RH 9645 (KDJE P100/11)

Procedure 19 Checking the fuel accumulator diaphragm for a leak

1. Locate the flexible hose connecting the accumulator to the fuel tank return pipe.

2. Suitably clamp the hose to prevent unpressurised fuel from flowing out during the test.

3. Unscrew the worm drive clip securing the flexible hose to the connection on the fuel accumulator.

4. Withdraw the hose from the connection.

5. Bridge the engine running sensor (see Page U2-42).

6. Switch on the ignition to operate the fuel pump and pressurise the fuel accumulator.

7. Ensure that no fuel flows from the open connection on the fuel accumulator during the test.

8. If fuel does flow from the open connection, the accumulator diaphragm is leaking and a new fuel accumulator must be fitted.

9. Switch off the ignition, connect the fuel pipe and remove the clamp.

Procedure 20 Checking for a faulty overrun valve

1. Unscrew the worm drive clips securing both the inlet and outlet air connections.

2. Withdraw the diaphragm vacuum hose.

3. Unscrew and remove the setscrews retaining the overrun valve to the mounting bracket.

4. Withdraw the overrun valve.

5. Connect a hand operated vacuum pump to the vacuum connection.

6. Ensure that both inlet and outlet connections to the valve are clean and blow down the connection that is offset (see Fig. U14). Air should not pass through the valve.

7. Operate the vacuum pump and continue blowing into the valve.

8. When the reading on the gauge of the vacuum pump approaches 49,5 cm. Hg. (19.5 in. Hg.), the diaphragm should lift the sealing valve from its seat. It should now be possible to blow through the valve, the air coming out through the centre outlet.

9. If the overrun valve does not operate as stated, fit a new assembly, reversing the procedure given for removal.

Fault diagnosis test equipment and special procedures

This section contains information relating to the fitting procedures for the test equipment used when diagnosing a fault. Also included are the special procedures associated with the fuel injection system.

Pressure tester (RH 9612, Bosch No. KDEP 1034) and adapter (RH 9607) - To fit

The pressure tester and adapter are fitted into the control pressure line of the system (see Fig. U44), with this equipment the system can be checked for:

(a) Cold and warm control pressure

(b) Primary system fuel pressure

(c) Fuel system leakage (internal or external)

To fit the test equipment proceed as follows.

1. Disconnect the battery.
2. Depressurise the fuel system (see Page U2-42).
3. Unscrew the union that connects the adapter on top of the fuel distributor to the pipe feeding the warm-up regulator.
4. Ensure that the special adapter (RH 9607) is fitted into the valve block connection number 1.
5. Connect the warm-up regulator feed pipe union to connection number 1 on the change-over valve block of the test equipment.
6. Attach the open connection on the fuel distributor to connection number 3 on the change-over valve block, using the flexible hose RH 9645 (Bosch No. KDJE P100/11).
7. Ensure that the pressure gauge is connected to connection number 2 on the change-over valve block, using the second flexible hose.
8. Bridge the engine running sensor (see Page U2-42).
9. Connect the battery.
10. Disconnect the electric plugs at the warm-up regulator and auxiliary air valve.
11. Let the pressure gauge hang down under its own weight with the flexible hose fully extended.
12. Ensure that both valves on the pressure tester valve block are open and switch on the ignition. The fuel pump should now build-up pressure in the system.
13. Open and close valve screw number 1 on the valve block six or seven times in a 10 second rhythm.
14. After the equipment has been satisfactorily bled lift up the gauge and suspend it from a bonnet catch.
15. Switch off the ignition noting that the pressure gauge and adapter are now ready for use.
16. To remove the test equipment, depressurise the system (refer to Page U2-42) and reverse the procedure.

Note

The valve block of the pressure tester should always be stored with the valve screws open, to relieve any pressure on the sealing rings.

Fuel delivery quantity comparison tester (RH 9613, Bosch No. KDJE 7455)

If there is any discrepancy in the quantity of fuel delivered by the individual fuel distributor outlets, it can be measured by a comparison test, using the test equipment (RH 9613, Bosch No. KDJE 7455). This equipment is illustrated in Figure U45.

The test equipment is designed in such a way that the tests can be carried out without removing the fuel distributor from the engine.

Ideally, the tester should be set permanently on a mobile trolley, so that once it is levelled-up only the trolley needs to be manoeuvred to the test site. However, the tester can be set up on a table close to the test vehicle and the test equipment levelled-up for each test using the levelling screws and spirit level (see Fig. U45).

The test equipment should be fitted to the vehicle as follows.

1. Disconnect the battery.
2. Unscrew the unions securing the fuel injector

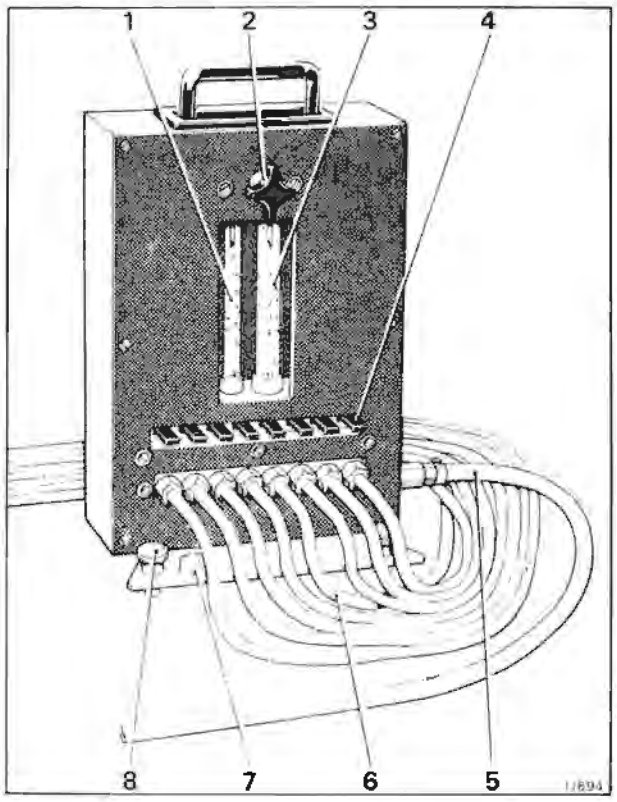

Fig. U45 Fuel delivery quantity comparison tester

1 Small rotameter
2 Three-way valve
3 Large rotameter
4 Fuel delivery key
5 Fuel return line
6 Fuel delivery line
7 Spirit level
8 Level adjusting screw

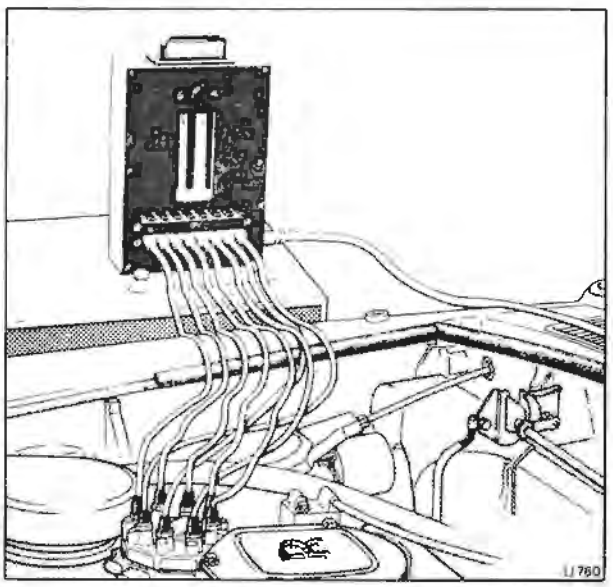

Fig. U46 Installation of comparison tester

Printed in England

© Rolls-Royce Motors Limited 1982

lines to the fuel distributor outlets.
3. Screw the special adapters supplied with the test equipment, into the fuel distributor outlets.
4. Fit the automatic couplings fastened on the ends of the test equipment, to the special adapters in the fuel distributor outlets (see Fig. U46).
Note
Outlet one from the fuel distributor should always be nearest to the fuel inlet connection. Figure U47 indicates which test line and switch of the test equipment,are connected to which engine cylinder.

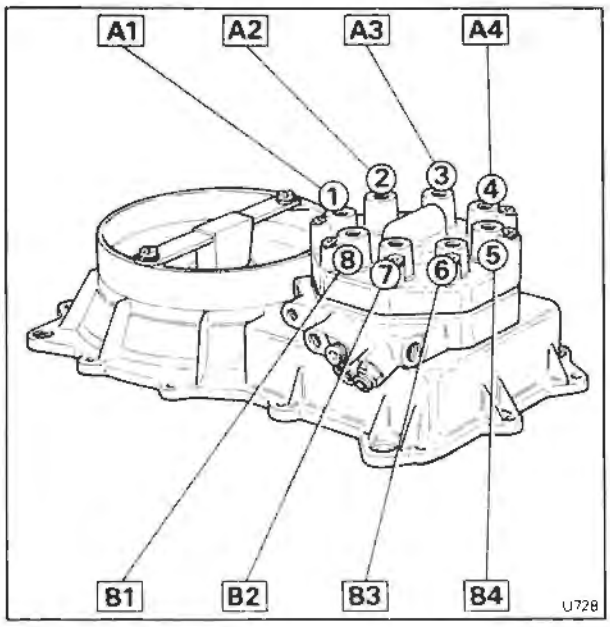

Fig. U47 Fuel distributor connections
○ Key number on test equipment (left to right)
□ Engine cylinder

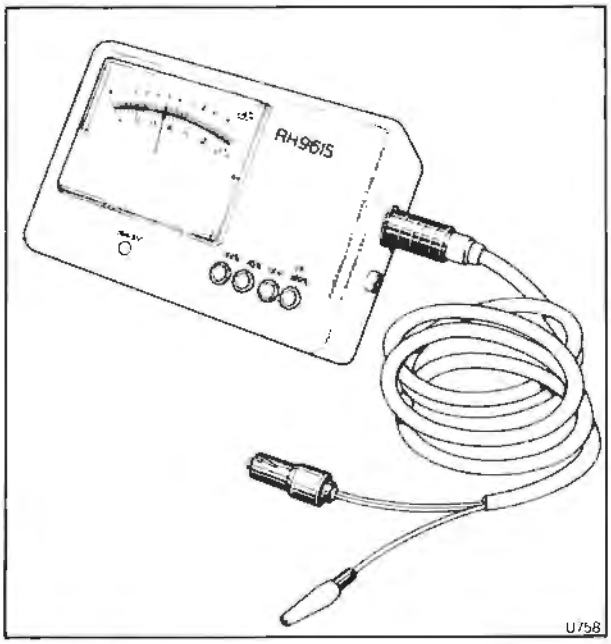

Fig. U48 'Closed loop' system tester

5. Route the fuel return pipe across the engine, along the side of the car and into the filler for the fuel tank.
6. Bridge the engine running sensor (see Page U2-42).
7. Disconnect the electrical plug from the warm-up regulator and the auxiliary air valve.
8. Connect the battery and switch on the ignition. The fuel pump should operate to build-up pressure in the system.
9. To bleed the test equipment, remove the air intake ducting from the mixture control unit and push the air flow sensor plate downwards to its fully opened position. Press each key on the flow-meter one after the other, whilst simultaneously operating the three-way tap. Continue this operation until there are no bubbles in the two rotameters.
10. Allow the air flow sensor plate to return to the zero position and switch off the ignition. The test equipment is now ready for use.
11. To remove the test equipment, depressurise the system (refer to Page U2-42) and reverse the procedure.

'Closed loop' system test meter (RH 9615, Bosch No. KDJE - P600)
1. Ensure that the test meter is positioned on the car floor beneath the main fuseboard (see Fig. U29).
2. Locate the black/slate test cable situated above the side scuttle trim pad on the right-hand side of the vehicle, attach the test connection to the 'Lucar' connector (see Fig. U29).
3. Connect the brown (feed) cable to a known 12 volt supply and the green/yellow cable to a good earth point. For convenience, it is suggested that the cables be fitted to an adapter that will fit into the cigar lighter.
4. Switch on the ignition.
5. The test meter is now ready to be used.
6. When carrying out the tests, it will be necessary to fit a cable between the 2 volts supply connection on the testmeter and the disconnected green cable for the oxygen sensor signal.
Details of all the tests are given in Figure U29.

Bridging the engine running sensor
1. Ensure that the ignition is switched off.
2. Locate the starter relay and the fuel injection system relay situated adjacent to the transmission dipstick (see Fig. U49).
3. Withdraw the white cable 'Lucar' from the fuel injection system relay and the twin white/red 'Lucar' from the starter relay.
4. Connect the white and the twin white/red cables together using a double bladed 'Lucar'.
5. Check that the fuel pump now operates when the ignition is switched on.
Always unbridge the engine running sensor immediately the tests are completed.

Depressurising the fuel system
The fuel in the system may be pressurised (except for the fuel tank and return lines), therefore, unless

the engine has been stationary for a minimum of two hours, it is recommended that the fuel system be depressurised before dismantling any parts of the system.

To depressurise the system proceed as follows.

1. Clean the inlet connection to one of the fuel filters (see Fig. U24).

2. Wrap an absorbent cloth around the joint and carefully slacken the pipe nut to release any pressurised fuel from the system.

3. Tighten the pipe nut.

4. It should be noted that the system will still contain unpressurised fuel.

5. After working on the system, run the engine and check to ensure that there are no leaks.

Water contamination of the fuel

If the fuel system becomes contaminated, it is recommended that the following procedure is adopted to remove the water.

1. Unscrew the union connecting the fuel return line to the fuel distributor.

2. Blow compressed air into the fuel return line to force any fuel in the line into the tank.

3. Slightly jack-up the car on the right-hand side and siphon the fuel from the fuel tank. Lower the jack.

4. Pour one gallon of Exxonvarsol or Shell mineral spirit 135 into the fuel tank and rock the car from side to side, to thoroughly mix the spirit with any water remaining in the tank.

5. Slightly jack-up the car on the right-hand side and siphon the fuel tank. Lower the jack.

6. Repeat Operations 4 and 5 until all the water has been removed from the fuel tank.

7. Locate the fuel tank outlet connection. Unscrew the worm drive clip securing the fuel feed hose and detach the hose.

8. Remove the circlip from the base of the fuel tank outlet connection and withdraw the tank strainer assembly. Collect the rubber sealing ring.

9. Clean the strainer by blowing compressed air through the screen from the inside.

10. Ensure that the rubber sealing ring is in good condition and fit the strainer assembly to the fuel tank, securing it with the circlip.

11. Unscrew the worm drive clip securing the fuel pump feed hose to the inlet connection. Connect approximately 1,82 m. (6 ft.) in length of 11,11 mm. (7/16 in.) internal diameter hose to the fuel pump inlet and the other end of the hose to a suitable container.

12. Connect approximately 1.82 m. (6 ft.) length of hose to the fuel distributor return to fuel tank connection using a nut and nipple (SPM 3290 and SPM 3291). Place the free end of the hose into an empty container of at least 5 litres (1.32 U.S. galls., 1.1 Imp. galls.).

13. Fit new fuel filter assemblies.

14. Remove the fuel injectors and fuel injection lines.

15. Unscrew the worm drive clip securing the mixture control unit air intake ducting. Remove the ducting.

16. Detach the electrical plug from the pressure control valve.

17. Connect the eight auxiliary plastic fuel lines from the fuel delivery quantity comparison tester (RH 9613, Bosch No. KDJE 7455) to the fuel

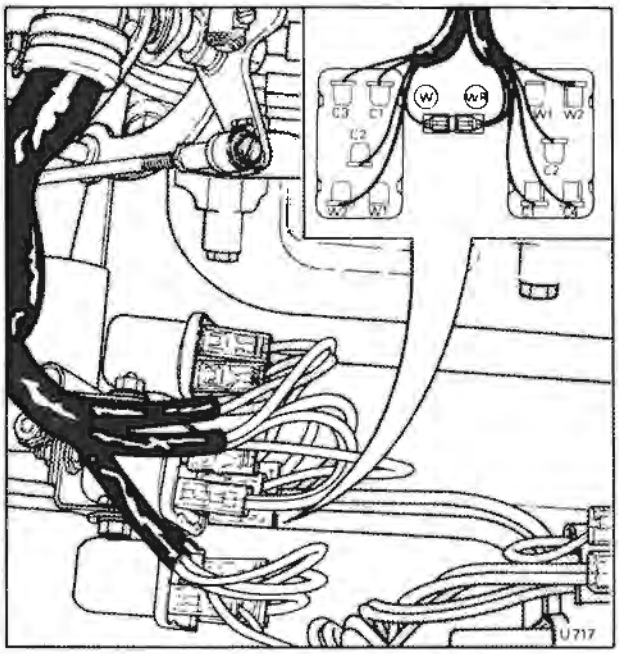

Fig. U49 Bridging the engine running sensor

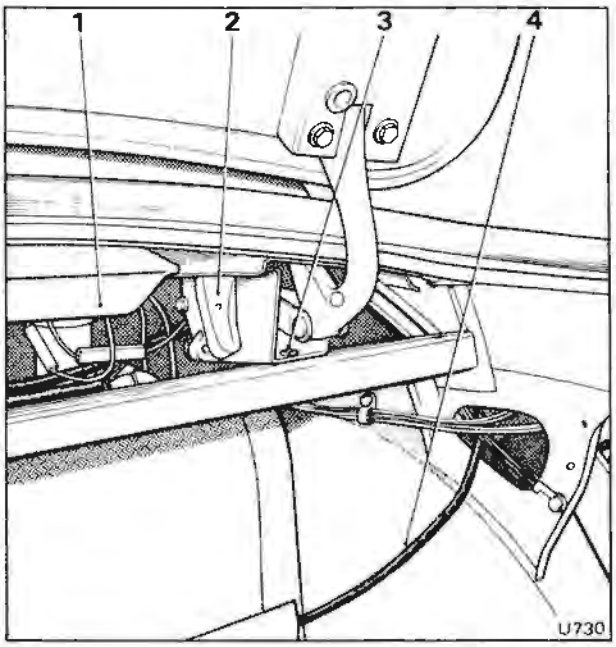

Fig. U50 Luggage compartment lid hinge assembly
1 Interior ventilation duct
2 Hinge assembly
3 Crossmember retaining bolt
4 Fuel gauge unit loom

Printed in England
© Rolls-Royce Motors Limited 1980
January 1980
TSD 4200
(California
1980 Model year)

injection line connections on the fuel distributor. Place the free ends of the plastic fuel lines into the empty container.

18. Pour at least 2,27 litres (4.8 U.S. pts., 4 Imp. pts.) of mineral spirit into the container feeding the pump.

19. Bridge the engine running sensor (see Page U2-42)

20. Switch on the ignition to operate the fuel pump. **Do not allow the fuel pump to run dry.**

21. Press the air flow sensor plate downwards to its maximum open position.

22. Continue to flush the system through until the mineral spirit collected from the plastic fuel lines connected to the fuel distributor, is clean.

23. Test the fuel injectors (see Page U2-36).

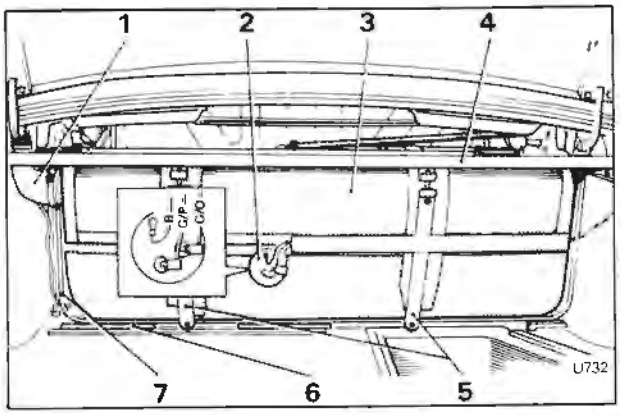

Fig. U51 Fuel tank fittings

1 Fuel filler hose
2 Gauge unit
3 Soundproofing panel
4 Crossmember
5 Securing straps
6 Carpet runner slots
7 Vent to canister (rollover line)

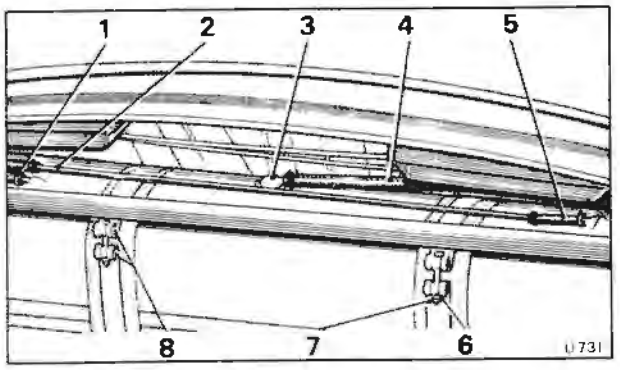

Fig. U52 Fuel tank vent connections

1 Vent - filler neck
2 Fuel tank vent metal pipe
3 Vent to canister
4 Rollover line (metal and rubber)
5 Vent - filler neck
6 Full nut
7 Half-nut (lock-nut)
8 Bridge pieces

24. Fit the fuel injectors and injector lines.

25. Fit new fuel filters.

26. Fit the fuel return line to the fuel distributor.

27. Fit the hose from the fuel tank to the fuel pump inlet connection.

28. Add fuel to the fuel tank and test the engine.

Removal and fitting of components

Before dismantling any connections and removing any components always depressurise the system. Always blank off any open connections to prevent the ingress of dirt.

Fuel tank (see Fig. U21)

The fuel tank is fitted at the forward end of the luggage compartment behind the carpet covered sealing panel (see Fig. U21).

A small expansion tank of approximately 3,12 litres (5.5 Imp. pt., 6.7 U.S. pints) capacity is situated within the main fuel tank to inhibit complete filling and thereby, provide fuel expansion volume to cope with extreme temperature conditions.

When the car is being filled with fuel, the main fuel tank (without an expansion tank) could normally be completely filled, leaving only the filler neck and vent connector pipes to accommodate the expansion of the fuel. Therefore, an expansion tank is situated in the upper part of the main fuel tank and as the fuel level rises above the lower part of the expansion tank it flows inside through two small holes in the base. Two additional holes in the top of the expansion tank allow air to escape.

Fuel tank - To remove

1. Disconnect the battery.

2. Siphon the fuel from the tank.

3. Unscrew the four 'Pozidriv' screws situated across the carpet covered panel. Remove the screws and collect the washers.

4. Withdraw the panel to reveal the fuel tank assembly.

5. Remove the crossmember (see Figs. U50 and U51); this is secured by a nut, bolt and washer to the bottom of each luggage compartment lid hinge assembly.

6. Disconnect the three electrical cables from the fuel tank level gauge (see Fig. U51).

7. Remove the tape from the electrical loom by peeling it back from the fuel tank. Tape the electrical loom away from the vicinity of the fuel tank.

8. Remove the steel clips securing the three rubber vent hoses to their respective connections on the fuel tank (see Fig. U52); withdraw the hoses.

9. Unscrew the worm drive clip securing the rubber filler neck hose to the fuel tank (see Fig. U51); withdraw the hose.

Blank off the fuel tank connection.

10. From beneath the car, detach the fuel tank feed and return connections.

To disconnect the fuel feed pipe locate the fuel

pump and unscrew the worm drive clip securing the flexible hose from the tank to the pump.

Disconnect the return pipe by unscrewing the union that secures the pipe to the tank. The connection is a threaded union and an olive.

Blank off the fuel tank connections.

11. Unlock and unscrew the half-nut from each of the two tank retaining strap bolts (see Fig. U52).

12. Unscrew the full nut from each of the two tank retaining strap bolts (see Fig. U52).

13. Withdraw the bolts and collect the four bridge pieces from the end of the retaining straps (see Fig. U52).

14. Bend the retaining straps and carefully withdraw the fuel tank assembly.

Fuel tank - To fit

1. Clean the forward area of the luggage compartment.

If blanking plugs, nuts, washers, etc. remain in this area when the fuel tank is fitted, they could become the cause of noise which may prove difficult to eradicate once the fuel tank is in position.

Also, ensure that the battery is disconnected and the necessary standard workshop precautions are carried out.

2. Ensure that the self-tapping screws that secure the pipe retaining clips beneath the car do not protrude too far into the luggage compartment. Extra long screws could puncture the fuel tank.

3. Fit the strips of Compriband into position. Also fit the Compriband pad around the large hole in the luggage compartment floor.

The Compriband and the two rubber blocks should be secured in position using an appropriate adhesive such as Dunlop S81. The two rubber blocks fit approximately 5,08 cm. (2.0 in.) above the luggage compartment floor on the panel dividing the compartment from the car interior.

The position of all mounting strips are shown in Figure U53.

4. Fit the four fuel tank securing straps to the body (see Fig. U53). The two upper mountings are similar and are shown in Figure U53 - Inset A. The two lower mountings are different, the left-hand mounting is shown in Figure U53 - Inset B, where the bolt passes through the body and is retained by a nut. The right-hand mount is shown in Figure U53 - Inset C, where the bolt has a distance piece and screws directly into a threaded bush attached to the body.

5. Fit the sound proofing panel to the fuel tank and secure in position with tape (see Fig. U51). In addition, fit two pieces of tape around the fuel tank so that the securing straps will sit on the tape when the tank is secured in position (see Fig. U51).

6. Bend the securing straps to enable the fuel tank to be fitted.

7. Fit the fuel tank into position, ensuring that the boss on the base of the tank fits into the large hole in the luggage compartment floor.

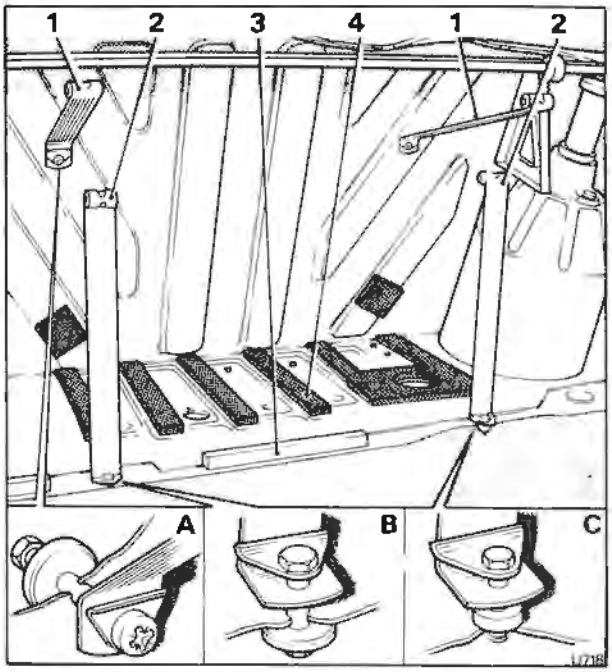

Fig. U53 Fuel tank mounting straps
1 Upper securing straps
2 Lower securing straps
3 Carpet runner slots
4 Compriband rubber

8. Connect the fuel feed (see Fig. U22) hose and return pipe (see Fig. U23).

9. Secure the fuel tank in position as follows (see Fig. U51).

10. Fit a bridge piece to the end of each securing strap and secure the fuel tank in position by fitting the long bolt, downwards, through the upper and lower securing strap bridge pieces. Screw a full nut onto the bolt.

11. Repeat Operation 10 to the second set of securing straps.

12. Tighten the full nut of each set of securing straps and lock in position by fitting an additional half-nut to each of the two bolts.

13. Fit the rubber intake pipe to the fuel tank neck and secure the end of the hose with a worm drive clip.

14. Fit the two fuel intake assembly rubber hoses to the fuel tank vents. One hose connects directly to the vent, the second hose connects to the vent on the other side of the fuel tank via a metal pipe which is fitted across the top of the tank (see Fig. U52).

Secure the ends of the hoses with new steel clips.

15. Fit the rubber hose of the rollover tube to the fuel tank centre connection (see Fig. U21).

Secure the hose with a new steel clip.

16. Fit the crossmember (see Fig. U51), attaching it to the bottom bracket of each of the two luggage compartment lid hinge assemblies with a short bolt, washer and nut (see Fig. U50).

17. Locate the fuel gauge sender unit electrical

Printed in England
© Rolls-Royce Motors Limited 1980

loom situated above the right-hand rear wheel arch. There are three cables in the loom and these are coloured black, green/orange and green/purple.

Tape the cables across the fuel tank until they are adjacent to the fuel gauge sender unit, as shown in Figure U51.

18. Connect the cables to the fuel gauge sender unit as shown in the inset of Figure U51.

19. Locate the base of the carpet covered panel into the wooden runner slots (see Fig. U51) and secure the top of the panel with four 'Pozidriv' screws and washers to the crossmember.

20. Connect the battery.

Fuel filler - To remove (All cars except Corniche Convertible)

1. Disconnect the battery.

2. Unscrew and remove the four 'Pozidriv' screws situated across the carpet covered sealing panel at the forward end of the luggage compartment.

3. Withdraw the carpet covered sealing panel to reveal the fuel tank assembly.

4. Remove the steel clips securing the two rubber hoses to the two outer vents on the top of the fuel tank and withdraw the hoses. One hose fits directly on to a vent while the other fits to a metal pipe which extends across the width of the fuel tank.

5. Unscrew the worm drive clip securing the fuel inlet hose to the fuel tank; withdraw the hose and blank off the fuel tank inlet.

6. From inside the car remove the trim panel that covers the filler assembly, this is situated adjacent to the rear window.

On all cars except the Silver Wraith (fitted with a small rear window) unscrew the two screws from the wooden finisher fitted around the rear window. Carefully withdraw the trim panel to reveal the upper connection for the fuel filler.

7. Unscrew the worm drive clip securing the fuel filler hose to the fuel filler head. Withdraw the fuel filler neck assembly downwards into the luggage compartment.

8. Open the fuel filler flap. Unscrew and remove the fuel filler cap.

9. Using a screwdriver, unscrew and remove the six screws securing the fuel filler head to the body, collect the washers from the retaining screws and withdraw the fuel filler head assembly.

Fuel filler - To fit (All cars except Corniche Convertible)

Fit the fuel filler assembly by reversing the procedure given for removal, noting the following.

1. When fitting the fuel filler head to the body ensure that the restrictor is in its lowest position.

Fuel filler - To remove (Corniche Convertible)

1. Remove the carpet covered sealing panel from the forward end of the luggage compartment.

2. Disconnect the two rubber hoses from the outer vents on top of the fuel tank.

3. Unscrew the upper and lower worm drive clips from the fuel filler neck assembly, withdraw the assembly and blank off the fuel tank.

4. Open the fuel filler flap. Unscrew and remove the fuel filler cap.

5. Using a screwdriver, unscrew and remove the six screws securing the fuel filler head to the body, collect the washers from beneath the heads of the screws. Withdraw the assembly.

Fuel filler - To fit (Corniche Convertible)

Fit the fuel filler assembly by reversing the procedure given for removal.

Fuel pump - To remove and fit (see Figs. U22 and U54)

1. Disconnect the battery, and depressurise the fuel system (see Page U2-42).

2. Disconnect the electrical cables from the fuel pump, identify each to facilitate assembly.

3. Clamp the flexible fuel hose connecting the fuel tank to the fuel pump.

4. Unscrew the worm drive clip securing the fuel supply hose to the fuel pump inlet connection. Blank off the fuel pump connection.

5. Hold the fuel pump outlet with a spanner and unscrew the 'banjo' type bolt, blank the open connections.

6. Unscrew the three nuts securing the fuel pump via the rubber mounting pads to the mounting brackets. Collect the washers.

7. Carefully push the fuel pump upwards to release the one mounting stud from the mount bracket and then turn the pump slightly as it is manoeuvred to free the two mounting studs on the other side of the pump.

Note

It may be necessary to slacken the two setscrews securing the mounting bracket to the car body underfloor during this operation.

8. Unscrew the nut securing the clamp bracket around the fuel pump body, collect the washer. Withdraw the clamp bracket bolt, collecting the distance piece and washer. Repeat this operation on the second clamp bracket.

9. Fit the pump by reversing the removal procedure, noting that the fuel pump body rubber insulation strips situated in each clamping bracket are in a good condition. Also, that the sealing washers situated on the pump outlet 'banjo' bolt are in good condition.

When tightening the 'banjo' bolt ensure that the pump outlet connection is held firmly with a spanner, otherwise the flexible fuel pump mounts may be strained.

Figure U54 gives details of the fuel pump mounting.

Fuel accumulator - To remove and fit (see Figs. U23 and U55)

1. Disconnect the battery and depressurise the fuel system (see Page U2-42).

2. Unscrew the unions on both inlet and outlet

connections to the fuel accumulator, suitably blank the open connections.
3. Detach the hose from the rear of the assembly and blank the open connections.
4. Support the fuel accumulator and unscrew the two setscrews securing the mounting bracket to the car body underfloor. These setscrews are situated one on either side of the accumulator and as they are withdrawn, collect the two washers fitted under the head of each one.
5. Unscrew the nut securing the clamp bracket around the fuel accumulator body. Withdraw the clamp bolt, collecting the distance piece and washer.
6. Collect the rubber grommet and distance piece from each side of the bracket.
7. Fit the fuel accumulator by reversing the removal procedure, noting that the rubber insulation strip and two rubber grommets fitted to the mounting bracket are in good condition.

Figure U55 gives details of the fuel accumulator mounting.

Fuel filters - To remove and fit (see Figs. U24 and U56)
1. Disconnect the battery and depressurise the fuel system.
2. Unscrew both filter outlet pipe unions and blank the open connections.
3. Unscrew the filter inlet pipe union and blank the open connections.
4. Unscrew the 'banjo' bolt from the inlet connection on both filters and withdraw the bridge pipe. Blank the open connections.
5. Unscrew the setscrew that secures both filter clamp brackets to the mounting bracket. This setscrew is situated in between the filters. Collect the washer from the setscrew and withdraw the two filters.
6. Fit the fuel filters by reversing the removal procedure, noting that the rubber insulating strips situated in each clamping bracket are in good condition. Also, the sealing washers situated on the filter inlet 'banjo' bolts are in good condition.

Fuel lines (see Fig. U56)
The fuel lines consist of metal bundy tubing and reinforced fuel resistant rubber hoses.

Metal piping is used where possible and is attached to the body and inner longeron by metal clips (with rubber inserts) and selftapping screws.

Rubber hoses are used where there is a joint or flexibility is required.

Joints in the fuel line on the pressurised (feed) side of the system are usually made by a threaded adapter and union, however, on the unpressurised (return) side of the system a joint is usually effected by a worm drive clip.

Removing or fitting any of the fuel lines is relatively straightforward and reference should be made to Figure U56.

Always depressurise the fuel system before removing any parts connected into the fuel feed lines.

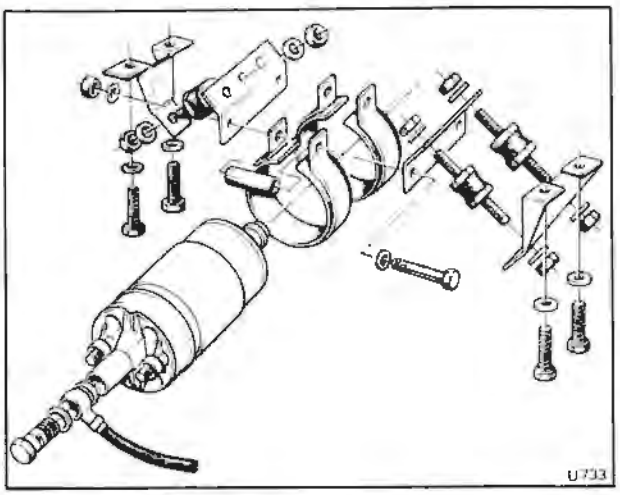

Fig. U54 Fuel pump mounting

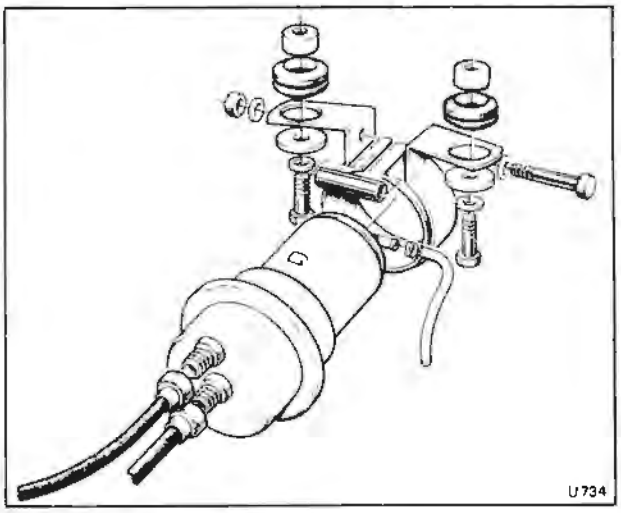

Fig. U55 Fuel accumulator mounting

A non-return valve (see Fig. U56 - Inset A) is situated in the fuel return line in the vicinity of the final drive unit. This valve is fitted to prevent the 'back-flow' of fuel. The valve is a non-serviceable unit and if its operation is suspect a new assembly should be fitted.

Non-return valve - To remove and fit
1. Clamp the rubber fuel pipe before and after the valve.
2. Slacken the worm drive clips either side of the valve and withdraw the pipes.
3. Blank off the open pipe connections if the new valve is not fitted immediately.
4. Fit the valve by reversing the removal procedure noting that the valve is fitted into the fuel line the correct way around; flow directional arrows are situated on the valve body.

Mixture control unit (see Figs. U6 and U60)
The mixture control unit comprises the air meter, the

Printed in England
© Rolls-Royce Motors Limited 1980
January 1980
TSD 4200
(California
1980 Model year)

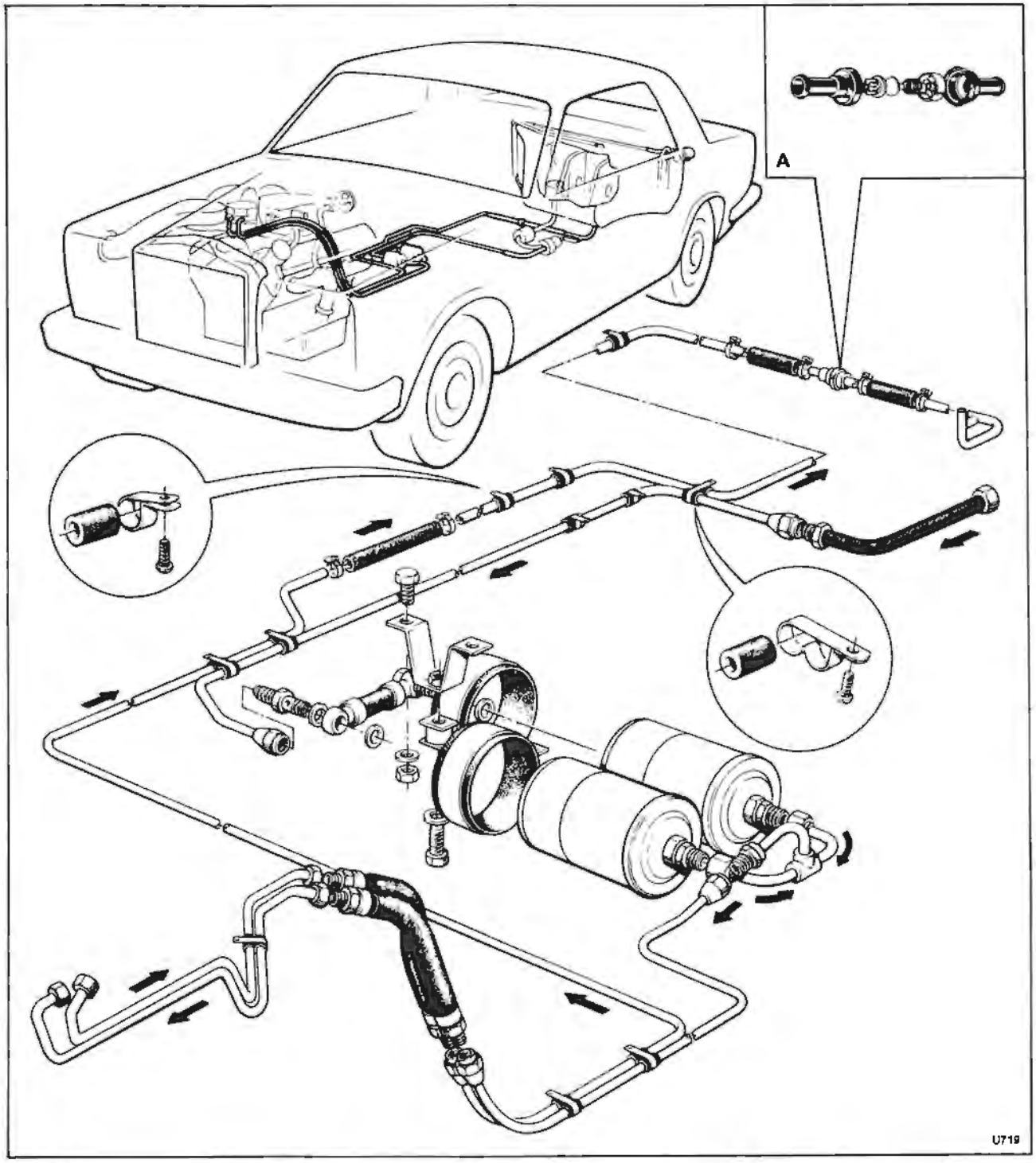

Fig. U56 Fuel pipes and fuel filters mounting

fuel distributor and the primary system pressure regulator.

The fuel distributor and/or the primary system pressure regulator can be removed separately from the assembly, however, in the process of general dismantling the components would be removed as one assembly.

Fuel distributor - To remove and fit

1. Disconnect the battery and depressurise the fuel system.
2. Unscrew and remove the following connections on the fuel distributor.
   (a) the union securing the warm-up regulator feed pipe to the adapter on the top of the fuel distributor.
   (b) fuel supply to the fuel distributor.
   (c) connection to the pressure control valve via the pressure damper.
   (d) fuel supply to the cold start injector.
   (e) fuel return to the fuel tank.
   (f) fuel return from the warm-up regulator.

3. Unscrew the unions from both ends of the eight injector pipes and carefully withdraw the pipes, 'B' bank injector pipes are supported in a bracket situated adjacent to the pressure damper, this bracket is retained by a setscrew which should be unscrewed.
4. Using a screwdriver, unscrew the three securing screws situated on top of the distributor.
5. Lift the fuel distributor from the mixture control unit and discard the rubber sealing ring (resistance will be encountered due to the rubber sealing ring).
6. If the control piston is to be removed, carefully bend the retaining tabs away from the bore of the fuel distributor barrel and withdraw the piston. Clean the control piston in solvent cleaner and lubricate with white spirit.
7. Fit the fuel distributor and control piston by reversing the removal procedure, noting that the rubber sealing ring fitted in between the fuel distributor and mixture control unit must be in a good condition, if in doubt, fit a new sealing ring. When installing the sealing ring ensure that it is lubricated with a suitable grease and that it does not become trapped when the fuel distributor is fitted. This could cause a subsequent air leak which may be difficult to detect.
8. If a new fuel distributor is fitted, leave one of the injector lines disconnected so that the following basic setting can be carried out.
9. Bridge the engine running sensor (see Page U2-42) and switch on the ignition.
10. Turn the idle mixture adjusting screw clockwise using the special 'tee' spanner (RH 9608), until fuel just starts to be delivered at the open outlet on the fuel distributor, then, turn the adjusting screw anti-clockwise one half turn.

The basic setting is now correct and assembly can be continued.

Primary system pressure regulator (see Figs. U8, U57 and U58)

The pressure regulator can be removed and serviced separately from the fuel distributor. A service kit (CD 6113) is available containing a new system pressure regulator seal, push valve assembly and system pressure adjusting shims.
1. Disconnect the battery and depressurise the fuel system.
2. Unscrew the large hexagonal locking screw situated in the side of the fuel distributor (see Figs. U8 and U57).
3. Withdraw the complete pressure regulator and push valve assembly (take care not to lose the shim washer(s) if the regulator plunger and spring become dislodged).
4. Lift off the regulator plunger and spring, collect the shim washer(s).
5. Examine the rubber 'O' ring situated on the end of the regulator plunger. A new 'O' ring can be fitted but the control plunger must remain with the fuel distributor.
6. To fit a new 'O' ring (see Fig. U58) commence by cutting off the old ring with a very sharp blade.

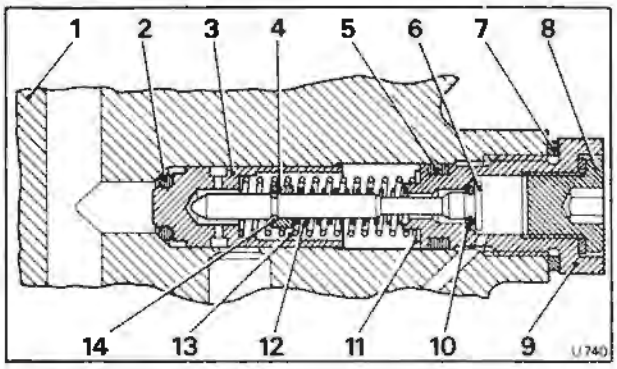

Fig. U57 Primary system pressure regulator valve
1 Fuel distributor housing
2 Sealing ring
3 Regulating plunger
4 Retaining ring
5 Sealing ring
6 Push valve
7 Sealing washer
8 Inner locking screw
9 Outer locking screw
10 Sealing ring
11 Shim washers
12 Push valve spring
13 Regulator spring
14 Circlip

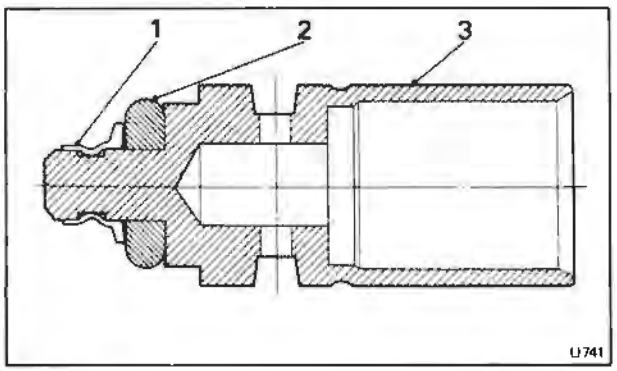

Fig. U58 Regulating plunger sealing ring
1 Crimped retaining ring
2 Sealing ring
3 Regulating plunger

Do not attempt to remove the crimped retaining ring.
7. Draw the new rubber 'O' ring over the crimped retaining ring, using a blunt tool. **Take care not to over stretch the new rubber 'O' ring.**
8. To check that the 'O' ring is correctly fitted and has not been damaged, ensure that it can be turned by hand and that there is a clearance of approximately 0,2 mm. (0.008 in.) between the retaining ring and the sealing ring.
9. To assemble and fit the regulator valve reverse the dismantling procedure using the new push valve assembly and existing shims.
10. Upon the completion of the work, fit the assembly into the fuel distributor and torque tighten the large hexagonal locking screw.

Printed in England
© Rolls-Royce Motors Limited 1980

11. Carry out the workshop procedure for checking the primary system pressure and adjust if necessary using the shims supplied in the service kit, noting that 0,1 mm. (0.004 in.) of shims is equivalent to 0,15 bar (2.17 lbf/sq.in.) of system pressure.
12. Carry out the workshop procedure for checking the fuel system for leaks.

Mixture control unit assembly - To remove and fit (see Figs. U6 and U59)
1. Unscrew the worm drive clip securing the air intake duct, lift the ducting clear of the assembly.
2. Carry out Operations 1 and 3 inclusive given in Fuel distributor - To remove and fit.
Unscrew the worm drive clip securing the air

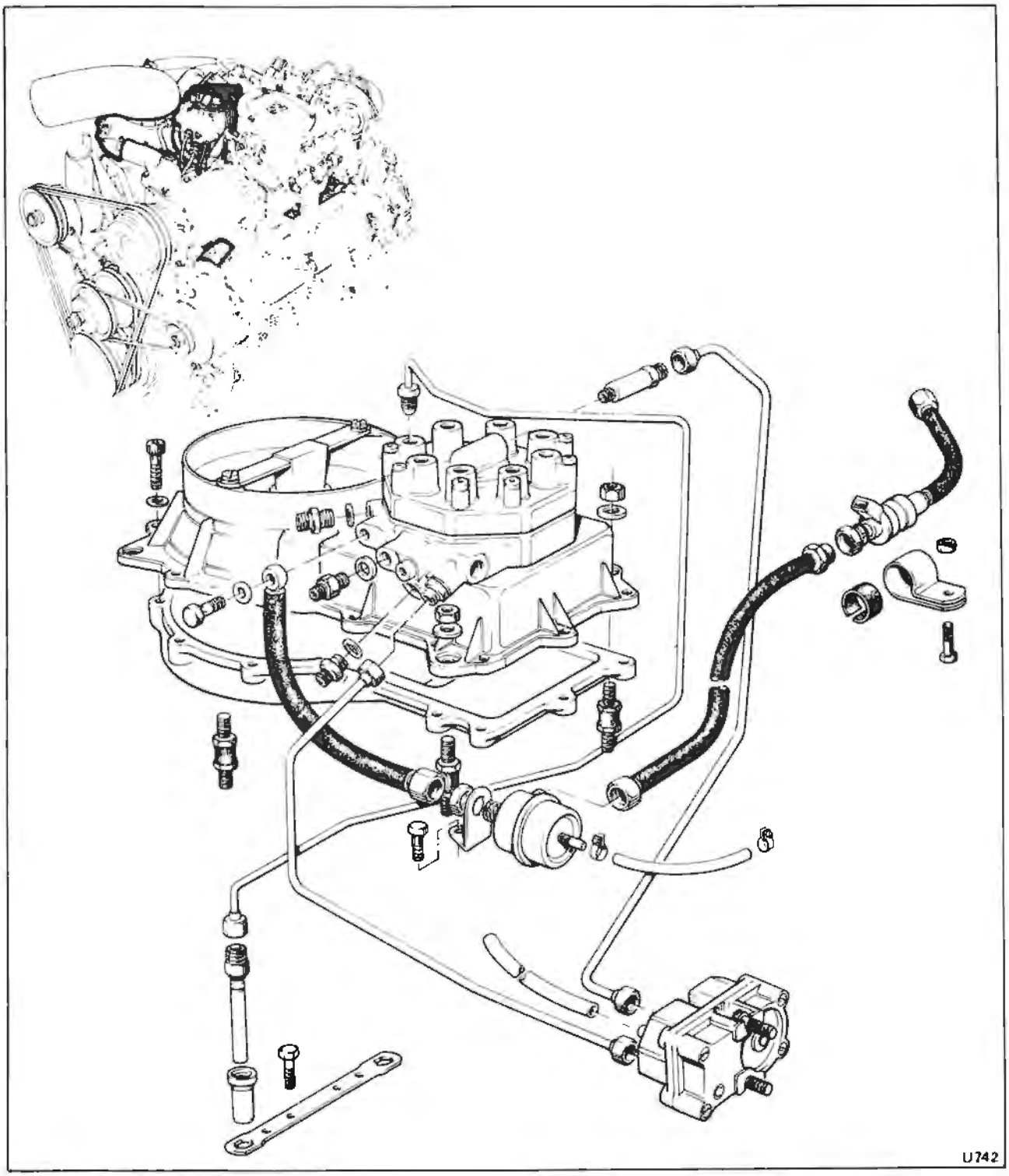

Fig. U59 Fuel distributor and associated components

intake hose to the throttle body.
3. The mixture control unit assembly is secured at three points using rubber mounts.

One mount is situated on a stud fitted into the base of the airmeter, the retaining nut and washer for this mount is situated under a bracket, immediately above A1 cylinder sparking plug.

The other two mounting points are at the fuel distributor end of the assembly. The retaining nut and washer for one side is located immediately below the fuel return connection from the warm-up regulator. The third mounting nut and washer is situated on the opposite side of the casting.
4. Lift the assembly clear of the mountings and slide it out of position, carefully threading it past any pipes and wires.
5. Remove the upper section of the mixture control unit from the lower half (air outlet duct) by unscrewing the cap nuts situated around the face joint.
6. Fit the assembly by reversing the procedure given for removal, noting that the face joint between the two halves of the assembly should be clean and coated with 'Wellseal'.

Throttle body - To dismantle and assemble (see Figs. U13, U62 and U63)
1. Unscrew the worm drive clips securing both ends of the air intake hose that connects the mixture control unit to the throttle body. Withdraw the hose.
2. Locate the throttle linkage attached to the throttle spindle. Unscrew the nut on the end of the spindle, collect the washers and withdraw the linkage and distance piece.
3. Unscrew the worm drive clip securing the hose to the rear (upstream) connection on the auxiliary air valve (see Fig. U62). Free the joint.
4. Unscrew the setscrew securing the metal air pipe to the rear of the plenum chamber.
5. Withdraw the vacuum signal hose from the overrun valve. Label the hose.
6. Detach the electrical cables fitted to the 'wide open' throttle micro-switch mounted on the side of the throttle housing.
7. Detach the three vacuum hoses situated on top of the throttle housing. Label each hose.
8. Unscrew the four setscrews securing the throttle housing to the plenum chamber (the pressure control valve mounting bracket is fitted to the bottom left-hand setscrew), collect the washers.
9. Withdraw the throttle body assembly and discard the gasket.
10. Unscrew the worm drive clip securing the air hose to the 'offset' connection on the overrun valve, free the joint.
11. Unscrew the two setscrews securing the metal pipe to the base of the throttle body, collect the washers, free the joint and withdraw the metal pipe. Discard the gasket.
12. Locate the air pipe fitted on the micro-switch side of the throttle body. Unscrew the two setscrews, collect the washers and discard the gasket.

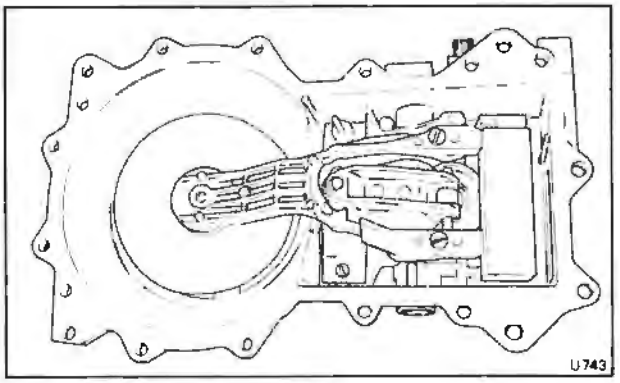

Fig. U60 Air flow meter assembly (inverted)

13. Slacken the worm drive clip securing the rubber hose to the centre connection on the overrun valve.
14. Unscrew the two setscrews retaining the overrun valve to the mounting bracket, withdraw the overrun valve.
15. Unscrew the two setscrews securing the mounting bracket to the throttle body, withdraw the mounting bracket complete with the micro-switch assembly.
16. Unscrew and remove the nut and screws, collect the washers and withdraw the micro-switch from the mounting bracket.
17. Unscrew the two setscrews situated on top of the throttle body, withdraw the vacuum connection housing complete with the engine idle air bleed adjusting screw. Discard the gasket.
18. Unscrew the nut from the throttle spindle and collect the washers and micro-switch operating cam.
19. Close the split legs of the throttle plate retaining screws and unscrew the retaining screws.
20. Open the throttle and carefully withdraw the throttle plate from the throttle spindle.
21. Withdraw the throttle spindle and remove the seals. Note the way the spindle is fitted in relation to the throttle body to ensure correct reassembly.
22. Assemble the throttle body by reversing the procedure given for removal, noting the following.
(a) Ensure that the throttle plate is fitted in its original position.
(b) Use new throttle plate retaining screws. Ensure that the throttle plate is positioned correctly and closes completely before tightening the screws. Always spread the split ends of the screws to prevent them turning.
(c) Ensure that the throttle spindle end seals are correctly fitted and seat just below the spindle housing flange.

Warm-up regulator - To remove and fit (see Figs. U25 and U61)
1. Disconnect the battery and depressurise the fuel system.
2. Detach the electrical plug.
3. Unscrew the fuel feed and return pipe connections.
4. Unscrew and remove the two retaining setscrews

Printed in England
© Rolls-Royce Motors Limited 1980
January 1980
TSD 4200
(California
1980 Model year)

situated one on either side of the assembly.
5. Fit the assembly by reversing the removal procedure, noting that the retaining setscrews should be positioned through the holes in the base of the unit (not through the additional access holes at the top) (see Fig. U61). In addition, the unions fitted to the assembly should be checked for tightness before the pipes are connected, otherwise a leak may occur.

Pressure control valve damper - To remove and fit (see Figs. U16 and U59)
1. Disconnect the battery and depressurise the fuel system.
2. Slacken the small worm drive clip securing the hose from the oil filter housing to the damper. Withdraw the hose.
3. Unscrew the inlet and outlet unions to detach both pipes.
4. Unscrew the large lock-nut retaining the damper assembly to the mounting bracket.
5. Fit the assembly by reversing the removal procedure.

Pressure control valve - To remove and fit (see Figs. U17 and U59)
1. Disconnect the battery and depressurise the fuel system.
2. Disconnect the electrical plug.
3. Disconnect the fuel return to tank hose fitted to the rear of unit, by unscrewing the hose union situated on the 'tee' piece approximately 15 cm. (6.0 in.) to the rear of the valve.
4. Unscrew the union to detach the fuel pipe from the front of the unit.
5. Slacken the clamp bracket nut and withdraw the unit.
6. Fit the pressure control valve by reversing the removal procedure, noting that the rubber insulation sleeve fitted between the bracket and valve is in good condition and correctly positioned.

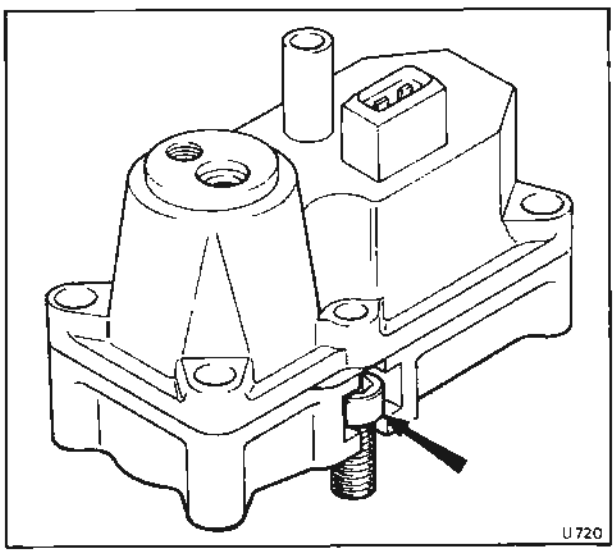

Fig. U61 Warm-up regulator mounting screws

Auxiliary air valve - To remove and fit (see Figs. U26 and U62)
1. Disconnect the electrical plug.
2. Unscrew the worm drive clips securing both of the rubber hoses.
3. Unscrew the two mounting setscrews. Collect the washer fitted under the head of each setscrew and the distance pieces fitted to the lower setscrew.
4. Fit the auxiliary air valve by reversing the removal procedure.

Overrun valve - To remove and fit (see Figs. U14 and U62)
1. Unscrew the worm drive clips securing the rubber hoses to the pipe connections and remove the hoses.
2. Withdraw the small diameter vacuum hose.
3. Unscrew the two setscrews securing the valve to the mounting bracket.
4. Fit the valve by reversing the removal procedure.

Plenum chamber - To remove and fit (see Figs. U2, U62 and U63)
The plenum chamber will normally only require removing if certain parts of the engine are to be dismantled. Therefore, it is not advisable to attempt to remove the chamber as an individual part but as an assembly, with some of the ancillary pipes, hoses and components remaining attached. To remove the plenum chamber assembly disconnect the battery, depressurise the fuel system and proceed as follows.

From the throttle housing side
1. Disconnect the electrical leads to the 'wide open' throttle micro-switch.
2. Disconnect the three vacuum hoses situated on top of the throttle body. Label each hose for identification purposes.
3. Unscrew the worm drive clip securing the air intake hose to the throttle body. Free the hose.
4. Unscrew the nut on the throttle spindle, collect the washers and withdraw the linkage. Replace the nut and washers.
5. Unscrew the bottom left-hand setscrew securing the throttle body to the plenum chamber. Detach the pressure control valve mounting bracket and again loosely fit the setscrew to the throttle body.

From the rear of the assembly
6. Detach the following vacuum hoses and label each to assist identification.
(a) Hose from the speed control bellows.
(b) Hose from the vacuum retard cut-off solenoid.
(c) Hose from the E.G.R. valve.

From the auxiliary air valve side
7. Disconnect the E.G.R. valve feed pipe at the joint just below the heatshield.
8. Detach the electrical plug from the auxiliary air valve.
9. Unscrew the worm drive clip and detach the 'B' bank breather hose from the oil filler housing.

Printed in England
© Rolls-Royce Motors Limited 1980
January 1980
TSD 4200
(California
1980 Model year)

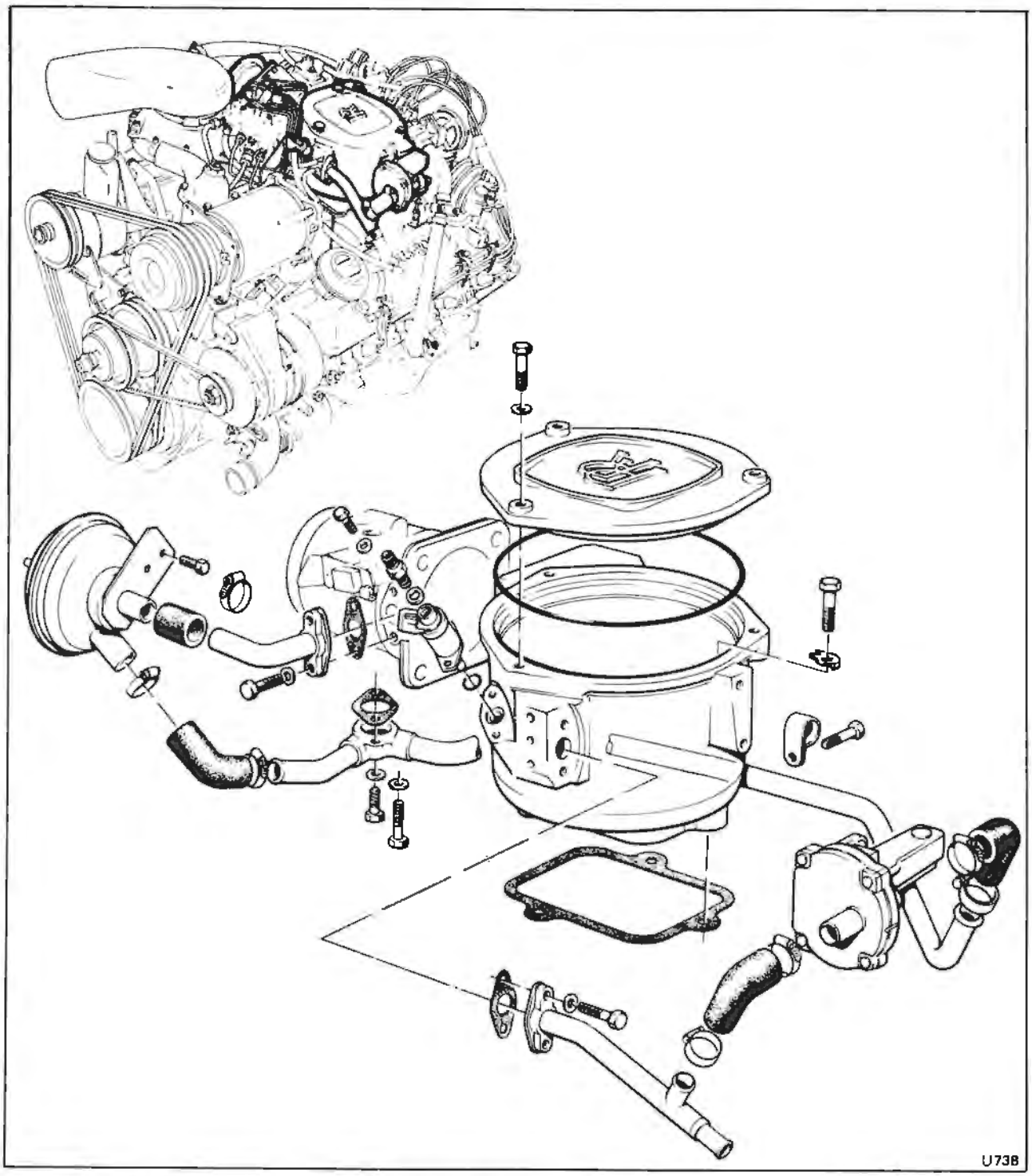

Fig U62 Plenum chamber and associated components

From the front of the assembly

10. Detach the electrical plug from the cold start injector.

11. Unscrew the union securing the fuel feed pipe to the cold start injector.

From on top of the assembly

12. Unscrew the three setscrews retaining the plenum chamber cover in position. Collect the washers and remove the cover carefully manoeuvring it passed the E.G.R. heatshield mount.

Collect the rubber sealing ring.

13. Locate the three retaining setscrews situated in the bottom of the plenum chamber.

14. Tap the tabs on the locking washers back and unscrew the setscrews.

15. Carefully lift the plenum chamber assembly from the engine, taking care to ensure that no hoses or

pipes have been left connected or have become trapped.

16. Collect the gasket fitted between the plenum chamber and the induction manifold.

17. To fit the plenum chamber assembly reverse the procedure given for removal, noting that all gaskets, sealing rings and hoses are in good condition.

Cold start injector - To remove and fit (see Figs. U12 and U62)

1. Disconnect the battery and depressurise the fuel system.

2. Detach the electrical plug from the cold start injector.

3. Unscrew the union connecting the fuel feed pipe

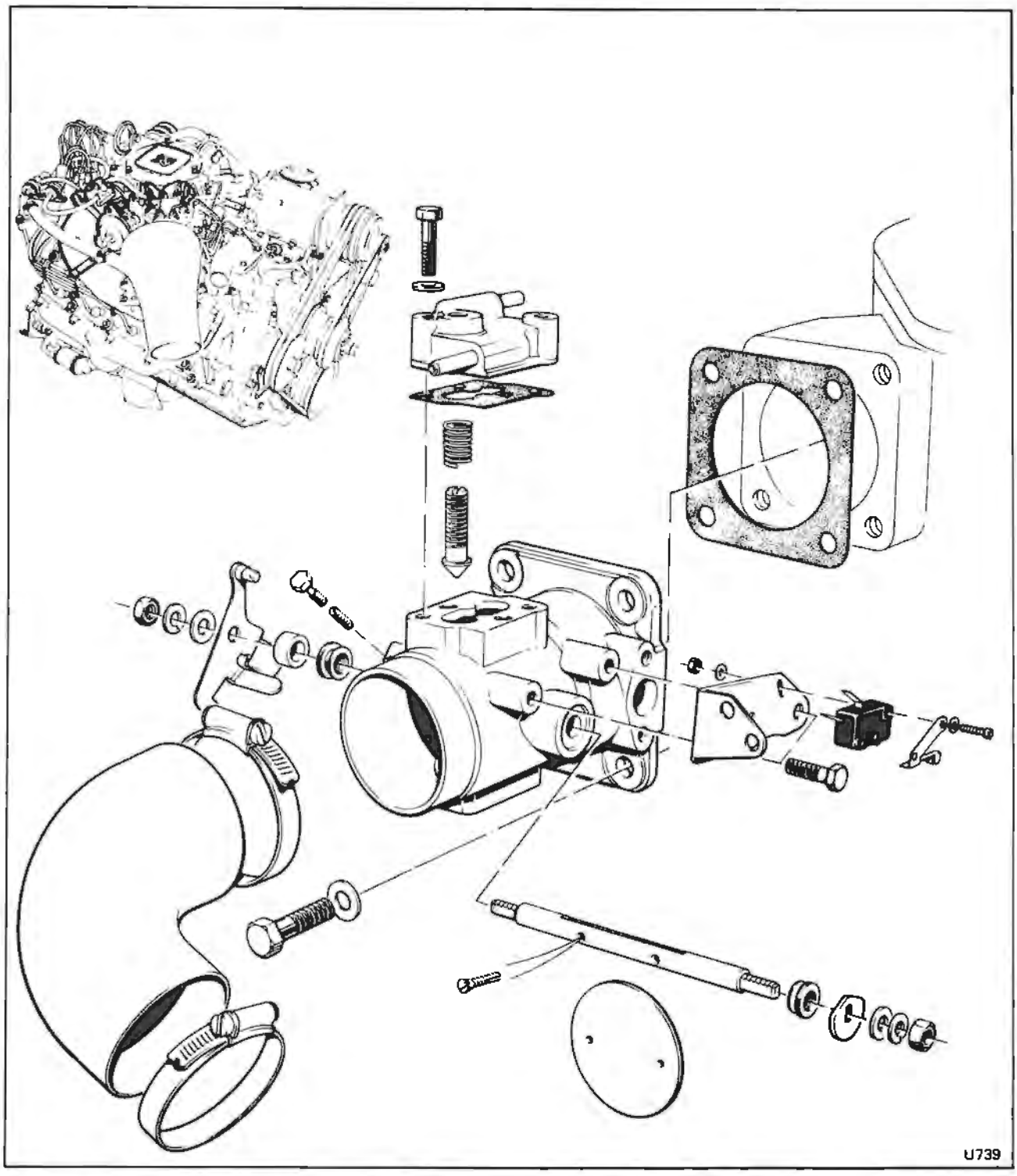

Fig. U63 Throttle housing and associated components

to the injector.
4. Unscrew the two small setscrews retaining the injector in the plenum chamber. Collect the washer from the setscrew.
5. Withdraw the injector and collect the rubber sealing ring.
6. To fit the cold start injector reverse the procedure given for removal.

Thermal time switch - To remove and fit (see Fig. U27)
1. Disconnect the battery and remove the electrical plug from the thermal time switch.
2. Drain the engine coolant (refer to Chapter L).
3. Locate the three thermal switches situated in the thermostat housing adjacent to the refrigeration compressor.
4. Detach the electrical leads and unscrew the E.G.R. cut-out thermal switch (upper) and the vacuum retard cut-out thermal switch (lower), note that each has an aluminium sealing washer.
5. Locate the remaining cold start injector thermal time switch (brass) and carefully unscrew it.
6. Fit the switches by reversing the procedure given for removal, noting that new aluminium sealing washers should be fitted and that care must be taken not to over tighten the switches in the thermostat housing.

Injector - To remove and fit (see Figs. U11 and U59)
There are eight injectors fitted to the engine one for each cylinder. The removal and fitting procedure given below is for one injector but the instructions apply equally to all of the injectors.
1. Disconnect the battery and depressurise the fuel system.
2. Unscrew the union connecting the fuel line to the injector.
3. Unscrew the two setscrews securing the injector retaining plate to the cylinder head.
4. Withdraw the retaining plate and withdraw the injector.
5. All of the injectors can be removed in this way, although if A2 cylinder injector is to be removed it will necessitate the removal of the mixture control unit.
6. Fit the injectors by reversing the procedure given for removal, noting that the rubber insulating sleeve must be in good condition.

It is essential to check the spray patterns of the injectors before they are fitted.

New injectors must be thoroughly flushed out before they are tested.

Electronic control unit - To remove and fit (see Fig. U18)
1. Disconnect the battery and locate the main fuseboard.
2. Unscrew the two nuts situated at the front of the assembly on either side, collect the washer and withdraw the bolts.
3. Disconnect the multi-pin connector plug from the front of the assembly, situated below the fuseboard.
4. Remove the screws securing the rear of the assembly and carefully withdraw the unit.
5. Fit the assembly by reversing the removal procedure.

Oxygen sensor (see Fig. U19)
1. Disconnect the battery.
2. Raise the bonnet and locate the oxygen sensor cable and connection (see Disconnecting the oxygen sensor in the appropriate flow chart of Figure U29). Disconnect the oxygen sensor.
3. Unscrew the oxygen sensor from the exhaust pipe.
4. Fit the oxygen sensor by reversing the removal procedure, noting that the threads of the sensor must be smeared with 'Neverseez' assembly compound. Failure to do this will probably result in serious thread damage when subsequently removing the oxygen sensor.

It is important that 'Neverseez' is applied only to the threads of the unit, take great care not to allow the compound to get onto the slotted shield below the threaded portion.

Torque tighten the oxygen sensor to the figures given in Chapter P.

Engine running sensor - To remove and fit (see Fig. U18)
1. Disconnect the battery and locate the main fuseboard.

The engine running sensor is situated approximately halfway along the electronic control unit on the right-hand side.
2. Disconnect the engine running sensor loom plug, situated approximately 15 cm. (6.0 in.) along the cables.
3. Unscrew the two nuts and cheese-head screws, collect the washers and withdraw the sensor assembly.
4. Fit the engine running sensor by reversing the procedure given for removal.

Air intake element - To remove and fit (see Fig. U64)
1. Unscrew the knurled setscrew located in the centre of the air filter cover; withdraw the cover together with the trunking.
2. Remove the hexagonal nut from the centre stud; withdraw the filter element and the two end plates.
3. To fit the new element reverse the removal procedure.

Air intake - To remove and fit (see Fig. U64)
1. Carry out the procedure for removing the air filter element.
2. Raise the front of the car and support the weight of the car on suitable stands.
3. Remove the right-hand front wheel (see Chapter R, Wheels and tyres).
4. Remove the front underwing sheet.

Printed in England
© Rolls-Royce Motors Limited 1980
January 1980
TSD 4200
(California
1980 Model year)

5. From inside the engine compartment, unscrew the six setscrews retaining the air intake filter element housing to the valance. From under the wing support the weight of the assembly before the final setscrew is removed, withdraw the housing and intake scoop assembly together with the cork gasket.
6. Fit the assembly by reversing the dismantling procedure, noting that a new cork gasket should be fitted.

Service adjustments

Preliminary checks

Before carrying out any tuning, the following basic checks should be made.
(a) Check the condition of the sparking plugs (see Section U6).
(b) Ensure that the throttle linkage is correctly set (see Section U8).
(c) Ensure that the 'wide open' throttle micro-switch is correctly set (refer to this section).
(d) Check all air hose connections for tightness.
(e) Start the engine and visually check the fuel system for leaks.
(f) Whilst the engine is running, check the entire induction system (including the E.G.R. system) for leaks (refer to this section, Workshop procedure 2).

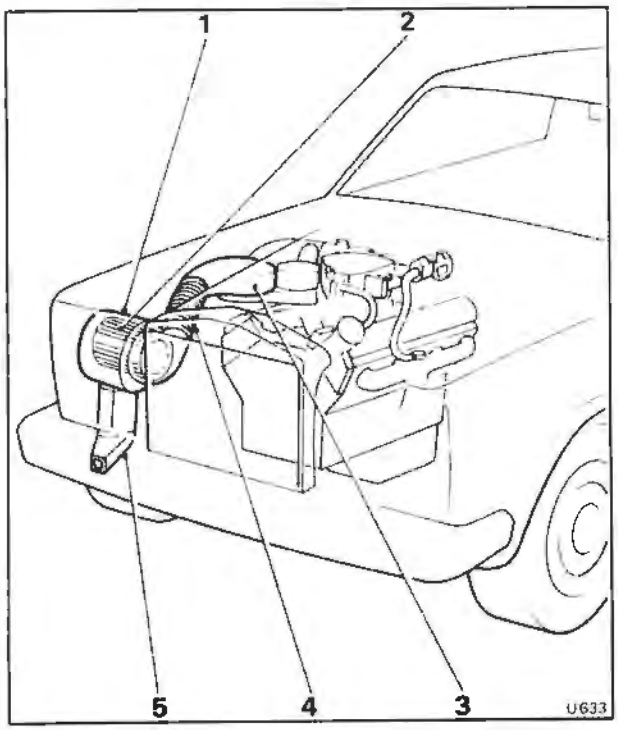

Fig. U64 Air intake system
1 Air cleaner/silencer
2 Paper air filter element
3 Air meter inlet duct
4 Flexible duct
5 Air intake elbow

Before undertaking the tuning procedure the following work should be carried out.
1. Connect an impulse tachometer to the engine in accordance with the manufacturer's instructions.
2. Connect an ignition stroboscopic lamp to the engine in accordance with the manufacturer's instructions.
3. Remove the blank from the exhaust pipe adjacent to the oxygen sensor and fit the sample tapping (RH 9611), connect to a suitable CO meter (e.g. Horiba Mexa 221).
4. Ensure that the engine is at normal operating temperature.

Tuning procedure

If the complete tuning procedure is to be carried out the following sequence of operations is recommended.
(a) Check the ignition timing (see Section U6).
(b) Check the purge flow rate (see Section U4).
(c) Check the mixture strength (refer to this Section).
(d) Check the operation of the E.G.R. system (see Section U3).
(e) Check the engine idle speed (refer to this Section).

'Wide open' throttle micro-switch - To set

1. Slacken the worm drive clips securing the air intake hose to the mixture control unit and the throttle body. Withdraw the hose.
2. Open the throttle plate 60°.
3. Slacken the retaining screws sufficiently to allow the micro-switch to be moved (the micro-switch will pivot around the lower screw).
4. Move the micro-switch upwards until the operating mechanism is clear of the cam on the throttle spindle.
5. Move the micro-switch slowly downwards until the switch is heard to 'click'.
6. Tighten the securing screws, ensuring that the micro-switch does not move.
7. Operate the throttle linkage, noting that as the throttle plate passes the 60°open position the micro-switch is heard to 'click'.
8. Fit the air intake hose and tighten the worm drive clips.

Mixture strength - To set

1. Before commencing to set the mixture strength, unscrew and remove the exhaust pipe blanking plug situated adjacent to the oxygen sensor. Fit exhaust gas sampling adapter (RH 9611) into the pipe.
2. Connect a suitable CO meter (e.g. Horiba Mexa 211) to the exhaust sample probe.
3. The mixture strength should be set when the ambient air temperature is between 15°C. and 30°C. 59°F. and 86°F.) and the engine temperature has stabilised at its normal operating value. The automatic air conditioning system should be switched off and the engine idle speed set at 650 r.p.m.

Printed in England

© Rolls-Royce Motors Limited 1980

Note
To ensure that the engine has stabilised at its normal operating temperature, it should be run for at least 15 minutes after the thermostat has opened. The opening of the thermostat can be detected by a sudden rise in the temperature of the thermostat elbow pipe.

4. Disconnect the purge line at the restrictor. Leave the restrictor fitted into the hose to the engine (see Fig. U65).

5. Disconnect the oxygen sensor cable situated in the rear left-hand corner of the engine compartment (see Fig. U29).

6. Briefly accelerate the engine, allow it to return to the idle speed setting and note the reading on the meter. The CO concentration should be between 0.5% and 0.7%.

7. If the CO value is outside the limits, remove the blanking plug situated on top of the mixture control unit (see Fig. U66) to gain access to the mixture adjusting screw.

8. Insert the mixture adjusting tool (RH 9608) and locate it onto the adjusting screw. Using the adjusting tool turn the adjusting screw to either richen or weaken the mixture.

Turning the adjusting screw clockwise richens the mixture and turning it anti-clockwise weakens the mixture.

9. After making an adjustment, remove the adjusting tool and fit the blanking plug, **failure to fit the blanking plug will result in an inaccurate CO measurement.**

10. Check that the engine idle speed is 650 r.p.m. and adjust if necessary (see Idle speed - To set).

11. Briefly accelerate the engine, allow the engine to return to the idle speed setting and note the Idle CO concentration reading on the meter.

12. Repeat Operations 6 to 10 inclusive until the reading on the CO meter is within the acceptable limits.

13. Upon successful completion of the test, stop the engine and remove the test equipment. Fit the blanking plug to the exhaust sample tapping after smearing the threads with 'Neverseez' assembly compound.

Idle speed - To set

1. To set the idle speed, ensure that the engine has stabilised at its normal operating temperature. This can be achieved by allowing the engine to run at idle speed for at least 15 minutes after the thermostat has opened. The opening of the thermostat can be detected by a sudden rise in the temperature of the thermostat elbow pipe.

2. Disconnect the purge line at the restrictor. Leave the restrictor fitted into the hose to the engine (see Fig. U65).

3. Disconnect the oxygen sensor cable situated in the rear left-hand corner of the engine compartment (see Fig. U29).

4. Ensure that the gear range selector lever is in the 'Park' position.

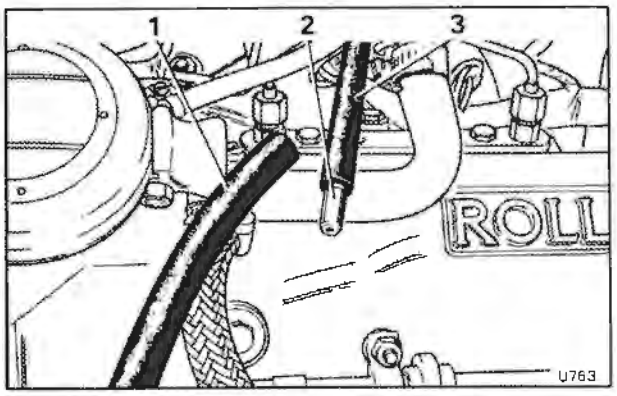

Fig. U65 Disconnecting the purgeline
1 Hose from valance
2 Restrictor
3 Hose to throttle body

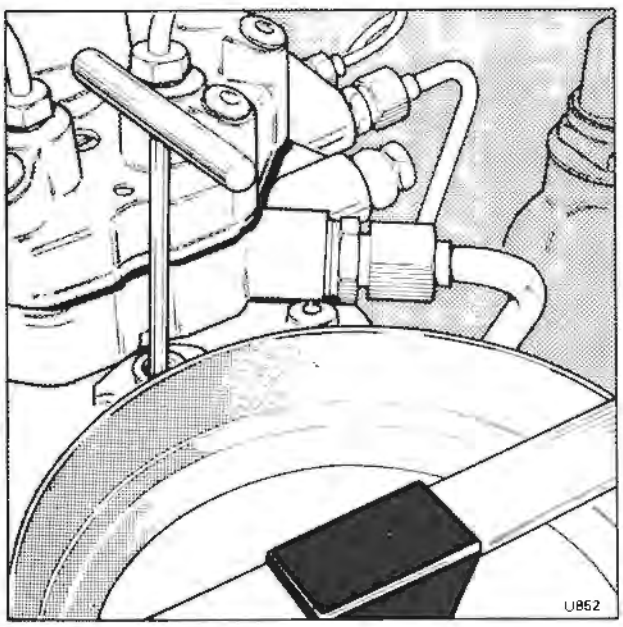

Fig. U66 Adjusting the mixture strength

5. Ensure that the automatic air conditioning system is off.

6. Set the engine idle speed to 650 r.p.m. by turning the adjustment screw situated on top of the throttle body (see Fig. U13).

If a new throttle stop screw (situated on the side of the throttle body) has been fitted, due to either a new assembly being fitted or an overhaul of the existing assembly, a different operation 6 is to be carried out as follows.

Ensure that the **idle adjustment screw** situated on top of the throttle body is screwed fully in. Screw out the **idle speed stop screw** situated on the side of the throttle body, until the engine speed reaches either a minimum speed or 450 r.p.m. Screw in the **idle speed stop screw** to increase the engine speed by 50 r.p.m. Fit the idle speed stop tamperproofing screw and tighten it until the head breaks off.

TSD 4200
(California
1980 Model year)

Screw the **idle speed adjustment screw** anti-clockwise (outwards) until the idle speed is 650 r.p.m.

7. Connect the purge line hose and the oxygen cable to their respective connections.

Note

Connecting the purge line may increase the idle speed and connecting the oxygen sensor cable will tend to restore normal idle speed. Do not attempt to correct these small variations in idle speed.

Section U3

Exhaust emission control system

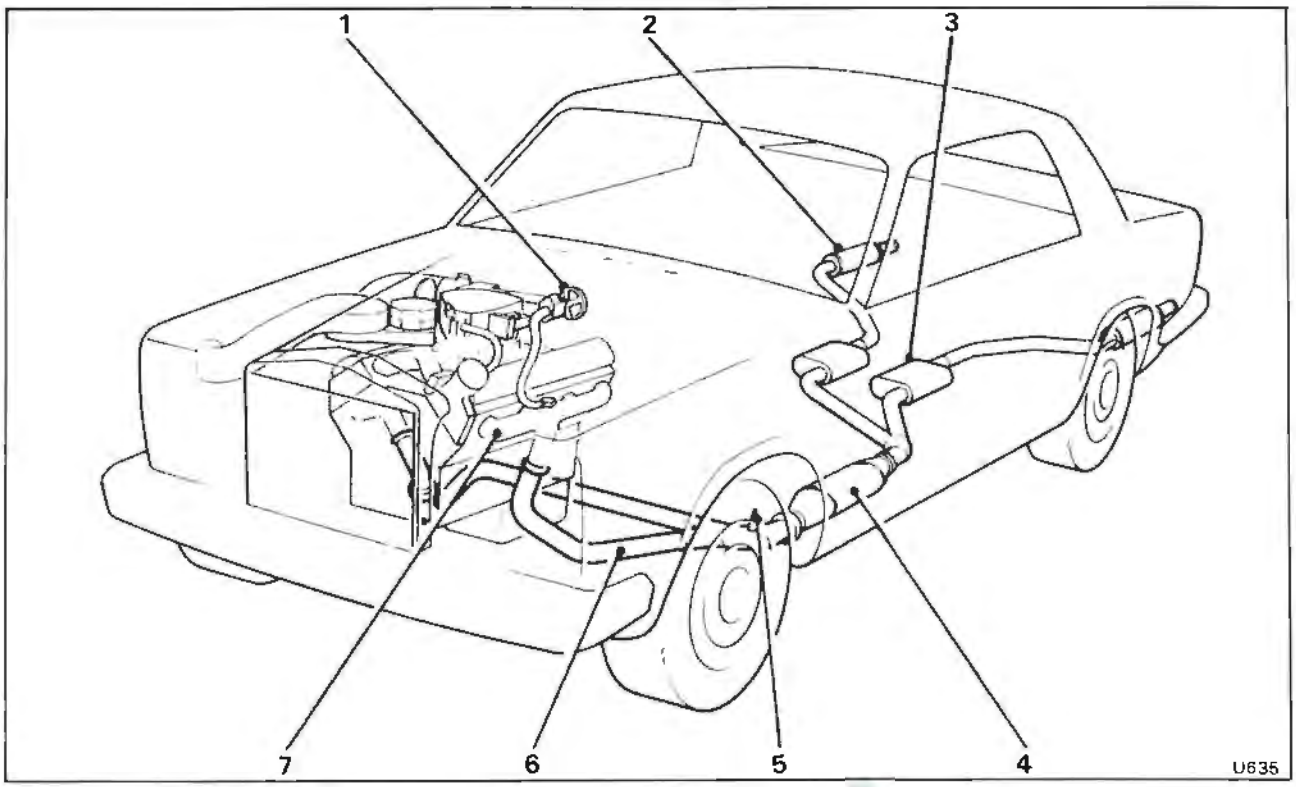

Fig. U67 Exhaust system

1 Exhaust gas recirculation valve
2 Rear silencer
3 Intermediate silencer
4 Catalytic converter
5 Oxygen sensor
6 'B' bank downtake pipe
7 'B' bank exhaust manifold

The exhaust emission control system is designed to reduce the carbon monoxide, hydrocarbon and oxides of nitrogen content in the exhaust gases. To comply with the exhaust emission control regulations, cars built to the 1980 model year specification for California are fitted with a three-way exhaust catalytic converter.

In order to achieve maximum efficiency the catalytic converter requires very accurate control of the engine air/fuel ratio. This has been accomplished by using a continuous fuel injection system with 'closed loop' mixture control (see Section U2).

The exhaust gases are discharged into an exhaust manifold fitted on either side of the engine. From a central take-off on each manifold the exhaust gases pass downwards via the downtake pipes.

The 'A' bank downtake pipe passes under the engine to combine with the 'B' bank downtake pipe just prior to the catalytic converter.

After the catalytic converter the exhaust system reverts back to a dual system with twin intermediate and rear silencers (see Chapter Q, Exhaust system).

Exhaust gas recirculation system (E.G.R.) (see Figs. U67 and U68)

A proportion of the exhaust gas taken from a connection on the top of the 'B' bank exhaust manifold is recirculated through a vacuum operated exhaust gas recirculation (E.G.R.) valve into the plenum chamber, where it mixes with the intake air. Substantially atmospheric pressure is maintained downstream of the metering valve, so that the recirculation flow is proportional to the exhaust gas flow.

Printed in England
© Rolls-Royce Motors Limited 1980

The recirculation of the exhaust gas lowers the peak combustion temperature in the cylinders and thereby, reduces the level of oxides of nitrogen in the exhaust gases.

For details of the servicing and maintenance requirements of the exhaust emission control system, refer to the Service Schedules Manual - TSD 4117.

E.G.R. valve (see Figs. U69 and U70)

The E.G.R. valve has an integral pressure transducer. The metering orifice is incorporated in an extension of the valve seat.

A throttle gated vacuum signal is used to operate the valve. This signal is modulated by the integral transducer and applied to the control valve diaphragm, so that control valve lift is varied to maintain a constant control pressure (just above atmospheric pressure) between the metering orifice and valve seat.

When the engine load is increased, the control pressure exceeds the transducer setting and the transducer valve closes, applying the full vacuum signal to the control valve diaphragm, thus opening the control valve and increasing the E.G.R. flow.

Similarly, as the engine load is reduced, the control pressure becomes less than the transducer setting and the transducer valve opens, venting the diaphragm chamber to atmosphere and causing the control valve to close and reduce the E.G.R. flow.

The transducer valve continuously varies the control valve lift to maintain a constant control pressure under all normal operating conditions.

The use of a throttle gated vacuum signal ensures complete control valve closure at idle to maintain good idle quality.

To improve starting and drive-away during low temperature conditions, a solenoid valve interrupts the throttle gated vacuum signal to the E.G.R. valve, until a predetermined coolant temperature is sensed by a thermal switch located in the thermostat housing.

A micro-switch operated by a cam attached to one end of the throttle spindle actuates this solenoid to cut-out E.G.R. at wide throttle openings.

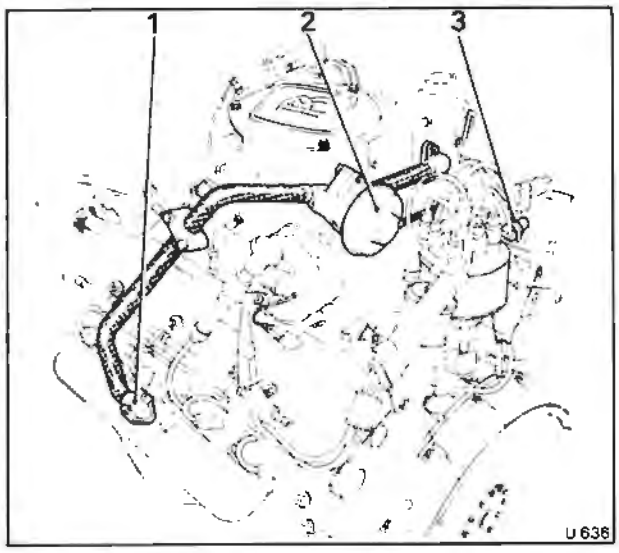

Fig. U68 Exhaust gas recirculation system
1 'B' bank exhaust manifold take-off point
2 Exhaust gas recirculation (E.G.R.) valve
3 E.G.R. cut-off solenoid

E.G.R. valve - To remove and fit

1. Remove the E.G.R. valve heatshield (see Exhaust gas recirculation valve heatshield - To remove and fit).
2. Detach the vacuum signal hose.
3. Unscrew the lower retaining nut and collect the washer.

Note

The upper securing nut is unscrewed to remove the heatshield in Operation 1.

4. Withdraw the valve and discard the gasket.
5. Fit the valve by reversing the procedure given for removal, noting the following points.

(a) Ensure that the valve pintle is secure on the valve stem.
(b) Ensure that the valve and mounting flange faces are clean and free from carbon deposits.
(c) Always use a new mounting flange gasket.

E.G.R. valve - To clean

1. Remove the valve as described in E.G.R. valve - To remove.
2. Using a scraper, remove all carbon film from the valve and mounting flange faces; complete the operation with a wire brush.
3. Clean the carbon from the valve using a wire brush fitted into a portable drill. Take care not to damage the valve seating area.
4. Thoroughly blow out the valve with compressed air to ensure that all loose carbon particles are removed.
5. Upon completion of the cleaning operations, fit the valve to the engine mounting flange.

E.G.R. valve - To check

The E.G.R. system is automatically controlled by exhaust back-pressure to maintain a constant E.G.R. proportion over normal road load conditions. Checks to ensure the correct operation of the valve are only required under no load conditions as follows.

1. Connect an electric impulse tachometer to the engine in accordance with the manufacturer's instructions.
2. Ensure that the parking brake is firmly applied and that the gear range selector is in the 'Park' position.
3. Start and run the engine until normal operating temperature is attained.
4. Ensure that the engine has run at least 15 mins. after the engine coolant thermostat has opened.
5. Allow the engine to return to the idle speed.
6. Increase the engine speed slowly noting the operation of the E.G.R. valve.

7. The E.G.R. valve should commence to open between 1 550 r.p.m. and 1 850 r.p.m.

If the valve either fails to open or opens late check for the following possible causes.

(a) Faulty E.G.R. cut-out temperature switch (see Section U7).
(b) Faulty E.G.R. cut-off solenoid (see Section U7).
(c) Faulty 'wide open' throttle micro-switch (see Section U2).
(d) Faulty wiring.
(e) Leak or blockage in the vacuum signal hose.
(f) Excessive exhaust gas extraction from the tail-pipe (if extraction equipment is used).
(g) Advanced ignition timing (see Section U6).

If the valve begins to open early check for the following possible causes.

(a) Retarded ignition timing (see Section U6).
(b) Excessive exhaust gas back pressure (ensure that there is no tailpipe restriction).

8. If the E.G.R. valve does not function correctly after carrying out Operations 1 to 7 inclusive fit a new valve.

9. Carry out Operations 1 to 7 inclusive with the new valve.

E.G.R. valve heatshield - To remove and fit

1. Locate the heatshield and unscrew the setscrew retaining the heatshield to the plenum chamber cover, collect the washer.

2. Unscrew the setscrew securing the heatshield to the top of the plenum chamber, collect the large diameter washer.

3. Unscrew the long setscrew that forms the lower mounting for the auxiliary air valve. Withdraw the setscrew and collect the washer and distance pieces.

4. Unscrew the nut from the E.G.R. valve top mount, collect the washer.

5. Withdraw the heatshield.

6. Fit the heatshield by reversing the procedure given for removal.

E.G.R. pipes - To remove and fit (see Fig. U68)

There are two E.G.R. pipes joined together adjacent to the auxiliary air valve by a sealing ring and split clamp.

Lower pipe

1. Remove the E.G.R. valve heatshield (see E.G.R. heatshield - To remove and fit)

2. Locate the joint adjacent to the auxiliary air valve, unscrew the two nuts and collect the washers. Free the clamp and withdraw the bolts together with both halves of the clamp bracket. Collect the sealing ring.

3. Unscrew the two nuts from the exhaust manifold joint. Free the joint, withdraw the pipe and discard the gasket.

Upper pipe

4. Detach the vacuum hose from the E.G.R. valve.

5. Unscrew the two setscrews securing the pipe flange to the plenum chamber, collect the washers and discard the gasket.

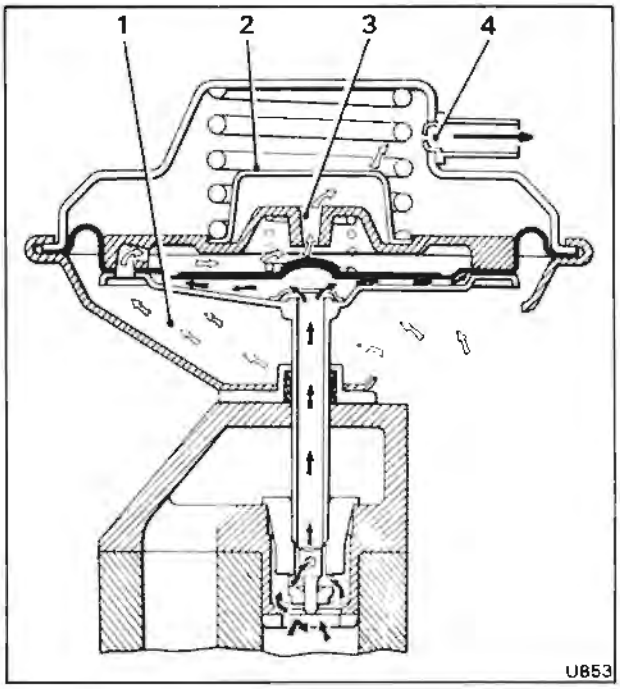

Fig. U69 Exhaust gas recirculation valve
Exhaust pressure below operating value
Ambient air ⇦
Exhaust gas ⬅
1 Ambient air
2 Air filter
3 Air bleed
4 Restrictor

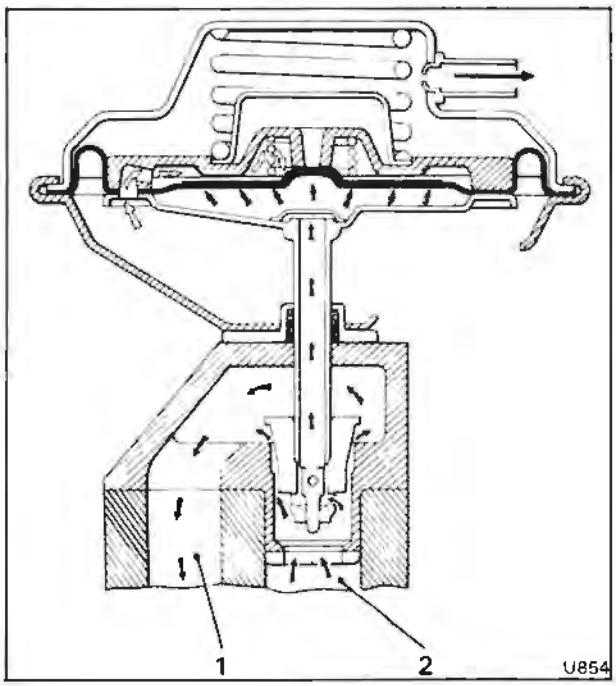

Fig. U70 Exhaust gas recirculation valve
Exhaust pressure above operating value
Ambient air ⇦
Exhaust gas ⬅
1 Exhaust gas to carburetter 'tee' piece
2 Exhaust gas from balance pipe

Printed in England
© Rolls-Royce Motors Limited 1980

6. To fit the pipes reverse the procedure given for removal noting that the joint faces should be clean and flat. Fit new gaskets.

E.G.R. pipes - To clean
1. Remove the E.G.R. valve (see E.G.R. valve - To remove and fit).
2. Remove the E.G.R. pipes (see E.G.R. pipes - To remove and fit).
3. With a pointed scraper clean as much carbon deposit as possible from inside the distribution pipes and joint faces.
4. Using a wire brush complete the cleaning operation on the pipes.
5. Using the pointed scraper carefully remove the carbon deposit from the plenum chamber.
6. Before fitting the E.G.R. pipes thoroughly blow out all the pipes and connections with compressed air.

Three-way catalyst system (see Fig. U71)
The catalytic converter is situated in the front left-hand underfloor area, in place of a conventional front silencer. Exhaust gas from both banks of the engine is combined prior to passing through the converter. The exhaust gas then diverges into the dual exhaust system (see Fig. U67).

A noble metal catalyst on a ceramic monolith support has been chosed for optimum conversion efficiency and rapid warm-up. Three separate blocks are used to minimise the effect of thermal shock and these are positioned to give good gas distribution and effective utilisation of the catalyst volume.

The three-way catalyst promotes reactions between the hydrocarbons, carbon monoxide, oxides of nitrogen and residual oxygen in the exhaust gases.

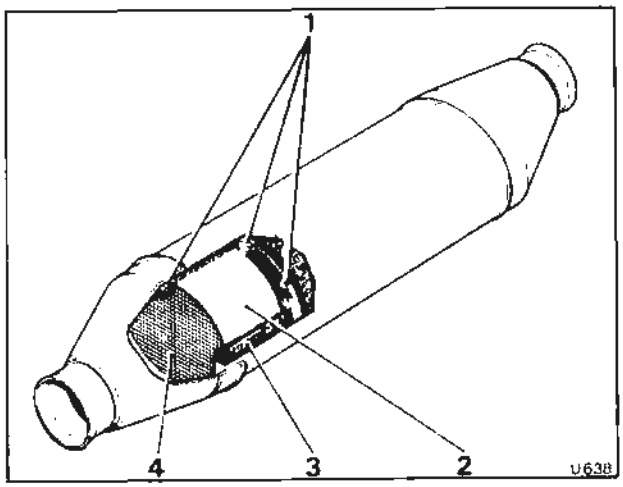

Fig. U71 Catalytic converter
1 Stainless steel mesh retaining rings
2 Fireclay coating
3 Stainless steel mesh
4 Monolithic catalyst (1 of 3 blocks)

Optimum conversion efficiency of the catalyst is achieved when a stoichiometric air/fuel ratio is presented to it. This condition is maintained by means of the 'closed loop' mixture control system.

Catalyic converter protection
To protect the catalytic converter from possible damage the following precautions should be taken.

Unleaded gasoline
Use unleaded gasoline only (91 RON Min.). The use of leaded gasoline will result in a substantial reduction in the performance of the catalyst. Under no circumstances add fuel system cleaning agents to the fuel tank for induction into the engine, as these materials may have a detrimental effect on the catalytic converter.

Engine malfunction
If the engine misfires or suffers from a lack of power which could be attributed to a malfunction of either the ignition or fuel systems, operations of the vehicle should be discontinued. Driving the vehicle with a malfunction in either of these systems could cause overheating and consequent damage to the catalytic converter.

Fuel
Do not allow the vehicle to run out of fuel. A warning lamp situated on the facia illuminates to warn the driver of a low fuel level in the fuel tank. If the vehicle does run out of fuel at a high speed, possible damage to the catalytic converter could result.

Starting the engine
The vehicle must not be pushed or towed to start the engine. Failure to observe this warning could cause overheating and consequent damage to the catalytic converter.

Engine temperature warning
If, whilst driving the warning panel marked 'COOLANT' illuminates and the warning buzzer sounds, stop the car as quickly as possible in a safe and orderly manner. The engine should not be operated under any circumstances and an authorised Dealer should be consulted. Continued operation of the vehicle with the engine temperature warning buzzer sounding could cause damage to the catalytic converter.

Exhaust emission control system
It is important to keep the vehicle in proper operating condition. Failure to do so will result not only in loss of fuel economy and emission control but could also cause damage to the catalytic converter due to overheating.

Catalytic converter - To remove and fit
1. Remove the screws retaining the grass-fire shield below the catalytic converter.

Note
Take care when removing the shield as the sharp edges could cause injury to the operator's hands.

2. Locate the exhaust pipe joint situated in front of the catalytic converter.

3. Slacken the three nuts around the joint.

4. Locate the exhaust pipe joint situated to the rear of the catalytic converter.

5. Slacken the two nuts retaining the clamp bracket.

6. Support the weight of the catalytic converter.

7. Unscrew and remove the nuts from both the front and rear joints, collect the washers and withdraw the bolts.

8. Withdraw the catalytic converter assembly and collect the sealing ring of each joint. The sealing rings are not interchangeable, therefore, they should be labelled for identification.

9. Fit the catalytic converter by reversing the removal procedure, noting the following points.

(a) The sealing rings and pipe flares must be thoroughly clean and free from scale. They may be lightly dressed with fine emery cloth if required.

(b) Apply 'Neverseez' anti-seize compound to the clamp bolt threads before assembly.

(c) The sealing rings, pipe flares and grooves in the spherical joint clamp bracket should be lightly smeared with either graphite lubricant or 'Neverseez' compound. This will assist alignment of the parts upon the assembly.

(d) The parts should be loosely assembled and then manoeuvred to give the best alignment, before the joints are tightened.

Do not allow the assembly compound to enter the exhaust system, particularly up stream (in front) of the catalytic converter, otherwise damage to the converter assembly will result.

Oxygen sensor
For details relating to the oxygen sensor refer to Section U2.

For information relating to the remainder of the exhaust system refer to Chapter Q, Exhaust system.

Printed in England
© Rolls-Royce Motors Limited 1980

Section U4

Fuel evaporative emission control system

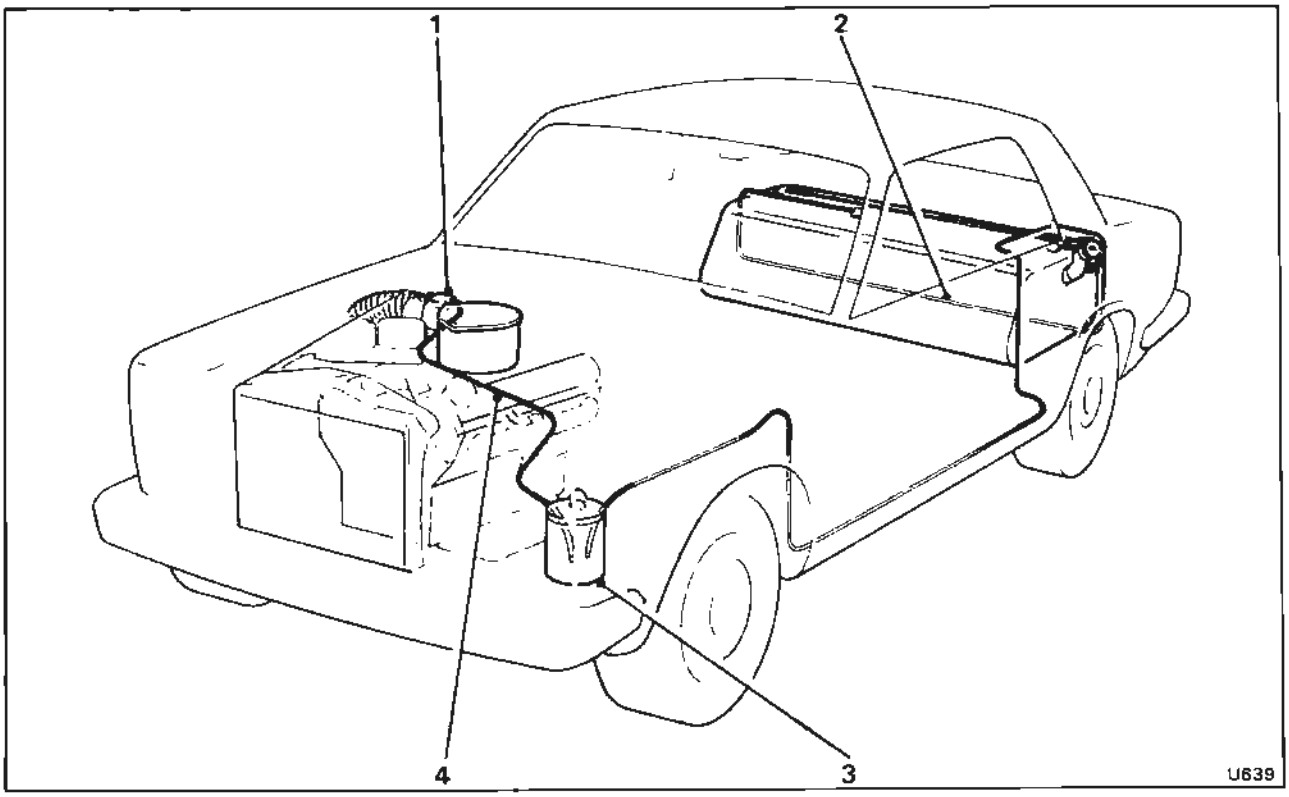

Fig. U72 Fuel evaporative emission control system
1 Throttle body gated purge orifice
2 Fuel tank rollover tubo
3 Canister
4 Purge line restrictor

The fuel evaporative emission control system eliminates direct venting of the fuel tank,thus preventing the release of hydrocarbons into the atmosphere (see Fig. U72).

Fuel vapours from the fuel tank are collected and stored in a charcoal filled canister situated under the left-hand front wing. This canister is purged whenever the engine is running and the stored fuel vapours are extracted from the charcoal and burnt in the engine.

The fuel tank is located at the forward end of the luggage compartment behind the carpet covered panel.

A combined pressure/vacuum relief valve is located in the fuel filler cap and a rollover tube is incorporated in the vent line from the fuel tank to the control canister, to prevent fuel from reaching the canister during harsh manoeuvres or in the event of vehicle inversion.

For details of the servicing and maintenance requirements of the fuel evaporative emission control system, refer to the Service Schedules Manual - T.S.D. 4117.

A more detailed description of the components used in this system is as follows.

Control canister (see Fig. U73)
The evaporative emission control canister is mounted under the left-hand wing. It is a cylindrical container filled with activated carbon granules.

The top of the canister incorporates a tube, open to atmosphere to admit purge intake air. In the base of the assembly is one connection for the fuel tank vent hose and another connection for the purge line. The carbon granules are retained within the canister by a system of baffles and screens as shown in Figure U73.

At the mileage specified in the Service Schedules remove the control canister and fit a new assembly.

Control canister - To remove and fit
1. Remove the front left-hand road wheel as described in Chapter R.

Printed in England
© Rolls-Royce Motors Limited 1980

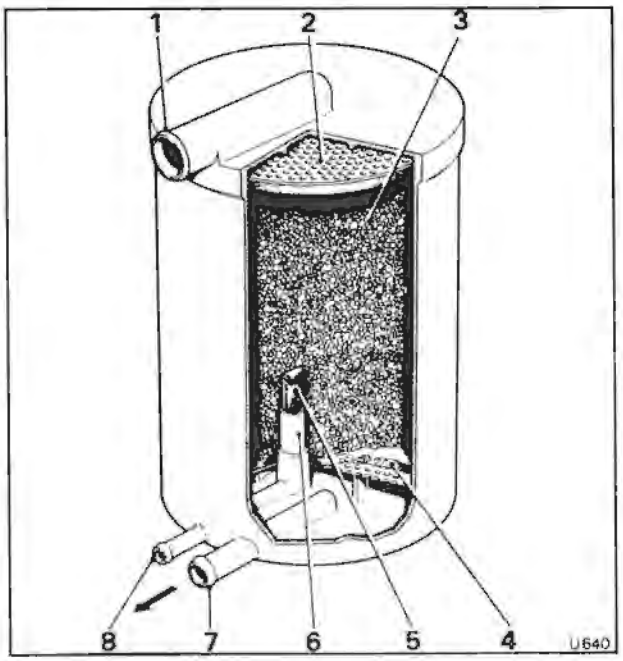

Fig. U73 Fuel evaporative loss control canister
1 Air intake
2 Baffle
3 Carbon granules
4 Baffle mat
5 Screen
6 Stand tube
7 Purge line connection
8 Fuel tank vent connection

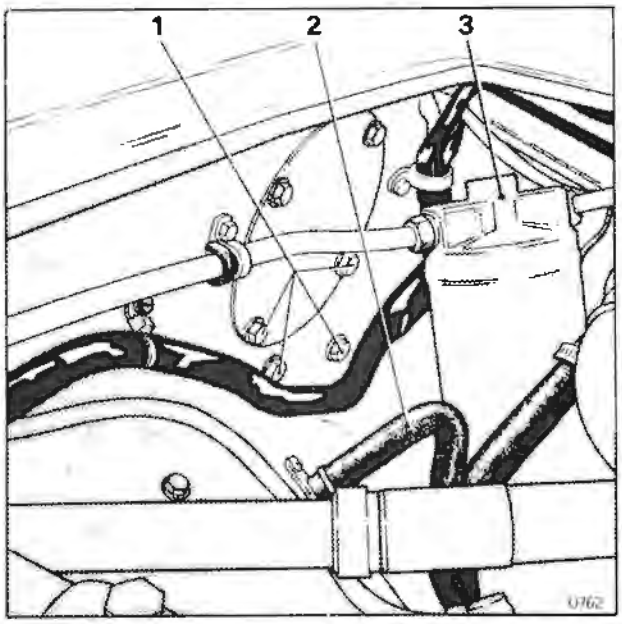

Fig. U74 Canister securing setscrews
1 Securing setscrews
2 Purge line
3 Receiver/Drier

Note
Left-hand is determined when viewed from the driver's seat.

2. Remove the front section of the underwing sheet by unscrewing the small screws situated around the outer edge of the sheet. Resistance may be experienced when the sheet is being freed, as it is sealed around the edge with Bostik Seelastic.

3. The canister will be clearly visible towards the front of the vehicle.

4. Using the special pliers (RH 8090), remove the steel retaining clips from the hose connections to the canister. Label the hoses to facilitate identification and withdraw the hoses from the canister.

5. Raise the bonnet and from inside the engine compartment unscrew and remove the four setscrews indicated as securing setscrews in Figure U74. Before removing the final setscrew support the control canister.

6. Carefully withdraw the canister from beneath the wing.

7. Fit the canister by reversing the procedure described for removal, noting the following points.

(a) Ensure that the rubber hoses are in good condition and new hose retaining clips are fitted.

(b) Ensure that the underwing sheet is sealed with Bostik Seelastic.

Fuel tank vent (see Fig. U52)
The fuel tank is vented via two connections to the filler neck, allowing adequate venting of the tank during filling.

A separate vapour line from the centre of the tank (the rollover tube) almost encircles the tank before passing to the evaporative loss control canister (see Fig. U72) under the floor of the car on the left-hand side. The vent line passes around the tank to prevent liquid fuel from entering the evaporative loss control canister during harsh manoeuvres or in the event of vehicle inversion.

In the event of a blockage in the vapour line to the evaporative loss control canister, a combined pressure and vacuum relief valve in the fuel filler cap, prevents an excessive pressure build-up in the fuel tank due to fuel vaporisation or vacuum as the fuel is consumed.

An expansion tank situated within the main fuel tank inhibits complete filling and provides fuel expansion volume to cope with extreme temperature conditions.

For all other details of the fuel tank refer to Section U2, Fuel injection system.

Fuel evaporative emission control system - To leak check
Whenever the various pipes, hoses and components of the fuel evaporative emission control system are disturbed, the system should be checked for air leaks upon assembly.

To test the system proceed as follows.

1. Position the vehicle on a ramp and carry out the usual safety precautions (i.e. ensure that the gear range selector lever is in 'Park' position, the parking brake firmly applied, the engine switched off, etc.). Raise the ramp.
2. Remove the left-hand horn assembly (left-hand is decided when standing under the vehicle, looking towards the front), see Chapter M.
3. Through the resultant gap between the front wing and wing sheet, locate the emission control canister and identify the hose connection from the fuel tank (see Fig. U72).
4. Using the special pliers (RH 8090), remove the steel retaining clip from the fuel tank connection hose at the control canister.
5. The fuel tank hose should be detached from the canister and connected to the test equipment (see Fig. U75).
6. Apply air pressure to the fuel tank hose via the test equipment until a reading of 38 cm. (15 in.) H_2O is attained and close the pressure supply.
7. After 5 minutes again check the pressure reading, this should not have fallen by more than 12,7 mm. (0.5 in.).
8. If the pressure drop is more than 12,7 mm. (0.5 in.), progressively treat all joints in the system with soap solution to detect air leaks.
9. Rectify any air leaks and again leak check the system.
10. When the system is satisfactory, detach the test equipment and connect the hose to the control canister, secure with a new steel retaining clip.
11. Fit the left-hand horn assembly as described in Chapter M.

Purge line (see Fig. U72)
The purge line connects the evaporative loss control canister to the engine induction system.

Air from the atmosphere is drawn down through the carbon granules in the control canister picking up the stored fuel vapours, the air then passes from a connection at the bottom of the canister, along a hose to a connection on the throttle body where the air is drawn into the induction system.

Purge line restrictor (see Figs. U65 and U72)
A purge line restrictor is situated in the purge line between the control canister and the throttle housing connection. The function of the resistor is to maintain the flow through the purge line within predetermined limits.

Purge line restrictor - To remove and fit (see Fig. U65)
1. Locate the joint in the purge line hose.
2. Hold the hose on one side of the joint and pull the other hose. This will reveal one end of the restrictor as the hose is detached.
3. Hold the restrictor and withdraw the second hose.
4. Fit the restrictor by reversing the procedure given for removal noting that it is fitted into the line the correct way around. This can be determined by comparing the diameters of the restrictor ends with those of the rubber hoses.

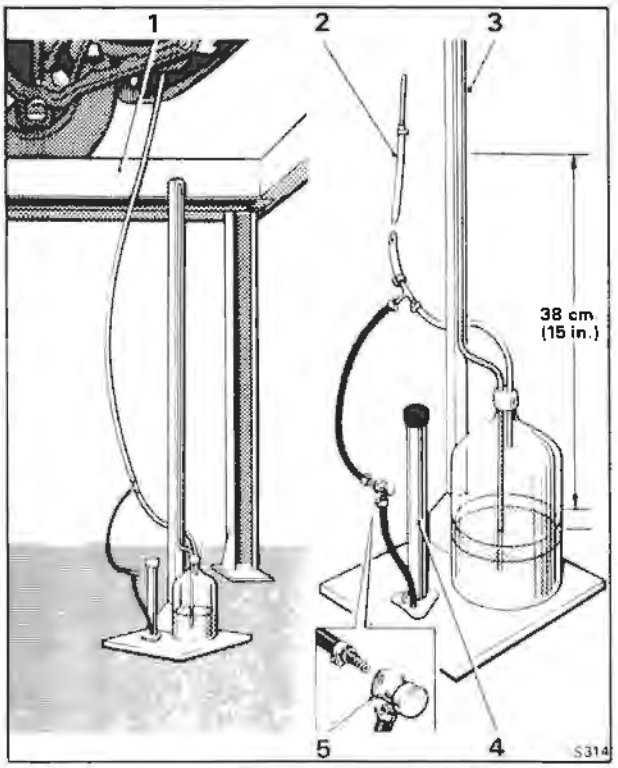

Fig. U75 Leak check test equipment
1 Ramp
2 Connection to fuel tank/canister hose
3 Test equipment
4 Pump
5 One way pressure valve

Purge flow rate - To check
1. Disconnect the hose at the purge line restrictor. Leave the restrictor in the hose to the engine.
2. Connect an impulse tachometer to the engine in accordance with the manufacturer's instructions.
3. Connect a rotameter assembly (RH 8725) into the line, between the restrictor and the open pipe to the valance connection.
4. Start the engine. Raise the engine speed to 2 500 r.p.m. and note the flow reading on the rotameter, this should be between 35 cu. ft/hr. and 55 cu. ft/hr.
5. **If the flow is less than 35 cu. ft/hr.**, this could be caused by:
(a) An air leak in the vacuum hose connecting the restrictor to the throttle body.
(b) A blockage in any of the hoses.
(c) Incorrect ignition timing.
(d) Incorrect drilling in the restrictor.
(e) Incorrect drilling in the throttle body.
6. **If the flow is more than 55 cu. ft/hr.**, this could be caused by:
(a) Incorrect ignition timing.
(b) Incorrect drilling in the restrictor.
(c) Incorrect drilling in the throttle body.

Printed in England
© Rolls-Royce Motors Limited 1980

7. Reduce the engine speed to the idle setting.
8. Stop the engine, remove the test equipment and connect the purge line hose.

Section U5

Crankcase emission control system

Crankcase emissions are controlled by two separate breather pipes.

From the rear of 'A' bank cylinder head a moulded rubber hose connects the crankcase to the air intake housing, immediately upstream of the air meter but downstream of the air cleaner/silencer assembly (see Fig. U76). At the cylinder head end of the breather tube, a flame trap containing three wire mesh discs is fitted into the connecting housing. This housing also incorporates a restriction drilling to control the flow.

At normal road loads (other than those that occur at high speed near full throttle) air flows into the crankcase via the connection at the rear of 'A' bank cylinder head. However, at road loads approaching high speed near full throttle the direction of flow is reversed due to the increasing depression created by the air cleaner/silencer and associated ducting.

From the front of 'B' bank cylinder head a second moulded rubber tube connects the crankcase via the oil filler (which has a sealed cap) to a pipe leading to the plenum chamber. This pipe assembly incorporates a restrictor to control the flow.

A flame trap containing three wire mesh discs is fitted in a housing at the crankcase end of the breather tube (see Fig. U77).

Under normal operating conditions the gas flow in the 'B' bank breather tube is from the crankcase to the plenum chamber. However, the gas flow in the 'A' bank breather tube may be in either direction depending upon the operating conditions.

For details of the servicing and maintenance requirements of the crankcase emission control system refer to the Service Schedules Manual -T.S.D. 4117.

Crankcase breather 'A' bank - To service

1. Locate the crankcase breather connection at the rear of 'A' bank cylinder head.

2. Slacken the worm drive clips securing the ends of the breather hose, free the joints and withdraw the hose.

3. Unscrew the three setscrews securing the breather take-off flange to the crankcase connection.

4. Withdraw the three setscrews and collect the washer fitted under the head of each one.

5. Lift the solenoid bracket from the vicinity of the connection.

6. Free the joint and lift the elbow casting from the engine. Discard the gasket.

7. Invert the casting and remove the circlip. Collect the retaining washer and withdraw the flame trap assembly.

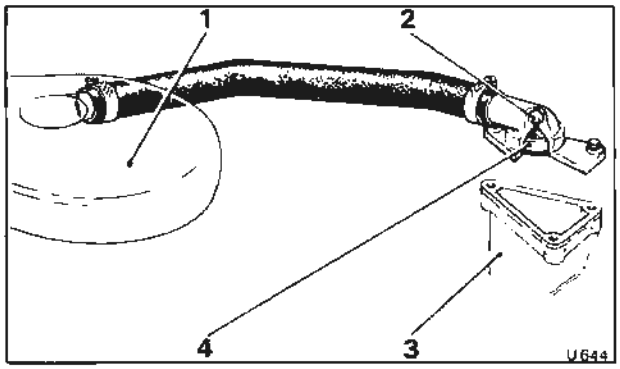

Fig. U76 Crankcase breather - 'A' bank
1 Air intake duct
2 Restriction drilling
3 Crankcase connection
4 Flame trap

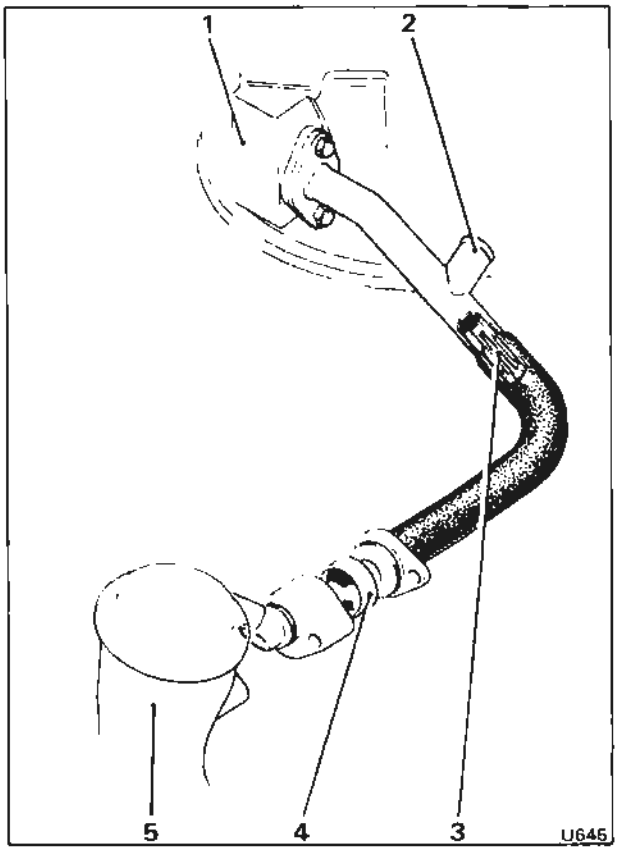

Fig. U77 Crankcase breather - 'B' bank
1 Plenum chamber
2 Auxiliary air valve connection
3 Restrictor
4 Flame trap
5 Oil filler

Printed in England
© Rolls-Royce Motors Limited 1980

8. Wash the flame trap in clean fuel and dry with compressed air.
9. Clean any deposits from inside the breather hose.
10. Fit the 'A' bank breather by reversing the procedure given for removal, noting that a new gasket should be fitted between the breather elbow casting and the engine.

Crankcase breather 'B' bank - To service
1. Slacken the worm drive clip securing the hose from the auxiliary air valve to the metal breather pipe. Withdraw the hose.
2. Slacken the worm drive clip securing each end of the rubber breather hose and free both hose joints.
3. Unscrew the two setscrews securing the metal breather pipe to the plenum chamber. Collect the washers, withdraw the pipe and discard the gasket.
4. Withdraw both the metal breather pipe and the rubber breather hose.
5. Unscrew the setscrew securing the adapter housing to the oil filler. Collect the washer and withdraw the housing. (slight resistance may be felt due to the rubber sealing ring).
6. Remove the flame trap assembly.
7. Wash the flame trap assembly in clean fuel and dry with compressed air.
8. Clean any deposit from inside the breather pipe and hose.
9. Inspect the inside of the metal pipe to ensure that the restrictor is not blocked.
10. Assemble the 'B' bank breather by reversing the removal procedure noting that a new gasket should be fitted between the metal pipe and the plenum chamber. Ensure that the rubber 'O' ring on the oil filler connection is in good condition.

When fitting the flame trap assemblies, the longer assembly should be fitted to the 'B' bank oil filler connection.

Section U6

Ignition system

Data

Ignition timing 3°B.T.D.C. (initial static setting)
14°- 16°B.T.D.C. at 1 450 r.p.m.
(approach 1 450 r.p.m. from a higher speed).

Ignition control system

The ignition system utilises an Opus distributor (in which a magnetic pick-up and control unit replace the conventional contact breaker), a high load ignition coil and a ballast resistor.

A drum with eight ferrite rods (one per cylinder) moulded into the outer edge is mounted onto the distributor drive-shaft. As the drum rotates a voltage is created each time a ferrite rod passes the magnetic pick-up. The signal is then amplified and used to switch off the normally conducting power transistor in the primary coil circuit of the ignition coil, thus inducing a high voltage in the secondary winding which is distributed to the sparking plugs in the normal manner.

This ignition control system provides increased accuracy of timing and increased service life before maintenance is required.

The distributor has a conventional centrifugal advance mechanism.

In addition, the ignition control system employs a vacuum advance/retard capsule.

Vacuum ignition advance is applied continuously to the capsule for part throttle economy during open road cruising.

Vacuum ignition retard is used during engine warm-up to accelerate catalyst and oxygen sensor warm-up.

The vacuum retard signal is cut off by a solenoid valve, if the oil temperature is below 17°C. (63°F.) or the coolant temperature is above 55°C. (131°F.)

For the removal and fitting instructions of the ignition system components refer to Chapter M.

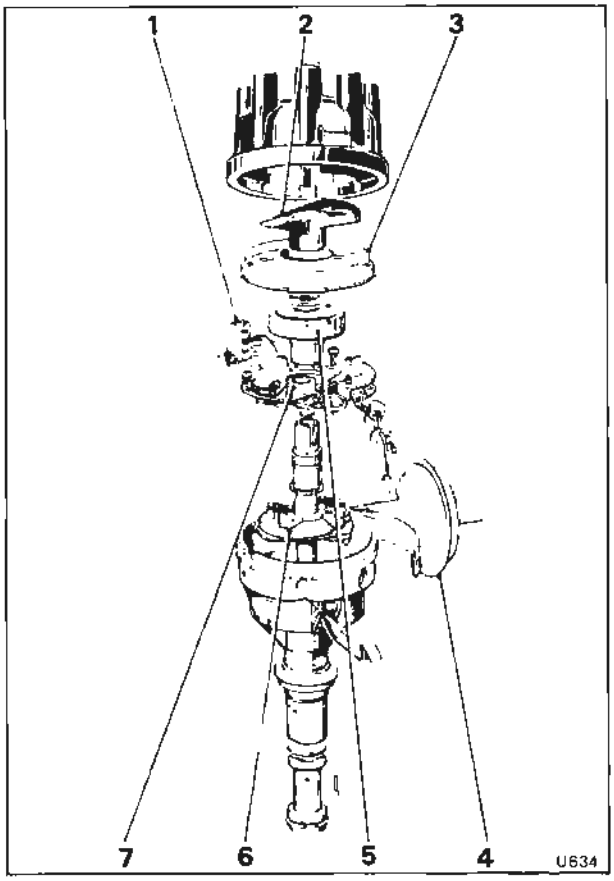

Fig. U78 Ignition distributor

1 Magnetic pick-up
2 Rotor arm
3 Dust cover
4 Vacuum advance/retard capsule
5 Rotating drum
6 Centrifugal advance mechanism
7 Electronic module assembly

Ignition - To time (using a stroboscope)

Ignition timing is carried out on A1 cylinder and should be 15°B.T.D.C. at 1 450 r.p.m.; A1 cylinder is the front cylinder on the right-hand side of the engine when viewed from the driver's seat.

At the service intervals specified in the Service Schedules, the ignition timing should be checked as follows and adjusted if necessary.

Important

If the ignition timing is to be set, ensure that the sparking plugs are in a good condition before running the engine; if they require cleaning or renewal, the sparking plug gaps should be set to 0,9 mm. (0.035 in.).

1. To check the ignition timing commence by running the engine until normal operating temperature is attained. Switch off the engine.
2. Connect a stroboscope and a tachometer to the engine as described in the instructions supplied with respective equipment.

On no account must the stroboscope timing lamp positive feed be connected to the ignition coil. The positive feed should be taken from a known 12 volt connection.

Printed in England
© Rolls-Royce Motors Limited 1981
August 1981
TSD 4200
(California
1980 Model Year)

3. Disconnect the vacuum hose from the distributor side of the vacuum retard solenoid and fit a blank to the solenoid valve connection.
4. Disconnect the vacuum advance hose from on top of the throttle housing connection and blank off the throttle housing connection.
5. Start and run the engine at a speed of 1 450 r.p.m. When setting the engine speed reduce from a higher speed to 1 450 r.p.m.
6. Direct the flashing light of the stroboscope onto the crankshaft damper timing marks and timing pointer; the pointer is positioned on the left-hand side of the crankshaft damper when viewed from the driver's seat.
7. If the timing pointer does not coincide with the 15°B.T.D.C. mark on the crankshaft damper adjust the ignition timing as follows.

Release the clamp screw on the distributor and rotate the head of the distributor in the appropriate direction until the correct timing is obtained. Clockwise rotation of the distributor head advances the ignition and conversely anti-clockwise rotation retards the ignition.

8. Tighten the clamp screw and check that the ignition timing is between 14°and 16°B.T.D.C. at 1 450 r.p.m. (again reduce from a higher speed to 1 450 r.p.m.).
9. Connect the overrun valve vacuum signal hose to the vacuum retard capsule hose using an additional piece of hose.
10. Start the engine and set the speed at 1 450 r.p.m. (reduce the speed to 1 450 r.p.m.).
11. Check that the ignition timing has retarded between 10°and 14°from the setting in Operation 8.
12. Allow the engine to return to the idle speed and set this to 650 r.p.m. using the idle speed adjustment screw on top of the throttle body.
13. Direct the timing light onto the timing marks on the crankshaft damper. The timing should now be between T.D.C. and 8°B.T.D.C.
14. Stop the engine and connect the vacuum signal hose (refer to Operation 9) to the overrun valve.
15. Connect a vacuum pump to the distributor vacuum advance hose. Apply an initial vacuum of 63,5 cm. Hg. (25 in.Hg) and then reduce the vacuum to 50,8 cm.Hg. (20 in.Hg) and maintain it. Start the engine and adjust the idle speed to 650 r.p.m.
16. Check that the ignition timing has advanced by between 10°and 14°from that measured in Operation 13.
17. Stop the engine, remove the test equipment and reconnect all hoses in their correct positions.

If the ignition timing is outside the ranges quoted, the distributor is faulty and a new unit should be fitted.

Setting the engine idle speed
To finally set the engine speed after carrying out the ignition timing sequence, refer to Idle speed - To set, in Section U2.

Distributor maintenance
The distributor requires no routine maintenance except that, at the mileage intervals specified in the Service Schedules the moulded cover and H.T. rotor arm should be removed and the spindle shaft bearings lubricated by inserting a few drops of engine oil onto the felt pad. The automatic advance mechanism should also be lubricated at this time with a few drops of engine oil inserted through apertures in the base plate.

Sparking plugs
The sparking plugs approved for this car are Champion RN 14 Y. Before fitting the plugs, set the gaps with the aid of a feeler gauge to 0,9 mm. (0.035 in.) and lightly smear the threads with 'Graphogen' grease.

Section U7

Electrical components

Printed in England

© Rolls-Royce Motors Limited 1980

January 1980

TSD 4200
(California
1980 Model year)

The electrical components described in this chapter would normally appear in Chapter M - Electrical system, however, as they are used in connection with the emission control system it is thought more practical to include the information within this chapter.

The components concerned are as follows.

Included in this section
Exhaust gas recirculation (E.G.R.) cut-off solenoid.
Ignition distributor vacuum retard cut-off solenoid and cut-out relay.
Coolant temperature switch (vacuum retard).
Coolant temperature switch (E.G.R. cut-out).
Engine oil temperature switch (vacuum retard).
Elapsed mileage indicator.

Included in Section U2, Fuel injection system
Auxiliary air valve.
Cold start injector and thermal time switch.
Electronic control unit.
Engine running sensor.
Oxygen sensor and warning lamp.
Pressure control valve.
Warm-up regulator.
'Wide open' throttle micro-switch.

A theoretical wiring diagram containing details of the electrical components used in the K-Jetronic fuel injection system, is shown in Section U2, Figure U28.

E.G.R. cut-off solenoid
The E.G.R. cut-off solenoid is located adjacent to the ignition distributor just below the ignition vacuum retard cut-off solenoid (see Fig. U3). The operation of the solenoid valve is described on Page U2-19.

E.G.R. cut-off solenoid - To remove and fit
1. Detach the electrical connections, noting the positions of the connections to facilitate assembly.
2. Detach the rubber hose from both sides of the solenoid.
3. Unscrew the two screws securing the solenoid in position and withdraw the valve.
4. Fit the solenoid by reversing the removal procedure.

E.G.R. cut-off solenoid - To check
1. Withdraw the E.G.R. valve signal from the throttle body (see Fig. U13) and the hose from the E.G.R. valve.
2. Ensure that the end of the hose removed from the throttle body is clean and blow down the hose. The solenoid valve should be open, allowing the air to pass and come out of the hose removed from the E.G.R. valve.
3. Switch on the ignition.
4. With an engine coolant temperature below 30°C. (86°F.), the solenoid valve will be energised to cut-off the feed to the E.G.R. valve, therefore, it should not be possible to blow down the hose.
5. Start and run the engine. Once the coolant temperature is above 39°C. (86°F.) the solenoid valve will be de-energised and therefore, it should be possible to blow down the hose.
6. Operate the 'wide open' throttle micro-switch. The solenoid valve will be energised and it should not be possible to blow down the hose.
7. Stop the engine.
8. If the solenoid valve operates as described in Operations 2 to 6 inclusive, fit the vacuum hoses as the solenoid is operating satisfactorily.
9. If the solenoid valve does not operate satisfactorily proceed as follows.

E.G.R. cut-off solenoid circuit wiring - To check
1. Connect a test lamp across the two 'Lucar' connections to the solenoid valve. **Do not disconnect the two connections.**
2. Ensure that the engine is cold.
3. Switch on the ignition and start the engine noting that the bulb of the test lamp is illuminated.
4. Continue to run the engine, noting that as the engine warms-up [the coolant temperature reaches approximately 30°C. (86°F.)] the test lamp bulb should extinguish.
5. Operate the 'wide open' throttle micro-switch noting that as the contacts make (click) the test lamp bulb again illuminates.
6. If the bulb of the test lamp operates as described the wiring is correct.
7. If the bulb of the test lamp does not operate as described,

(a) Check the operation of the E.G.R. cut-out thermal switch, situated in the thermostat housing (see Fig. U79) using the test lamp.
(b) Check the operation of the 'wide open' throttle micro-switch.

Ignition distributor vacuum retard cut-off solenoid and cut-out relay
The vacuum retard cut-off solenoid is situated adjacent to the ignition distributor above the E.G.R. cut-off solenoid (see Fig. U3).
The cut-out relay (fuel injection system relay) is

located with two other relays adjacent to the transmission dipstick, it is the relay shown nearest to the wing (bottom of the illustration) in Figure U49.

Ignition distributor vacuum retard cut-off solenoid - To remove and fit

1. Detach the electrical connections noting the positions of the connections to facilitate assembly.
2. Detach the rubber hose from both sides of the solenoid.
3. Unscrew the two screws securing the solenoid to the mounting bracket. Withdraw the solenoid valve.
4. Fit the solenoid by reversing the removal procedure.

Ignition distributor vacuum retard cut-off solenoid - To check

1. Withdraw the two hoses from the solenoid valve. Fit an auxiliary hose to the plenum chamber side of the solenoid valve.
2. Ensure that the end of the hose is clean.
3. The solenoid valve should be closed therefore, it should not be possible to blow down the hose.
4. Ensure that the engine is cold [oil temperature below 17°C. (63°F.)]. If this temperature cannot be achieved, remove the oil temperature electrical connector and bridge the terminals in the loom plug.
5. Switch on the ignition, noting that it should not be possible to blow down the hose.
6. Start and run the engine. When the engine oil temperature reaches 17°C. (63°F.) the contacts in the oil temperature switch situated in the oil filter elbow (see Fig. U79) will 'break' and de-energise the cut-out relay (see Fig. U28). This will allow the solenoid to become energised via the coolant temperature switch. It should be possible to blow down the hose and through the solenoid.
7. As the engine coolant temperature rises above 55°C. (131°F.) the contacts of the coolant temperature switch situated in the thermostat housing (see Fig. U79) will 'break' and de-energise the solenoid. It should not be possible to blow down the hose.
8. Stop the engine.
9. If the solenoid valve operates as described in Operations 3 to 7 inclusive, fit the vacuum hoses as the solenoid is operating satisfactorily.
10. If the solenoid valve does not operate satisfactorily, carry out a test to ensure the solenoid valve operates when 12 volts are applied and afterwards proceed as follows.

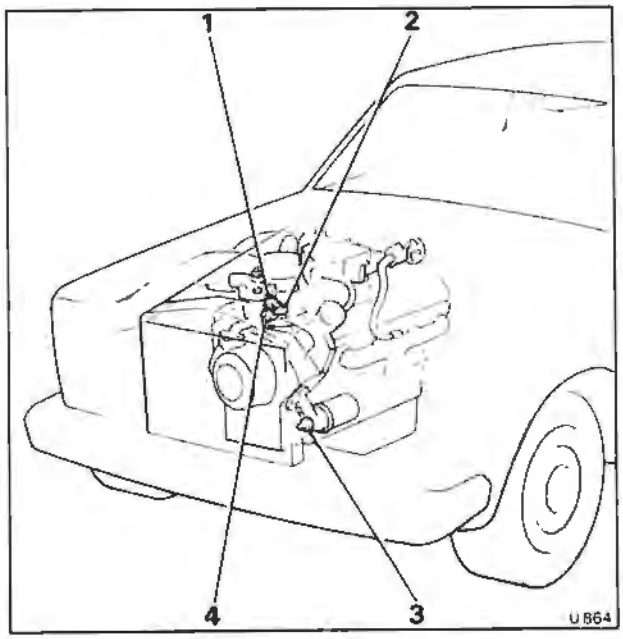

Fig. U79 Thermal switches
1 E.G.R. cut-out switch
2 Cold start injector switch
3 Ignition vacuum retard switch (oil)
4 Ignition vacuum retard switch (coolant)

Ignition distributor vacuum retard cut-off solenoid circuit wiring - To check

These tests will also check the operation of the cut-out relay and the oil and coolant temperature switches associated with the circuit.

1. Locate the cut-out relay (fuel injection system relay) that is located with two other relays adjacent to the transmission dipstick, the relay is shown nearest to the wing (bottom of the illustration) in Figure U49.
2. Detach the white/orange cable from the relay and connect a test lamp between the cable and the relay (see Fig. U28).
3. Ensure that the engine is cold [oil temperature below 17°C. (63°F.)] and switch on the ignition.
4. The bulb of the test lamp should not be illuminated. If the bulb is illuminated the operation of either the relay or oil temperature switch is suspect.
5. Start and run the engine, as the engine oil temperature exceeds 17°C. (63°F.) the test lamp bulb should illuminate, showing that the contacts in the switch have opened and de-energised the relay, to allow the solenoid valve to be energised via the coolant temperature switch.
6. As the engine temperature rises above 55°C. (131°F.) the bulb of the test lamp should be extinguished as the contacts within the coolant switch open. If the bulb does not extinguish the operation of the coolant temperature switch is suspect.

From the evidence gained through carrying out these tests, the cause of a fault can be isolated so that a relatively straightforward test can be used to confirm a diagnosis.

Ignition vacuum retard thermal switches - To test

1. Produce a test lead comprising a plug (to fit the thermal switch) and two short lengths of cable.
2. Connect the test lead to the switch and one of the cables to a known good 12 volt supply via the

test lamp. The other cable should be connected to a good earth.
3. Ensure that the engine is cold [i.e. engine oil temperature below 17°C. (63°F.)].
4. Switch on the ignition, noting that the test lamp bulb is illuminated.
5. Start and run the engine, as the engine oil temperature exceeds 17°C. (63°F.) the test lamp bulb will be extinguished.
6. Stop the engine, remove the test equipment and connect the plug to the switch socket.
7. Remove the plug from the coolant temperature switch (see Fig. U79) and repeat Operation 2.
8. Switch on the ignition noting that the test lamp is illuminated.
9. Start and run the engine, as the engine coolant temperature exceeds 55°C. (131°F.) the test lamp bulb will be extinguished.
10. Stop the engine, remove the test equipment and connect the plug to the switch socket.

Ignition vacuum retard cut-out relay - To test
1. Locate the cut-out relay (fuel injection relay) that is located with two other relays adjacent to the transmission dipstick, the relay is shown nearest to the wing (bottom of the illustration) in Figure U49.
2. Label the cables to facilitate assembly and withdraw them from the relay (except the white cable).
3. Fit a known 12 volt supply to the terminal from which the white/purple cable was removed.
4. Fit a test lamp between the terminal from which the white/orange cable has been removed and earth.
5. Switch on the ignition, noting that the bulb of the test lamp is illuminated.
6. Earth the terminal from which the brown/yellow cable has been removed, noting that each time the terminal is earthed the test lamp bulb illuminates.
7. Fit a new relay if necessary.

Ignition vacuum retard wiring
If all components within the vacuum retard inhibit system are serviceable,check for continuity of the cables, refer to Figure U28.

Elapsed mileage indicator
The operation of the elapsed mileage indicator is described on Page U2-21. The unit is situated behind the side panel carpet on the right-hand side of the luggage compartment (see Fig. U80).

At the mileage specified in the Service Schedules, a new oxygen sensor should be fitted and at this time the elapsed mileage indicator should be reset as follows.
1. Open the luggage compartment.
2. Remove the tools from the right-hand side of the luggage compartment.
3. Release the 'Tenax' clip situated adjacent to the rear lamps access point.
4. Unscrew the 'Pozidriv' screws securing the side panel carpet in position. Unscrew sufficient screws to allow the rear of the carpet panel to be moved

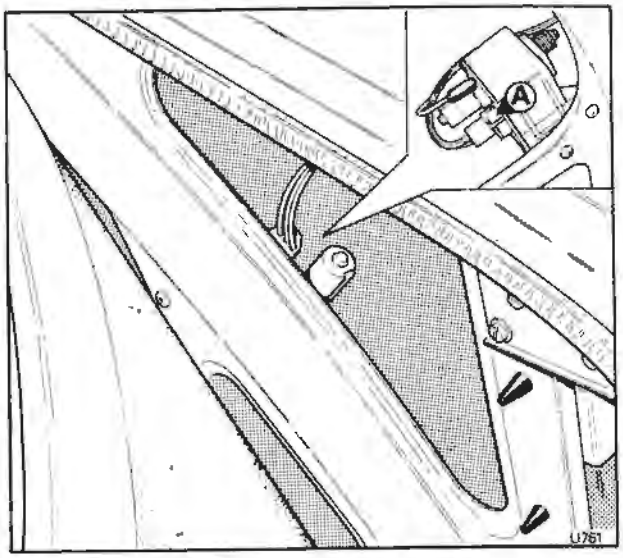

Fig. U80 Elapsed mileage indicator
A Reset button

inwards to reveal the elapsed mileage indicator.
5. Refer to Figure U80 and locate the reset button.
6. Firmly depress the reset button.
7. Switch on the ignition.
8. Start and run the engine, noting that as the oxygen sensor reaches its normal operating temperature the warning lamp on the facia is extinguished.
9. Stop the engine and fit the carpet panel.

Printed in England
© Rolls-Royce Motors Limited 1980

Section U8

Throttle linkage

Throttle linkage - To assembly and set (see Fig. U81 Page U8-2)

1. Set the accelerator pedal off - stop screw (item 16) to give a dimension of between 3,27 cm. and 3,32 cm. (1.29 in. and 1.31 in.) from the top of the boss on the lever to the top of the adjustment screw. Tighten the lock-nut.

2. Build a sub-assembly of the accelerator pedal lever (item 17), the pivot bolt and mounting brackets (item 18). Check that the lever moves freely between the brackets.

3. Fit the accelerator pedal lever assembly to the body and check that the lever moves freely.

4. Fit the accelerator cross-shaft (item 21) and fit the cross-shaft mounting brackets (item 12) to the body longerons.

5. Adjust the cross-shaft end-float to between 0,127 mm. and 0,381 mm. (0.005 in. and 0.015 in.) by bending the brackets.

6. Check that the cross-shaft (item 21) rotates freely.

7. Using the rod (item 19) connect the pedal lever (item 17) to the cross-shaft (item 21). Use the lower of the three holes. Lock the rod with split pins and check that the rod moves freely.

8. Fit the accelerator pedal to the lever (item 17).

9. Fit the spring anchor bracket (item 22) to the upper rear engine mount belt.

10. Fit the two pedal return springs (items 11 and 20) using the spring hooks.

11. Check that the brake pedal is correctly set (the accelerator pedal is set relative to the brake pedal).

Ensure that there is a minimum clearance of 9.94 cm. (3.915 in.) between the seal housing and the underside of the brake pedal.

Note

Full instructions for setting the brake pedal are given in Chapter G - Hydraulic systems.

12. Check that the accelerator pedal lies between 14,27 mm. and 20,62 mm. (0.562 in. and 0.812 in.) below the brake pedal. If not, reset the off-stop screw (item 16).

13. Set the manifold levers to an angle of between 90°and 94°as shown in inset A and lock the levers to the manifold shaft.

14. Using the drive links (item 5), connect the manifold lever to the throttle lever (item 4) using the pins, washers and split pins.

15. Fit the throttle return spring (item 2) using the spring hooks.

16. Assemble the isolator mechanism and connect the trapeze assembly to the yoke of the bracket (item 7).

17. Fit the isolator lever (item 6) to the manifold lever rod. Adjust the length of the rod to a dimension of between 15,14 cm. and 15,21 cm. (5.960 in. and 5.990 in.) between the inner faces of the lock-nuts.

Tighten the lock-nuts.

18. Check that the mechanism moves freely by pressing downwards on the end of the lever (item 6).

19. Assemble the long rod (item 8) and adjust the rod to a preliminary length of between 51,99 cm. and 52,07 cm. (20.47 in. and 20.50 in.) between the inner faces of the lock-nuts.

20. Fit the jaw (item 14) of the long rod to the control operating lever (item 15).

21. Offer up the yoke of the ball joint on the top end of the long rod to the ball on the isolator lever (item 6).

22. Adjust the length of the long rod (item 8) until there is a minimum amount of free-play in the control system.

23. Tighten the lock-nuts.

24. Check that the entire accelerator control system operates smoothly.

25. Ensure that the kickdown micro-switch and operating plunger are correctly adjusted (refer to Chapter K, Section K5).

26. Check that the throttles close fully when the accelerator pedal is released.

27. With the engine at normal operating temperature but not running, repeat Operations 24 and 26.

Printed in England

© Rolls-Royce Motors Limited 1980

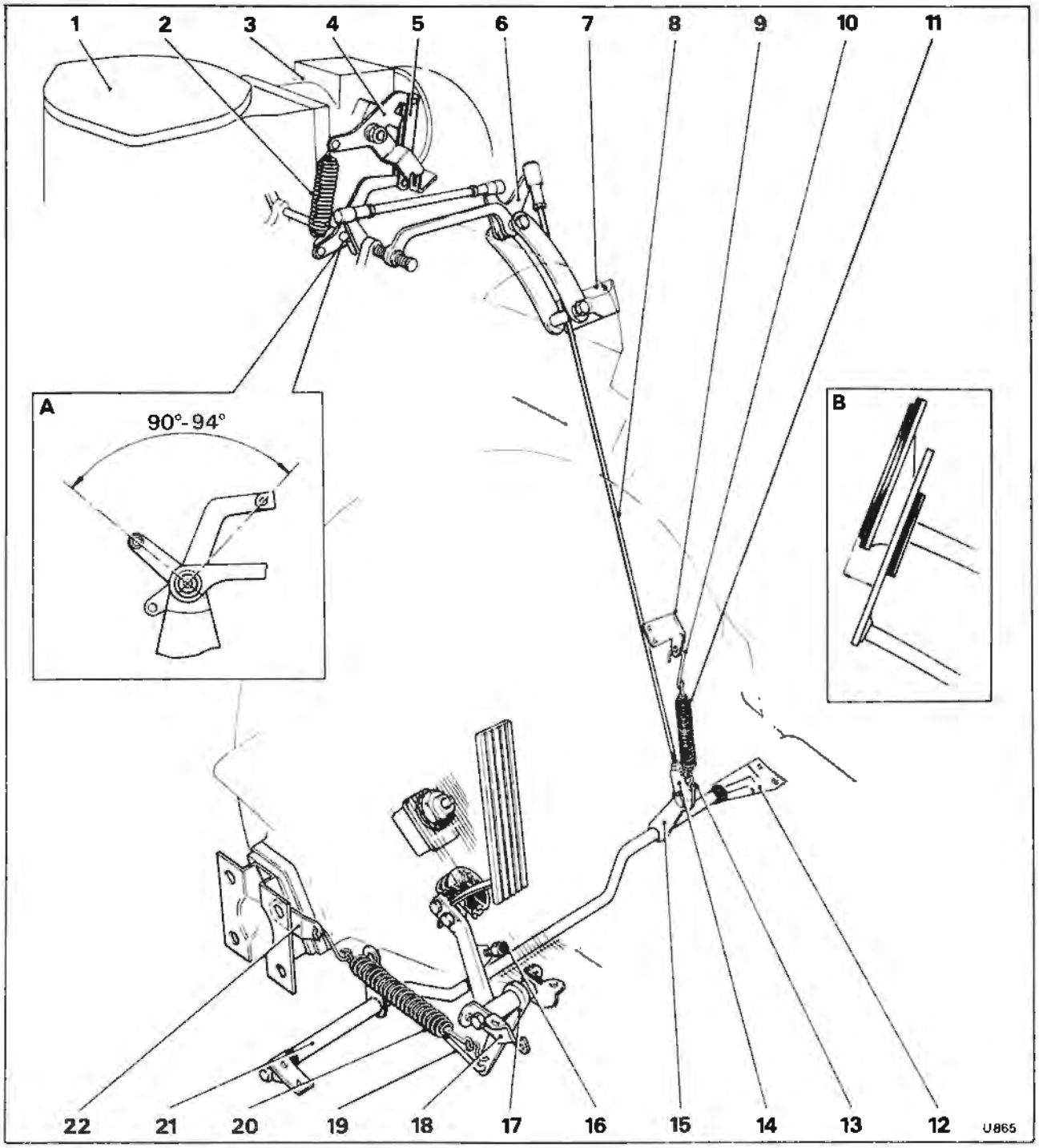

Fig. U81 Throttle linkage

1 Plenum chamber cover
2 Throttle return spring
3 Throttle body
4 Throttle lever
5 Drive links
6 Isolator lever
7 Body longeron bracket
8 Long rod
9 Lower return spring bracket
10 Spring hook (upper)
11 Lower return spring
12 Cross-shaft mounting bracket
13 Spring hook (lower)
14 Jaw - long rod
15 Control operating lever
16 Pedal off-stop screw
17 Pedal lever
18 Pedal lever mounting bracket
19 Connecting rod
20 Pedal return spring
21 Cross-shaft
22 Spring anchor bracket

Section U9

Workshop Tools

Tool Number	Description
RH 8090	Pliers (hose clips)
RH 8725	Flowmeter (rotameter type)
RH 9607	Adapter (for use with RH 9612)
RH 9608	Mixture adjusting tool
RH 9609	Guide ring (Air flow sensor plate)
RH 9611	Exhaust gas sampling adapter
RH 9612	Pressure tester (requires RH 9607)
RH 9613	Fuel delivery quantity comparison tester
RH 9614	Injector test equipment
RH 9615	'Closed loop' system tester

Printed in England
© Rolls-Royce Motors Limited 1980
January 1980
TSD 4200
(California
1980 Model year)

Section U10

Running Changes

Printed in England

© Rolls-Royce Motors Limited 1980

January 1980

TSD 4200
(California
1980 Model year)

Chapter U

Emission control systems

Applicable to all Corniche and Camargue 1981/82/83 model year cars produced to the Australian, Japanese and North American specifications

For all service details applicable to the above cars, refer to the appropriate section of TSD 4400, Chapter U.

Printed in England

© Rolls-Royce Motors Limited 1983

December 1982

TSD 4200

Chapter U

Supplement number 1
Emission control systems

Applicable to 1977-1980 (inclusive) model year cars destined for USA and Canada

Provision of altitude performance adjustments

Printed in England

© Rolls-Royce Motors Limited 1981

October 1981

TSD 4200

Chapter U

Supplements
Issue record sheet 1

October 1981

The dates quoted below refer to the issue date of individual pages within this chapter.

Section	Supp 1
Page No.	
1	Oct 81
2	Oct 81
3	
4	
5	
6	
7	
8	
9	
10	
11	
12	
13	
14	
15	
16	
17	
18	
19	
20	
21	
22	
23	
24	
25	
26	
27	
28	
29	
30	
31	
32	
33	
34	
35	
36	
37	
38	
39	
40	
41	
42	
43	
44	
45	
46	
47	
48	

Printed in England

© Rolls-Royce Motors Limited 1981

Printed in England
© Rolls-Royce Motors Limited 1981

Supplement number 1
Emission control systems
Provision of altitude performance adjustments

Regulations concerning the provision of altitude performance adjustments, applying to all 'model years' from 1968 to 1981 inclusive, necessitate the fitting of new needles to the carburetters to improve the exhaust emissions.

These adjustments concern vehicles being operated at altitudes other than that for which the vehicle was originally certified.

High Altitude Areas are defined in the Federal Register - Volume 41 - Number 46 - Dated Monday, March 8th 1976 - as a County or Counties in the U.S.A. wholly located above 1 219 metres (4 000 feet).

These altitude performance adjustment instructions are applicable to all Rolls-Royce and Bentley vehicles manufactured for initial sale in North America (1977-1980 'model years' inclusive).

The following is a list of the kits available, applicable to the appropriate model year(s).



Fig. U1 Vehicle Emission Control Information Update label - Low to High altitude change

Low to High altitude change

Kit Number	Model Year
RH 2824	1977-1980 (inclusive)

High to Low altitude change

Kit Number	Model Year
RH 2825	1977-1979 (inclusive)

The kits consist of a pair of needles and an 'Update' label.

After the new needles have been fitted, the idle CO (carburetter mixture strength) will have to be checked and reset if necessary. Reference should be made to the appropriate 'model year' of Chapter U, for the relevant settings.

When the above work has been carried out, the Vehicle Emission Control Information Update label supplied with the kit, should be fitted under the bonnet **alongside** the existing emission control certification label, but must not be fitted to any part that can be easily detached from the vehicle.



Fig. U2 Vehicle Emission Control Information Update label - High to Low altitude change

Needles - To remove

1. Thoroughly clean the outside of the carburetter.
2. Mark the suction chamber and carburetter body with a pencil, to aid reassembly.
3. Unscrew the suction chamber retaining screws and remove the identity tag.
4. Lift the suction chamber assembly vertically from the body without tilting it.

5. Early HIF 7 carburetters

Hold the piston firmly and pull the suction chamber, taking care not to bend the damper rod, until the damper retainer is freed from the piston rod. Unscrew and remove the damper.

Late HIF 7 carburetters

Unscrew and remove the damper rod, taking care not to bend the rod as it is withdrawn.

Push the piston to its highest point in the suction chamber and carefully prise the circlip from around the top of the piston rod.

Withdraw the suction chamber from the piston in an upwards direction.

6. Remove the piston spring, lift out the piston assembly and empty the oil from the piston rod.

7. Note the postion of the needle guide etch mark in relation to the piston transfer holes for correct reassembly and unscrew the needle guide locking screw.

Withdraw the needle, guide and spring.

Needles - To fit

1. Fit the spring onto the needle collar, ensuring that the spring locates in the groove.

2. Fit the guide onto the needle so that the end with the alignment mark is away from the collar.

3. Fit the needle assembly and guide into the piston. The lower face of the guide must be flush with the face of the piston, and the mark on the guide must be midway between the two cut-outs in the piston (see Fig. U3).

4. Fit and tighten the guide locking screw in the piston.

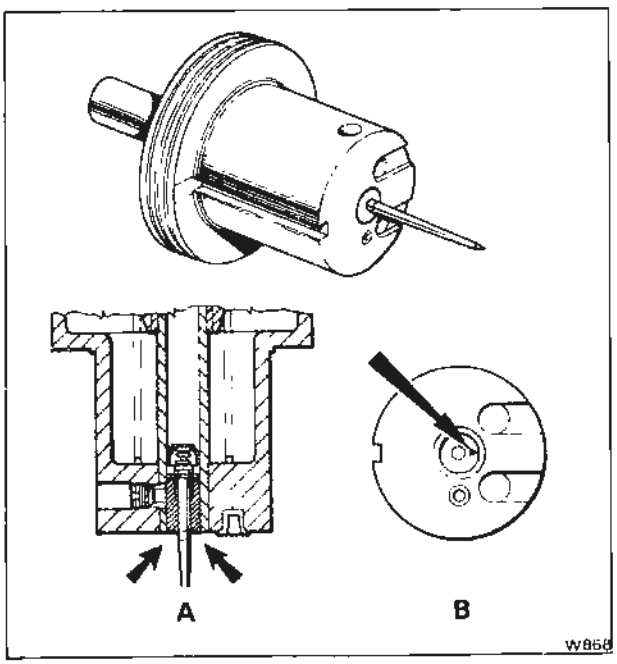

Fig. U3 Spring loaded jet needle
A Needle guide height setting
B Needle guide alignment setting

5. Fit the piston assembly to the carburetter body, carefully guiding the needle into the jet.

6. Fit the piston spring over the piston rod.

7. Fit the suction chamber, taking care not to 'wind up' the piston spring. Fit and tighten the suction chamber retaining screws, together with the identity tag.

8. Ensure the upper portion of the piston rod in each carburetter is filled with the same type of oil as used in the engine. The correct level is approximately 13 mm. (0,50 in.) from the top of the tube.

9. Fit the piston damper, ensuring that the damper retainer is secure in the piston rod (if fitted). Alternatively, raise the piston to its highest point in the chamber, so that the piston rod protrudes out of the suction chamber neck. Fit the circlip to the piston rod.

Carburetter tuning

For the tuning and setting of the idle CO, reference should be made to the relevant 'model year' of Chapter U.

Carburetter tamperproofing

If during the tuning of the carburetter it is necessary to adjust the idle CO setting, then retamperproofing of the carburetter adjusters will be necessary.

Chapter V

Wiring diagrams

Rolls-Royce Camargue
Rolls-Royce Silver Shadow II
Rolls-Royce Silver Wraith II
Bentley T2
Corniche Saloon
Corniche Convertible

© Rolls-Royce Motors Limited 1978

Printed in England
December 1978
T.S.D. 4200

T 675

Printed in England

© Rolls-Royce Motors Limited 1980

T.S.D. 4200

Chapter V

Issue record sheet 1

June 1980

The dates quoted below refer to the issue date of individual pages within this chapter.

Section	V1			V1 Supp. No.1			
Page No.		**Diagrams Sheet No.**		**Page No.**		**Diagrams Sheet No.**	
1	June 80	1	Feb 77	1	May 80	1	May 80
2	June 80	2	Feb 77	2		2	Dec 78
3	Dec 78	3	Feb 77	3		3	Dec 78
4		4	Feb 77	4		4	Dec 78
5		5	Feb 77	5		5	
6		6	Feb 77	6		6	
7		7	Feb 77	7		7	
8		8	Feb 77	8		8	
9		9	Feb 77	9		9	
10		10	Feb 77	10		10	
11		11	Feb 77	11		11	
12		12	Dec 78	12		12	
13		13	Dec 78	13		13	
14		14	Dec 78	14		14	
15		15	June 80	15		15	
16		16		16		16	
17		17		17		17	
18		18		18		18	
19		19		19		19	
20		20		20		20	
21		21		21		21	
22		22		22		22	
23		23		23		23	
24		24		24		24	
25		25		25		25	
26		26		26		26	
27		27		27		27	
28		28		28		28	
29		29		29		29	
30		30		30		30	
31		31		31		31	
32		32		32		32	
33		33		33		33	
34		34		34		34	
35		35		35		35	
36		36		36		36	
37		37		37		37	
38		38		38		38	
39		39		39		39	
40		40		40		40	
41		41		41		41	
42		42		42		42	
43		43		43		43	
44		44		44		44	
45		45		45		45	
46		46		46		46	
47		47		47		47	
48		48		48		48	

Section V I

Theoretical wiring diagrams Contents

Cars from car serial number 30 001

	Sheet
Rolls-Royce Silver Shadow II, Bentley T2, Rolls-Royce Silver Wraith II (without division)	
Right-hand drive cars	1
Left-hand drive cars for countries other than USA and Canada	2
Left-hand drive cars for USA and Canada with the exception of cars built to the 1980 Californian specification	3
Rolls-Royce Silver Wraith II (with division)	
Right-hand drive cars	4
Left-hand drive cars for countries other than USA and Canada	5
Rolls-Royce Corniche Convertible, Bentley Corniche Convertible	
Right-hand drive cars	6
Left-hand drive cars for countries other than USA and Canada	8
Left-hand drive cars for USA and Canada	10
Rolls-Royce Corniche Saloon, Bentley Corniche Saloon	
Right-hand drive cars	7
Left-hand drive cars for countries other than USA and Canada	9
Left-hand drive cars for USA and Canada	11
Rolls-Royce Camargue	
Right-hand drive cars	12
Left-hand drive cars for countries other than USA and Canada	13
Left-hand drive cars for USA and Canada	14
Rolls-Royce Silver Shadow II, Bentley T2 and Rolls-Royce Silver Wraith II 1980 model year cars for California	15
This wiring diagram can also be used with regard to the fuel injection system for Corniche and Camargue cars built to the 1980 Californian specification. For items other than those concerning the fuel injection system refer to sheets 10, 11 and 14 respectively	

Cars from car serial numbers

Silver Shadow II	-	SRX 34573
Silver Wraith II	-	LRG 34601
Bentley T2	-	SBH 34775
Corniche Saloon	-	CRH 34830
Corniche Convertible	-	DRX 33029

Refer to Supplement number 1

Printed in England
© Rolls-Royce Motors Limited 1980

Section VI

Theoretical wiring diagrams Modification number 1

Affecting sheets 1 to 14 inclusive
Applicable to all cars from car serial number 30 001

Speed control, stoplamps switch and associated wiring

Printed in England

© Rolls-Royce Motors Limited 1978

December 1978

T.S.D. 4200

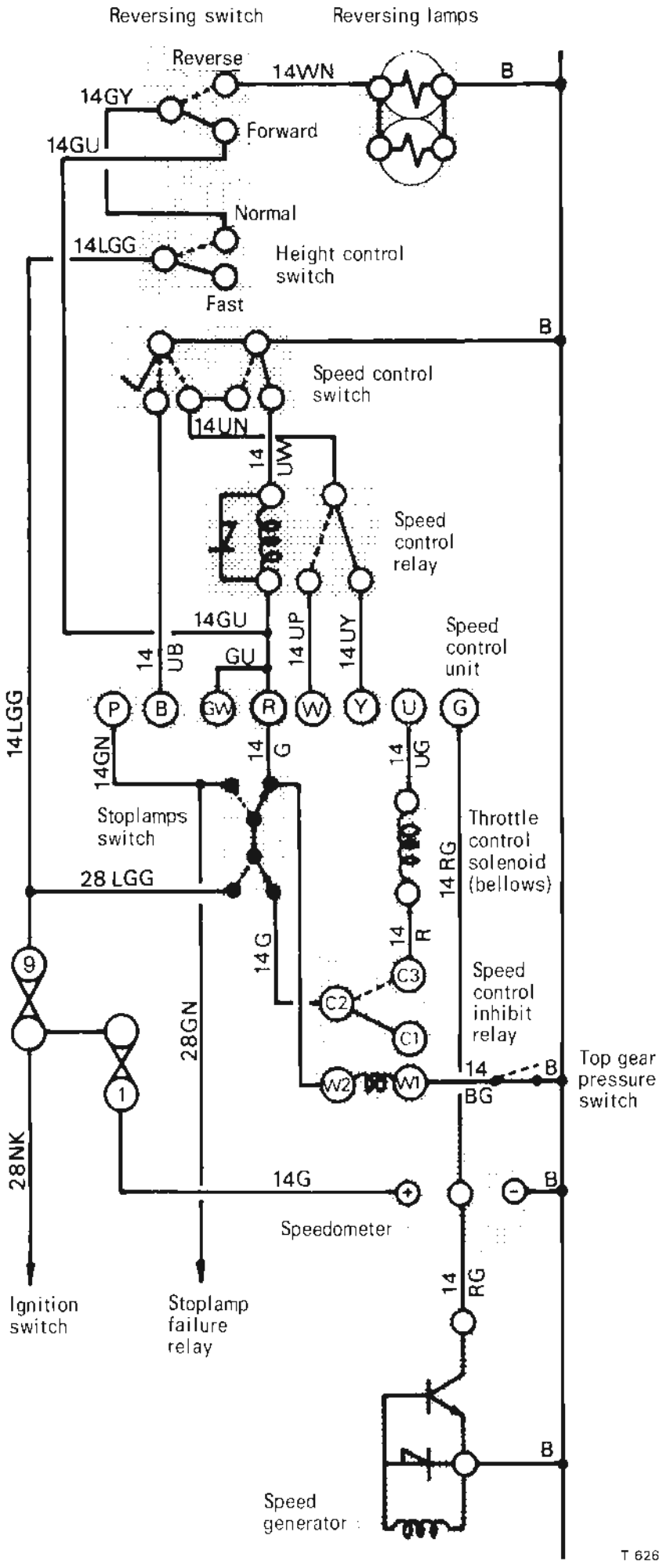
Reversing switch
Reversing lamps
Reverse
14WN
B
14GY
Forward
14GU
Normal
14LGG
Height control switch
Fast
B
Speed control switch
14UN
14 UW
Speed control relay
14GU
14 UB
GU
14 UP
14 UY
Speed control unit
P
B
GW
R
W
Y
U
G
14LGG
14GN
14 G
14 UG
Stoplamps switch
Throttle control solenoid (bellows)
14 RG
28 LGG
14 R
14 G
C3
C2
C1
Speed control inhibit relay
9
1
28GN
W2
W1
14
B
BG
Top gear pressure switch
28NK
14G
B
Speedometer
14
RG
Ignition switch
Stoplamp failure relay
B
Speed generator
T 626

Theoretical wiring diagram
Sheet 1

Rolls-Royce Silver Shadow II
Bentley T2
Rolls-Royce Silver Wraith II
(without division)

Right-hand drive cars from
car serial number 30 001

This document is the property of Rolls-Royce Motors Limited and may not be copied or communicated to a third party or used for any purpose other than that for which it is supplied without the express written authority of Rolls-Royce Motors Limited.

Whilst the information in this document is given in good faith based upon the latest knowledge available to Rolls-Royce Motors Limited, Rolls-Royce Motors Limited gives no warranty or representation concerning such information, and such information must not be taken as establishing any contractual or other commitment on the part of Rolls-Royce Motors Limited.

S 228

© Rolls-Royce Motors Limited 1977

Printed in England

February 1977

T.S.D. 4200

ALTERNATOR
CENTRALIZED DOOR LOCKING
CLOCK CIGAR LIGHTERS
SEAT ACTUATORS
GEARCHANGE
WINDOW LIFTS
HORNS
INTERIOR LIGHTS
DIRECTION IND
HAZARD WARNI
REVERSE LAMI
REGULATOR
ALTERNATOR
DOOR LOCK SOLENOIDS
BOOT LOCK SOLENOIDS
REAR CIGAR LIGHTERS
CENTRALIZED DOOR LOCKING SW.
BOOT UNLOCK SWITCH
FRONT CIGAR LIGHTER
CLOCK
SEAT MOTOR
SEAT ACTUATOR CLUTCH SOLS.
SEAT ACTUATOR RELAY
SEAT SWITCH
SEAT MOTOR
SEAT ACTUATOR
SEAT SWITCH
GEARCHANGE ACTUATOR
E.G.C. SELECTOR SWITCH
E.G.C. CUT-OUT
P.M. WINDOW LIFT MOTOR
E.W.L. SWITCH (LH REAR)
P.M. WINDOW LIFT MOTOR
E.W.L. SWITCH (R.H. REAR)
E.W.L. SWITCHES
E.W.L. SWITCH
E.W.L. CUT OUTS
HORNS
HORN BUTTON
HORN RELAY
UNDERBONNET LAMP & SWITCH
BOOT LAMP & SW.
CUBBY BOX LP & SW.
FUSE BOARD LP & SW.
INTERIOR LTS. DELAY UNIT
FRONT INT. LT.
INTERIOR LIGHTS RELAY
DOOR SW.
EDGE LTS.
REAR INTERIOR LIGHT & SWITCH
PASS'GRS INT. LT. SWITCH
FRONT INT. LT.
REAR INTERIOR LIGHT & SWITCH
WARNG LIGHTS
LH
RH
FRONT FLASHER
HAZARD WARN. SW.
D.I. SWITCH
D.I. FLASHER UNIT
HAZARD FLASHER UNIT
AMMETER
AMMETER SHUNT 65N
BATTERY TEMP. SENSOR
BATTERY
(SOL.)
STARTER RELAY
STARTER MOTOR
NEUTRAL START SWITCH (COLUMN)
NEUTRAL START SWITCH (G'BOX)
DIP SWITCH
HEAD SAFETY RELAY
HEADLAMPS
HEAD FLASH RELAY
HEAD FLASH SWITCH
SWITCHBOX
SWITCH PANELS
GEN. W.L.T.
LIGHTING
STARTER SWITCH
SWITCH BOX
IGNITION
KEY SWITCH
PANEL LIGHTS RELAY
PANEL LTS. DIMMING POT
TAIL LAMPS
PANEL LIGHTS CONTROL UNIT
OUTSIDE TEMP GAUGE
CLOCK
CIGAR LIGHTER
TAPE P'YER
BALANCE CONTROL
SPEEDO
4 IN 1 INSTRUMENT
G'CHANGE DIAL
NUMBER PLATE LAMPS
SIDELAMPS
REAR FOGLPS RELAY
FRONT FOG LAMPS
REAR FOGLPS SW. & W.L.T.
REAR FOG LAMPS
RADIO
FUSE
RADIO/TAPE CHANGE OVER RELAY
SPEAKERS
BALANCE CONTROL
TAPE PLAYER FILTER
TAPE PLAYER
AERIAL SWITCH
AERIAL
UP
DOWN
WIPER SWITCH
ELECTRONIC CONTROL UNIT
WASH SWITCH
RELAYS
WIPER MOTOR
WASH PUMP MOTOR
CHOKE THERMAL DELAY UNIT
HEADLP WASH RELAY
HEADLP WASH PUMP & WIPER MOTOR
ENG. COOLING FAN & SWITCH
CHOKE SOLENOID
IGNITION COIL
BALLAST RESISTORS
OPUS CONT. UNIT
CHOKE ON START RELAY
PETROL PUMP RLY.
PETROL PUMP ANTI-DIESEL SOL.
THROTTLE WEAKENER CUT OFF VALVE OR SWITCH
KICK DOWN SWITCH & SOLENOID
FASTEN SEAT BELT WARN. LT.
COOLANT TEMP TRANS.
SUMP UNIT
TANK UNIT
OIL PRESS. TRANSMITTR
O'SIDE TEMP SENSOR
OIL PRESS. SW & W LT
COOLANT WARN LT
PROBE
WASHER FLD TEST RELAY
BATTERY
AMMETER
STARTER
HEADLAMPS
PANEL LAMPS
SIDE & TAIL LAMPS
FOGLAMPS
RADIO/TAPE PLAYER
AERIAL
WINDSCREEN WIPERS & WASHER
HEADLAMP WASH-WIPE
IGNITION, CHOKE PETROL PUMPS
KICK DOWN THROTTLE WEAKENER CUT-OFF VALVE
GAUGES & V

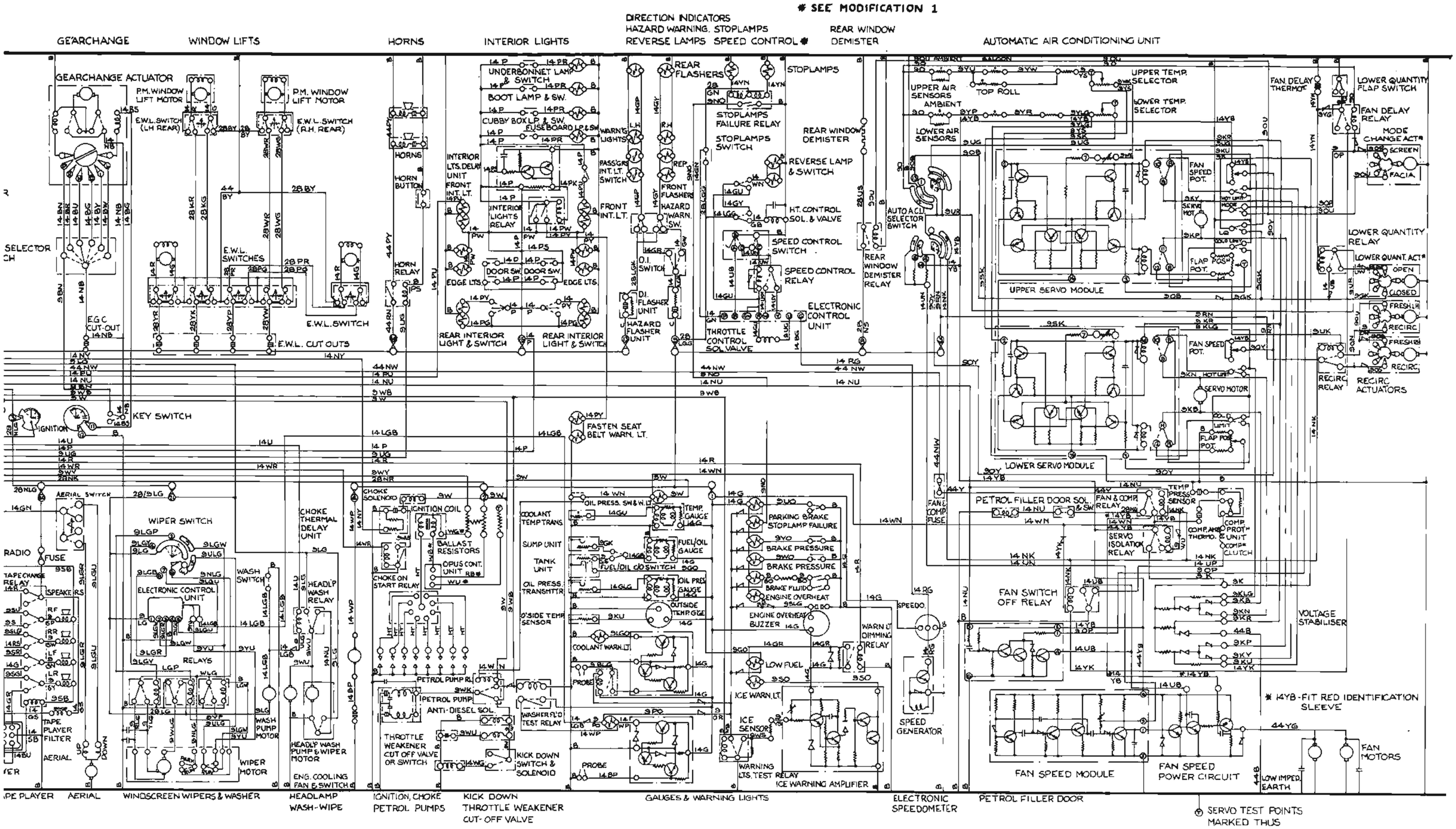

SEE MODIFICATION 1
GEARCHANGE
WINDOW LIFTS
HORNS
INTERIOR LIGHTS
DIRECTION INDICATORS
HAZARD WARNING, STOPLAMPS
REVERSE LAMPS SPEED CONTROL #
REAR WINDOW DEMISTER
AUTOMATIC AIR CONDITIONING UNIT
GEARCHANGE ACTUATOR
P.M. WINDOW LIFT MOTOR
E.W.L. SWITCH (LH REAR)
E.W.L. SWITCH (R.H. REAR)
E.W.L. SWITCHES
E.W.L. SWITCH
E.W.L. CUT OUTS
E.G.C. CUT-OUT
HORNS
HORN BUTTON
HORN RELAY
UNDERBONNET LAMP & SWITCH
BOOT LAMP & SW.
CUBBY BOX LP. & SW.
FUSEBOARD LP. & SW.
INTERIOR LTS. DELAY UNIT
FRONT INT. LT.
INTERIOR LIGHTS RELAY
DOOR SW.
EDGE LTS.
REAR INTERIOR LIGHT & SWITCH
WARN'G LIGHTS
PASS'GRS INT. LT. SWITCH
REAR FLASHERS
FRONT FLASHERS
HAZARD WARN. SW.
D.I. SWITCH
D.I. FLASHER UNIT
HAZARD FLASHER UNIT
STOPLAMPS
STOPLAMPS FAILURE RELAY
STOPLAMPS SWITCH
REVERSE LAMP & SWITCH
HT. CONTROL SOL. & VALVE
SPEED CONTROL SWITCH
SPEED CONTROL RELAY
ELECTRONIC CONTROL UNIT
THROTTLE CONTROL SOL. VALVE
REAR WINDOW DEMISTER
REAR WINDOW DEMISTER RELAY
AUTO A.C.U. SELECTOR SWITCH
UPPER AIR SENSORS
AMBIENT
TOP ROLL
LOWER AIR SENSORS
UPPER TEMP. SELECTOR
LOWER TEMP. SELECTOR
FAN SPEED POT.
SERVO MOT.
FLAP POS. POT.
UPPER SERVO MODULE
LOWER SERVO MODULE
FAN DELAY THERMOT.
LOWER QUANTITY FLAP SWITCH
FAN DELAY RELAY
MODE CHANGE ACT.
SCREEN
FACIA
LOWER QUANTITY RELAY
LOWER QUANT. ACT.
OPEN
CLOSED
FRESH LH
RECIRC
FRESH RH
RECIRC
RECIRC RELAY
RECIRC ACTUATORS
SELECTOR
KEY SWITCH
IGNITION
FASTEN SEAT BELT WARN. LT.
AERIAL SWITCH
RADIO
FUSE
TAPE CHANGE RELAY
SPEAKERS
TAPE PLAYER FILTER
AERIAL
WIPER SWITCH
ELECTRONIC CONTROL UNIT
RELAYS
WASH SWITCH
WASH PUMP MOTOR
WIPER MOTOR
CHOKE THERMAL DELAY UNIT
HEADL'P WASH RELAY
HEADL'P WASH PUMP & WIPER MOTOR
ENG. COOLING FAN & SWITCH
CHOKE SOLENOID
IGNITION COIL
BALLAST RESISTORS
OPUS CONT. UNIT
CHOKE ON START RELAY
PETROL PUMP RL.
PETROL PUMP
ANTI-DIESEL SOL.
THROTTLE WEAKENER CUT OFF VALVE OR SWITCH
KICK DOWN SWITCH & SOLENOID
WASHER FL'D TEST RELAY
COOLANT TEMP TRANS.
SUMP UNIT
TANK UNIT
OIL PRESS. TRANSMTTR.
O'SIDE TEMP SENSOR
OIL PRESS. SW & W.LT.
TEMP. GAUGE
FUEL/OIL GAUGE
FUEL/OIL C/O SWITCH
OIL PRES. GAUGE
OUTSIDE TEMP. G'GE
COOLANT WARN. LT.
PROBE
PARKING BRAKE STOPLAMP FAILURE
BRAKE PRESSURE
BRAKE FLUID
ENGINE OVERHEAT
ENGINE OVERHEAT BUZZER
LOW FUEL
ICE WARN. LT.
ICE SENSOR
WARNING LTS. TEST RELAY
ICE WARNING AMPLIFIER
WARN LT DIMMING RELAY
SPEEDO.
SPEED GENERATOR
FAN & COMP. FUSE
PETROL FILLER DOOR SOL. & SW.
FAN & COMP. RELAY
TEMP. PRESS. SENSOR
SERVO ISOLATION RELAY
COMP. AND THERMO.
COMP. PROT. UNIT
COMP. CLUTCH
FAN SWITCH OFF RELAY
VOLTAGE STABILISER
FAN SPEED MODULE
FAN SPEED POWER CIRCUIT
FAN MOTORS
LOW IMPED. EARTH
* 14YB - FIT RED IDENTIFICATION SLEEVE
TAPE PLAYER
AERIAL
WINDSCREEN WIPERS & WASHER
HEADLAMP WASH-WIPE
IGNITION, CHOKE PETROL PUMPS
KICK DOWN THROTTLE WEAKENER CUT-OFF VALVE
GAUGES & WARNING LIGHTS
ELECTRONIC SPEEDOMETER
PETROL FILLER DOOR
SERVO TEST POINTS MARKED THUS

Theoretical wiring diagram
Sheet 2

Rolls-Royce Silver Shadow II
Bentley T2
Rolls-Royce Silver Wraith II
(without division)

Left-hand drive cars for countries other than USA and Canada from car serial number 30 001

This document is the property of Rolls-Royce Motors Limited and may not be copied or communicated to a third party or used for any purpose other than that for which it is supplied without the express written authority of Rolls-Royce Motors Limited.

Whilst the information in this document is given in good faith based upon the latest knowledge available to Rolls-Royce Motors Limited, Rolls-Royce Motors Limited gives no warranty or representation concerning such information, and such information must not be taken as establishing any contractual or other commitment on the part of Rolls-Royce Motors Limited.

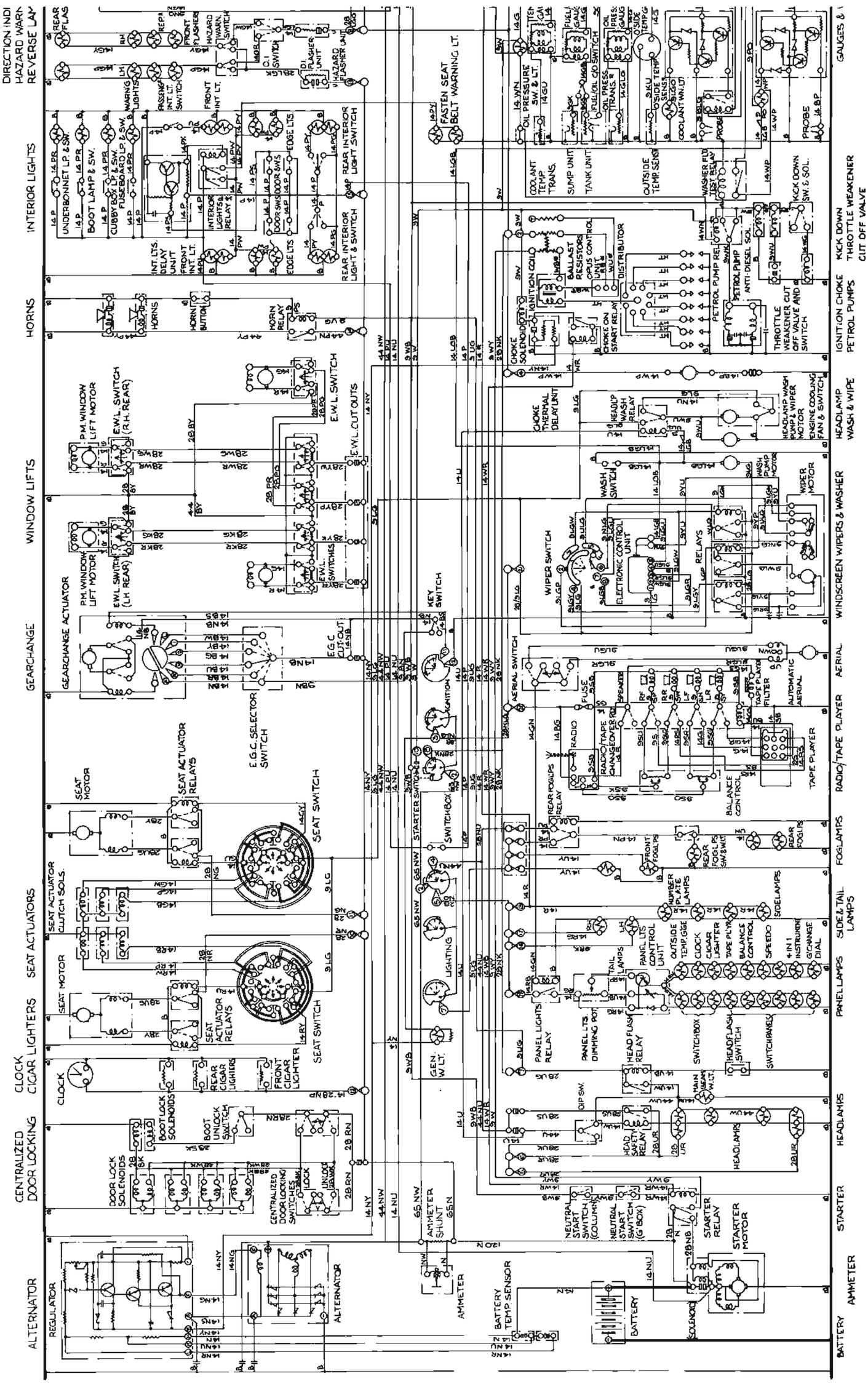

© Rolls-Royce Motors Limited 1977
Printed in England S 229

* SEE MODIFICATION 1

GEARCHANGE | WINDOW LIFTS | HORNS | INTERIOR LIGHTS | DIRECTION INDICATORS HAZARD WARNING STOPLAMPS REVERSE LAMPS SPEED CONTROL* | REAR WINDOW DEMISTER | AUTOMATIC AIR CONDITIONING UNIT

GEARCHANGE ACTUATOR
P.M. WINDOW LIFT MOTOR
E.W.L. SWITCH (LH REAR)
P.M. WINDOW LIFT MOTOR
E.W.L. SWITCH (R.H. REAR)
E.W.L. SWITCHES
E.W.L. CUT OUTS
E.W.L. SWITCH
E.G.C. CUT-OUT
SELECTOR H
KEY SWITCH
IGNITION
AERIAL SWITCH
AUTOMATIC AERIAL
TAPE PLAYER FILTER
FUSE
WIPER SWITCH
ELECTRONIC CONTROL UNIT
RELAYS
WASH SWITCH
WASH PUMP MOTOR
WIPER MOTOR
HEADLP WASH RELAY
HEADLAMP WASH PUMP & WIPER MOTOR
ENGINE COOLING FAN & SWITCH
CHOKE THERMAL DELAY UNIT
CHOKE SOLENOID
IGNITION COIL
BALLAST RESISTORS
OPUS CONTROL UNIT
DISTRIBUTOR
CHOKE ON START RELAY
PETROL PUMP REL
PETROL PUMP
ANTI-DIESEL SOL.
THROTTLE WEAKENER CUT OFF VALVE AND SWITCH
KICK DOWN SW. & SOL.
HORNS
HORN BUTTON
HORN RELAY
UNDERBONNET LP. & SW.
BOOT LAMP & SW.
CUBBY BOX LP. & SW.
FUSEBOARD LP. & SW.
INT. LTS. DELAY UNIT
FRONT INT. LT.
INTERIOR LIGHTS RELAY
DOOR SWS.
DOOR SWS.
EDGE LTS.
EDGE LTS.
REAR INTERIOR LIGHT & SWITCH
REAR INTERIOR LIGHT SWITCH
FASTEN SEAT BELT WARNING LT.
WARN'G LIGHTS
PASSENGR INT. LT. SWITCH
FRONT INT. LT.
DI. SWITCH
DI FLASHER UNIT
HAZARD FLASHER UNIT
REAR FLASHERS
FRONT FLASHERS
HAZARD WARN. SWITCH
STOPLPS
STOPLAMPS FAILURE RELAY
STOPLAMPS SWITCH
REVERSE LP & SWITCH
HT. CONTROL SOL. & VALVE
SPEED CONTROL SWITCH
SPEED CONTROL RELAY
ELECTRONIC CONTROL UNIT
THROTTLE CONTROL SOL. VALVE
REAR WINDOW DEMISTER
REAR WINDOW DEMISTER RELAY
COOLANT TEMP. TRANS.
SUMP UNIT
TANK UNIT
OUTSIDE TEMP. SENS.
COOLANT WN. LT.
PROBE
WASHER FLD TEST RELAY
OIL PRESSURE SW. & LT.
TEMP. GAUGE
FUEL/OIL GAUGE
FUEL/OIL C/O SWITCH
OIL PRESS. TRANS.
OIL PRESS. GAUGE
O'SIDE TEMP. SENS.
O'SIDE TEMP GGE
PARKING BRAKE STOP LP FAILURE
BRAKE PRESSURE
BRAKE PRESSURE
ENGINE OVERH'T PRB
ENGINE OVERH'T BUZZER
LOW FUEL
WARN LT. DIMS RELAY
ICE WARN. LIGHT
ICE SENSOR
WARNING LTS. TEST RLY
ICE WARNING AMP.
SPEEDO
SPEED GENERATOR
UPPER AIR SENSORS
AMBIENT
LOWER AIR SENSOR
AUTO A.C.H. SELECTOR SWITCH
TOP ROLL
KNEE ROLL
UPPER TEMP SELECTOR
LOWER TEMP SELECTOR
UPPER SERVO MODULE
FAN SPEED POT.
SERVO MOTOR
FLAP POT.
LOWER SERVO MODULE
FAN SPEED POT.
SERVO MOTOR
FLAP POT.
FAN SPEED MODULE
FAN SPEED POWER CIRCUIT
FAN & COMP. FUSE
PETROL FILLER DOOR SOL. & SW.
FAN & COMP. RELAY
SERVO ISOLATION RELAY
TEMP PRESS SENSOR
COMP AMB. THERM
COMP PROTECT UNIT
COMP. CLUTCH
FAN SWITCH OFF RELAY
FAN DELAY THERMOSTAT
FAN DELAY RELAY
LOWER QUANTITY FLAP SWITCH
UPPER MODE CHANGE ACTR
SCREEN
FACIA
LOWER QUANTITY RELAY
LOWER QUANTY ACTR
OPEN
CLOSED
FRESH LH
RECIRC
FRESH RH
RECIRC
RECIRC RELAY
RECIRC. ACTUATORS
VOLTAGE STABILISER
FAN MOTORS
LOW IMPED EARTH

* 14YB - FIT RED IDENTIFICATION SLEEVE

E PLAYER | AERIAL | WINDSCREEN WIPERS & WASHER | HEADLAMP WASH & WIPE | IGNITION CHOKE PETROL PUMPS | KICK DOWN THROTTLE WEAKENER CUT OFF VALVE | GAUGES & WARNING LIGHTS | ELECTRONIC SPEEDOMETER | PETROL FILLER DOOR

† SERVO TEST POINTS MARKED THUS

Theoretical wiring diagram
Sheet 3

Rolls-Royce Silver Shadow II
Bentley T2
Rolls-Royce Silver Wraith II
(without division)

Left-hand drive cars for USA and Canada
from car serial number 30 001

This document is the property of Rolls-Royce Motors Limited and may not be copied or communicated to a third party or used for any purpose other than that for which it is supplied without the express written authority of Rolls-Royce Motors Limited.

Whilst the information in this document is given in good faith based upon the latest knowledge available to Rolls-Royce Motors Limited, Rolls-Royce Motors Limited gives no warranty or representation concerning such information, and such information must not be taken as establishing any contractual or other commitment on the part of Rolls-Royce Motors Limited.

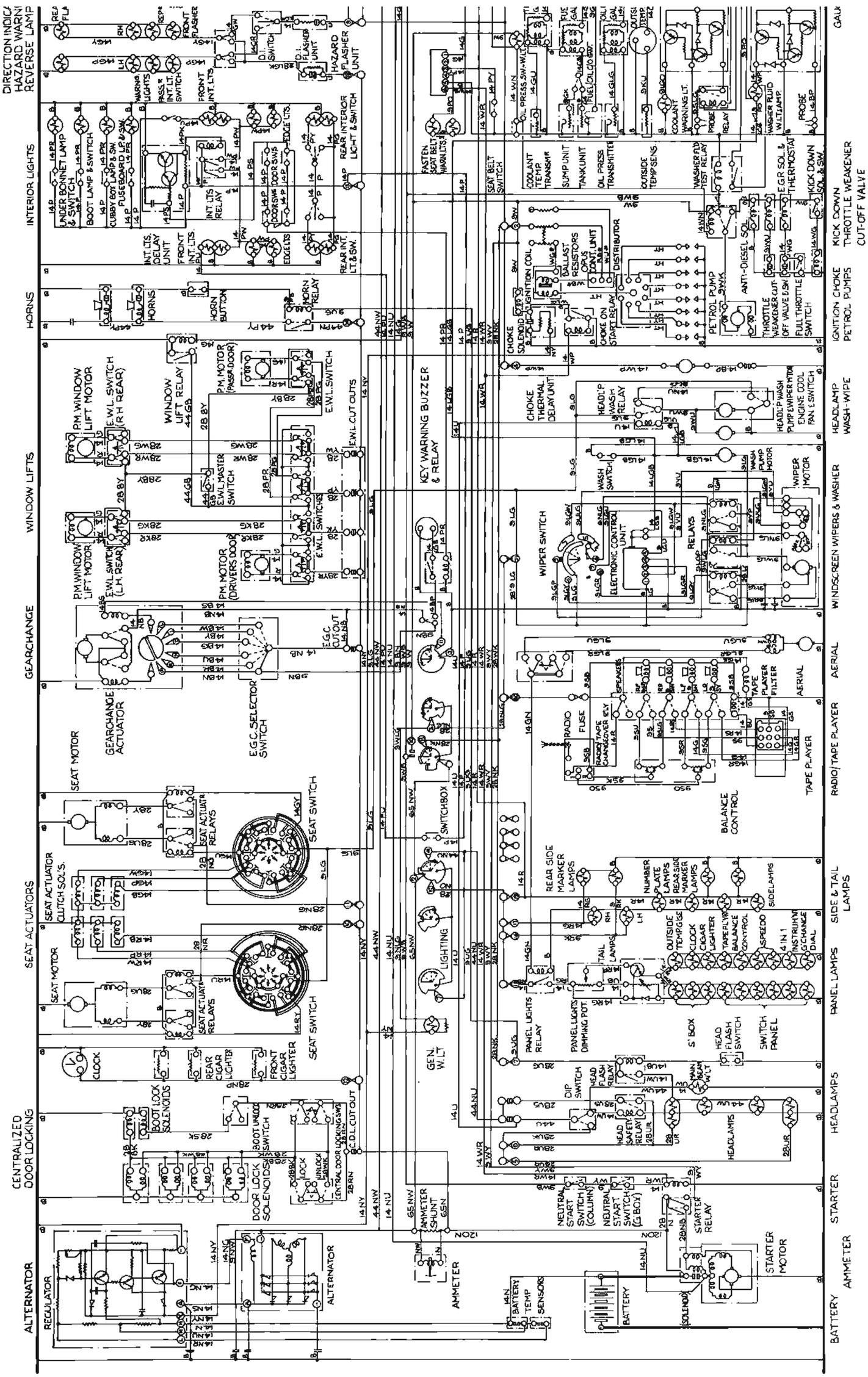

© Rolls-Royce Motors Limited 1977
Printed in England S 230

* SEE MODIFICATION 1

GEARCHANGE | WINDOW LIFTS | HORNS | INTERIOR LIGHTS | DIRECTION INDICATORS HAZARD WARNING REVERSE LAMPS | STOPLAMPS SPEED CONTROL* | REAR WINDOW DEMISTER | AUTOMATIC AIR CONDITIONING UNIT

RCHANGE JATOR

SELECTOR CH

P.M. WINDOW LIFT MOTOR

E.W.L. SWITCH (L.H. REAR)

P.M. WINDOW LIFT MOTOR

E.W.L. SWITCH (R.H. REAR)

WINDOW LIFT RELAY 44 GB

P.M. MOTOR (DRIVERS DOOR)

E.W.L. MASTER SWITCH

P.M. MOTOR (PASSR DOOR)

E.W.L. SWITCHES

E.W.L. SWITCH

E.W.L. CUT OUTS

E.G.C. CUT OUT

HORNS

HORN BUTTON

HORN RELAY

UNDER BONNET LAMP & SWITCH

BOOT LAMP & SWITCH

CUBBY BOX LAMP & SW.

FUSEBOARD LP & SW.

INT. LTS. DELAY UNIT

FRONT INT. LTS.

INT. LTS RELAY

DOOR SWS

EDGE LTS.

REAR INT. LT. & SW.

REAR INTERIOR LIGHT & SWITCH

WARNING LIGHTS

PASS.* INT. LT. SWITCH

FRONT INT. LTS.

REAR FLASHERS

FRONT FLASHERS

D.I. SWITCH

D.I. FLASHER UNIT

HAZARD FLASHER UNIT

STOPLAMPS

STOPLAMPS FAILURE RELAY

STOPLAMPS SWITCH

REVERSE LAMP & SWITCH

HT CONTROL SOL. & VALVE

SPEED CONTROL SWITCH

SPEED CONTROL UNIT

THROTTLE CONT. SOL VALVE

ELECTRONIC CONTROL UNIT

REAR WINDOW DEMISTER

REAR WINDOW DEMISTER RELAY

AUTO A.C.U. SELECTOR SWITCH

AMBIENT | SALOON

UPPER AIR SENSORS

TOP ROLL

UPPER TEMP. SELECTOR

LOWER TEMP. SELECTOR

LOWER AIR SENSOR

FAN SPEED POT.

SERVO MOTOR

FLAP POT.

UPPER SERVO MODULE

FAN DELAY THERMOSTAT

LOWER QUANT. FLAP SWITCH

FAN DELAY RELAY

UPPER MODE CHANGE ACTR.

SCREEN

FACIA

LOWER QUANT. RELAY

LOWER QUANT. ACTR.

OPEN

CLOSED

FRESH LH

RECIRC

FRESH RH

RECIRC

RECIRC ACTUATORS

RECIRC RELAY

LOWER SERVO MODULE

KEY WARNING BUZZER & RELAY

WIPER SWITCH

ELECTRONIC CONTROL UNIT

WASH SWITCH

RELAYS

WIPER MOTOR

WASH PUMP MOTOR

HEADL'P WASH RELAY

CHOKE THERMAL DELAY UNIT

HEADL'P WASH PUMP & WIPER MTOR

ENGINE COOL FAN E.SWITCH

CHOKE SOLENOID

IGNITION COIL

BALLAST RESISTORS

OPUS CONT. UNIT

DISTRIBUTOR

CHOKE ON START RELAY

PETROL PUMP

ANTI-DIESEL SOL.

THROTTLE WEAKENER CUT-OFF VALVE & SW.

FULL THROTTLE SWITCH

E.G.R. SOL. & THERMOSTAT

KICK DOWN SOL. & SW.

FASTEN SEAT BELT WARN LTS.

SEAT BELT SWITCH

COOLANT TEMP TRANSMR

SUMP UNIT

TANK UNIT

OIL PRESS. TRANSMITTER

OUTSIDE TEMP SENS.

WASHER FLD TEST RELAY

OIL PRESS. SW-W.L.T.

TEMP. GAUGE

FUEL/OIL GAUGE

OIL PRESS GAUGE

OUTSIDE TEMP GGE

COOLANT WARNING LT.

PROBE RELAY

WASHER FLUID W.L.T. & AMP.

PROBE

FAN & COMP. FUSE

PARKING BRAKE

STOPLAMP FAILURE

BRAKE PRESSURE

BRAKE PRESSURE

BRAKE F.L.D.

ENGINE OVERHEAT

ENGINE OVERHEAT BUZZER

LOW FUEL

ICE WARN LT.

ICE SENSOR

WARN. LTS. TEST RELAY

WARN. LT. DIMMD RELAY

SPEEDO

SPEED GENERATOR

ICE WARNING AMPLIFIER

PETROL FILLER DOOR SOL. & SW.

FAN & COMP. RELAY

TEMP. PRESS* SENSOR

COMP. AMB. THERM*

COMPR PROTN UNIT. COMPR CLUTCH

SERVO ISOLN. RELAY

FAN SWITCH OFF RELAY

FAN SPEED MODULE

FAN SPEED POWER CIRCUIT

VOLTAGE STABILISER

* 14YB-FIT IDENTIFICATION SLEEVE

LOW IMPEDANCE EARTH

FAN MOTORS

RADIO FUSE

SPEAKERS

TAPE PLAYER FILTER

AERIAL

LAYER | AERIAL | WINDSCREEN WIPERS & WASHER | HEADLAMP WASH-WIPE | IGNITION CHOKE PETROL PUMPS | KICK DOWN THROTTLE WEAKENER CUT-OFF VALVE | GAUGES & WARNING LIGHTS | ELECTRONIC SPEEDOMETER | PETROL FILLER DOOR | TEST POINTS MARKED THUS

Theoretical wiring diagram
Sheet 4

Rolls-Royce Silver Wraith II (with division)

Right-hand drive cars from
car serial number 30 001

This document is the property of Rolls-Royce Motors Limited and may not be copied or communicated to a third party or used for any purpose other than that for which it is supplied without the express written authority of Rolls-Royce Motors Limited.

Whilst the information in this document is given in good faith based upon the latest knowledge available to Rolls-Royce Motors Limited, Rolls-Royce Motors Limited gives no warranty or representation concerning such information, and such information must not be taken as establishing any contractual or other commitment on the part of Rolls-Royce Motors Limited.

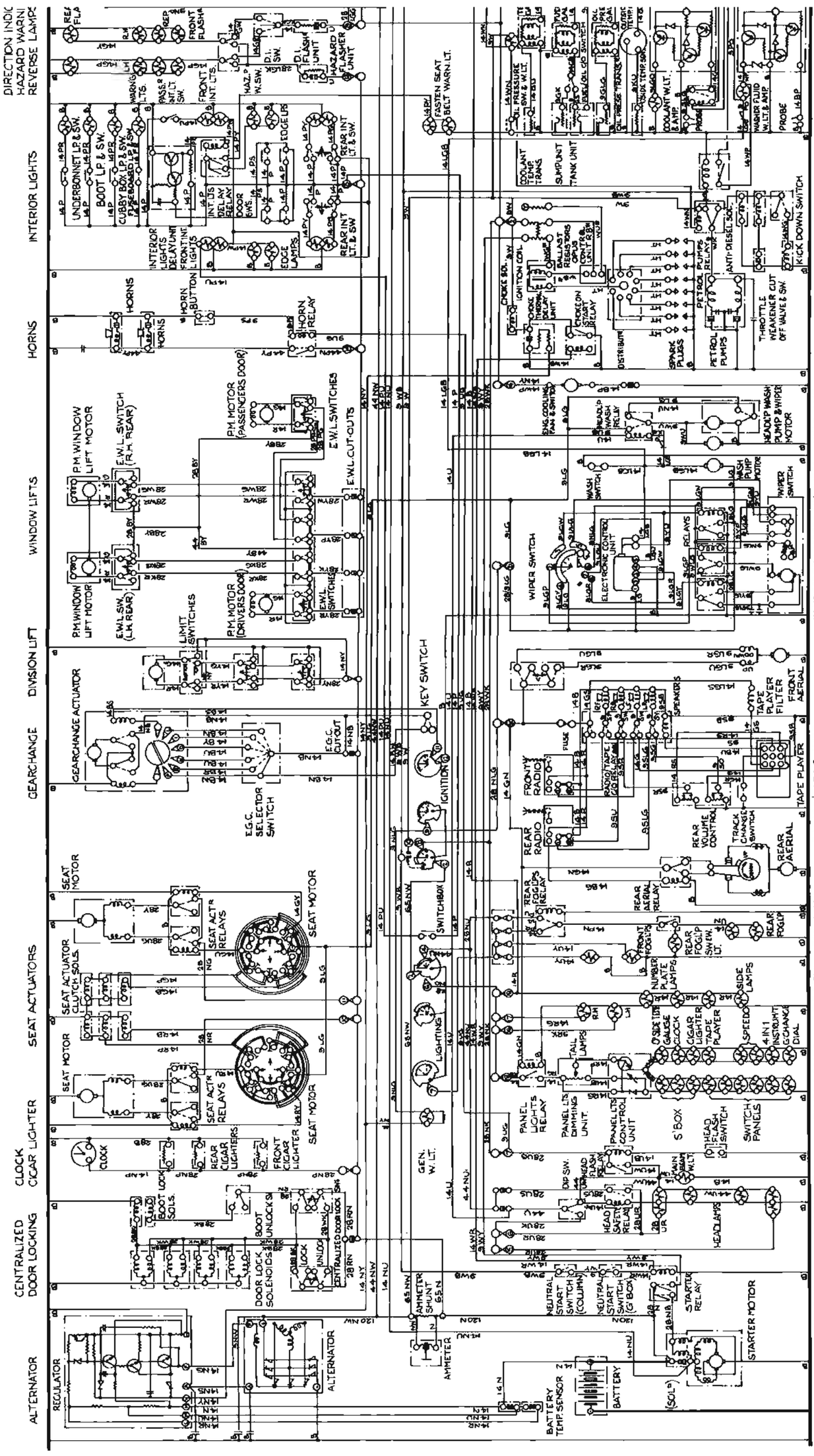

© Rolls-Royce Motors Limited 1977
Printed in England S 231

* SEE MODIFICATION 1

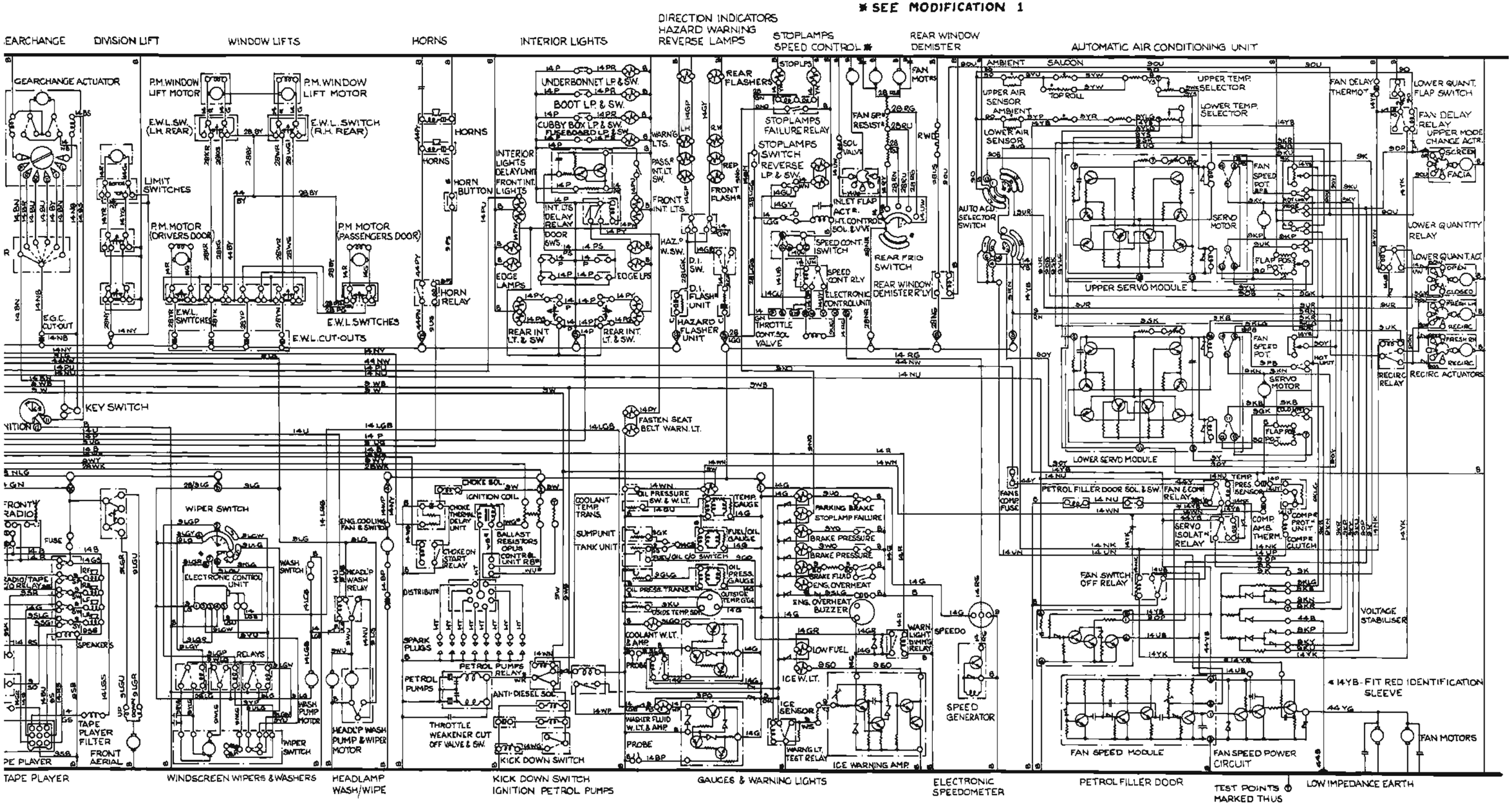

Theoretical wiring diagram
Sheet 5

Rolls-Royce Silver Wraith II (with division)

Left-hand drive cars for countries other than USA and Canada from car serial number 30 001

This document is the property of Rolls-Royce Motors Limited and may not be copied or communicated to a third party or used for any purpose other than that for which it is supplied without the express written authority of Rolls-Royce Motors Limited.

Whilst the information in this document is given in good faith based upon the latest knowledge available to Rolls-Royce Motors Limited, Rolls-Royce Motors Limited gives no warranty or representation concerning such information, and such information must not be taken as establishing any contractual or other commitment on the part of Rolls-Royce Motors Limited.

© Rolls-Royce Motors Limited 1977

Printed in England

February 1977

T.S.D. 4200

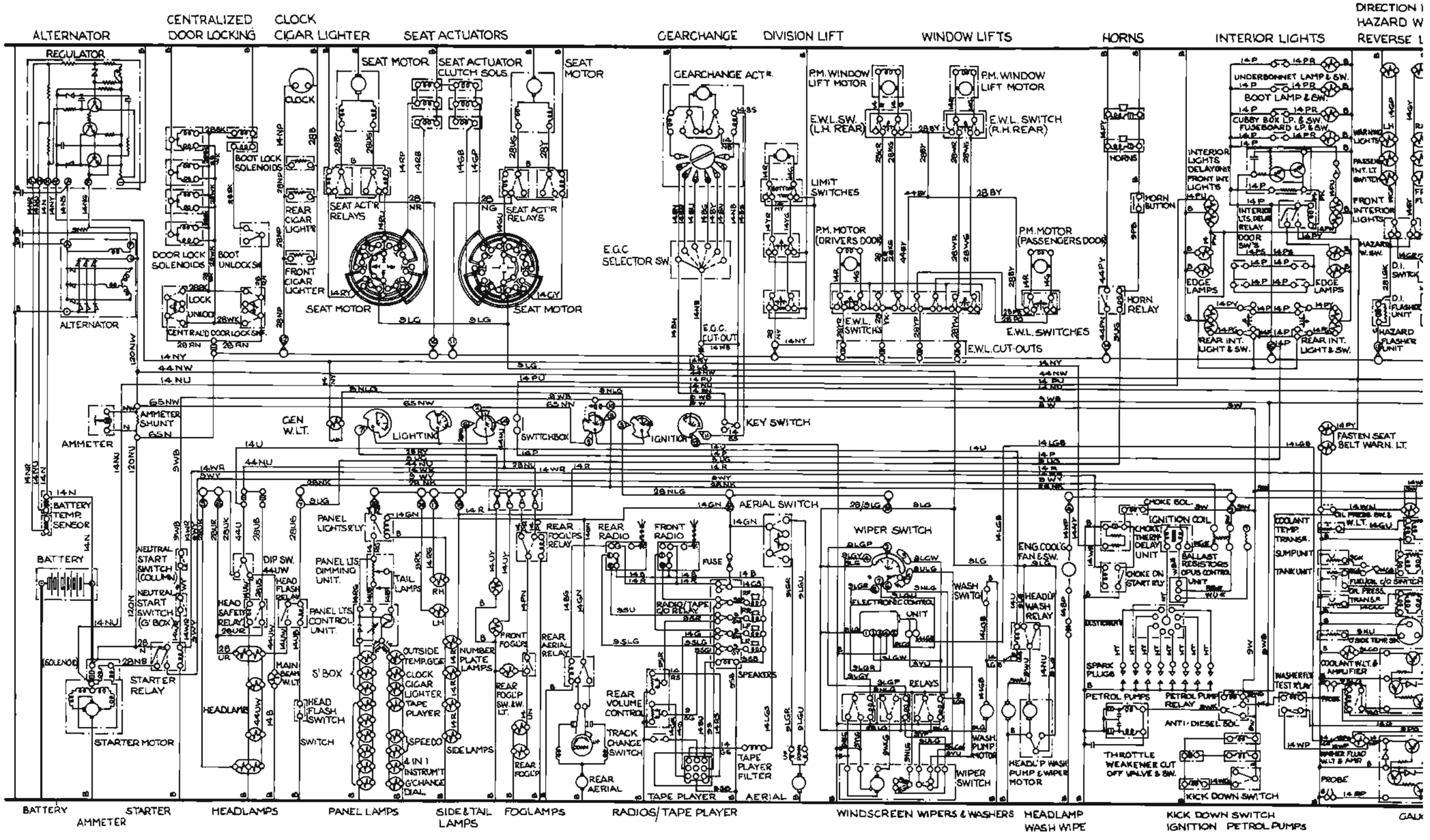

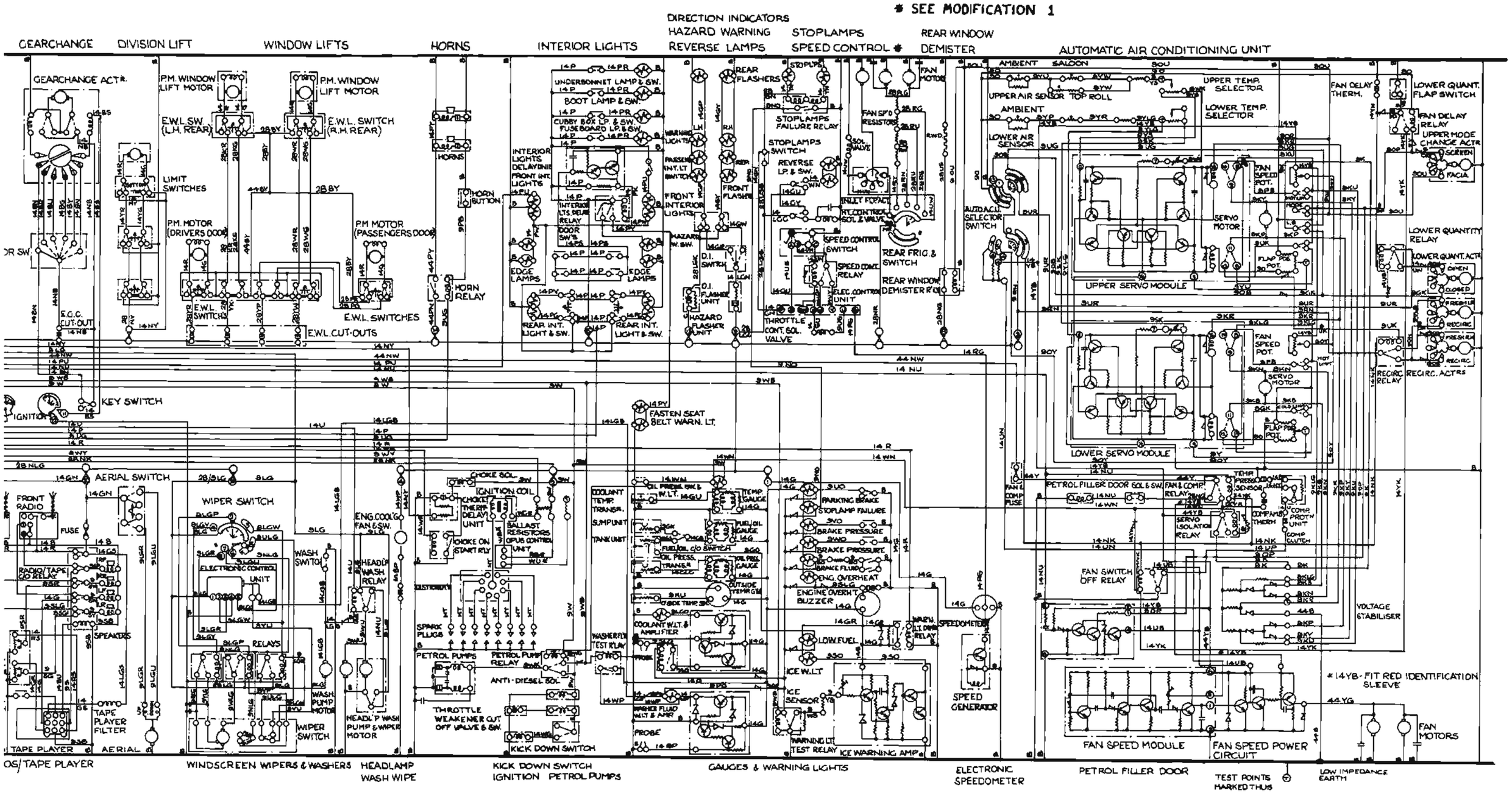

* SEE MODIFICATION 1
GEARCHANGE
DIVISION LIFT
WINDOW LIFTS
HORNS
INTERIOR LIGHTS
DIRECTION INDICATORS
HAZARD WARNING
REVERSE LAMPS
STOPLAMPS
SPEED CONTROL *
REAR WINDOW
DEMISTER
AUTOMATIC AIR CONDITIONING UNIT
GEARCHANGE ACTR.
P.M. WINDOW LIFT MOTOR
E.W.L. SW. (L.H. REAR)
E.W.L. SWITCH (R.H. REAR)
LIMIT SWITCHES
P.M. MOTOR (DRIVERS DOOR)
P.M. MOTOR (PASSENGERS DOOR)
E.W.L. SWITCHES
E.W.L. CUT-OUTS
E.G.C. CUT-OUT
HORNS
HORN BUTTON
HORN RELAY
UNDERBONNET LAMP & SW.
BOOT LAMP & SW.
CUBBY BOX LP. & SW.
FUSEBOARD LP. & SW.
INTERIOR LIGHTS DELAY UNIT
FRONT INT. LIGHTS
EDGE LAMPS
REAR INT. LIGHT & SW.
FRONT INTERIOR LIGHTS
HAZARD FLASHER UNIT
REAR FLASHERS
STOPLAMPS FAILURE RELAY
STOPLAMPS SWITCH
REVERSE LP. & SW.
SPEED CONTROL SWITCH
SPEED CONT. RELAY
ELEC. CONTROL UNIT
THROTTLE CONT. SOL. VALVE
FAN SP'D RESISTORS
REAR FRIG. & SWITCH
REAR WINDOW DEMISTER R'LY
AMBIENT
SALOON
UPPER AIR SENSOR
TOP ROLL
UPPER TEMP. SELECTOR
LOWER TEMP. SELECTOR
LOWER AIR SENSOR
AUTO A.C.U. SELECTOR SWITCH
UPPER SERVO MODULE
LOWER SERVO MODULE
FAN SPEED POT.
SERVO MOTOR
FLAP POS. POT.
FAN DELAY THERM.
LOWER QUANT. FLAP SWITCH
FAN DELAY RELAY
UPPER MODE CHANGE ACTR.
SCREEN
FACIA
LOWER QUANTITY RELAY
LOWER QUANT. ACTR.
OPEN
CLOSED
FRESH
RECIRC.
RECIRC. RELAY
RECIRC. ACTRS
KEY SWITCH
IGNITION
FASTEN SEAT BELT WARN. LT.
AERIAL SWITCH
FRONT RADIO
FUSE
RADIO/TAPE C/O RELAY
SPEAKERS
TAPE PLAYER FILTER
TAPE PLAYER
AERIAL
WIPER SWITCH
ELECTRONIC CONTROL UNIT
RELAYS
WASH SWITCH
WASH PUMP MOTOR
WIPER SWITCH
ENG. COOL'G FAN & SW.
HEADL'P WASH RELAY
HEADL'P WASH PUMP & WIPER MOTOR
CHOKE SOL.
IGNITION COIL
CHOKE THERM. DELAY UNIT
CHOKE ON START R'LY
BALLAST RESISTORS OPUS CONTROL UNIT
SPARK PLUGS
PETROL PUMPS
PETROL PUMP RELAY
ANTI-DIESEL SOL.
THROTTLE WEAKENER CUT OFF VALVE & SW.
KICK DOWN SWITCH
COOLANT TEMP. TRANSR.
SUMP UNIT
TANK UNIT
WASHER FLUID TEST R'LAY
OIL PRESS. SW. & W.L.T.
TEMP. GAUGE
FUEL/OIL GAUGE
FUEL/OIL C/O SWITCH
OIL PRESS. TRANSR.
OIL PRESS. GAUGE
OUTSIDE TEMP. GAUGE
COOLANT W.L.T. & AMPLIFIER
WASHER FLUID W.L.T. & AMP.
PROBE
PARKING BRAKE
STOPLAMP FAILURE
BRAKE PRESSURE
BRAKE FLUID
ENG. OVERHEAT
ENGINE OVERH'T BUZZER
LOW FUEL
ICE W.L.T.
ICE SENSOR
WARNING LT. TEST RELAY
ICE WARNING AMP.
SPEEDOMETER
SPEED GENERATOR
PETROL FILLER DOOR SOL. & SW.
FAN & COMP. RELAY
SERVO ISOLATION RELAY
COMP. AMB. THERM.
COMP. PROT'N UNIT
COMP. CLUTCH
FAN SWITCH OFF RELAY
VOLTAGE STABILISER
* 14YB - FIT RED IDENTIFICATION SLEEVE
FAN SPEED MODULE
FAN SPEED POWER CIRCUIT
FAN MOTORS
OS/TAPE PLAYER
WINDSCREEN WIPERS & WASHERS
HEADLAMP WASH WIPE
KICK DOWN SWITCH IGNITION PETROL PUMPS
GAUGES & WARNING LIGHTS
ELECTRONIC SPEEDOMETER
PETROL FILLER DOOR
TEST POINTS MARKED THUS
LOW IMPEDANCE EARTH

Theoretical wiring diagram
Sheet 6

Rolls-Royce Corniche Convertible
Bentley Corniche Convertible

Right-hand drive cars from
car serial number 30 001

This document is the property of Rolls-Royce Motors Limited and may not be copied or communicated to a third party or used for any purpose other than that for which it is supplied without the express written authority of Rolls-Royce Motors Limited.

Whilst the information in this document is given in good faith based upon the latest knowledge available to Rolls-Royce Motors Limited, Rolls-Royce Motors Limited gives no warranty or representation concerning such information, and such information must not be taken as establishing any contractual or other commitment on the part of Rolls-Royce Motors Limited.

 © Rolls-Royce Motors Limited 1977

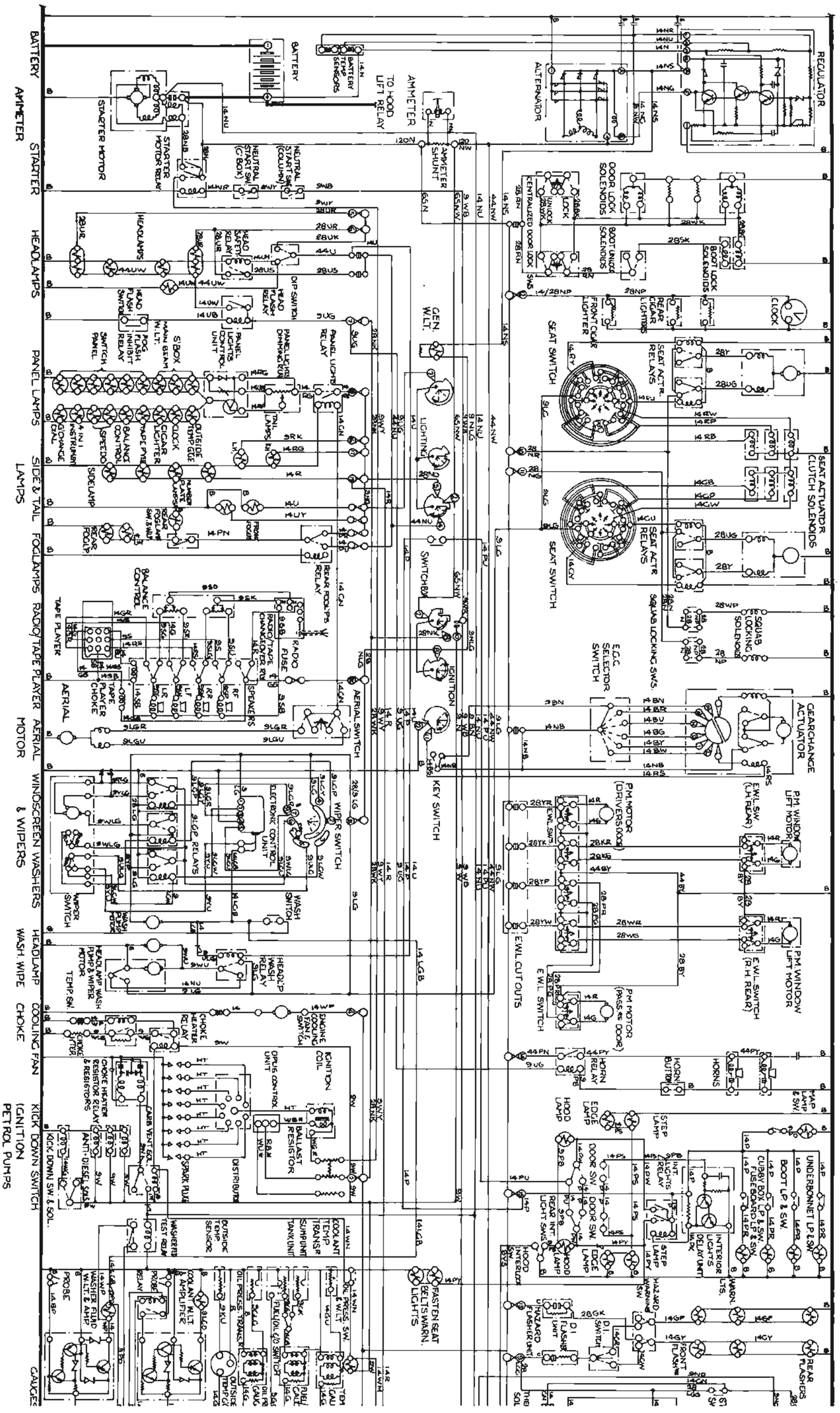

* SEE MODIFICATION 1

CKING | GEARCHANGE | WINDOW LIFTS | HORNS | INTERIOR LAMPS | DIRECTION INDICATORS HAZARD WARNING | STOPLAMPS REVERSE LAMPS SPEED CONTROL * | HOOD LIFT UNIT | AUTOMATIC AIR CONDITIONING UNIT

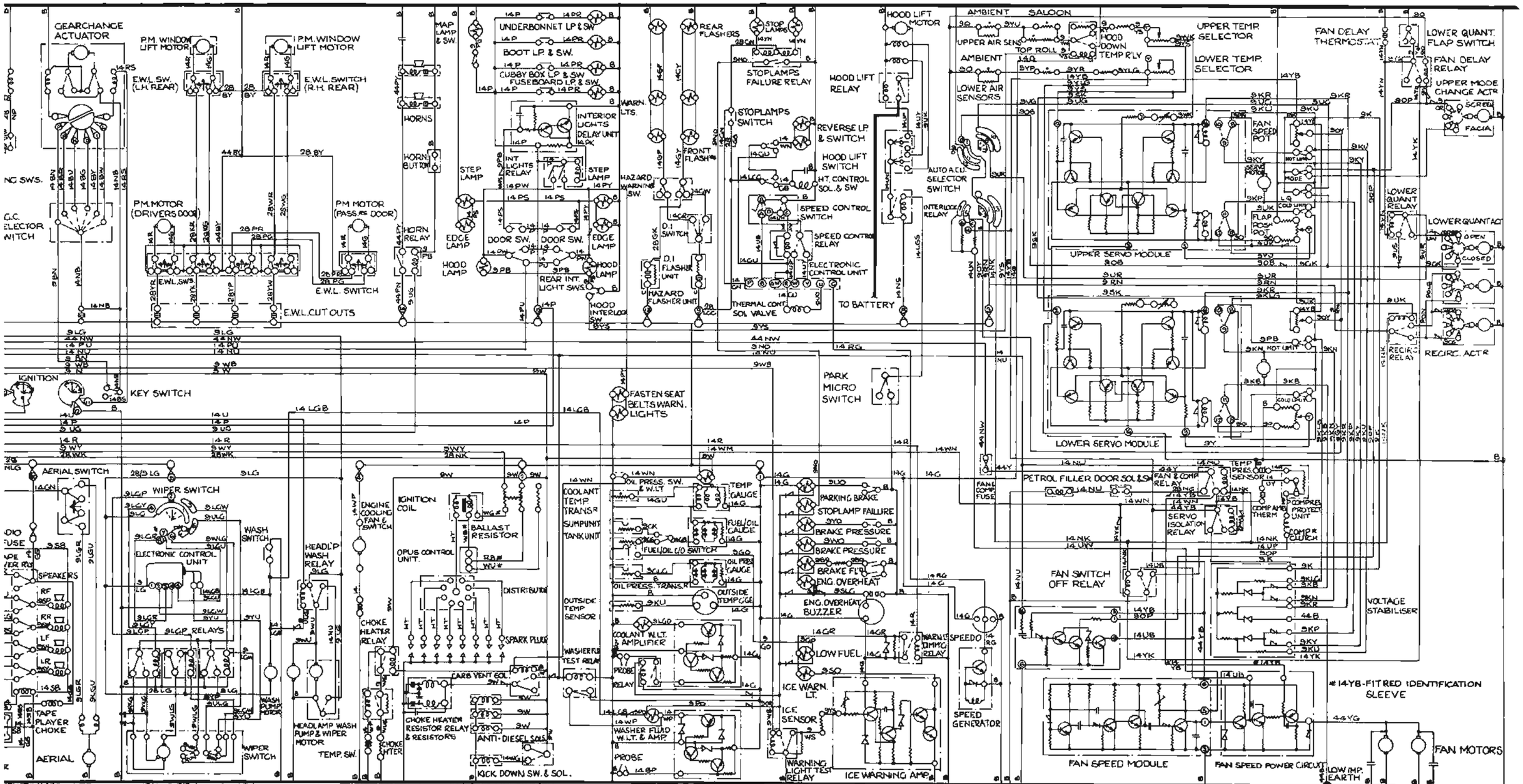

TAPE PLAYER | AERIAL MOTOR | WINDSCREEN WASHERS & WIPERS | HEADLAMP WASH. WIPE | COOLING FAN CHOKE | KICK DOWN SWITCH IGNITION PETROL PUMPS | GAUGES & WARNING LIGHTS | ELECTRONIC SPEEDOMETER | PETROL FILLER DOOR | FAN SPEED | COMPRESSOR PROTECTION UNIT

TEST POINTS MARKED THUS

Theoretical wiring diagram
Sheet 7

Rolls-Royce Corniche Saloon
Bentley Corniche Saloon

Right-hand drive cars from
car serial number 30 001

This document is the property of Rolls-Royce Motors Limited and may not be copied or communicated to a third party or used for any purpose other than that for which it is supplied without the express written authority of Rolls-Royce Motors Limited.

Whilst the information in this document is given in good faith based upon the latest knowledge available to Rolls-Royce Motors Limited, Rolls-Royce Motors Limited gives no warranty or representation concerning such information, and such information must not be taken as establishing any contractual or other commitment on the part of Rolls-Royce Motors Limited.

S 234

© Rolls-Royce Motors Limited 1977

Printed in England

February 1977

T.S.D. 4200

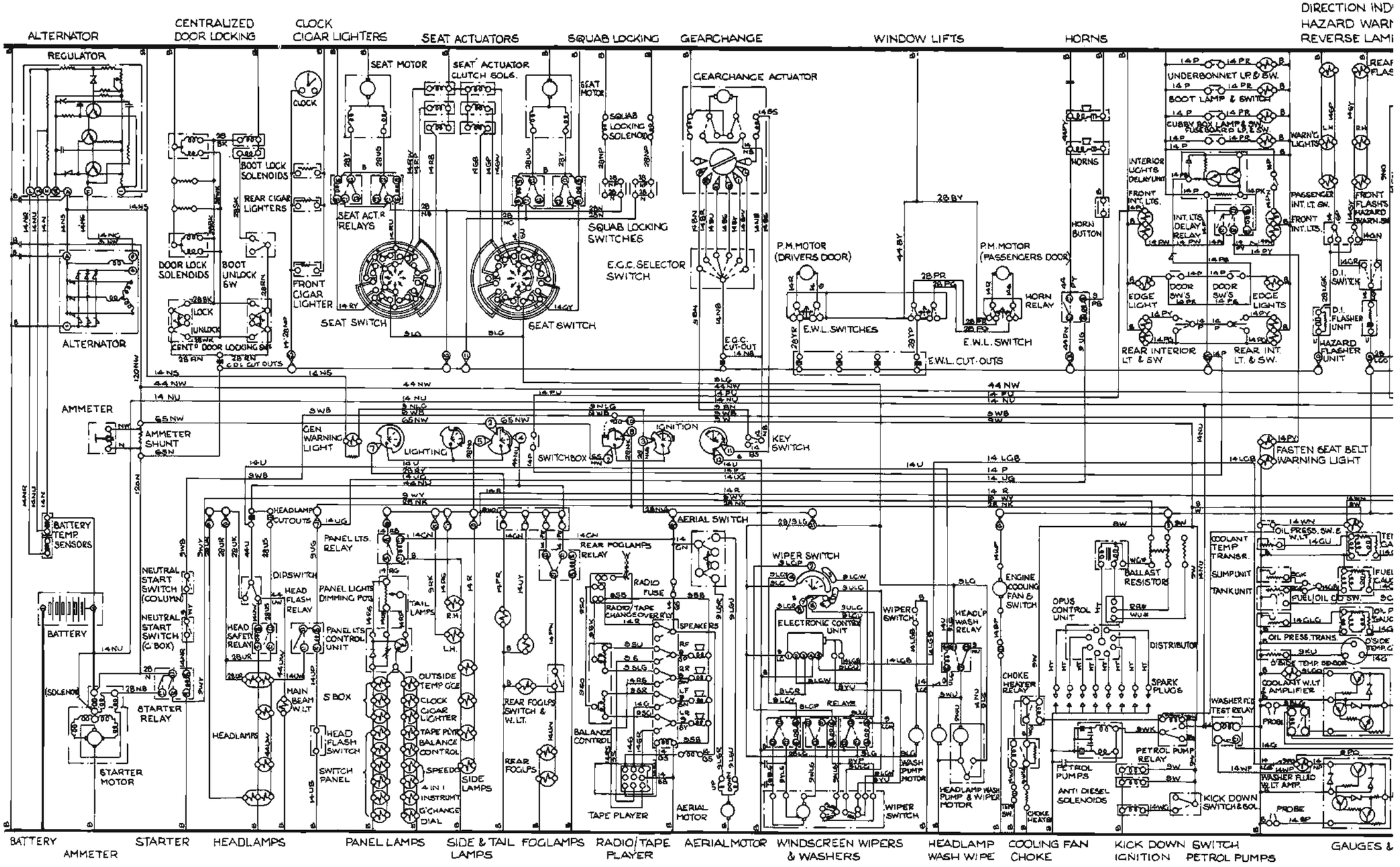

*** SEE MODIFICATION 1**

DIRECTION INDICATORS
HAZARD WARNING
REVERSE LAMPS

STOPLAMPS
SPEED CONTROL*

REAR WINDOW
DEMISTER

AUTOMATIC AIR CONDITIONING UNIT

CKING

GEARCHANGE

GEARCHANGE ACTUATOR

LOCKING
HES

C. SELECTOR
ITCH

WINDOW LIFTS

P.M. MOTOR (DRIVERS DOOR)

P.M. MOTOR (PASSENGERS DOOR)

E.W.L. SWITCHES

E.W.L. SWITCH

E.W.L. CUT-OUTS

E.C.C. CUT-OUT

HORNS

HORNS

HORN BUTTON

HORN RELAY

INTERIOR LIGHTS DELAY UNIT

FRONT INT. LTS.

INT. LTS. DELAY RELAY

UNDERBONNET LP & SW.

BOOT LAMP & SWITCH

CUBBY BOX LAMP & SW.

FUSEBOARD LP. & SW.

DOOR SW'S

EDGE LIGHT

EDGE LIGHTS

REAR INTERIOR LT. & SW.

REAR INT. LT. & SW.

REAR FLASHERS

WARN'G LIGHTS

PASSENGER INT. LT. SW.

FRONT INT. LTS.

FRONT FLASH'S HAZARD WARN. SW.

D.I. SWITCH

D.I. FLASHER UNIT

HAZARD FLASHER UNIT

STOPLPS

STOPLAMPS FAILURE RELAY

STOPLAMPS SWITCH

REVERSE LAMP & SW.

REAR WINDOW DEMISTER

HEIGHT CONTROL SOL. SWITCH

SPEED CONTROL SWITCH

SPEED CONTROL RELAY

ELECTRONIC CONTROL UNIT

THROTTLE CONTROL SOL. VALVE

AUTO A.C.U. SELECTOR SW.

REAR WINDOW DEMISTER RELAY

AMBIENT

SALOON

UPPER TEMP. SELECTOR

UPPER AIR SENS. TOP ROLL

AMBIENT

LOWER TEMP. SELECTOR

LOWER AIR SENSOR

FAN SPEED POT.

SERVO MOTOR

FLAP POSN POT.

UPPER SERVO MODULE

FAN DELAY THERM

LOWER QUANT. FLAP SWITCH

FAN DELAY RELAY

UPPER MODE CHANGE ACTR.

SCREEN

FACIA

LOWER QUANT RELAY

LOWER QUANT. ACTR.

OPEN

CLOSED

RECIRC

FRESH

RECIRC RELAY

RECIRC ACTRS

FAN SPEED POT.

SERVO MOTOR

FLAP POSN POT.

LOWER SERVO MODULE

IGNITION

KEY SWITCH

AERIAL SWITCH

RADIO FUSE

TAPE / RADIO

SPEAKERS

AERIAL MOTOR

WIPER SWITCH

ELECTRONIC CONTROL UNIT

WIPER SWITCH

RELAYS

WASH PUMP MOTOR

WIPER SWITCH

HEADLP WASH RELAY

HEADLAMP WASH PUMP & WIPER MOTOR

ENGINE COOLING FAN & SWITCH

CHOKE HEATER RELAY

CHOKE HEATER

OPUS CONTROL UNIT

BALLAST RESISTOR

DISTRIBUTOR

SPARK PLUGS

PETROL PUMPS

ANTI DIESEL SOLENOIDS

PETROL PUMP RELAY

KICK DOWN SWITCH & SOL.

FASTEN SEAT BELT WARNING LIGHT

COOLANT TEMP. TRANSR.

SUMP UNIT

TANK UNIT

WASHER FLD. TEST RELAY

OIL PRESS. SW. & W.LT.

TEMP. GAUGE

FUEL/OIL GAUGE

FUEL/OIL GD SW.

OIL PRESS GAUGE

OIL PRESS. TRANS.

O'SIDE TEMP. GDGE

O'SIDE TEMP SENSOR

COOLANT W.LT. AMPLIFIER

PROBE

WASHER FLUID W.LT AMP.

PROBE

FAN & COMP FUSE

PARKING BRAKE

STOPLAMP FAILURE

BRAKE PRESSURE

BRAKE PRESSURE

BRAKE FLUID

ENGINE OVERHEAT

ENGINE OVERH'T BUZZER

LOW FUEL

WARN. LT. DIMMING RELAY

ICE WARN. LT.

ICE SENSOR

WARNING LIGHT TEST RELAY

ICE WARNING AMP.

SPEEDO

SPEED GENERATOR

PETROL FILLER DOOR SOL. & SW.

FAN & COMP. RELAY

TEMP. PRESSOSTAT SENSOR

THERMOSTAT

COMPR. CLUTCH

COMPR. PROT'N UNIT

SERVO ISOLATION RELAY

FAN SWITCH OFF RELAY

VOLTAGE STABILISER

FAN SPEED MODULE

FAN SPEED POWER CIRCUIT

* 14YB - FIT RED IDENTIFICN. SLEEVE

LOW IMPEDANCE EARTH

FAN MOTORS

IO/TAPE AYER

AERIAL MOTOR

WINDSCREEN WIPERS & WASHERS

HEADLAMP WASH WIPE

COOLING FAN CHOKE

KICK DOWN SWITCH IGNITION

PETROL PUMPS

GAUGES & WARNING LIGHTS

ELECTRONIC SPEEDO

PETROL FILLER DOOR

SERVO TEST POINTS MARKED THUS

Theoretical wiring diagram
Sheet 8

Rolls-Royce Corniche Convertible
Bentley Corniche Convertible

Left-hand drive cars for countries other than USA and Canada from car serial number 30 001

This document is the property of Rolls-Royce Motors Limited and may not be copied or communicated to a third party or used for any purpose other than that for which it is supplied without the express written authority of Rolls-Royce Motors Limited.

Whilst the information in this document is given in good faith based upon the latest knowledge available to Rolls-Royce Motors Limited, Rolls-Royce Motors Limited gives no warranty or representation concerning such information, and such information must not be taken as establishing any contractual or other commitment on the part of Rolls-Royce Motors Limited.

© Rolls-Royce Motors Limited 1977

S 235

Printed in England

February 1977

T.&D. 4200

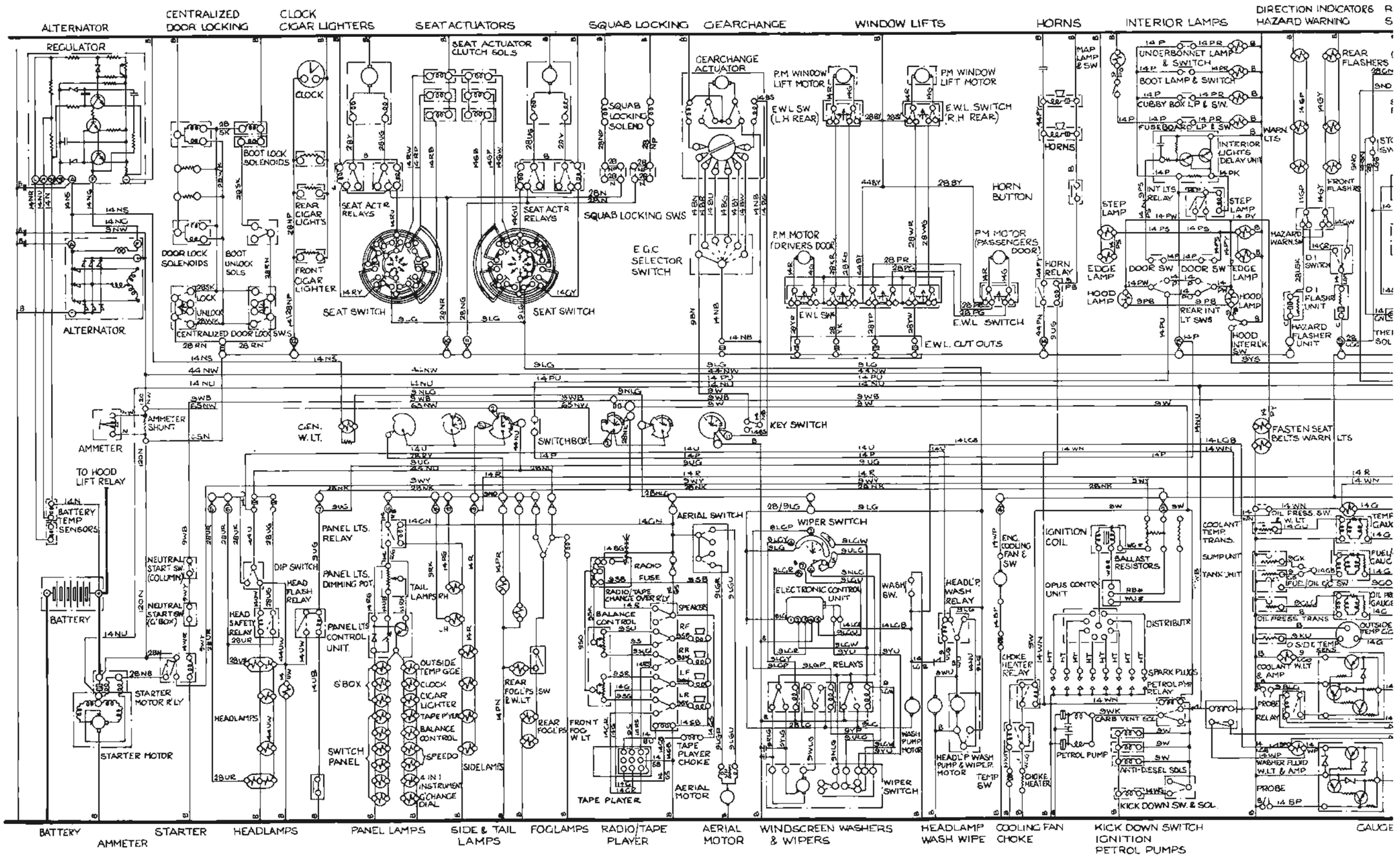

* SEE MODIFICATION 1

3 LOCKING | GEARCHANGE | WINDOW LIFTS | HORNS | INTERIOR LAMPS | DIRECTION INDICATORS HAZARD WARNING | STOPLAMPS REVERSE LAMPS SPEED CONTROL * | HOOD LIFT UNIT | AUTOMATIC AIR CONDITIONING UNIT

GEARCHANGE ACTUATOR
P.M. WINDOW LIFT MOTOR
E.W.L.SW (L.H REAR)
P.M. WINDOW LIFT MOTOR
E.W.L SWITCH (R.H REAR)
HORNS
MAP LAMP & SW
HORN BUTTON
UNDERBONNET LAMP & SWITCH
BOOT LAMP & SWITCH
CUBBY BOX LP & SW.
FUSEBOARD LP & SW.
INTERIOR LIGHTS DELAY UNIT
INT LTS RELAY
STEP LAMP
EDGE LAMP
HOOD LAMP
DOOR SW.
DOOR SW
REAR INT LT SWS
HOOD INTERLK SW
WARN. LTS
REAR FLASHERS
FRONT FLASHERS
HAZARD WARN SW
D.I. SWITCH
D.I. FLASHER UNIT
HAZARD FLASHER UNIT
STOPLPS
STOPLPS FAILURE RLY
STOPLAMPS SWITCH
REVERSE LP & SW
HOOD LIFT SWITCH
HEIGHT CONT SOL & SW
SPEED CONTROL SWITCH
SPEED CONT. RELAY
ELECTRONIC CONTROL UNIT
THERM CONT SOL VALVE
HOOD LIFT MOTOR
HOOD LIFT RELAY
AUTO ACU SELECTR SW
PARK MICRO SWITCH
TO BATTERY
AMBIENT
SALOON
UPPER AIR SENSORS
LOWER AIR SENSORS
TOP ROLL
HOOD DOWN TEMP RELAY
UPPER TEMP SELECTOR
LOWER TEMP SELECTOR
FAN DELAY THERMOSTAT
LOWER QUANTITY FLAP SWITCH
FAN DELAY RELAY
UPPER MODE CHANGE ACTR
SCREEN
FACIA
FAN SPEED POT
SERVO MOTOR
FLAP POSN POT
UPPER SERVO MODULE
LOWER SERVO MODULE
LOWER RECIRC RELAY
LOWER QUANT. ACT
OPEN
CLOSED
RECIRC RELAY
RECIRC ACTUATR
E.G.C SELECTOR SWITCH
P.M. MOTOR (DRIVERS DOOR)
P.M. MOTOR (PASSENGERS DOOR)
E.W.L. SWITCH
E.W.L. CUT OUTS
HORN RELAY
KEY SWITCH
FASTEN SEAT BELTS WARN. LTS
FAN & COMP FUSE
PETROL FILLER DOOR SOL & SW
FAN & COND RELAY
SERVO ISOLATION RELAY
COMP AMB THERM
COMPR PROT*N LIMIT
COMPR CLUTCH
FAN SWITCH OFF RELAY
VOLTAGE STABILISER
* 14 YB-FIT RED IDENTIFICATION SLEEVE
FAN MOTORS
FAN SPEED MODULE
FAN SPEED POWER CIRC. LOW IMPEDANCE EARTH

AERIAL SWITCH
WIPER SWITCH
ELECTRONIC CONTROL UNIT
WASH SW.
WASH PUMP MOTOR
RELAYS
WIPER SWITCH
HEADL'P WASH RELAY
HEADL'P WASH PUMP & WIPER MOTOR
TEMP SW
ENG COOLING FAN & SW.
CHOKE HEATER ASY
CHOKE HEATER
IGNITION COIL
OPUS CONTR UNIT
BALLAST RESISTORS
DISTRIBUTR
SPARK PLUGS
PETROL PUMP RELAY
CARB VENT SOL
PETROL PUMP
ANTI-DIESEL SOLS
KICK DOWN SW. & SOL
COOLANT TEMP TRANS
SUMP UNIT
TANK UNIT
OIL FRESS. SW
TEMP GAUGE
FUEL/OIL GAUGE
OIL PRESS TRANS
OUTSIDE TEMP GAUGE
SIDE TEMP
COOLANT W.LT & AMP
PROBE
RELAY
WARNER FLUID W.LT & AMP
PARKING BRAKE
STOP L'P FAILURE
BRAKE PRESSURE
BRAKE P'R
ENG. OVERHEAT
ENGINE OVERHT BUZZER
LOW FUEL
ICE WARN LT
ICE SENSOR
WARNING LT. TEST RELAY
ICE WARNING AMP
WARN. LT. DIP RELAY
SPEEDO
SPEED GENERATOR

RADIO FUSE
TAPE OVER RLY
SPEAKERS
RF
RR
LF
LR
TAPE PLAYER CHOKE
AERIAL MOTOR

O/TAPE PLAYER | AERIAL MOTOR | WINDSCREEN WASHERS & WIPERS | HEADLAMP WASH WIPE | COOLING FAN CHOKE | KICK DOWN SWITCH IGNITION PETROL PUMPS | GAUGES & WARNING LIGHTS | ELECTRONIC SPEEDOMETER | PETROL FILLER DOOR | FAN SPEED | COMPRESSOR PROTECTION UNIT

TEST POINTS MARKED THUS

Theoretical wiring diagram
Sheet 9

Rolls-Royce Corniche Saloon
Bentley Corniche Saloon

Left-hand drive cars for countries other than USA and Canada from car serial number 30 001

This document is the property of Rolls-Royce Motors Limited and may not be copied or communicated to a third party or used for any purpose other than that for which it is supplied without the express written authority of Rolls-Royce Motors Limited.

Whilst the information in this document is given in good faith based upon the latest knowledge available to Rolls-Royce Motors Limited, Rolls-Royce Motors Limited gives no warranty or representation concerning such information, and such information must not be taken as establishing any contractual or other commitment on the part of Rolls-Royce Motors Limited.

S 236

Printed in England

© Rolls-Royce Motors Limited 1977

February 1977

T.S.D. 4200

ALTERNATOR

CENTRALIZED DOOR LOCKING

CLOCK CIGAR LIGHTERS

SEAT ACTUATORS

SQUAB LOCKING

GEARCHANGE

WINDOW LIFTS

HORNS

DIRECTION INDICATO
HAZARD WARNING S
REVERSE LAMPS S

REGULATOR

ALTERNATOR

BATTERY TEMP SENSOR

BATTERY

(SOLENOID)

STARTER RELAY

STARTER MOTOR

AMMETER

AMMETER SHUNT

65 N

65 NW

120 NW

120 N

14 NS

44 NW

14 NU

14 PU

9 WB

9 W

14 U

14 NR

14 NU

14 N

14 NG

9 NW

28 BK

28 BN

28 NP

28 BR

28 N

28 BK LOCK

28 WK UNLOCK

CENTRALIZED DOOR LOCK SW.

BOOT LOCK SOLENOIDS

REAR CIGAR LIGHTERS

DOOR LOCK SOLENOIDS

BOOT UNLOCK SWITCH

FRONT CIGAR LIGHTER

CLOCK

SEAT MOTOR

SEAT ACTUATOR CLUTCH SOLS.

SEAT ACTR RELAYS

SEAT SWITCH

SEAT SWITCH

SEAT MOTOR

SQUAB LOCKING SOLENOID

SQUAB LOCKING SWITCHES

GEARCHANGE ACTUATOR

E.G.C. SELECTOR SWITCH

E.G.C. CUT-OUT

P.M. MOTOR (DRIVERS DOOR

E.W.L. SWITCHES

P.M. MOTOR (PASSENGERS DOOR)

E.W.L. SWITCH

E.W.L. CUT OUTS

HORNS

HORN BUTTON

HORN RELAY

UNDERBONNET LAMP SWITCH

BOOT LAMP & SW

CUBBY BOX LP & SW. FUSEBOARD LP. & SWITCH

WARN'G LIGHTS

INTERIOR LIGHTS DELAY UNIT

FRONT INT LTS

INT LTS DELAY RELAY

PASS'R INT LT SW

EDGE LIGHT

DOOR SWITCH

DOOR SWITCHES

EDGE LIGHTS

REAR INT. LT & SW.

REAR INTERIOR LIGHT & SW.

REAR FLASHERS

FRONT FLASHERS

FRONT INT. LTS

HAZ. WARN SW.

D.I. SWITCH

D.I. FLASHER UNIT

HAZARD FLASHER UNIT

KEY SWITCH

IGNITION

LIGHTING

SWITCHBOX

GEN WARNING LIGHT

FASTEN SEAT BELT WARNING LIGHT

BATTERY

NEUTRAL START SWITCH (COLUMN)

NEUTRAL START SWITCH (G'BOX)

HEAD SAFETY RELAY

HEADLAMPS

DIP SWITCH

HEAD FLASH RELAY

MAIN BEAM W.L.T.

HEAD FLASH SWITCH

SWITCH PANEL

HEAD'P CUT-OUTS

PANEL LIGHTS RELAY

PANEL LTS DIMMING POT.

PANEL LIGHTS CONTROL UNIT

S' BOX

TAIL LAMPS

R.H.

L.H.

NO. PLATE LAMPS

OUTSIDE TEMP G'GE

CLOCK

CIGAR LIGHTER

TAPE PL'YR

BALANCE CONTROL

SPEEDO

4 IN 1 INSTRUM'T G'CHANGE DIAL

SIDE LAMPS

FRONT FOGLPS

REAR FOGLPS SW. & W.L.T.

REAR FOGLPS RELAY

REAR FOGLAMPS

AERIAL SWITCH

AERIAL MOTOR

RADIO

FUSE 35P

RADIO/TAPE CHANGE OVER

SPEAKERS

BALANCE CONTROL

TAPE PLAYER FILTER

TAPE PLAYER

WIPER SWITCH

ELECTRONIC CONTROL UNIT

RELAYS

WIPER MOTOR

WASH PUMP MOTOR

WIPER SWITCH

HEADL'P WASH RELAY

HEADLAMP WASH PUMP & WIPER MOTOR

ENGINE COOLING FAN E. SWITCH

CHOKE HEATER RELAY

CHOKE HEATER

DISTRIBUTOR

BALLAST RESISTORS OPUS CONT. UNIT

SPARK PLUGS

PETROL PUMPS

CARB VENT SOL.

ANTI-DIESEL SOLENOIDS

PETROL PUMP RELAY

WASHER FLUID TEST RELAY

KICK DOWN SWITCH & SOL.

COOLANT TEMP. TRANS'R

TEMP GAUGE

OIL PRESS SW & W.L.T.

FUEL/OIL G'G SWITCH

SUMP UNIT

TANK UNIT

FUEL/OIL GAUGE

OIL PRESS. TRANS'R

OIL PRESS. GAUGE

OUTSIDE TEMP SENSOR

OUTSIDE TEMP G'GE

COOLANT W.L.T & AMP.

PROBE

WASHER FLUID W.L.T & AMP.

PROBE

BATTERY
AMMETER

STARTER

HEADLAMPS

PANEL LAMPS

SIDE & TAIL LAMPS

FOGLAMPS

RADIO/TAPE PLAYER

AERIAL MOTOR

WINDSCREEN WIPERS & WASHERS

HEADLAMP WASH WIPE

COOLING FAN CHOKE

KICK DOWN SWITCH
IGNITION PETROL PUMPS

GAUGES & W

* SEE MODIFICATION 1

IG GEARCHANGE | WINDOW LIFTS | HORNS | DIRECTION INDICATORS HAZARD WARNING REVERSE LAMPS | STOPLAMPS SPEED CONTROL* | REAR WINDOW DEMISTER | AUTOMATIC AIR CONDITIONING UNIT

GEARCHANGE ACTUATOR
P.M. MOTOR (DRIVERS DOOR)
P.M. MOTOR (PASSENGERS DOOR)
E.W.L. SWITCHES
E.W.L. SWITCH
E.W.L. CUT OUTS
E.G.C. CUT-OUT
KEY SWITCH
IGNITION
AERIAL SWITCH
AERIAL MOTOR
WIPER SWITCH
ELECTRONIC CONTROL UNIT
RELAYS
WIPER SWITCH
WIPER MOTOR
TAPE PLAYER FILTER
SPEAKERS
FUSE BOX
HORNS
HORN BUTTON
HORN RELAY
HEADLP WASH RELAY
HEADLAMP WASH PUMP & WIPER MOTOR
UNDERBONNET LAMP & SWITCH
BOOT LAMP & SW
CUBBY BOX L.P. & SW.
FUSEBOARD L.P. & SWITCH
INTERIOR LIGHTS DELAY UNIT
FRONT INT. LTS
INT LTS DELAY RELAY
DOOR SWITCHES
EDGE LIGHTS
REAR INT LT. & SW
REAR INTERIOR LIGHT & SW.
WARN'G LIGHTS
PASS'RS INT LT SW.
REAR FLASHERS
FRONT FLASHERS
FRONT INT. LTS.
HAZ WARN SW
D.I. SWITCH
D.I. FLASHER UNIT
HAZARD FLASHER UNIT
STOPLPS
STOPLAMPS FAILURE RLY
STOPLAMPS SWITCH
REVERSE LAMP & SW
HEIGHT CONTROL SOL & SW.
SPEED CONTROL SWITCH
SPEED CONTROL RELAY
ELECTRONIC CONTROL UNIT
THROTTLE CONT SOL VALVE
REAR WINDOW DEMISTR
REAR WINDOW DEMISTER RELAY
AUTO A.C.U. SELECTOR SW.
UPPER AIR SENSOR
AMBIENT
LOWER AIR SENSOR
TOP ROLL
UPPER TEMP. SELECTOR
LOWER TEMP. SELECTOR
SERVO MOTOR
FLAP POT.
UPPER SERVO MODULE
FAN SPEED POT.
LOWER SERVO MODULE
FAN DELAY THERMOT
FAN DELAY RELAY
LOWER QUANT. FLAP SWITCH
UPPER MODE CHANGE ACTR
SCREEN
FACIA
LOWER QUANT. RELAY
LOWER QUANT ACTR
OPEN
CLOSED
FRESH LH
RECIRC
FRESH RH
RECIRC
RECIRC RELAY
RECIRC ACTRS
FASTEN SEAT BELT WARNING LIGHT
ENGINE COOLING FAN & SWITCH
DISTRIBUTOR
BALLAST RESISTORS OPUS CONT. UNIT
SPARK PLUGS
PETROL PUMP RELAY WASHER FLUID TEST RELAY
CHOKE HEATER RELAY
CHOKE HEATER
PETROL PUMPS
CARB VENT SOL
ANTI-DIESEL SOLENOIDS
KICK DOWN SWITCH & SOL.
COOLANT TEMP. TRANS'R
SUMP UNIT
TANK UNIT
OIL PRESS TRANS'R
OUTSIDE TEMP SENSOR
OIL PRESS SW & W.L.T.
TEMP GAUGE
FUEL/OIL G.O. SWITCH
FUEL/OIL GAUGE
OIL PRESS GAUGE
OUTSIDE TEMP GAUGE
COOLANT W.L.T. & AMP.
WASHER FLUID W.L.T. & AMP
PROBE
PARKING BRAKE STOPL'P FAILURE
BRAKE PRESSURE
BRAKE FLUID
ENG. OVERHEAT
ENGINE OVERHT BUZZER
LOW FUEL
WARN LT DIMMING RELAY
ICE WARN. LIGHT
ICE SENSOR
WARN LT TEST RELAY
ICE WARNING AMP.
SPEEDO
SPEED GENERATOR
FAN & COMP. FUSE
PETROL FILLER DOOR SOL & SW
FAN & COMPR. RELAY
TEMP PRESS SENSOR
COMP THERM
COMPR PROTN UNIT
COMPR CLUTCH
SERVO ISOLATN RELAY
FAN SWITCH OFF RELAY
VOLTAGE STABILISER
* 14YB FIT RED IDENTIFN SLEEVE
FAN MOTORS
FAN SPEED MODULE
FAN SPEED POWER CIRCUIT
SERVO TEST POINTS MARKED THUS

AERIAL MOTOR WINDSCREEN WIPERS & WASHERS | HEADLAMP WASH WIPE | COOLING FAN CHOKE | KICK DOWN SWITCH IGNITION PETROL PUMPS | GAUGES & WARNING LIGHTS | ELECTRONIC SPEEDO | PETROL FILLER DOOR

Theoretical wiring diagram
Sheet 10

Rolls-Royce Corniche Convertible
Bentley Corniche Convertible

Left-hand drive cars for USA and Canada
from car serial number 30 001

This document is the property of Rolls-Royce Motors Limited and may not be copied or communicated to a third party or used for any purpose other than that for which it is supplied without the express written authority of Rolls-Royce Motors Limited.

Whilst the information in this document is given in good faith based upon the latest knowledge available to Rolls-Royce Motors Limited, Rolls-Royce Motors Limited gives no warranty or representation concerning such information, and such information must not be taken as establishing any contractual or other commitment on the part of Rolls-Royce Motors Limited.

S 237

© Rolls-Royce Motors Limited 1977

Printed in England

February 1977

T.S.D. 4200

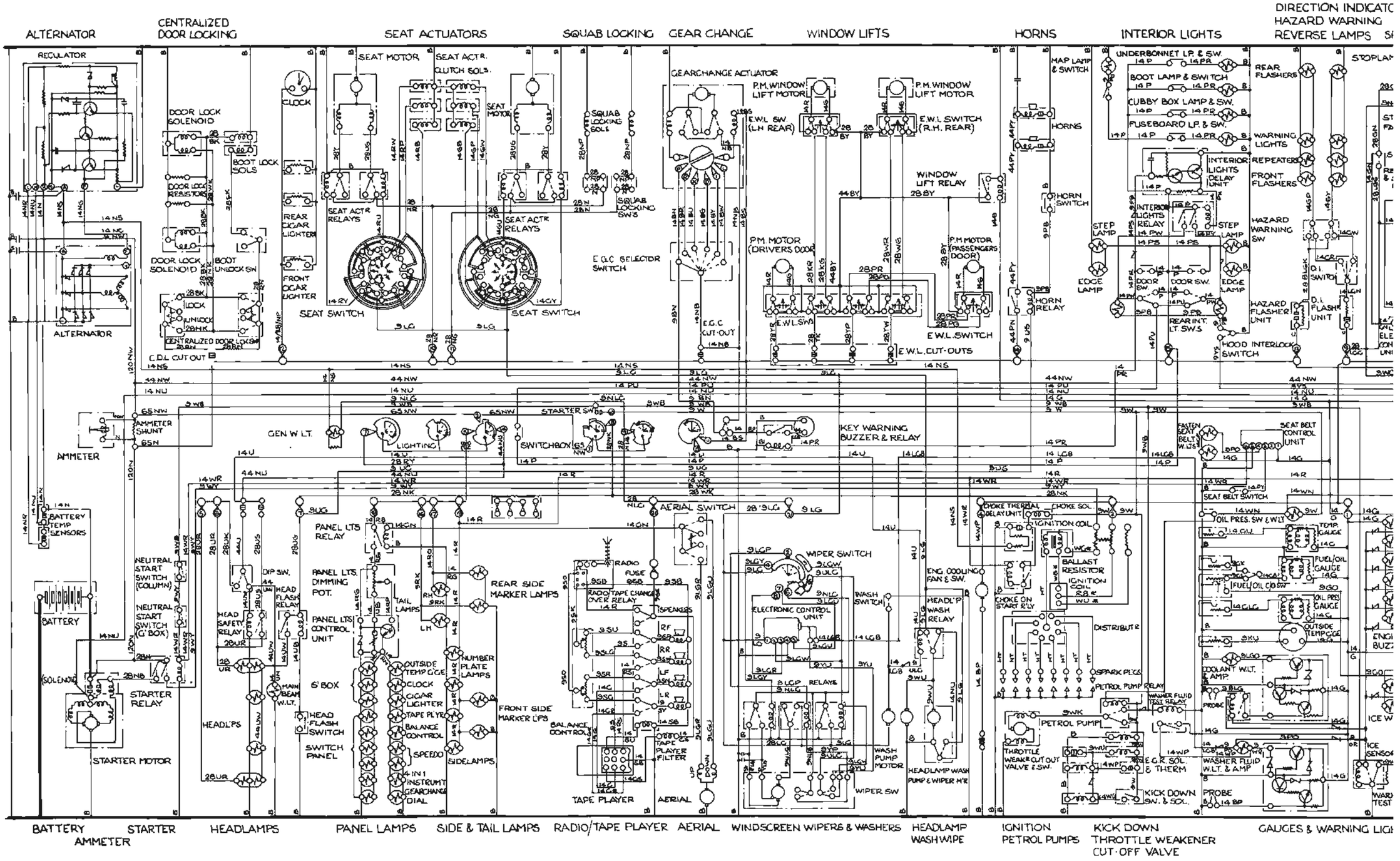

* SEE MODIFICATION 1

GEAR CHANGE | WINDOW LIFTS | HORNS | INTERIOR LIGHTS | DIRECTION INDICATORS HAZARD WARNING STOPLAMPS REVERSE LAMPS SPEED CONTROL * | HOOD LIFT | AUTOMATIC AIR CONDITIONING UNIT

GEARCHANGE ACTUATOR
P.M. WINDOW LIFT MOTOR
E.W.L. SW (L.H. REAR)
P.M. WINDOW LIFT MOTOR
E.W.L. SWITCH (R.H. REAR)
WINDOW LIFT RELAY
P.M. MOTOR (DRIVERS DOOR)
P.M. MOTOR (PASSENGERS DOOR)
E.W.L. SWS
E.W.L. SWITCH
E.W.L. CUT-OUTS
E.D.C. CUT-OUT
KEY WARNING BUZZER & RELAY
MAP LAMP & SWITCH
HORNS
HORN SWITCH
HORN RELAY
UNDERBONNET LP. & SW.
BOOT LAMP & SWITCH
CUBBY BOX LAMP & SW.
FUSEBOARD LP. & SW.
INTERIOR LIGHTS DELAY UNIT
INTERIOR LIGHTS RELAY
DOOR SW.
DOOR SW.
STEP LAMP
STEP LAMP
EDGE LAMP
EDGE LAMP
REAR INT. LT. SW.S
HOOD INTERLOCK SWITCH
REAR FLASHERS
WARNING LIGHTS
REPEATERS
FRONT FLASHERS
HAZARD WARNING SW
HAZARD FLASHER UNIT
D.I. SWITCH
D.I. FLASH UNIT
STOPLAMPS
STOPLAMPS FAILURE RELAY
STOPLAMPS SW.
REVERSE LP. & SW.
HT. CONTROL SOL & SW.
PARK MICRO SWITCH
SPEED CONTROL SW.
SPEED CONTROL RELAY
ELECTRONIC CONTROL UNIT
THROTT. CONT. SOL. VALVE
HOOD LIFT MOTOR
AUTO A.C. SELECTOR SW.
AMBIENT
SALOON
UPPER AIR SENSORS
TOP ROLL
HOOD DOWN TEMP RELAY
UPPER TEMP. SELECTOR
LOWER AIR SENSORS
LOWER TEMP SELECTOR
FAN DELAY THERMOSTAT
LOWER QUANT. FLAP SWITCH
FAN DELAY RELAY
UPPER MODE CHANGE ACTR
SCREEN
FACIA
FAN SPEED POT
SERVO MOTOR
FLAP POS. POT
UPPER SERVO MODULE
LOWER QUANTITY RELAY
LOWER QUANT ACTR
OPEN
CLOSED
FRESH LH
RECIRC
FRESH RH
RECIRC
RECIRC RELAY
RECIRC ACTUATORS
FAN SPEED POT
SERVO MOTOR
COLD UNIT
FLAP POS. POT
LOWER SERVO MODULE
FAN COMP FUSE
PETROL FILLER DOOR SOL. & SW.
FAN & COMP. RELAY
TEMP. PRESS. SENSOR
COMP. AMB. THERM.
COMP. PROTEC. UNIT
COMP. CLUTCH
SERVO ISOLATION RELAY
FAN SWITCH OFF RELAY
VOLTAGE STABILISER
*14YB - FIT RED IDENTIFICATION SLEEVE
FAN MOTOR
FAN SPEED MODULE
FAN SPEED POWER CIRC.

AERIAL SWITCH
WIPER SWITCH
ELECTRONIC CONTROL UNIT
WASH SWITCH
RELAYS
WASH PUMP MOTOR
WIPER SW
HEADLAMP WASH RELAY
HEADLAMP WASH PUMP & WIPER M'R
ENG. COOLING FAN E. SW.
CHOKE THERMAL DELAY UNIT
CHOKE SOL.
IGNITION COIL
BALLAST RESISTOR
CHOKE ON START RLY
DISTRIBUTOR
SPARK PLUGS
PETROL PUMP RELAY
PETROL PUMP
THROTTLE WEAKR CUT OUT VALVE & SW.
E.G.R. SOL. & THERM.
KICK DOWN SW. & SOL.
WASHER FLUID TEST RELAY
SEAT BELT CONTROL UNIT
FASTEN SEAT BELT W.L.T.
SEAT BELT SWITCH
OIL PRES. SW. & W.L.T.
TEMP. GAUGE
FUEL/OIL GAUGE
FUEL/OIL C.D. SW.
OIL PRES. GAUGE
OUTSIDE TEMP. GAUGE
COOLANT W.L.T. & AMP.
PROBE
WASHER FLUID W.L.T. & AMP.
PROBE
PARK BRAKE
STOPLPS FAILURE
BRAKE PRESSURE
BRAKE PRESSURE
BRAKE FLUID
ENG. OVERHEAT
ENGINE OVERHT BUZZER
LOW FUEL
WARN. LT. DIM. RELAY
ICE W.L.T.
ICE SENSOR
WARN. LTS TEST RELAY
ICE WARNING AMP.
SPEEDO
SPEED GENERATOR

AERIAL | WINDSCREEN WIPERS & WASHERS | HEADLAMP WASH WIPE | IGNITION PETROL PUMPS | KICK DOWN THROTTLE WEAKENER CUT-OFF VALVE | GAUGES & WARNING LIGHTS | ELECTRONIC SPEEDOMETER | PETROL FILLER DOOR FAN SPEED

Ⓣ TEST POINTS MARKED THUS

Theoretical wiring diagram
Sheet 11

Rolls-Royce Corniche Saloon
Bentley Corniche Saloon

Left-hand drive cars for USA and Canada
from car serial number 30 001

This document is the property of Rolls-Royce Motors Limited and may not be copied or communicated to a third party or used for any purpose other than that for which it is supplied without the express written authority of Rolls-Royce Motors Limited.

Whilst the information in this document is given in good faith based upon the latest knowledge available to Rolls-Royce Motors Limited, Rolls-Royce Motors Limited gives no warranty or representation concerning such information, and such information must not be taken as establishing any contractual or other commitment on the part of Rolls-Royce Motors Limited.

S 236

Printed in England

© Rolls-Royce Motors Limited 1977

February 1977

T.S.D. 4200

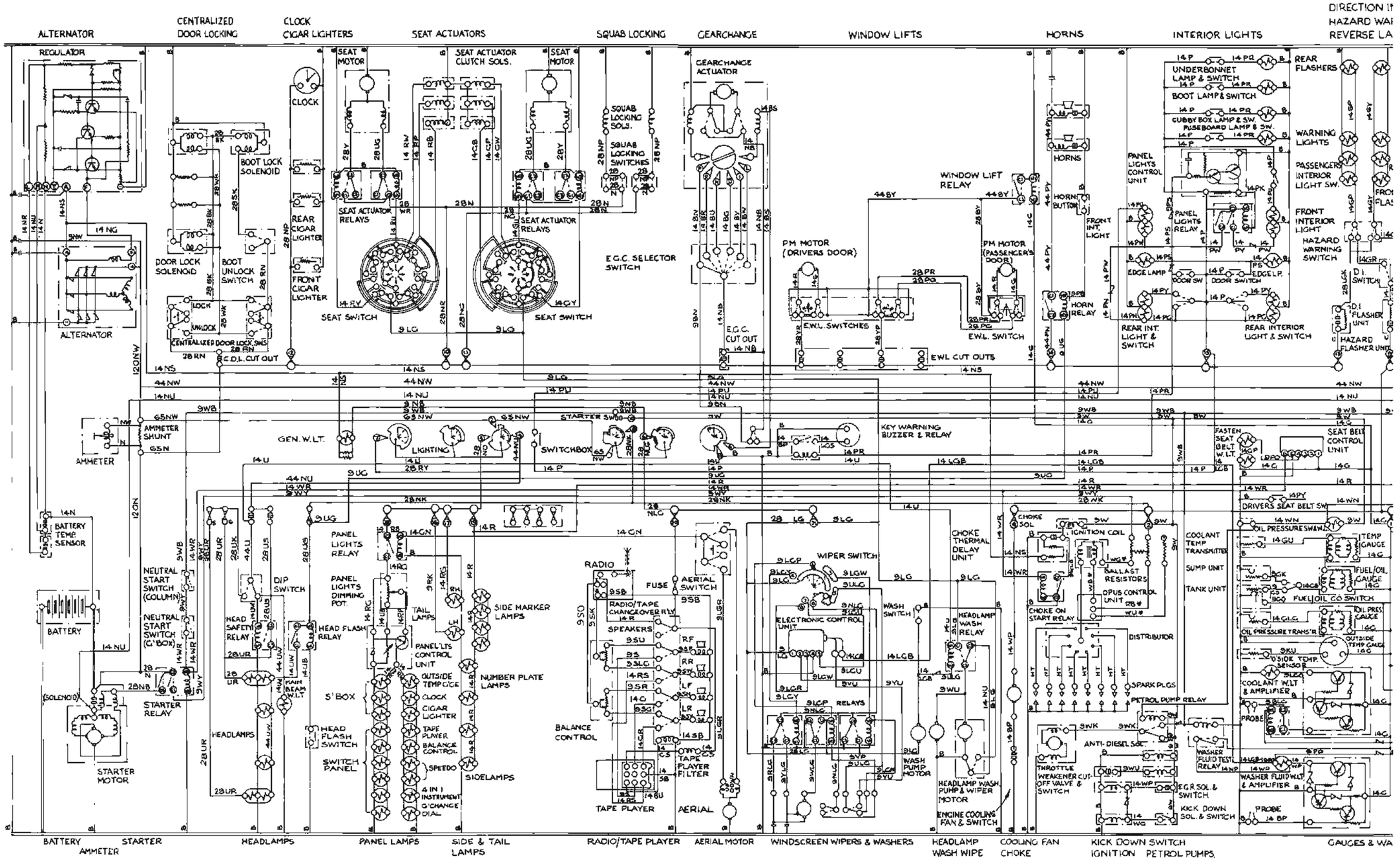

* SEE MODIFICATION 1

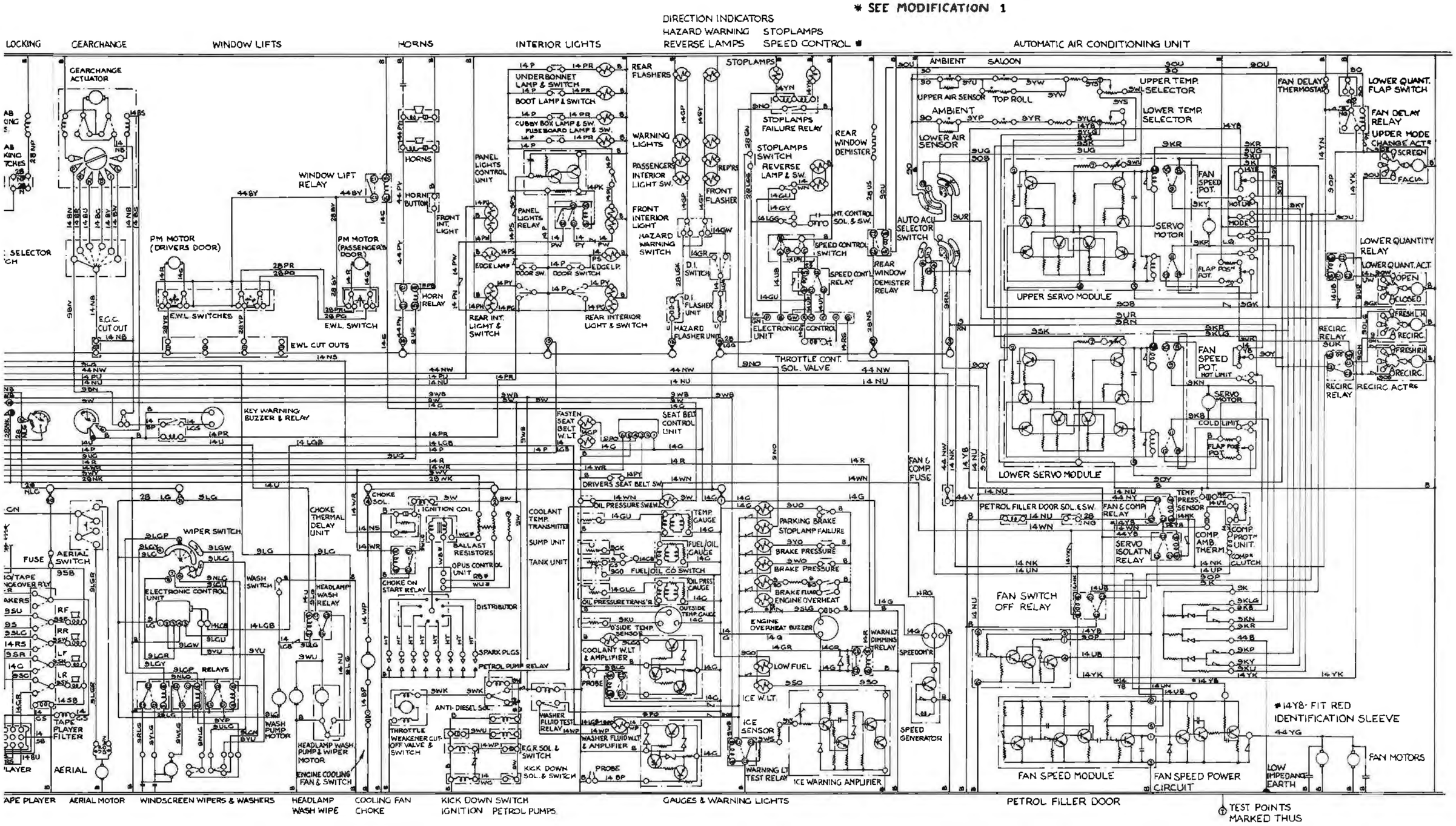

Theoretical wiring diagram
Sheet 12

Rolls-Royce Camargue

Right-hand drive cars from
car serial number 30 001

This document is the property of Rolls-Royce Motors Limited and may not be copied or communicated to a third party or used for any purpose other than that for which it is supplied without the express written authority of Rolls-Royce Motors Limited.

Whilst the information in this document is given in good faith based upon the latest knowledge available to Rolls-Royce Motors Limited, Rolls-Royce Motors Limited gives no warranty or representation concerning such information, and such information must not be taken as establishing any contractual or other commitment on the part of Rolls-Royce Motors Limited.

 © Rolls-Royce Motors Limited 1978

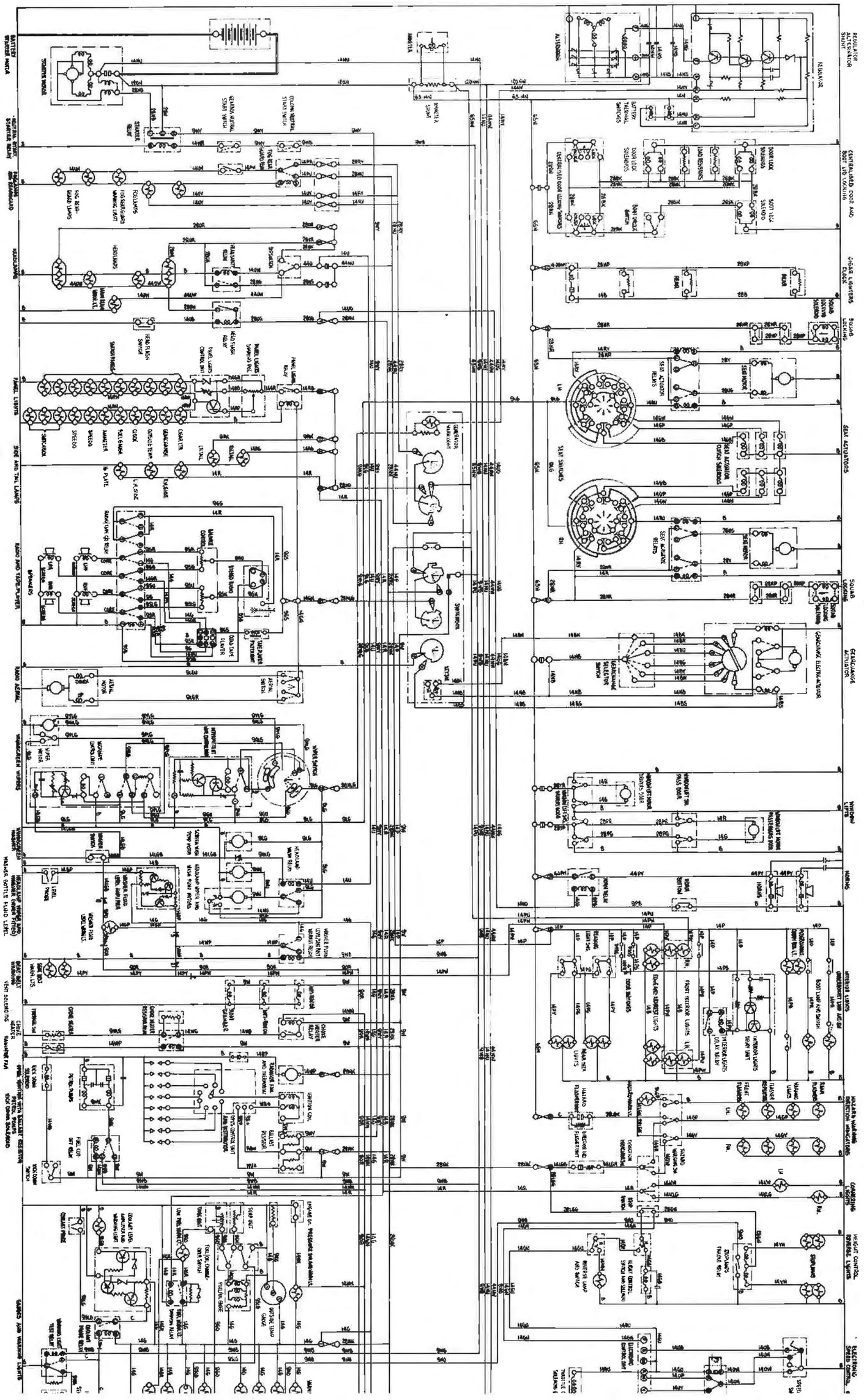

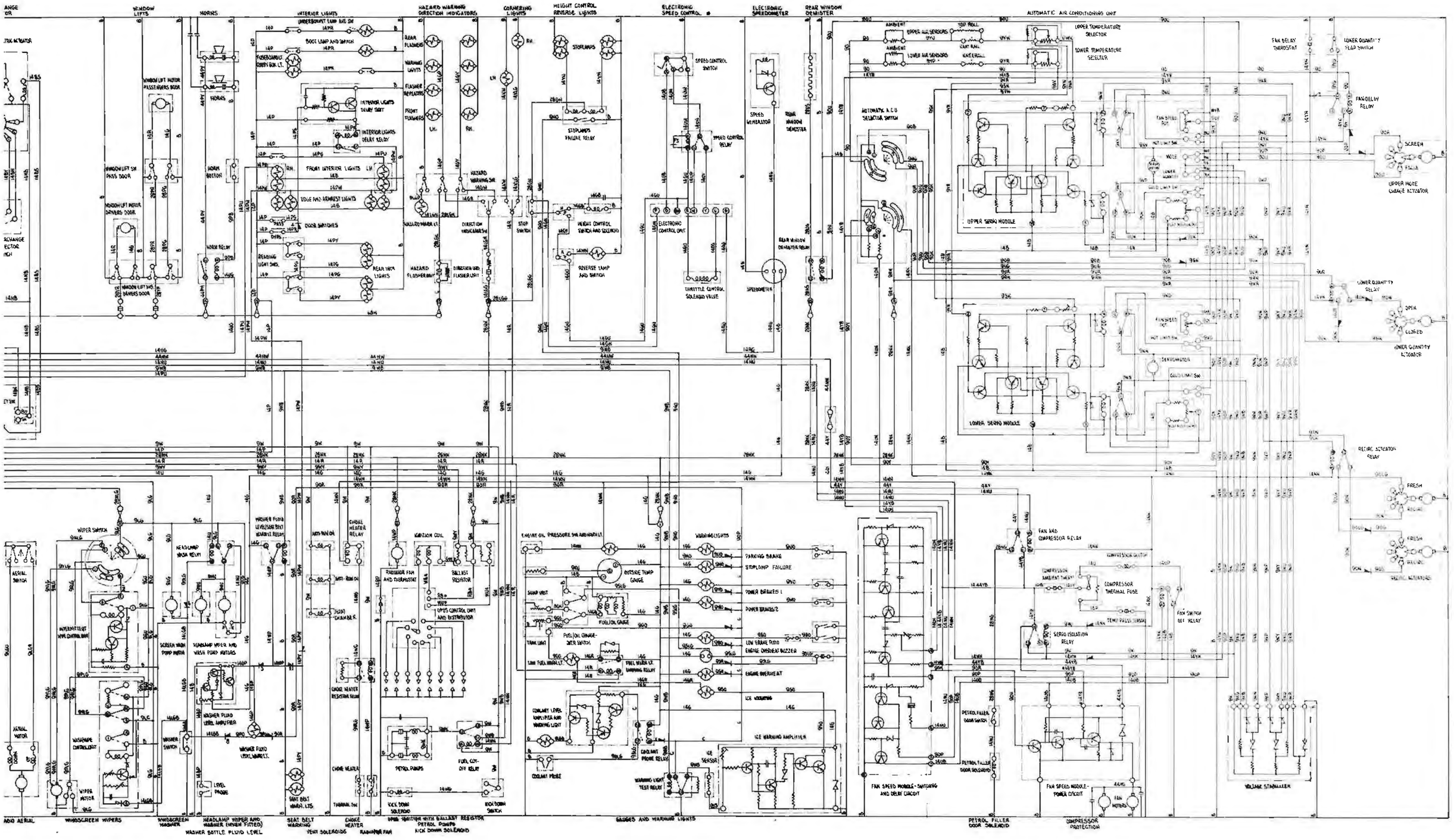
WINDOW LIFTS
HORNS
INTERIOR LIGHTS
HAZARD WARNING DIRECTION INDICATORS
CORNERING LIGHTS
HEIGHT CONTROL REVERSE LIGHTS
ELECTRONIC SPEED CONTROL
ELECTRONIC SPEEDOMETER
REAR WINDOW DEMISTER
AUTOMATIC AIR CONDITIONING UNIT
UPPER TEMPERATURE SELECTOR
LOWER TEMPERATURE SELECTOR
UPPER SERVO MODULE
LOWER SERVO MODULE
FAN DELAY THERMOSTAT
FAN DELAY RELAY
SCREEN
UPPER MODE CHANGE ACTUATOR
LOWER QUANTITY RELAY
OPEN
CLOSED
LOWER QUANTITY ACTUATOR
RECIRC ACTUATOR RELAY
FRESH
RECIRC
RECIRC ACTUATORS
WIPER SWITCH
HEADLAMP WASH RELAY
HEADLAMP WIPER AND WASH PUMP MOTORS
WASHER FLUID LEVEL AMPLIFIER
WASHER FLUID LEVEL WARN LT.
WASHER SWITCH
LEVEL PROBE
SEAT BELT WARN. LTS.
CHOKE HEATER RELAY
CHOKE HEATER
IGNITION COIL
BALLAST RESISTOR
RADIATOR FAN AND THERMOSTAT
PETROL PUMPS
FUEL CUT-OFF RELAY
KICK DOWN SOLENOID
KICK DOWN SWITCH
ENGINE OIL PRESSURE SW AND WARN LT.
OUTSIDE TEMP GAUGE
FUEL/OIL GAUGE
FUEL/OIL CHANGE-OVER SWITCH
FUEL WARN LT. FLASHING RELAY
COOLANT LEVEL AMPLIFIER AND WARNING LIGHT
COOLANT PROBE
COOLANT PROBE RELAY
WARNING LIGHTS
PARKING BRAKE
STOPLAMP FAILURE
POWER BRAKES 1
POWER BRAKES 2
LOW BRAKE FLUID
ENGINE OVERHEAT BUZZER
ENGINE OVERHEAT
ICE WARNING
ICE WARNING AMPLIFIER
ICE SENSOR
WARNING LIGHT TEST RELAY
FAN AND COMPRESSOR RELAY
COMPRESSOR THERMAL FUSE
SERVO ISOLATION RELAY
FAN SWITCH OFF RELAY
FAN SPEED MODULE - SWITCHING AND DELAY CIRCUIT
FAN SPEED MODULE - POWER CIRCUIT
PETROL FILLER DOOR SOLENOID
PETROL FILLER DOOR SWITCH
FAN MOTORS
VOLTAGE STABILIZER
AERIAL SWITCH
AERIAL MOTOR
WINDSCREEN WIPERS
WINDSCREEN WASHER
HEADLAMP WIPER AND WASHER (WHEN FITTED)
WASHER BOTTLE FLUID LEVEL
SEAT BELT WARNING
VENT SOLENOIDS
CHOKE HEATER
RADIATOR FAN
PETROL PUMPS
KICK DOWN SOLENOID
GAUGES AND WARNING LIGHTS
PETROL FILLER DOOR SOLENOID
COMPRESSOR PROTECTION

Theoretical wiring diagram
Sheet 13

Rolls-Royce Camargue

Left-hand drive cars for countries other than USA and Canada from car serial number 30 001

This document is the property of Rolls-Royce Motors Limited and may not be copied or communicated to a third party or used for any purpose other than that for which it is supplied without the express written authority of Rolls-Royce Motors Limited.

Whilst the information in this document is given in good faith based upon the latest knowledge available to Rolls-Royce Motors Limited, Rolls-Royce Motors Limited gives no warranty or representation concerning such information, and such information must not be taken as establishing any contractual or other commitment on the part of Rolls-Royce Motors Limited.

© Rolls-Royce Motors Limited 1978
Printed in England

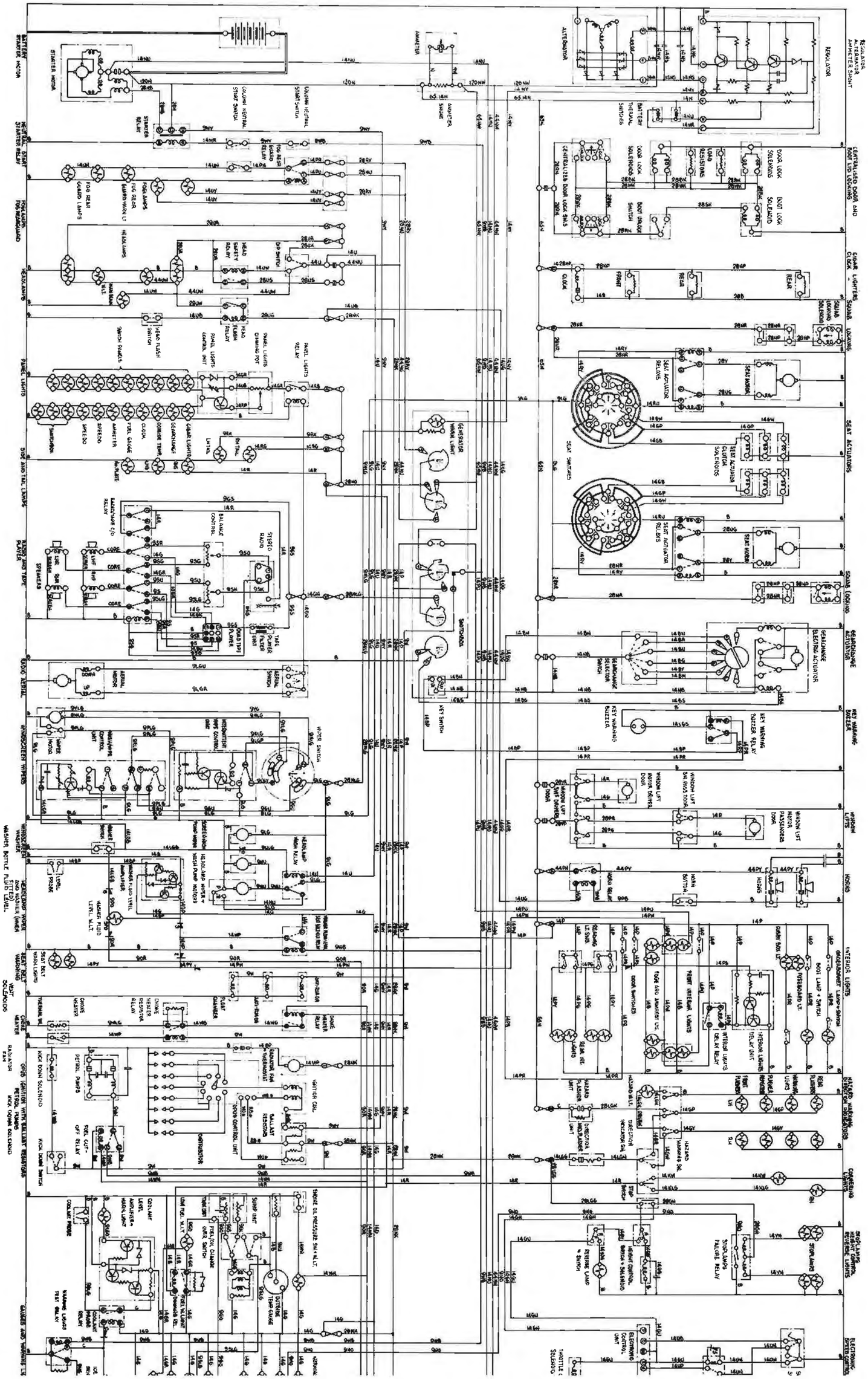
BATTERY
STARTER MOTOR
NEUTRAL START STARTER RELAY
HEADLAMPS
PANEL LIGHTS
SIDE AND TAIL LAMPS
RADIO AND TAPE PLAYER
SLIDING ROOF
WINDSCREEN WIPERS
WINDSCREEN WASHER
HEADLAMP POWER AND WASHER (WHEN
WASHER BOTTLE FLUID LEVEL
SEAT BELT WARNING
HEAT SOLENOIDS
CHOKE HEATER
RADIATOR FAN
DRIVE IGNITION WITH BALLAST RESISTORS
PETROL PUMPS
KICK DOWN SOLENOID
GAUGES AND WARNING LTS
ALTERNATOR
REGULATOR
REGULATOR ALTERNATOR AMMETER SHUNT
AMMETER
BATTERY THERMAL SWITCHES
CENTRALISED DOOR LOCKING AND BOOT LID LOCKING
DOOR LOCK SOLENOIDS
DOOR LOCK LOAD RESISTORS
BOOT LOCK SOLENOID
BOOT OPEN SW.
CLOCK
CIGAR LIGHTERS
SQUAB LOCKING
SEAT ACTUATORS
SEAT ACTUATOR RELAYS
SEAT ACTUATOR CLUTCH SOLENOIDS
SEAT SWITCHES
SEAT HEATERS
GEARCHANGE ELECTRIC ACTUATOR
GEARCHANGE SELECTOR SWITCH
KEY WARNING BUZZER
KEY WARNING BUZZER RELAY
KEY SWITCH
WINDOW LIFTS
WINDOW LIFT MOTOR DRIVERS DOOR
WINDOW LIFT SW. DRIVERS DOOR
WINDOW LIFT MOTOR PASSENGERS DOOR
WINDOW LIFT SW. PASS DOOR
HORNS
HORN RELAY
HORN BUTTON
INTERIOR LIGHTS
GLOVEBOX/MET LAMP + SWITCH
BOOT LAMP + SWITCH
DOOR BOX LT.
DOOR SWITCHES
REAR LT. PANEL LAMP
REAR ARMREST LTS.
FRONT INTERIOR LAMPS
REAR INTERIOR LAMPS
INTERIOR LIGHTS DELAY UNIT
INTERIOR LIGHTS DELAY RELAY
HAZARD WARNING FLASHER UNIT
HAZARD WARN. SW.
DIRECTION INDICATOR SW.
HAZARD WARNING LAMPS
REAR FLASHERS
FRONT FLASHERS LH
FRONT FLASHERS RH
SIDE LAMPS
CORNERING LIGHTS
STOP LAMPS
STOP LAMPS FAILURE RELAY
HEIGHT CONTROL SWITCH + BALANCING
PRESSURE LAMP + SWITCH
ELECTRONIC CONTROL UNIT
THROTTLE SOLENOID
ELECTRONIC SPEED CONTROL
HEADLAMP WIPER MOTORS
WIPER SWITCH
WASHER PUMP MOTORS
WASHER FLUID LEVEL AMPLIFIER
WASHER FLUID LEVEL W.L.T.
WASHER FLUID LEVEL PROBE
HEATED REAR WINDOW RELAY
HEATED REAR WINDOW
DRIVE HEATER RESISTOR RELAY
DRIVE HEATER RELAY
PANEL LIGHTS CONTROL UNIT
PANEL LIGHTS DIMMING POT
PANEL LIGHTS RELAY
HEAD FLASH RELAY
HEAD FLASH SWITCH
HEAD SAFETY RELAY
DIP SWITCH
FOG REAR GUARD LAMPS
FOG REAR BARRIER WARN LT
FOG LAMPS
FOG FRONT GUARD LAMPS
FOG LAMPS RELAY
STARTER RELAY
COLUMN NEUTRAL START SWITCH
MANUAL NEUTRAL START SWITCH
STARTER MOTOR
ALTERNATOR
REGULATOR
AMMETER
AMMETER SHUNT
BATTERY THERMAL SWITCHES
CENTRALISED DOOR LOCK SW.S
DOOR LOCK SOLENOIDS
DOOR LOCK LOAD RESISTORS
BOOT LOCK SOLENOID
BOOT OPEN SWITCH
CLOCK
REAR
FRONT
SQUAB LOCKING SOLENOID
SEAT ACTUATOR RELAYS
SEAT ACTUATOR CLUTCH SOLENOIDS
SEAT SWITCHES
SEAT ACTUATOR RELAYS
SEAT HEATERS
GEARCHANGE ELECTRIC ACTUATOR
GEARCHANGE SELECTOR SWITCH
KEY WARNING BUZZER
KEY WARNING BUZZER RELAY
KEY SWITCH
WINDOW LIFT MOTOR DRIVERS DOOR
WINDOW LIFT SW. DRIVERS DOOR
WINDOW LIFT MOTOR PASSENGERS DOOR
WINDOW LIFT SW. PASS DOOR
HORN RELAY
HORN BUTTON
HORNS
GLOVEBOX/MET LAMP + SWITCH
BOOT LAMP + SWITCH
DOOR BOX LT.
DOOR SWITCHES
REAR LT. PANEL LAMP
REAR ARMREST LTS.
FRONT INTERIOR LAMPS
REAR INTERIOR LAMPS
INTERIOR LIGHTS DELAY UNIT
INTERIOR LIGHTS DELAY RELAY
HAZARD WARNING FLASHER UNIT
HAZARD WARN. SW.
DIRECTION INDICATOR SW.
HAZARD WARNING LAMPS
REAR FLASHERS
FRONT FLASHERS LH
FRONT FLASHERS RH
SIDE LAMPS
CORNERING LIGHTS
STOP LAMPS
STOP LAMPS FAILURE RELAY
HEIGHT CONTROL SWITCH + BALANCING
PRESSURE LAMP + SWITCH
ELECTRONIC CONTROL UNIT
THROTTLE SOLENOID
ELECTRONIC SPEED CONTROL
HEADLAMP WIPER MOTORS
WIPER SWITCH
WASHER PUMP MOTORS
WASHER FLUID LEVEL AMPLIFIER
WASHER FLUID LEVEL W.L.T.
WASHER FLUID LEVEL PROBE
HEATED REAR WINDOW RELAY
HEATED REAR WINDOW
DRIVE HEATER RESISTOR RELAY
DRIVE HEATER RELAY
PANEL LIGHTS CONTROL UNIT
PANEL LIGHTS DIMMING POT
PANEL LIGHTS RELAY
HEAD FLASH RELAY
HEAD FLASH SWITCH
HEAD SAFETY RELAY
DIP SWITCH
FOG REAR GUARD LAMPS
FOG REAR BARRIER WARN LT
FOG LAMPS
FOG FRONT GUARD LAMPS
FOG LAMPS RELAY
STARTER RELAY
COLUMN NEUTRAL START SWITCH
MANUAL NEUTRAL START SWITCH
STARTER MOTOR
SPEEDO
AMMETER
FUEL GAUGE
CLOCK
GEARCHANGE
GEARCHANGE LIGHTS
DOOR
TRIP
SPEEDO
TEMP
FUEL
CLOCK
AMMETER

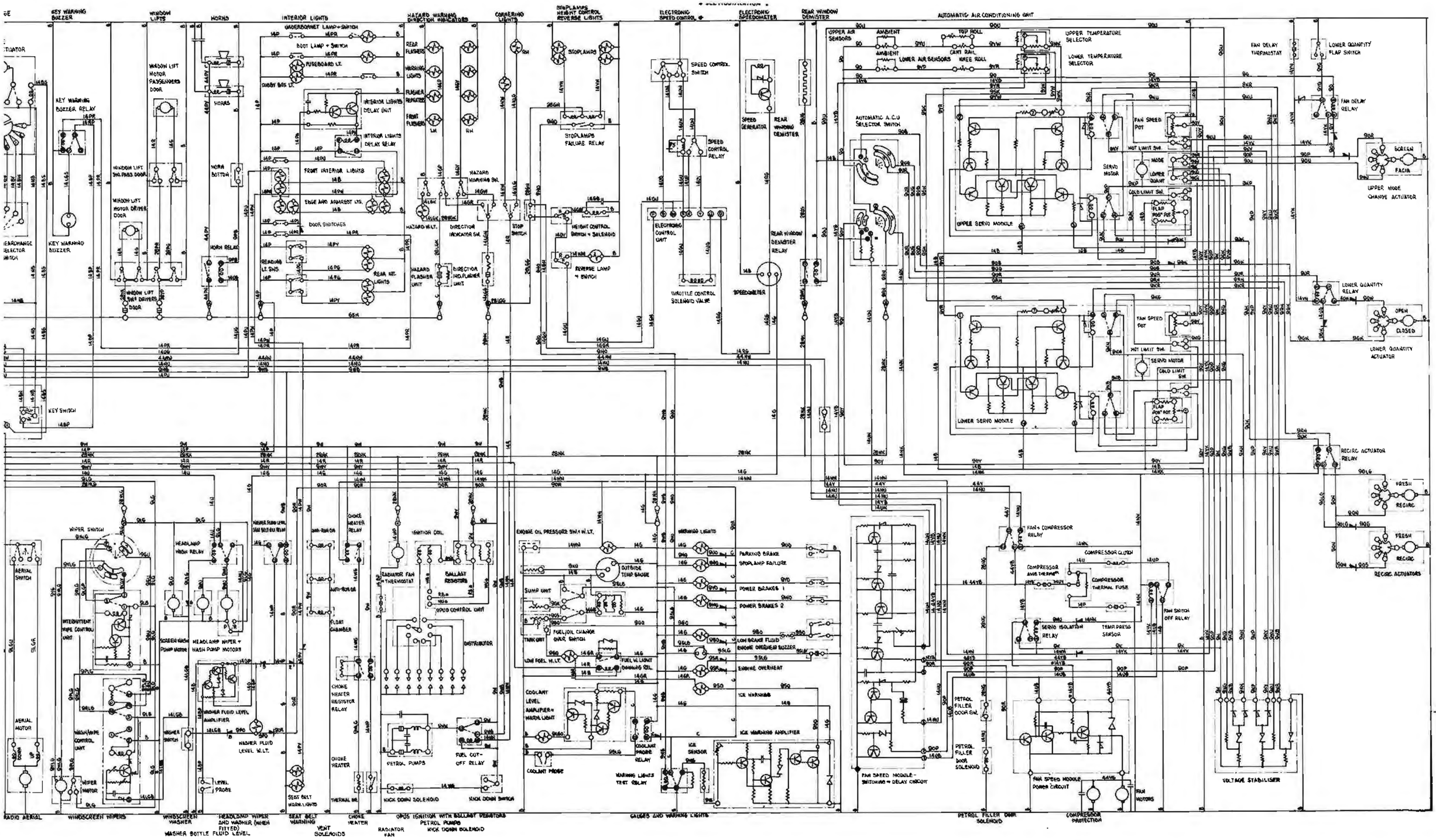
KEY WARNING BUZZER
WINDOW LIFTS
HORNS
INTERIOR LIGHTS
UNDERBONNET LAMP + SWITCH
BOOT LAMP + SWITCH
FUSEBOARD LT.
COUPE BOX LT.
INTERIOR LIGHTS DELAY UNIT
INTERIOR LIGHTS DELAY RELAY
FRONT INTERIOR LIGHTS
EDGE AND ARMREST LTS.
DOOR SWITCHES
READING LT. SWS.
REAR INT. LIGHTS
HAZARD WARNING DIRECTION INDICATORS
REAR FLASHERS
WARNING LIGHTS
FLASHER REPEATERS
FRONT FLASHERS
HAZARD WARNING SW.
HAZARD W.LT.
DIRECTION INDICATOR SW.
HAZARD FLASHER UNIT
DIRECTOR IND./FLASHER UNIT
CORNERING LIGHTS
STOP SWITCH
STOPLAMPS HEIGHT CONTROL REVERSE LIGHTS
STOPLAMPS
STOPLAMPS FAILURE RELAY
HEIGHT CONTROL SWITCH + SOLENOID
REVERSE LAMP + SWITCH
ELECTRONIC SPEED CONTROL
SPEED CONTROL SWITCH
SPEED CONTROL RELAY
ELECTRONIC CONTROL UNIT
THROTTLE CONTROL SOLENOID VALVE
ELECTRONIC SPEEDOMETER
SPEED GENERATOR
SPEEDOMETER
REAR WINDOW DEMISTER
REAR WINDOW DEMISTER RELAY
AUTOMATIC AIR CONDITIONING UNIT
UPPER AIR SENSORS
AMBIENT
TOP ROLL
CANT RAIL
KNEE ROLL
LOWER AIR SENSORS
UPPER TEMPERATURE SELECTOR
LOWER TEMPERATURE SELECTOR
AUTOMATIC A.C.U. SELECTOR SWITCH
FAN SPEED POT
HOT LIMIT SW.
SERVO MOTOR
COLD LIMIT SW.
FLAP POT
UPPER SERVO MODULE
LOWER SERVO MODULE
FAN DELAY THERMOSTAT
FAN DELAY RELAY
LOWER QUANTITY FLAP SWITCH
SCREEN
FACIA
UPPER MODE CHANGE ACTUATOR
LOWER QUANTITY RELAY
OPEN
CLOSED
LOWER QUANTITY ACTUATOR
RECIRC ACTUATOR RELAY
FRESH
RECIRC
RECIRC ACTUATORS
FAN + COMPRESSOR RELAY
COMPRESSOR CLUTCH
COMPRESSOR AMB THERM.
COMPRESSOR THERMAL FUSE
SERVO ISOLATION RELAY
TEMP. PRESS SENSOR
FAN SWITCH OFF RELAY
FAN SPEED MODULE - SWITCHING + DELAY CIRCUIT
FAN SPEED MODULE POWER CIRCUIT
FAN MOTORS
VOLTAGE STABILISER
COMPRESSOR PROTECTION
PETROL FILLER DOOR SW.
PETROL FILLER DOOR SOLENOID
KEY SWITCH
KEY WARNING BUZZER RELAY
KEY WARNING BUZZER
WINDOW LIFT MOTOR PASSENGERS DOOR
WINDOW LIFT SWS. PASS. DOOR
WINDOW LIFT MOTOR DRIVERS DOOR
WINDOW LIFT SWS. DRIVERS DOOR
HORN BUTTON
HORN RELAY
HORNS
RADIO AERIAL
AERIAL SWITCH
AERIAL MOTOR
WINDSCREEN WIPERS
WIPER SWITCH
INTERMITTENT WIPE CONTROL UNIT
WASH/WIPE CONTROL UNIT
WIPER MOTOR
WINDSCREEN WASHER
SCREEN WASH PUMP MOTOR
WASHER SWITCH
WASHER BOTTLE FLUID LEVEL
HEADLAMP WIPER AND WASHER (WHEN FITTED)
HEADLAMP WIPER + WASH PUMP MOTORS
HEADLAMP WASH RELAY
WASHER FLUID LEVEL AMPLIFIER
WASHER FLUID LEVEL W.LT.
LEVEL PROBE
SEAT BELT WARNING
SEAT BELT WARN. LIGHTS
VENT SOLENOIDS
CHOKE HEATER
CHOKE HEATER RELAY
CHOKE HEATER RESISTOR RELAY
CHOKE HEATER
THERMAL SW.
RADIATOR FAN
RADIATOR FAN THERMOSTAT
OPUS IGNITION WITH BALLAST RESISTORS
IGNITION COIL
BALLAST RESISTORS
OPUS CONTROL UNIT
DISTRIBUTOR
PETROL PUMPS
PETROL PUMPS
KICK DOWN SOLENOID
KICK DOWN SWITCH
FUEL CUT-OFF RELAY
KICK DOWN SOLENOID
ENGINE OIL PRESSURE SW.+ W.LT.
SUMP UNIT
OUTSIDE TEMP. GAUGE
FUEL/OIL CHANGE OVER SWITCH
TANK UNIT
LOW FUEL W.LT.
FUEL W.LIGHT DIMMING COIL
COOLANT LEVEL AMPLIFIER + WARN. LIGHT
COOLANT PROBE
COOLANT PROBE RELAY
WARNING LIGHTS TEST RELAY
ICE SENSOR
ICE WARNING AMPLIFIER
WARNING LIGHTS
PARKING BRAKE + STOPLAMP FAILURE
POWER BRAKES 1
POWER BRAKES 2
LOW BRAKE FLUID + ENGINE OVERHEAT BUZZER
ENGINE OVERHEAT
ICE WARNING
GAUGES AND WARNING LIGHTS

Theoretical wiring diagram
Sheet 14

Rolls-Royce Camargue

Left-hand drive cars for USA and Canada
from car serial number 30 001

This document is the property of Rolls-Royce Motors Limited and may not be copied or communicated to a third party or used for any purpose other than that for which it is supplied without the express written authority of Rolls-Royce Motors Limited.

Whilst the information in this document is given in good faith based upon the latest knowledge available to Rolls-Royce Motors Limited, Rolls-Royce Motors Limited gives no warranty or representation concerning such information, and such information must not be taken as establishing any contractual or other commitment on the part of Rolls-Royce Motors Limited.

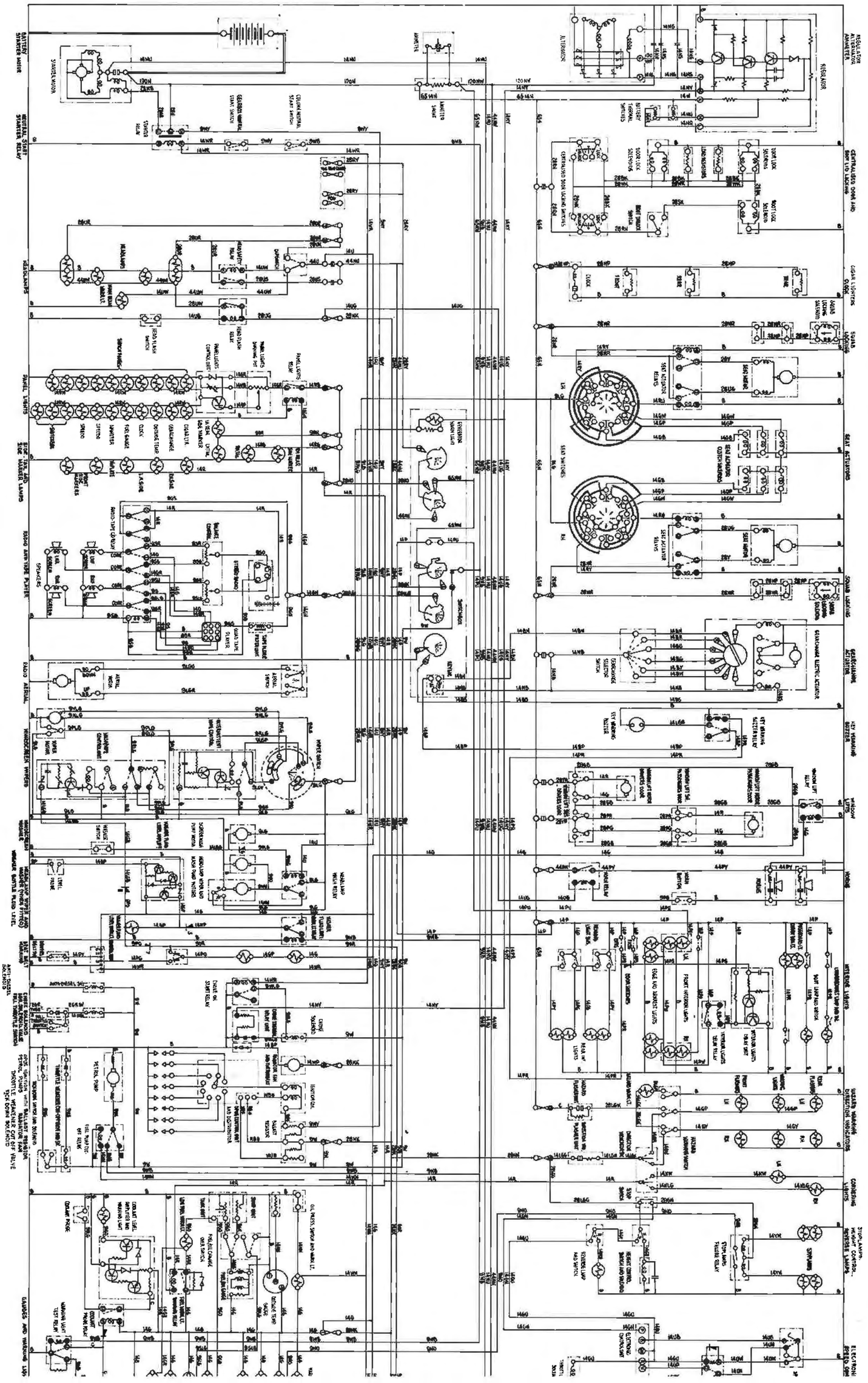

* SEE MODIFICATION 1

GEARCHANGE ACTUATOR
KEY WARNING BUZZER
WINDOW LIFTS
HORNS
INTERIOR LIGHTS
HAZARD WARNING DIRECTION INDICATORS
CORNERING LIGHTS
STOPLAMPS-WEIGHT CONTROL, REVERSE LAMPS
ELECTRONIC SPEED CONTROL *
ELECTRONIC SPEEDOMETER
REAR WINDOW DEMISTER
AUTOMATIC AIR CONDITIONING UNIT

RADIO AERIAL
WINDSCREEN WIPERS
WINDSCREEN WASHER
HEADLAMP WIPER AND WASHER (WHEN FITTED)
WASHER BOTTLE PLUS LEVEL
SEAT BELT WARNING
ANTI-DIESEL SOLENOID
SMOKE SOLENOID
DSR SOLENOID VALVE
FULL THROTTLE SWITCH
OPUS IGNITION WITH BALLAST RESISTOR
PETROL PUMPS
RADIATOR FAN
THROTTLE WEAKENER CUT OFF VALVE
KICK DOWN SOLENOID
GAUGES AND WARNING LIGHTS
PETROL FILLER DOOR SOLENOID

Theoretical wiring diagram

Sheet 15

Rolls-Royce Silver Shadow II
Bentley T2
Rolls-Royce Silver Wraith II

1980 model year cars for California

This wiring diagram can also be used with regard to the fuel injection system for Corniche and Camargue cars built to the 1980 Californian specification.

For items other than those concerning the fuel injection system refer to sheets 10, 11 and 14 respectively.

This document is the property of Rolls-Royce Motors Limited and may not be copied or communicated to a third party or used for any purpose other than that for which it is supplied without the express written authority of Rolls-Royce Motors Limited.

Whilst the information in this document is given in good faith based upon the latest knowledge available to Rolls-Royce Motors Limited, Rolls-Royce Motors Limited gives no warranty or representation concerning such information, and such information must not be taken as establishing any contractual or other commitment on the part of Rolls-Royce Motors Limited.

 © Rolls-Royce Motors Limited 1980

Battery
Ammeter
Starter
Headlamps
Panel lamps
Side and tail lamps
Radio/Tape player
Aerial
Windscreen wipers & washer
Headlamp wash/wipe
Ignition
Fuel injection
Kick down
Seat belts warning
Horns
Cigarette lighter
Window lifts
Regulator
Alternator
Battery
Solenoid
Starter motor
Starter relay
Ammeter shunt
Battery temperature sensors
Neutral start switch (column)
Neutral start switch (gearbox)
Headlamps
Main beam W.I.T.
Dipswitch
Head safety relay
Headlamp flash relay
Switch panel
Switchbox
Panel lamps relay
Panel lamps dimming potentiometer
Generator warning light
Lighting
Clock
Cigar lighter
Speedo
4 in 1 instrument
Tachometer
Trip
Fuel
Outside temp. gauge
Panel lamps dimming unit
Tail lamps
Number plate lamps
Rear side marker lamps
Front side marker lamps
Sidelamps
Radio/tape changeover relay
Radio
Fuse
Aerial relay
Heater fan relay
Tape player
Automatic control
Speakers
Balance control
Tape player filter
Ignition
Key switch
Ignition coil
Ignition distributor
Spark plugs
Air diverter valve
Thermo switch
Throttle pot
Air sensor
Heater regulator
Heater
Engine running sensor
Closed loop control valve
Aux air valve/heater
Fuel pump
Fuel pump start relay
Kick down switch & solenoid
Seat belt switch
Seat belt warning lamp
Fastened seat belt warning control unit
Seat belt warning control
Pump unit
Coolant temp. trans.
Oil pressure sw. & unit
Fuel/oil cooler sw.
Transmission temp. sensor
Coolant temp. sensor
Coolant warning lt. & amplifier
Brake fluid level sw.
Brake fluid level warning lamp
Brake pressure relay
Brake pressure sw.
Brake fluid level sensor
Brake fluid level amplifier
Brake pressure warning lamp
Brake pressure sensor
Brake pressure

Horns

Gearchange

Window lifts

Seat belt release switches

Interior lights

Direction indicators
Hazard warning
Reverse lights

Stoplamps
Speedcontrol

Rear window demister

Automatic air conditioning unit

Horns

Horn button

Gearchange actuator

E.G.C. selector switch

E.G.C. cut-out

P.M. window lift motor

Electric window lift switch (L.H. rear)

P.M. window lift motor

Electric window lift switch (R.H. rear)

Window lift relay

P.M. motor drivers door

Electric window lift master switch

P.M. motor passenger door

Electric window lift sw's

Electric window lift sw.

Electric window lift cut-outs

Seat belt release warning lamp

Interior lights delay unit

Underbonnet lamp & switch

Luggage compartment lamp & switch

Stowage compartment lamp & sw.

Fuseboard lamp & switch

Front int lights

Interior lights relay

Door sw's

Edge lights

Rear interior light & sw.

Rear interior lights & sw.

Warning lights

Passenger int light switch

Front interior lights

Rear Flashers

Repeat

Front Flashers

D.I. switch

D.I. flasher unit

Hazard flasher unit

Stoplamps

Stoplamps failure relay

Stoplamps switch

Reverse lamp & sw.

Speed control unit

Speed control relay

Electronic control unit

Safety relay

TCS sol valve

TCS switch

Rear window demister

Rear window demister relay

Ambient

Saloon

Upper air sensors

Top roll

Lower air sensors

Upper temperature selector

Lower temperature selector

Auto air conditioning unit selector switch

Upper servo module

Fan speed pot

Servo motor

Flap limit

Mode

L.Q.

Cold limit

Flap position potentiometer

Lower servo module

Fan speed pot

Servo motor

Cold limit

Flap posn potentiometer

Fan delay thermostat

Fan delay relay

Lower quantity flap switch

Upper mode change actuator

Screen

Facia

Mode change relay & switch

Lower quantity relay

Lower quantity actuator

Open

Closed

Fresh L.H.

Recirc

Fresh R.H.

Recirc

Recirc relay

Recirc actuators

Ignition

Key switch

Key warning buzzer & relay

Radio

Fuse

Aerial relay

Balance control

Speakers

Tape player filter

Tape player

Automatic aerial

Washer fluid relay

Wiper switch

Electronic control unit

Relays

Wash switch

Wash pump motor

Wiper motor

Engine cooling fan & switch

Headlamp wash relay

Headlamp wash pump & wiper motor

Ignition distributor

Ignition coil

Spark plugs

Air drive tap sol valve

Engine running sensor

Closed loop control valve

Aux air valve heater

Throttle pos'r switch

Warm up regulator heater

X Sensor

Electronic control unit

Kick down switch & solenoid

Auxiliary start relay

Fuel pump

Pi relay

Seat belt switch

Fusion seat belt warning lamp

Seat belt warning control

Oil pressure sw. & w.lt.

Temp gauge

Coolant temp trans.

Sump unit

Fuel/oil gauge

Fuel/oil c/o sw.

Oil pressure transmitter

Oil pressure gauge

Outside temp gauge

Outside temp sond

Coolant warning lt. & amplifier

Probe Relay

Washer fluid w.lt. & amplifier

Probe

Message counter

Oxygen sensor

Parking brake

Stoplamp failure

Brake pressure

Brake pressure

Brake fluid

Engine overheat

Warning lights

Engine overheat buzzer

Warning light dim. relay

Low fuel

Ice warning light

Ice sensor

Warning lights test relay

Ice warning amplifier

Fan & comp fuse

Speedometer

Speed generator

Petrol filler door solenoid & switch

Fan & comp relay

Temp pressure sensor

Compressor ambient thermostat

Comp protection unit

Comp clutch

Servo isolation relay

Fan switch off relay

Voltage stabilizer

Fan speed module

Fan speed power circuit

Fan motors

Low impedance

Test points marked thus

* 14 YB - Fit red identification sleeve

Radio/Tape player

Aerial

Windscreen wipers & washer

Headlamp wash/wipe

Ignition
Fuel injection

Kick down

Seat belts warning

Gauges & Warning lights

Electronic speedometer

Petrol filler door

KEY TO SOLENOIDS & VALVES	
1 Thermal time switch	5 E.G.R. temp switch
2 Cold start valve	6 Coolant temp switch
3 Vacuum retard solenoid valve	7 Oil temp switch
4 E.G.R. control solenoid valve	

Section VI

Supplement number 1

Applicable to all cars from car serial numbers

Silver Shadow II	-	SRX 34573
Silver Wraith II	-	LRG 34601
Bentley T2	-	SBH 34775
Corniche Saloon	-	CRH 34830
Corniche Convertible	-	DRX 33029

The following circuits are affected

	Sheet
Petrol pumps	1
Radio and aerial	1
Washer fluid level warning lamp	1
A.C.U. facia override switch	1
Charging system	1
Headlamps and foglamps	2, 3 and 4

For all other circuits refer to the appropriate wiring diagram in Section VI.

Printed in England

© Rolls-Royce Motors Limited 1980

May 1980

T.S.D. 4200

Section VI

Supplement number 1

Sheet 1

Applicable to all cars from car serial numbers

Silver Shadow II	-	SRX 34573
Silver Wraith II	-	LRG 34601
Bentley T2	-	SBH 34775
Corniche Saloon	-	CRH 34830
Corniche Convertible	-	DRX 33029

Petrol pump

Radio and aerial

Washer fluid level warning lamp

A.C.U. facia override switch

Charging system

Printed in England

© Rolls-Royce Motors Limited 1980

TSD 4200 May 1980

Printed in England
© Rolls-Royce Motors Limited 1980

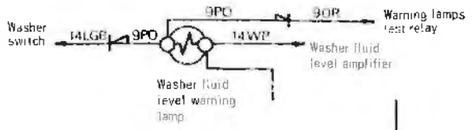

Washer fluid level warning lamp T662

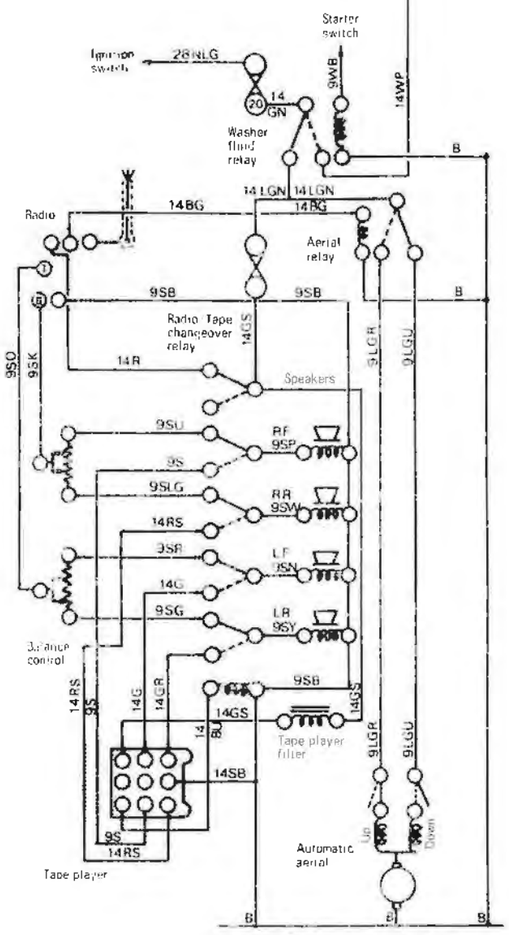

Radio, aerial and tape player T661

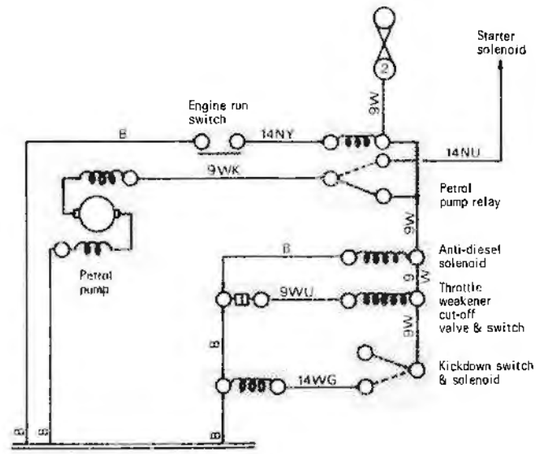

Petrol pump T663

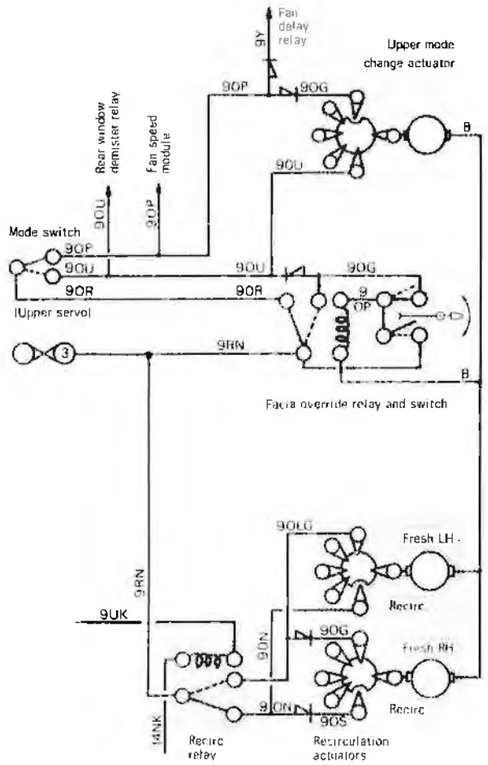

Facia override switch and relay T664

Charging System U933

Section VI

Supplement number 1

Sheet 2

Applicable to right-hand drive cars from car serial numbers

Silver Shadow II	-	SRX 34573
Silver Wraith II	-	LRG 34601
Bentley T2	-	SBH 34775
Corniche Saloon	-	CRH 34830
Corniche Convertible	-	DRX 33029

Headlamps and foglamps

Printed in England

© Rolls-Royce Motors Limited 1978

December 1978

T.S.D. 4200

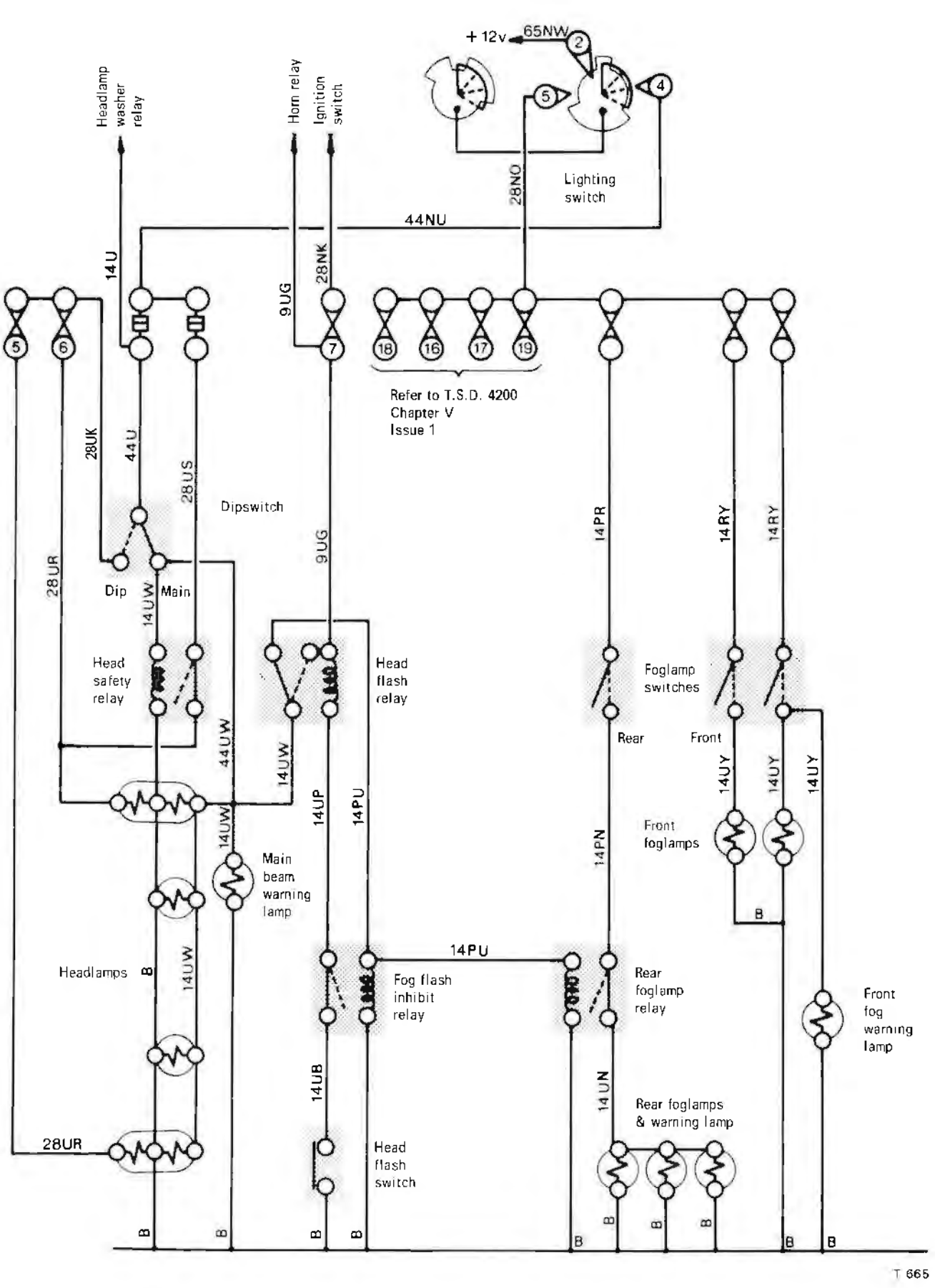
+ 12v
65NW
2
5
4
Lighting switch
28NO
44NU
Headlamp washer relay
Horn relay
Ignition switch
14U
9UG
28NK
5
6
7
18
16
17
19
Refer to T.S.D. 4200
Chapter V
Issue 1
28UK
44U
28US
Dipswitch
9UG
14PR
14RY
14RY
28UR
Dip
Main
14UW
Head safety relay
Head flash relay
Foglamp switches
Rear
Front
44UW
14UW
14UP
14PU
14UY
14UY
14UY
14PN
Front foglamps
14UW
Main beam warning lamp
B
Headlamps
B
14UW
14PU
Fog flash inhibit relay
Rear foglamp relay
Front fog warning lamp
14UB
14UN
Rear foglamps & warning lamp
28UR
Head flash switch
B
B
B
B
B
B
B
B
B
T 665

Section VI

Supplement number 1

Sheet 3

Applicable to left-hand drive cars for countries other than Canada and U.S.A. from car serial numbers

Silver Shadow II	-	SRX 34573
Silver Wraith II	-	LRG 34601
Bentley T2	-	SBH 34775
Corniche Saloon	-	CRH 34830
Corniche Convertible	-	DRX 33029

Headlamps and foglamps

Printed in England

© Rolls-Royce Motors Limited 1978

December 1978

T.S.D. 4200

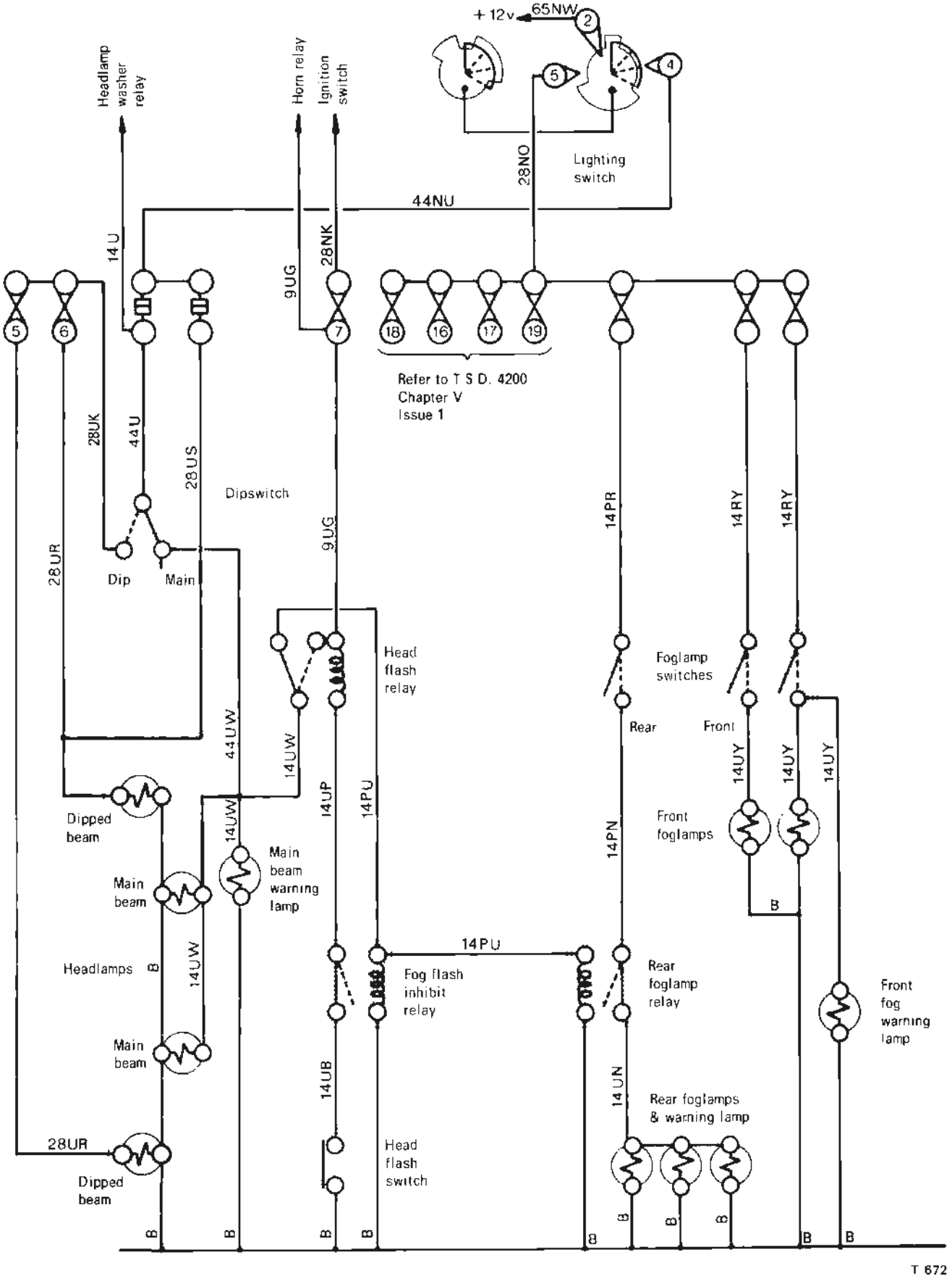
+ 12v
65NW
2
5
4
Lighting switch
28NO
44NU
Headlamp washer relay
Horn relay
Ignition switch
14U
9UG
28NK
5
6
7
18
16
17
19
Refer to T S D. 4200
Chapter V
Issue 1
28UK
44U
28US
Dipswitch
28UR
Dip
Main
9UG
14PR
14RY
14RY
Head flash relay
Foglamp switches
Rear
Front
44UW
14UW
14UP
14PU
14UY
14UY
14UY
Dipped beam
14UW
Main beam warning lamp
Front foglamps
Main beam
14PN
B
14PU
Headlamps
B
14UW
Fog flash inhibit relay
Rear foglamp relay
Front fog warning lamp
Main beam
14UB
14UN
Rear foglamps & warning lamp
28UR
Head flash switch
Dipped beam
B
B
B
B
B
B
B
B
B
T 672

Section VI

Supplement number 1

Sheet 4

Applicable to left-hand drive cars for Canada and U.S.A. from car serial numbers

Silver Shadow II	-	SRX 34573
Silver Wraith II	-	LRG 34601
Bentley T2	-	SBH 34775
Corniche Saloon	-	CRH 34830
Corniche Convertible	-	DRX 33029

Headlamps

Printed in England

© Rolls-Royce Motors Limited 1978

December 1978

T.S.D. 4200

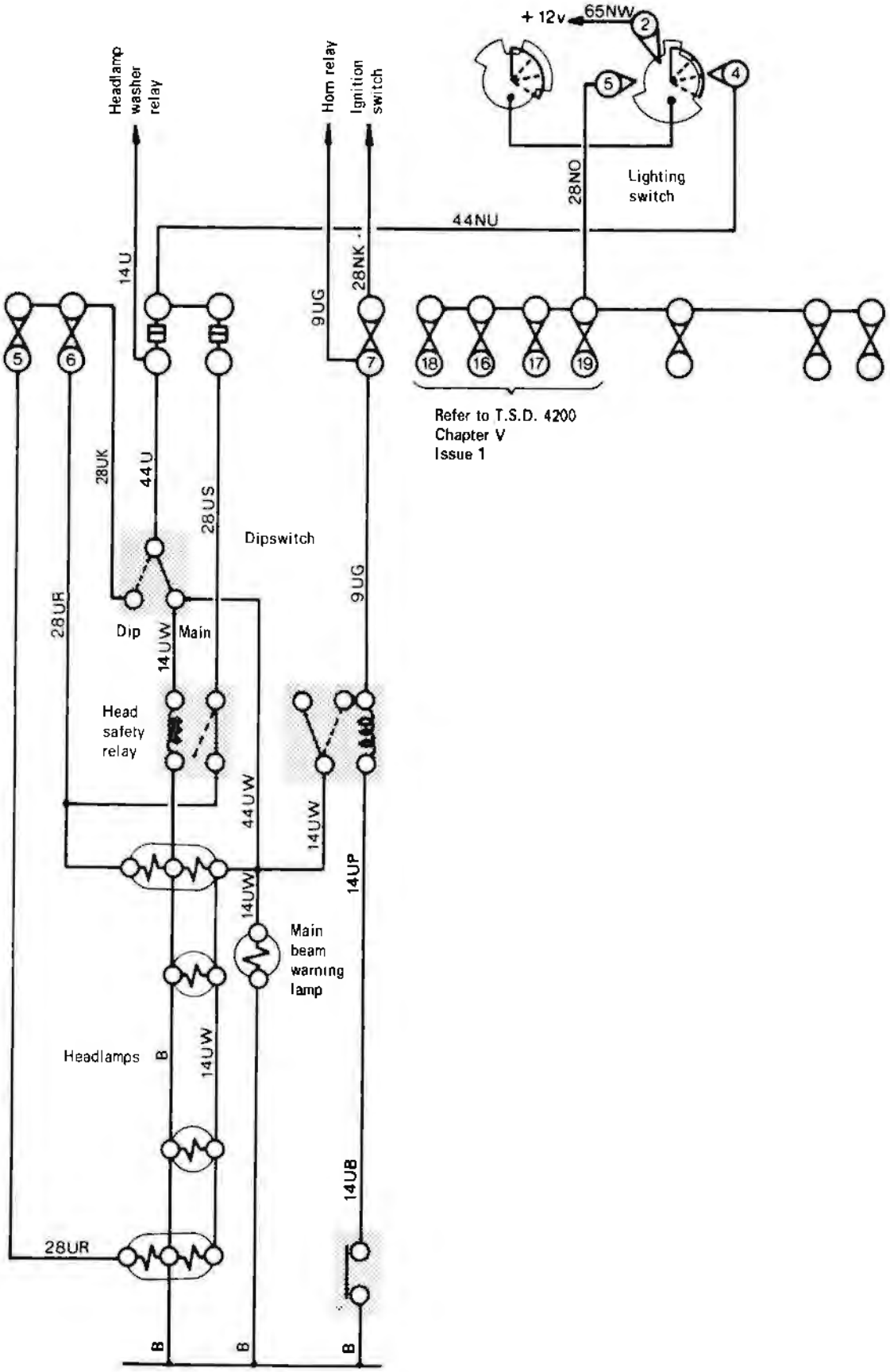
+ 12v
65NW
2
5
4
Lighting switch
28NO
44NU
Headlamp washer relay
Horn relay
Ignition switch
14U
9UG
28NK
5
6
7
18
16
17
19
Refer to T.S.D. 4200
Chapter V
Issue 1
28UK
44U
28US
Dipswitch
9UG
28UR
Dip
Main
14UW
Head safety relay
44UW
14UW
14UP
14UW
Main beam warning lamp
Headlamps
B
14UW
14UB
28UR
B
B
B

T 666